ENGINEERING
TOMORROW

Quick reference

Danfoss scroll compressors
SM SY SZ

R407C - R134a - R22 - 60 Hz

http://cc.danfoss.com

Quick reference

Product range single compressors

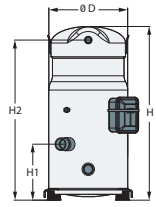

	D	H	H1	H2
S084-090-100	254	508	142	465
S110-120	254	558	178	515

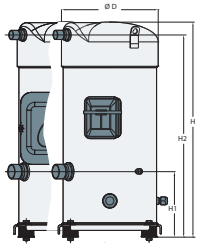

	D	H	H1	H2
S148-161	266	591	180	556

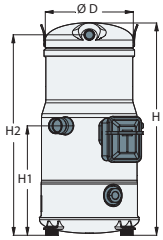

	D	H	H1	H2
S112	243	535	278	504
S124-147	243	540	278	509

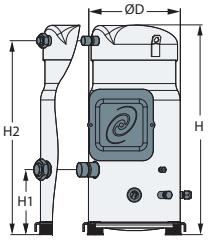

	D	H	H1	H2
S175-185	316	678	180	641

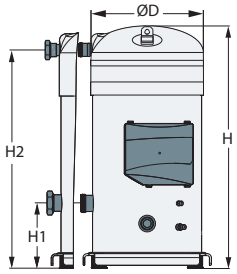

	D	H	H1	H2
S240	344	727	196	654
S300	344	738	196	665
S380	344	762	196	689

All dimensions in mm

Model	Motor voltage code			
	200-230V/3/60Hz	400V/3/50Hz - 460V/3/60Hz	500/3/50Hz - 575/3/60Hz	380/3/60Hz
	3	4	7	9
SM/SZ084-090-100-110-120	●	●	●	
SM/SZ148-161	●	●	●	
SM112-124-147	●	●		
SM/SZ175-185	○ ●	○ ●	○ ●	
SY185		○ ●		
SY/SZ240-300	○ ●	○ ●	○ ●	○ ●
SY/SZ380		●		●

○ Rotolock version ● Brazed version

Technical specifications

	Model	Nominal tons 60 Hz	Nominal cooling capacity ①		Power input ①	Max. opera-ting current	COP ①	E.E.R. ①	Sound power	Swept volume	Displacement ③	Oil charge	Net weight ④
		TR	W	Btu/h	kW	A ②	W/W	Btu/h/W	dB(A)	cm^3/rev	m^3/h	dm^3	kg
R22	SM084	7	24600	84000	7.40	17	3.34	11.4	74	114.5	24.1	3.25	64
	SM090	7.5	26400	90100	7.80	17	3.37	11.5	75.	120.5	25.3	3.25	65
	SM100	8	27500	93900	8.10	18	3.38	11.5	75	127.2	26.7	3.25	65
	SM110	9	31600	107800	9.30	20	3.38	11.5	78	144.2	30.3	3.25	73
	SM112	9.5	34000	116000	9.60	21	3.53	12.1	78	151.5	31.8	3.30	64
	SM120	10	36 700	125 300	10.80	24	3.40	11.6	78	166.6	35.0	3.25	73
	SM124	10.5	37 700	128 700	10.60	23	3.56	12.2	77	169.5	35.6	3.30	64
	SM147	12	43 600	148 800	12.20	26	3.58	12.2	78	193.5	40.6	3.30	67
	SM148	12	43 800	149 500	13.00	29	3.37	11.5	83	199.0	41.8	3.60	88
	SM161	13	47 600	162500	14.10	31	3.39	11.6	84	216.6	45.5	3.60	88
	SM175	14	51 100	174 400	15.30	34	3.34	11.4	82.5	233.0	48.9	6.20	100
	SM/SY185	15	55 300	188 700	16.30	35	3.39	11.6	82.5	249.9	52.5	6.20	100
	SY240	20	74 100	252 900	22.10	47	3.35	11.4	85	347.8	73.0	8.00	150
	SY300	25	94 500	322 500	27.50	58	3.43	11.7	86	437.5	91.9	8.00	157
	SY380	30	115 300	393500	33.40	69	3.46	11.8	92	531.2	111.6	8.40	158
R407C	SZ084	7	22 500	76 800	7.10	17	3.19	10.9	74	114.5	24.1	3.25	64
	SZ090	7.5	24 400	83 300	7.60	17	3.20	10.9	77	120.5	25.3	3.25	65
	SZ100	8	26 500	90 400	8.20	18	3.24	11.1	77	127.2	26.7	3.25	65
	SZ110	9	30 100	102 700	9.30	20	3.24	11.1	81	144.2	30.3	3.25	73
	SZ120	10	34800	118800	10.70	24	3.24	11.1	81	166.6	35.0	3.25	73
	SZ148	12	42 600	145 400	13.30	29	3.19	10.9	83	199.0	41.8	3.60	88
	SZ161	13	46 000	157 000	14.30	31	3.21	11.0	83	216.6	45.5	3.60	88
	SZ175	14	48 700	166 200	15.30	34	3.19	10.9	84	233.0	48.9	6.20	100
	SZ185	15	51 800	176 800	16.40	35	3.15	10.8	84	249.9	52.5	6.20	100
	SZ240	20	71 100	242 700	22.70	47	3.14	10.7	87	347.8	73.0	8.00	150
	SZ300	25	87 900	300 000	27.50	58	3.20	10.9	87.5	437.5	91.9	8.00	157
	SZ380	30	107 300	366 200	33.50	69	3.20	10.9	91	531.2	111.6	8.40	158

① at ARI standard rating conditions: 7.2°C evaporating temperature, 54.4°C condensing temperature, 8.3 K subcooling, 11.1 K superheat
② for +15°C evap. temp.; +68°C cond. temp. under nominal voltage 460V/3/60Hz, -10%
③ displacement at nominal speed: 3500 rpm at 60 Hz
④ net weight with oil charge

TR = Ton of Refrigeration
COP = Coefficient Of Performance
EER = Energy Efficiency Ratio

Quick reference

Product range tandem compressors

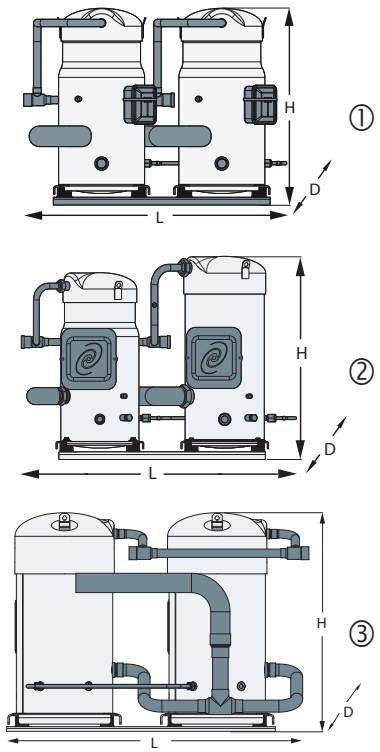

Outline n°	Model	Composition	Voltage code 3 200-230V/3/60	Voltage code 4 400V/3/50Hz 460V/3/60Hz	Voltage code 7 500V/3/50Hz 575V/3/60Hz	Voltage code 9 380V/3/60Hz	Dimensions (mm) L	D	H
①	SM/SZ170	S084 + S084	●	●	●	●	757	432	532
	SM/SZ180	S090 + S090	●	●	●	●	757	432	532
	SM/SZ200	S100 + S100	●	●	●	●	757	432	532
	SM/SZ220	S110 + S110	●	●	●	●	777	443	582
	SM/SZ242	S120 + S120	●	●	●	●	777	443	582
	SM248	S124 + S124	○	○	○	○	844	445	564
	SM272	S124 + S147	○	○	○	○	844	445	564
	SM294	S147 + S147	○	○	○	○	844	445	564
	SM/SZ296	S148 + S148	●	●	●	●	924	438	614
	SM/SZ322	S161 + S161	●	●	●	●	924	438	614
	SM/SZ350	S175 + S175	●	●	●	●	1004	495	717
	SM/SZ370	S185 + S185	●	●	●	●	1004	495	717
②	SM/SZ268	S148 + S120	●	●	●	●	930	441	614
	SM/SZ271	S161 + S110	●	●	●	●	930	441	614
	SM/SZ281	S161 + S120	●	●	●	●	930	441	614
	SY/SZ425	S240 + S185	○	○	○	○	1029	552	729
	SY/SZ485	S300 + S185	○	○	○	○	1029	552	740
③	SY/SZ482	S240 + S240	○	○	○	○	984	510	730
	SY/SZ540	S300 + S240	○	○	○	○	984	510	740
	SY/SZ600	S300 + S300	○	○	○	○	984	510	740
	SZ620	S240 + S380	○	○	○	○	1058	595	770
	SZ680	S300 + S380	○	○	○	○	1058	595	770
	SZ760	S380 + S380	○	○	○	○	1063	595	770

● Factory built tandems
○ Tandems to be achieved by assembly of individual compressors. Specific outline drawings of tandems, trio and quadro units are available, refer to FRCC.PC.005.

Nameplate reference

Family, lubricant & refrigerant	Nominal capacity		Voltage	Version	Evolution index	
SZ	**185**	**-**	**4**	**R**	**C**	Single compressors
SY	**300**	**A**	**7**	**CA**	**A**	Single compressors

Family, lubricant & refrigerant
SM: Scroll, Mineral oil, R22/R417A*
SY: Scroll, POE lubricant, R22/R417A (and R407C for SY185-240-300)
SZ: Scroll, POE lubricant, R407C - R134a (and R404A, R507A for SZ084 to SZ185)

Nominal capacity
in thousand Btu/h at 60 Hz, R22, ARI conditions

Motor voltage code
3: 200-230V/3~/60 Hz
4: 380-400V/3~/50 - 460V/3~/60 Hz
380-415V/3~/50 - 460V/3~/60 Hz**
6: 230V/3~/50 Hz
7: 500V/3~/50 Hz - 575V/3~/60 Hz
9: 380V/3~/60 Hz
380-400V/3~/60Hz**

Motor protection type		Connection	Module voltage	Applies to
Internal overload protector	**V**	: brazed		S 084-090-100-110-120-148-161
	A	: brazed		S 112-124-147
Internal thermostat	**C**	: brazed		S 175-185
	R	: rotolock		
Electronic protection module	**P**	: brazed	24 V AC	
	X	: brazed	230 V	
	S	: rotolock	24 V AC	
	Y	: rotolock	230 V	
	CA	**C**: brazed	**A**: 24V AC	S 240 - 300
	CB		**B**: 115/230V	
	PA	**P**: rotolock	**A**: 24V AC	
	PB		**B**: 115/230V	
	CA	**C**: brazed	**A**: 24V AC	S 380
	CB		**B**: 115/230V	

* When SM compressors are used with R417A, the factory charged mineral oil 160P must be replaced by polyolester oil 160SZ
** SY/SZ380

Further reference

For more exhaustive information on Danfoss scroll compressors single & tandem units, please refer to the following documents:

Online datasheet generator: www.danfoss.com/odsg - a tool providing user-friendly access to full technical data, performance data & outline drawings for each individual compressor.

Selection and application guidelines for SM, SY and SZ Danfoss single scroll compressors - reference FRCC.PC.003. and for SM, SY and SZ Danfoss scroll compressors in parallel installation - reference FRCC.PC.005.

Above documents and datasheet generator are available on the Danfoss Commercial Compressors internet website: http://cc.danfoss.com

Performance data SM / SY R22

Model	To	-20		-15		-10		-5		0		5		10		15	
	Tc	Qo	Pe	Qo	Pe	Qo	Pe	Qo	Pe	Qo	Pe	Qo	Pe	Qo	Pe	Qo	Pe
SM084	35	9 600	4.78	12 200	4.81	15 200	4.83	18 700	4.86	22 600	4.89	27 100	4.91	32 100	4.92	37 800	4.93
	55	-	-	-	-	-	-	15 000	7.53	18 500	7.51	22 500	7.49	27 000	7.45	32 100	7.40
SM090	35	10 600	5.20	13 300	5.25	16 500	5.29	20 200	5.33	24 500	5.36	29 400	5.38	34 900	5.39	41 100	5.39
	55	-	-	-	-	-	-	16 400	7.93	20 000	7.93	24 200	7.92	28 900	7.90	34 300	7.86
SM100	35	11 200	5.41	14 100	5.46	17 400	5.50	21 300	5.54	25 700	5.58	30 700	5.61	36 400	5.62	42 700	5.63
	55	-	-	-	-	-	-	17 200	8.26	21 000	8.26	25 300	8.25	30 100	8.23	35 600	8.19
SM110	35	12 800	6.17	16 100	6.22	20 000	6.26	24 400	6.30	29 500	6.34	35 200	6.37	41 600	6.40	48 800	6.43
	55	-	-	-	-	-	-	19 800	9.46	24 100	9.47	29 000	9.47	34 500	9.46	40 700	9.44
SM112	35	14 100	6.07	17 600	6.19	21 600	6.33	26 200	6.48	31 500	6.64	37 600	6.83	44 400	7.02	52 200	7.23
	55	-	-	-	-	-	-	21 700	9.40	26 200	9.51	31 300	9.66	37 100	9.82	43 700	10.02
SM120	35	15 000	7.10	18 800	7.13	23 300	7.17	28 400	7.20	34 200	7.25	40 800	7.29	48 300	7.34	56 600	7.39
	55	-	-	-	-	-	-	23 000	10.92	28 000	10.93	33 700	10.94	40 100	10.94	47 300	10.95
SM124	35	16 000	6.50	19 800	6.64	24 300	6.82	29 500	7.05	35 400	7.32	42 200	7.63	49 900	7.97	58 600	8.36
	55	-	-	-	-	-	-	24 100	10.20	29 100	10.37	34 700	10.60	41 200	10.87	48 600	11.18
SM147	35	18 600	7.58	22 800	7.75	27 800	7.93	33 500	8.10	40 000	8.29	47 500	8.47	55 900	8.66	65 500	8.84
	55	-	-	-	-	-	-	28 000	11.75	33 600	11.97	40 100	12.20	47 600	12.46	56 000	12.73
SM148	35	18 100	8.32	22 600	8.44	27 800	8.54	33 800	8.62	40 600	8.71	48 500	8.79	57 400	8.89	67 500	9.00
	55	-	-	-	-	-	-	27 600	12.91	33 500	13.03	40 300	13.13	48 000	13.22	56 700	13.31
SM161	35	19 700	8.99	24 600	9.12	30 200	9.23	36 700	9.32	44 200	9.41	52 700	9.51	62 400	9.61	73 300	9.72
	55	-	-	-	-	-	-	30 000	13.96	36 400	14.08	43 800	14.19	52 100	14.29	61 600	14.39
SM175	35	21 100	9.81	26 400	9.98	32 500	10.15	39 500	10.31	47 500	10.46	56 500	10.59	66 600	10.70	77 800	10.80
	55	-	-	-	-	-	-	32 200	15.06	39 200	15.23	47 000	15.39	55 800	15.53	65 600	15.65
SM185	35	22 500	10.42	28 100	10.60	34 600	10.78	42 000	10.95	50 500	11.10	60 100	11.25	70 800	11.37	82 800	11.47
	55	-	-	-	-	-	-	34 300	15.99	41 700	16.17	50 000	16.34	59 300	16.49	69 800	16.62
SY185	35	22 500	10.37	28 000	10.49	34 500	10.60	42 000	10.71	50 800	10.83	60 800	10.94	72 200	11.05	85 100	11.16
	55	-	-	-	-	-	-	34 600	15.85	42 100	16.13	50 800	16.39	60 700	16.63	71 900	16.86
SY240	35	30 600	13.98	38 200	14.17	47 100	14.43	57 300	14.75	69 100	15.15	82 500	15.63	97 600	16.19	114 800	16.84
	55	-	-	-	-	-	-	46 700	21.37	56 700	21.74	68 100	22.16	81 000	22.64	95 700	23.19
SY300	35	39 800	16.39	49 400	16.85	60 600	17.38	73 600	17.97	88 500	18.59	105 600	19.25	125 000	19.91	146 900	20.58
	55	-	-	-	-	-	-	59 600	25.95	72 300	26.65	86 800	27.43	103 400	28.30	122 300	29.22
SY380	35	49 000	20.86	60 600	21.18	74 200	21.63	89 900	22.16	108 000	22.77	128 600	23.41	152 100	24.06	178 600	24.68
	55	-	-	-	-	-	-	72 800	32.58	88 300	32.94	106 000	33.45	126 200	34.09	149 000	34.81
SM170	35	18 900	9.54	24 000	9.60	29 900	9.66	36 800	9.72	44 500	9.77	53 300	9.80	63 300	9.83	74 400	9.85
	55	-	-	-	-	-	-	29 500	15.04	36 400	15.01	44 300	14.96	53 300	14.89	63 300	14.80
SM180	35	20 900	10.40	26 200	10.49	32 600	10.57	39 900	10.65	48 300	10.71	57 900	10.76	68 700	10.78	80 900	10.78
	55	-	-	-	-	-	-	32 300	15.85	39 400	15.85	47 600	15.83	57 000	15.79	67 500	15.71
SM200	35	22 000	10.81	27 700	10.91	34 300	11.00	41 900	11.08	50 600	11.15	60 500	11.21	71 700	11.24	84 200	11.25
	55	-	-	-	-	-	-	34 000	16.50	41 400	16.51	49 800	16.49	59 400	16.45	70 100	16.37
SM220	35	25 300	12.34	31 800	12.42	39 400	12.51	48 100	12.59	58 000	12.66	69 300	12.74	82 000	12.80	96 200	12.85
	55	-	-	-	-	-	-	39 000	18.91	47 500	18.92	57 100	18.92	68 000	18.90	80 300	18.86
SM242	35	29 500	14.19	37 100	14.25	45 800	14.32	55 900	14.40	67 400	14.48	80 500	14.58	95 100	14.67	111 400	14.78
	55	-	-	-	-	-	-	45 300	21.83	55 200	21.84	66 400	21.86	79 100	21.87	93 200	21.88
SM248	35	32 000	13.01	39 700	13.27	48 600	13.64	58 900	14.09	70 800	14.63	84 400	15.25	99 800	15.95	117 300	16.71
	55	-	-	-	-	-	-	48 200	20.40	58 100	20.75	69 500	21.19	82 500	21.73	97 200	22.36
SM268	35	32 600	15.41	40 800	15.56	50 300	15.70	61 200	15.83	73 700	15.95	88 000	16.08	104 100	16.23	122 200	16.39
	55	-	-	-	-	-	-	49 900	23.83	60 600	23.95	72 900	24.06	86 800	24.16	102 500	24.25
SM271	35	32 100	15.16	40 100	15.33	49 400	15.48	60 200	15.62	72 500	15.75	86 600	15.88	102 500	16.01	120 300	16.15
	55	-	-	-	-	-	-	49 100	23.42	59 600	23.55	71 700	23.66	85 400	23.75	100 800	23.83
SM272	35	34 600	14.10	42 700	14.40	52 100	14.70	62 900	15.10	75 400	15.60	89 700	16.10	105 800	16.60	124 100	17.20
	55	-	-	-	-	-	-	52 000	22.00	62 700	22.30	74 900	22.80	88 800	23.30	104 600	23.90
SM281	35	34 200	16.09	42 700	16.25	52 700	16.39	64 100	16.53	77 200	16.66	92 100	16.80	109 000	16.95	128 000	17.11
	55	-	-	-	-	-	-	52 200	24.87	63 500	25.01	76 300	25.13	90 900	25.24	107 300	25.34
SM294	35	37 200	15.15	45 700	15.50	55 500	15.85	66 900	16.21	80 000	16.57	94 900	16.94	111 800	17.31	131 000	17.69
	55	-	-	-	-	-	-	55 900	23.50	67 300	23.94	80 300	24.40	95 100	24.91	111 900	25.46
SM296	35	29 500	14.19	37 100	14.25	45 800	14.32	55 900	14.40	67 400	14.48	80 500	14.58	95 100	14.67	111 400	14.78
	55	-	-	-	-	-	-	45 300	21.83	55 200	21.84	66 400	21.86	79 100	21.87	93 200	21.88
SM322	35	38 900	17.97	48 400	18.22	59 500	18.44	72 300	18.63	87 000	18.81	103 800	19.00	122 900	19.20	144 500	19.43
	55	-	-	-	-	-	-	59 100	27.89	71 700	28.15	86 200	28.37	102 700	28.57	121 400	28.76
SM350	35	41 600	19.61	52 000	19.95	64 000	20.28	77 800	20.60	93 500	20.90	111 200	21.16	131 100	21.40	153 300	21.58
	55	-	-	-	-	-	-	63 500	30.10	77 100	30.44	92 600	30.75	109 900	31.04	129 200	31.28
SM370	35	44 300	20.83	55 400	21.19	68 100	21.54	82 800	21.88	99 500	22.19	118 300	22.48	139 500	22.72	163 100	22.92
	55	-	-	-	-	-	-	67 600	31.96	82 100	32.32	98 500	32.66	116 900	32.96	137 500	33.22

Rating conditions:

To: Evaporating temperature in °C
Tc: Condensing temperature in °C
Qo: Cooling capacity in W
Pe: Power input in kW
Superheat = 11.1 K
Subcooling = 8.3 K
Voltage: 460 V / 3 / 60 Hz

Performance data R134a

Model	To	-15		-10		-5		0		5		10		15	
	Tc	Qo	Pe	Qo	Pe	Qo	Pe	Qo	Pe	Qo	Pe	Qo	Pe	Qo	Pe
SZ084	35	7 800	3.3	9 800	3.3	12 300	3.3	15 300	3.3	18 700	3.3	22 700	3.3	27 200	3.2
	55	-	-	7 800	5.0	9 900	5.1	12 300	5.1	15 200	5.1	18 500	5.1	22 400	5.1
SZ090	35	8 200	3.5	10 400	3.5	13 100	3.5	16 100	3.5	19 700	3.5	23 900	3.5	28 600	3.4
	55	-	-	8 300	5.3	10 500	5.3	13 000	5.4	16 000	5.4	19 500	5.4	23 600	5.4
SZ100	35	8 800	3.6	11 100	3.7	13 900	3.7	17 100	3.7	20 900	3.7	25 300	3.7	30 200	3.7
	55	-	-	8 800	5.6	11 100	5.6	13 800	5.7	17 000	5.7	20 700	5.7	24 900	5.7
SZ110	35	10 100	4.1	12 800	4.2	15 900	4.2	19 600	4.3	23 800	4.3	28 700	4.3	34 300	4.3
	55	-	-	10 000	6.3	12 700	6.4	15 800	6.4	19 400	6.5	23 600	6.5	28 300	6.5
SZ120	35	11 900	4.8	15 000	4.9	18 600	4.9	22 800	5.0	27 700	5.0	33 300	5.0	39 600	5.0
	55	-	-	11 700	7.3	14 800	7.4	18 400	7.5	22 600	7.5	27 400	7.5	32 800	7.5
SZ148	35	13 400	6.0	17 100	6.1	21 400	6.2	26 500	6.3	32 500	6.3	39 500	6.2	47 500	6.0
	55	-	-	13 400	9.2	17 000	9.4	21 300	9.5	26 300	9.5	32 200	9.4	39 000	9.3
SZ161	35	14 600	6.2	18 600	6.3	23 300	6.4	28 800	6.5	35 300	6.5	42 800	6.5	51 400	6.5
	55	-	-	14 700	9.4	18 700	9.6	23 300	9.7	28 600	9.8	34 900	9.8	42 000	9.8
SZ175	35	16 300	6.8	20 500	6.9	25 600	6.9	31 500	7.0	38 400	7.1	46 300	7.1	55 300	7.1
	55	-	-	16 100	10.1	20 300	10.3	25 400	10.4	31 200	10.5	38 000	10.6	45 800	10.6
SZ185	35	17 300	7.2	21 900	7.3	27 200	7.4	33 500	7.5	40 900	7.6	49 300	7.6	58 900	7.6
	55	-	-	17 100	10.8	21 700	11.0	27 000	11.1	33 300	11.2	40 500	11.3	48 800	11.4
SZ240	35	23 200	10.1	29 400	10.2	36 700	10.4	45 400	10.5	55 500	10.7	67 300	10.9	80 800	11.1
	55	-	-	23 000	14.9	29 100	15.0	36 400	15.2	44 900	15.4	54 800	15.7	66 200	15.9
SZ300	35	29 100	12.3	36 500	12.7	45 400	13.0	55 900	13.2	68 300	13.4	82 700	13.6	99 500	13.8
	55	-	-	28 800	18.4	36 100	18.9	44 800	19.3	55 100	19.7	67 200	20.0	81 400	20.3
SZ380	35	36 200	15.2	45 500	15.7	56 500	16.0	69 500	16.3	84 800	16.5	102 600	16.8	123 200	17.1
	55	-	-	36 000	22.2	45 200	22.7	56 100	23.1	68 900	23.4	84 000	23.6	101 500	23.7
SZ170	35	15 300	6.6	19 400	6.6	24 300	6.6	30 100	6.6	36 800	6.6	44 700	6.6	53 600	6.5
	55	-	-	15 400	10.0	19 500	10.1	24 300	10.2	29 900	10.2	36 500	10.3	44 100	10.3
SZ180	35	16 200	6.9	20 500	7.0	25 700	7.0	31 800	7.0	38 900	7.0	47 100	7.0	56 400	6.9
	55	-	-	16 300	10.6	20 600	10.6	25 700	10.7	31 600	10.8	38 500	10.8	46 500	10.8
SZ200	35	17 200	7.3	21 800	7.4	27 300	7.4	33 700	7.4	41 200	7.4	49 800	7.4	59 600	7.4
	55	-	-	17 300	11.2	21 800	11.3	27 200	11.3	33 500	11.4	40 800	11.4	49 100	11.4
SZ220	35	19 900	8.3	25 100	8.4	31 300	8.4	38 600	8.5	47 000	8.5	56 600	8.5	67 500	8.5
	55	-	-	19 800	12.7	25 000	12.8	31 200	12.9	38 300	13.0	46 400	13.0	55 800	13.0
SZ242	35	23 300	9.6	29 500	9.7	36 700	9.8	45 000	9.9	54 600	10.0	65 500	10.0	77 900	10.0
	55	-	-	23 100	14.7	29 200	14.8	36 300	14.9	44 500	15.0	53 900	15.1	64 600	15.1
SZ268	35	24 900	10.8	31 600	11.0	39 400	11.1	48 600	11.2	59 300	11.3	71 600	11.2	85 700	11.0
	55	-	-	24 700	16.6	31 400	16.8	39 200	17.0	48 200	17.0	58 700	17.0	70 700	16.8
SZ271	35	24 300	10.4	30 900	10.5	38 600	10.6	47 700	10.7	58 200	10.8	70 400	10.8	84 400	10.8
	55	-	-	24 400	15.8	30 900	16.0	38 500	16.1	47 300	16.3	57 600	16.3	69 300	16.3
SZ281	35	26 100	11.0	33 000	11.2	41 300	11.3	50 900	11.4	62 100	11.5	74 900	11.6	89 600	11.5
	55	-	-	26 000	16.8	33 000	17.0	41 100	17.2	50 500	17.3	61 300	17.4	73 700	17.4
SZ296	35	26 500	12.0	33 700	12.3	42 200	12.5	52 300	12.5	64 000	12.5	77 700	12.3	93 500	12.0
	55	-	-	26 400	18.5	33 500	18.8	42 000	19.0	51 900	19.0	63 500	18.9	76 900	18.6
SZ322	35	28 800	12.4	36 600	12.7	45 900	12.8	56 800	13.0	69 500	13.0	84 300	13.1	101 300	13.0
	55	-	-	29 000	18.9	36 700	19.2	45 800	19.4	56 400	19.5	68 700	19.6	82 800	19.7
SZ350	35	32 100	13.5	40 500	13.7	50 400	13.9	62 100	14.0	75 600	14.1	91 200	14.2	109 000	14.2
	55	-	-	31 600	20.2	40 100	20.5	50 000	20.7	61 500	20.9	74 900	21.1	90 200	21.3
SZ370	35	34 100	14.4	43 100	14.6	53 700	14.8	66 100	15.0	80 500	15.1	97 100	15.2	116 000	15.2
	55	-	-	33 700	21.6	42 700	21.9	53 200	22.1	65 500	22.4	79 700	22.6	96 100	22.7

Rating conditions:
To: Evaporating temperature in °C
Tc: Condensing temperature in °C
Qo: Cooling capacity in W
Pe: Power input in kW
Superheat = 11.1 K
Subcooling = 8.3 K
Voltage: 460 V / 3 / 60 Hz

Performance data SZ R407C

Model	To	-20		-15		-10		-5		0		5		10		15	
	Tc	Qo	Pe	Qo	Pe	Qo	Pe	Qo	Pe	Qo	Pe	Qo	Pe	Qo	Pe	Qo	Pe
SZ084	35	8 400	4.5	11 100	4.5	14 300	4.5	17 900	4.5	22 000	4.5	26 700	4.5	32 000	4.4	37 900	4.3
	55	-	-	-	-	-	-	12 600	7.2	16 200	7.2	20 300	7.2	25 000	7.1	30 100	7.1
SZ090	35	9 200	4.8	12 000	4.9	15 300	4.9	19 100	4.9	23 500	5.0	28 500	4.9	34 200	4.9	40 700	4.8
	55	-	-	-	-	-	-	14 100	7.7	17 800	7.7	22 100	7.7	27 000	7.7	32 500	7.7
SZ100	35	10 000	5.2	12 900	5.2	16 400	5.3	20 400	5.4	25 100	5.4	30 600	5.4	36 800	5.4	43 800	5.4
	55	-	-	-	-	-	-	15 800	8.2	19 700	8.2	24 100	8.3	29 200	8.3	35 000	8.3
SZ110	35	11 500	5.8	14 800	5.9	18 700	6.0	23 300	6.1	28 600	6.1	34 700	6.1	41 700	6.1	49 600	6.0
	55	-	-	-	-	-	-	18 000	9.4	22 400	9.4	27 400	9.4	33 200	9.4	39 700	9.3
SZ120	35	13 500	6.8	17 300	6.9	21 800	6.9	27 000	7.0	33 100	7.0	40 100	7.0	48 100	7.0	57 100	6.9
	55	-	-	-	-	-	-	20 900	10.9	25 900	10.9	31 700	10.9	38 300	10.9	45 900	10.8
SZ148	35	16 500	8.3	21 100	8.4	26 400	8.5	32 700	8.7	40 000	8.8	48 500	8.9	58 300	8.9	69 500	8.9
	55	-	-	-	-	-	-	25 800	13.3	31 800	13.4	38 800	13.5	46 900	13.6	56 300	13.7
SZ161	35	17 800	8.9	22 700	9.0	28 500	9.1	35 300	9.2	43 200	9.3	52 300	9.4	62 900	9.6	75 000	9.7
	55	-	-	-	-	-	-	27 900	14.3	34 400	14.4	41 900	14.5	50 600	14.6	60 700	14.6
SZ175	35	19 300	9.5	24 600	9.6	30 800	9.8	38 000	9.9	46 500	10.0	56 300	10.1	67 500	10.1	80 200	10.1
	55	-	-	-	-	-	-	29 400	15.1	36 300	15.3	44 300	15.4	53 600	15.5	64 100	15.6
SZ185	35	20 600	10.2	26 100	10.4	32 700	10.5	40 500	10.6	49 500	10.7	59 900	10.8	71 800	10.9	85 400	10.9
	55	-	-	-	-	-	-	31 300	16.3	38 600	16.4	47 200	16.6	57 000	16.7	68 200	16.8
SZ240	35	26 900	14.0	34 700	14.3	43 900	14.7	54 700	15.0	67 300	15.3	81 900	15.6	98 700	15.9	117 900	16.2
	55	-	-	26 600	21.2	34 200	21.6	42 900	22.1	53 100	22.4	64 800	22.8	78 400	23.1	94 000	23.4
SZ300	35	35 800	16.7	44 900	17.1	55 700	17.4	68 400	17.8	83 500	18.1	101 300	18.4	122 000	18.7	146 100	19.1
	55	-	-	34 300	25.6	43 000	26.1	53 300	26.6	65 500	27.1	80 000	27.6	97 100	28.1	117 100	28.6
SZ380	35	42 900	20.3	54 100	20.7	67 300	21.2	82 900	21.7	101 000	22.2	122 100	22.8	146 400	23.3	174 100	23.8
	55	-	-	41 900	31.4	52 800	31.9	65 500	32.4	80 500	33.0	97 900	33.6	118 100	34.3	141 300	34.9
SZ170	35	16 600	8.9	21 900	9.0	28 100	9.0	35 300	9.1	43 400	9.0	52 600	9.0	63 000	8.8	74 600	8.6
	55	-	-	-	-	-	-	24 800	14.3	31 900	14.3	40 000	14.3	49 200	14.3	59 400	14.1
SZ180	35	18 100	9.6	23 600	9.7	30 100	9.8	37 600	9.9	46 300	9.9	56 200	9.9	67 500	9.8	80 100	9.7
	55	-	-	-	-	-	-	27 800	15.4	35 100	15.4	43 600	15.5	53 100	15.4	63 900	15.4
SZ200	35	19 800	10.3	25 500	10.5	32 300	10.6	40 200	10.7	49 500	10.8	60 200	10.8	72 400	10.8	86 300	10.7
	55	-	-	-	-	-	-	31 200	16.4	38 700	16.5	47 500	16.5	57 600	16.6	69 000	16.5
SZ220	35	22 700	11.7	29 200	11.9	36 900	12.0	45 800	12.1	56 300	12.2	68 300	12.2	82 100	12.1	97 600	12.0
	55	-	-	-	-	-	-	35 500	18.7	44 100	18.8	54 000	18.8	65 300	18.8	78 200	18.7
SZ242	35	26 600	13.5	34 000	13.7	42 900	13.9	53 200	14.0	65 200	14.0	79 000	14.0	94 800	13.9	112 600	13.8
	55	-	-	-	-	-	-	41 200	21.8	51 100	21.8	62 500	21.8	75 500	21.7	90 400	21.5
SZ268	35	29 600	15.1	37 800	15.3	47 400	15.5	58 800	15.7	72 000	15.8	87 300	15.9	104 800	15.9	124 700	15.8
	55	-	-	-	-	-	-	46 100	24.2	56 900	24.3	69 500	24.4	84 000	24.4	100 600	24.5
SZ271	35	28 900	14.7	37 000	15.0	46 500	15.1	57 700	15.3	70 700	15.4	85 700	15.5	103 000	15.6	122 700	15.7
	55	-	-	-	-	-	-	45 200	23.6	55 900	23.8	68 300	23.9	82 500	24.0	98 900	24.0
SZ281	35	30 900	15.7	39 400	15.9	49 500	16.1	61 300	16.2	75 100	16.4	91 100	16.5	109 300	16.5	130 100	16.6
	55	-	-	-	-	-	-	48 100	25.2	59 400	25.3	72 500	25.4	87 600	25.4	105 000	25.4
SZ290	35	31 500	15.9	40 200	16.2	50 500	16.4	62 600	16.6	76 700	16.7	92 900	16.7	111 500	16.7	132 600	16.6
	55	-	-	-	-	-	-	48 300	25.5	59 800	25.7	73 100	25.8	88 400	25.9	105 800	25.9
SZ296	35	32 600	16.6	41 500	16.8	52 000	17.0	64 400	17.3	78 800	17.6	95 500	17.7	114 800	17.8	136 900	17.8
	55	-	-	-	-	-	-	50 900	26.5	62 700	26.7	76 500	26.9	92 500	27.2	110 800	27.4
SZ322	35	35 100	17.8	44 800	18.0	56 100	18.3	69 500	18.5	85 000	18.7	103 100	18.9	123 900	19.1	147 700	19.4
	55	-	-	-	-	-	-	54 900	28.5	67 700	28.7	82 600	28.9	99 800	29.1	119 600	29.2
SZ350	35	38 100	19.0	48 400	19.2	60 600	19.5	74 900	19.8	91 700	20.0	111 000	20.1	133 000	20.2	158 100	20.3
	55	-	-	-	-	-	-	57 900	30.3	71 600	30.6	87 300	30.8	105 500	31.1	126 300	31.2
SZ370	35	40 500	20.4	51 500	20.7	64 400	21.0	79 700	21.3	97 500	21.5	118 000	21.7	141 500	21.8	168 200	21.8
	55	-	-	-	-	-	-	61 600	32.5	76 100	32.9	92 900	33.2	112 300	33.4	134 300	33.6

To: Evaporating temperature in °C
Tc: Condensing temperature in °C
Qo: Cooling capacity in W
Pe: Power input in kW
Superheat = 11.1 K
Subcooling = 8.3 K
Voltage: 460 V / 3 / 60 Hz

Model	Connections	Motor protection	SM /SY compressors in single pack				SZ compressors in single pack			
			3	4	7	9	3	4	7	9
			200-230/3/60	460/3/60 380-400/3/50	575/3/60 500/3/50	380/3/60	200-230/3/60	460/3/60 380-400/3/50	575/3/60 500/3/50	380/3/60
S 084	Brazed	Internal	SZ084-3VI	SZ084-4VI	SZ084-7VI	SZ084-9VI	SZ084-3VI	SZ084-4VI	SZ084-6VI	SZ084-7VI
S 090	Brazed	Internal	SZ090-3VI	SZ090-4VI	SZ090-7VI	SZ090-9VI	SZ090-3VI	SZ090-4VI	SZ090-6VI	SZ090-7VI
S 100	Brazed	Internal	SZ100-3VI	SZ100-4VI	SZ100-7VI	SZ100-9VI	SZ100-3VI	SZ100-4VI	SZ100-6VI	SZ100-7VI
S 110	Brazed	Internal	SZ110-3VI	SZ110-4VI	SZ110-7VI	SZ110-9VI	SZ110-3VI	SZ110-4VI	SZ110-6VI	SZ110-7VI
S 120	Brazed	Internal	SZ120-3VI	SZ120-4VI	SZ120-7VI	SZ120-9VI	SZ120-3VI	SZ120-4VI	SZ120-6VI	SZ120-7VI
S 148	Brazed	Internal	SZ148-3VAI	SZ148-4VAI	SZ148-7VAI	SZ148-9VAI	SZ148-3VAI	SZ148-4VAI	SZ148-6VAI	SZ148-7VAI
S 161	Brazed	Internal	SZ161-3VAI	SZ161-4VAI	SZ161-7VAI	SZ161-9VAI	SZ161-3VAI	SZ161-4VAI	SZ161-6VAI	SZ161-7VAI
S 175	Brazed	Thermostat	SM175-3CAI	SM175-4CAI	SM175-7CAI	SM175-9CAI	SZ175-3CAI	SZ175-4CAI	SZ175-7CAI	SZ175-9CAI
	Brazed	Module 24V AC	SM175-3PCI	SM175-4PCI	SM175-7PCI	-	SZ175-3PCI	SZ175-4PCI	SZ175-7PCI	-
	Rotolock	Thermostat	SM175-3RI	SM175-4RI	SM175-7RI	SM175-9RI	SZ175-3RI	SZ175-4RI	SZ175-7RI	SZ175-9RI
	Rotolock	Module 24V AC	SM175-3SCI	SM175-4SCI	SM175-7SCI	-	SZ175-3SCI	SZ175-4SCI	SZ175-7SCI	-
S 185	Brazed	Thermostat	SM185-3CAI	SM185-4CAI	SM185-7CAI	SM185-9CAI	SZ185-3CAI	SZ185-4CAI	SZ185-7CAI	SZ185-9CAI
	Brazed	Module 24 V AC	SM185-3PCI	SM185-4PCI	SM185-7PCI	-	SZ185-3PCI	SZ185-4PCI	SZ185-7PCI	-
	Brazed	Module 230 V	-	SM185-4XCI	-	SM185-9XCI	-	SZ185-4XCI	-	SZ185-9XCI
	Rotolock	Thermostat	SM185-3RI	SM185-4RI	SM185-7RI	SM185-9RI	SZ185-3RI	SZ185-4RI	SZ185-7RI	SZ185-9RI
	Rotolock	Module 24 V AC	SM185-3SCI	SM185-4SCI	SM185-7SCI	-	SZ185-3SCI	SZ185-4SCI	SZ185-7SCI	-
	Rotolock	Module 230 V	-	SM185-4YCI	-	SM185-9YCI	-	SZ185-4YCI	-	SZ185-9YCI
SY185	Brazed	Thermostat	-	SY185-4CAI	-	-	-	-	-	-
	Rotolock	Thermostat	-	SY185-4RI	-	-	-	-	-	-
S 240	Brazed	Module 24V AC	SY240A3CAI	SY240A4CAI	SY240A7CAI	SY240A9CAI	SZ240A3CAI	SZ240A4CAI	SZ240A7CAI	SZ240A9CAI
	Brazed	Module 115-230V AC	SY240A3CBI	SY240A4CBI	SY240A7CBI	SY240A9CBI	SZ240A3CBI	SZ240A4CBI	SZ240A7CBI	SZ240A9CBI
	Rotolock	Module 24V AC	SY240A3PAI	SY240A4PAI	SY240A7PAI	SY240A9PAI	SZ240A3PAI	SZ240A4PAI	SZ240A7PAI	SZ240A9PAI
	Rotolock	Module 115-230V AC	SY240A3PBI	SY240A4PBI	SY240A7PBI	SY240A9PBI	SZ240A3PBI	SZ240A4PBI	SZ240A7PBI	SZ240A9PBI
S 300	Brazed	Module 24V AC	SY300A3CAI	SY300A4CAI	SY300A7CAI	SY300A9CAI	SZ300A3CAI	SZ300A4CAI	SZ300A7CAI	SZ300A9CAI
	Brazed	Module 115-230V AC	SY300A3CBI	SY300A4CBI	SY300A7CBI	SY300A9CBI	SZ300A3CBI	SZ300A4CBI	SZ300A7CBI	SZ300A9CBI
	Rotolock	Module 24V AC	SY300A3PAI	SY300A4PAI	SY300A7PAI	SY300A9PAI	SZ300A3PAI	SZ300A4PAI	SZ300A7PAI	SZ300A9PAI
	Rotolock	Module 115-230V AC	SY300A3PBI	SY300A4PBI	SY300A7PBI	SY300A9PBI	SZ300A3PBI	SZ300A4PBI	SZ300A7PBI	SZ300A9PBI
S 380	Brazed	Module 24V AC	-	SY380A4CAI	-	-	-	SZ380A4CAI	-	-
	Brazed	Module 15-230V AC	-	SY380A4CBI	-	120H1115	-	SZ380A4CBI	-	120H1113

SM/SY and SZ compressors in industrial pack:
Use numbers from above table and replace the last digit by «M». Example: SY240A4CAM, except for compressors with voltage code 7 which are not available in industrial pack
SY 380 Code 9 is available in industrial pack: 120H1116
SZ 380 Code 9 is available in industrial pack: 120H1114

Model	Connections	Motor protection	SM112-124-147 compressors in industrial pack				SM112-124-147 compressors in single pack			
			3	4	7	9	3	4	7	9
			200-230/3/60	460/3/60 380-400/3/50	575/3/60 500/3/50	380/3/60	200-230/3/60	460/3/60 380-400/3/50	575/3/60 500/3/50	380/3/60
SM112	Brazed	Internal	120H0610	120H0612	-	120H0614	120H0609	120H0611	-	120H0613
SM124	Brazed	Internal	120H0184	120H0186	-	120H0188	120H0183	120H0185	-	120H0187
SM147	Brazed	Internal	120H0190	120H0311	-	120H0198	120H0189	120H0191	-	120H0197

ENGINEERING
TOMORROW

Danfoss Commercial Compressors

is a worldwide manufacturer of compressors and condensing units for refrigeration and HVAC applications. With a wide range of high quality and innovative products we help your company to find the best possible energy efficient solution that respects the environment and reduces total life cycle costs.

We have 40 years of experience within the development of hermetic compressors which has brought us amongst the global leaders in our business, and positioned us as distinct variable speed technology specialists. Today we operate from engineering and manufacturing facilities spread across three continents.

Danfoss Turbocor Compressors

Danfoss Inverter Scrolls

Danfoss Scrolls

Danfoss Optyma Condensing Units

Danfoss Maneurop Reciprocating Compressors

Secop Compressors for Danfoss

Our products can be found in a variety of applications such as rooftops, chillers, residential air conditioners, heatpumps, coldrooms, supermarkets, milk tank cooling and industrial cooling processes.

http://cc.danfoss.com

Danfoss Commercial Compressors, BP 331, 01603 Trévoux Cedex, France | +334 74 00 28 29

member of:
ASERCOM
www.asercom.org

Danfoss can accept no responsibility for possible errors in catalogues, brochures and other printed material. Danfoss reserves the right to alter its products without notice. This also applies to products already on order provided that such alterations can be made without subsequential changes being necessary in specifications already agreed.
All trademarks in this material are property of the respective companies. Danfoss and the Danfoss logotype are trademarks of Danfoss A/S. All rights reserved.

FRCC.PK.009.A5.02 - October 2014 - Replaces FRCC.PK.009.A4.02 - January 2013

© Copyright Danfoss | Commercial Compressors | 2014.10