ENGINEERING
TOMORROW

Service Manual

Axial Piston Variable Pumps
Series 40 M46 Tandem

powersolutions.danfoss.com

Revision history

Table of revisions

Date	Changed	Rev
September 2017	minor edit - Displacement limiter torque change	0202
November 2014	Danfoss layout	BA
September 2010	New Back Page	AD
March 2010	Fix Osaka address	AC
March 2009	added spool alignment illustration	AB
June 2008	First edition	AA

Contents

Introduction

Overview....4
Warranty....4
General instructions....4
Safety precautions....4
Symbols used in Danfoss literature....6
Design....6
The system circuit....7
Pump schematic....9

Fluid and filter maintenance

Fluid and filter recommendations....10

Initial startup procedures

General....11
Start-up procedure....11

Pressure measurements

Required tools....13
Port locations and gauge installation....13

Troubleshooting

Overview....15
Safety precautions....15
System noise or vibration....15
System operating hot....15
System will not operate in one direction....16
System will not operate in either direction....16
Neutral difficult or impossible to find....17
System response is sluggish....17
Electrical troubleshooting....18

Adjustments

Standard procedures, inspections, and adjustments....19
Warranty....19
Pump adjustment....19
Charge pressure relief valve....19
Engaging the bypass function....20
System check/relief (SCR) valves....21
Displacement limiter adjustment....22
Displacement limiter adjustment data....23
Swashplate neutral adjustment....23
Manual Displacement Control Bracket Neutral Adjustment....24
Electronic Displacement Control/Hydraulic Displacement Control Neutral Adjustment....25

Minor repair

Standard procedures, removing the pump....27
Displacement limiter....27
Pressure filtration adapter....28
Charge pump....29
Shaft seal....31
SCR valves....32
Charge pressure relief valve....33
Bypass valve....34
Manual displacement control....35
Electronic Displacement Control/Hydraulic Displacement Control....36
MDC orifice repair....38
EDC/HDC orifice repair....39

Torque chart

Fastener size and torque chart....41
Plug size and torque chart....41

Introduction

Overview

This manual includes information for the installation, maintenance, and minor repair of the Series 40 M46 tandem pump. It includes a description of the unit and its individual components, troubleshooting information, and minor repair procedures.

Performing minor repairs requires the unit to be removed from the vehicle/machine. Thoroughly clean the unit before beginning maintenance, or repair activities. Since dirt and contamination are the greatest enemies of any type of hydraulic equipment, follow cleanliness requirements strictly. This is especially important when changing the system filter and when removing hoses or plumbing.

A worldwide network of Danfoss Global Service Partners is available for major repairs. Danfoss Global Service Partners are trained by the factory and certified on a regular basis. You can locate your nearest Global Service Partner using the distributor locator at www.sauer-danfoss.com.

Warranty

Performing installation, maintenance, and minor repairs according to the procedures in this manual will not affect your warranty. Major repairs requiring the removal of a unit's rear cover or front flange voids the warranty unless done by a Danfoss Global Service Partner.

General instructions

Follow these general procedures when repairing Series 40 M46 tandem variable displacement closed circuit pumps.

Remove the unit

Prior to performing major repairs, remove the unit from the vehicle/machine. Chock the wheels on the vehicle or lock the mechanism to inhibit movement. Be aware that hydraulic fluid may be under high pressure and/or hot. Inspect the outside of the pump and fittings for damage. Cap hoses after removal to prevent contamination.

Keep it clean

Cleanliness is a primary means of assuring satisfactory pump life, on either new or repaired units. Clean the outside of the pump thoroughly before disassembly. Take care to avoid contamination of the system ports. Cleaning parts by using a clean solvent wash and air drying is usually adequate.

As with any precision equipment, all parts must be kept free of foreign materials and chemicals. Protect all exposed sealing surfaces and open cavities from damage and foreign material. If left unattended, cover the pump with a protective layer of plastic.

Replace all O-rings and gaskets

Replace all O-rings, gaskets and seals. Lightly lubricate all O-rings with clean hydraulic fluid or petroleum jelly prior to assembly.

Safety precautions

Always consider safety precautions before beginning a service procedure. Protect yourself and others from injury. Take the following general precautions whenever servicing a hydraulic system.

Introduction

Unintended machine movement

Warning

Unintended movement of the machine or mechanism may cause injury to the technician or bystanders. To protect against unintended movement, secure the machine or disable/disconnect the mechanism while servicing.

Flammable cleaning solvents

Warning

Some cleaning solvents are flammable. To avoid possible fire, do not use cleaning solvents in an area where a source of ignition may be present.

Fluid under pressure

Warning

Escaping hydraulic fluid under pressure can have sufficient force to penetrate your skin causing serious injury and/or infection. This fluid may also be hot enough to cause burns. Use caution when dealing with hydraulic fluid under pressure. Relieve pressure in the system before removing hoses, fittings, gauges, or components. Never use your hand or any other body part to check for leaks in a pressurized line. Seek medical attention immediately if you are cut by hydraulic fluid.

Personal safety

Warning

Protect yourself from injury. Use proper safety equipment, including safety glasses, at all times.

Hazardous material

Warning

Hydraulic fluid contains hazardous material. Avoid prolonged contact with hydraulic fluid. Always dispose of used hydraulic fluid according to state, and federal environmental regulations.

Introduction

Symbols used in Danfoss literature

WARNING may result in injury	Tip, helpful suggestion
CAUTION may result in damage to product or property	Lubricate with hydraulic fluid
Reusable part	Apply grease / petroleum jelly
Non-reusable part, use a new part	Apply locking compound
Non-removable item	Inspect for wear or damage
Option - either part may exist	Clean area or part
Superseded - parts are not interchangeable	Be careful not to scratch or damage
Measurement required	Note correct orientation
Flatness specification	Mark orientation for reinstallation
Parallelism specification	Torque specification
External hex head	Press in - press fit
Internal hex head	Pull out with tool – press fit
Torx head	Cover splines with installation sleeve
O-ring boss port	Pressure measurement/gauge location or specification

The symbols above appear in the illustrations and text of this manual. They are intended to communicate helpful information at the point where it is most useful to the reader. In most instances, the appearance of the symbol itself denotes its meaning. The legend above defines each symbol and explains its purpose.

Design

Danfoss Series 40 M46 closed circuit piston pumps convert input torque into hydraulic power. Rotational force is transmitted through the input shaft to the cylinder block. The input shaft is supported by bearings at the front and rear of the pump and is splined into the cylinder block. A lip-seal at the front end of the pump prevents leakage where the shaft exits the pump housing. The spinning cylinder block contains seven reciprocating pistons. Each piston has a brass slipper connected at one end by a ball joint. The slippers are held to the swashplate by a spring washer and charge pressure. The reciprocating movement of the pistons occurs as the slippers slide against the inclined swashplate during rotation. Via the valve plate, one half of the cylinder block is connected to low pressure and the other half to high pressure. As each piston cycles in and out of its bore, fluid is replenished by charge flow and displaced to the outlet thereby imparting hydraulic power into the system. A small amount of fluid is allowed to flow from the cylinder block/valve plate and slipper/swashplate interfaces for lubrication and cooling. Excess flow across the charge pressure relief also flows through the case and is used for cooling. Case drain ports return this fluid to the reservoir.

The volume of fluid displaced into the system is controlled by the angle of the swashplate. The swashplate is forced into an inclined position (into stroke) by the servo piston.

The pump control, by varying the pressure at the servo piston, controls the displacement of fluid in the system circuit.

Introduction

Cross section view

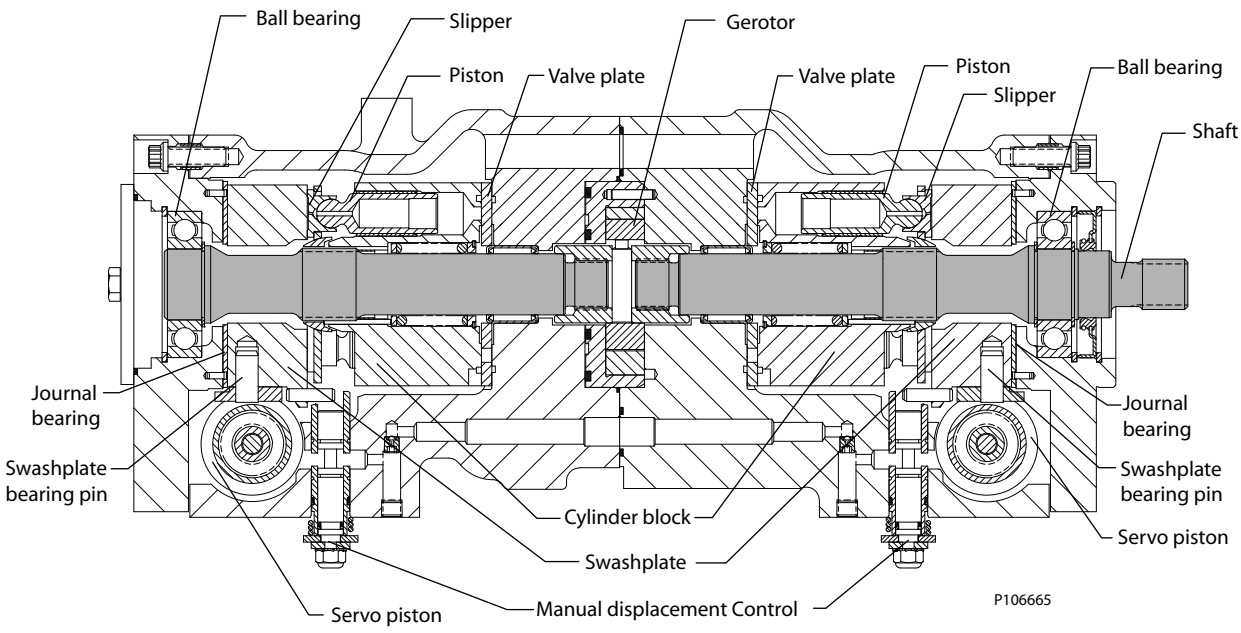

The system circuit

The basic closed circuit

The main ports of the pump are connected by hydraulic lines to the main ports of the motor. Fluid flows, in either direction, from the pump to the motor then back to the pump in this closed circuit. Either of the hydraulic lines can be under high pressure. In pumping mode the position of the pump swashplate determines which line is high pressure as well as the direction of fluid flow.

A tandem circuit contains two pumps and motors. Each pump and motor circuit is similar to the one shown.

Case drain and heat exchanger

The pump and motor case drain lines remove hot fluid from the system. The pump and motor should be drained from their top most drain port to ensure the case remains full of fluid. The motor case drain can be connected to the lower drain port on the pump housing and out the top most port or feed into the case drain line coming from the pump ahead of the heat exchanger. A heat exchanger, with a bypass valve, is required to cool the case drain fluid before it returns to the reservoir.

Introduction

System circuit diagram

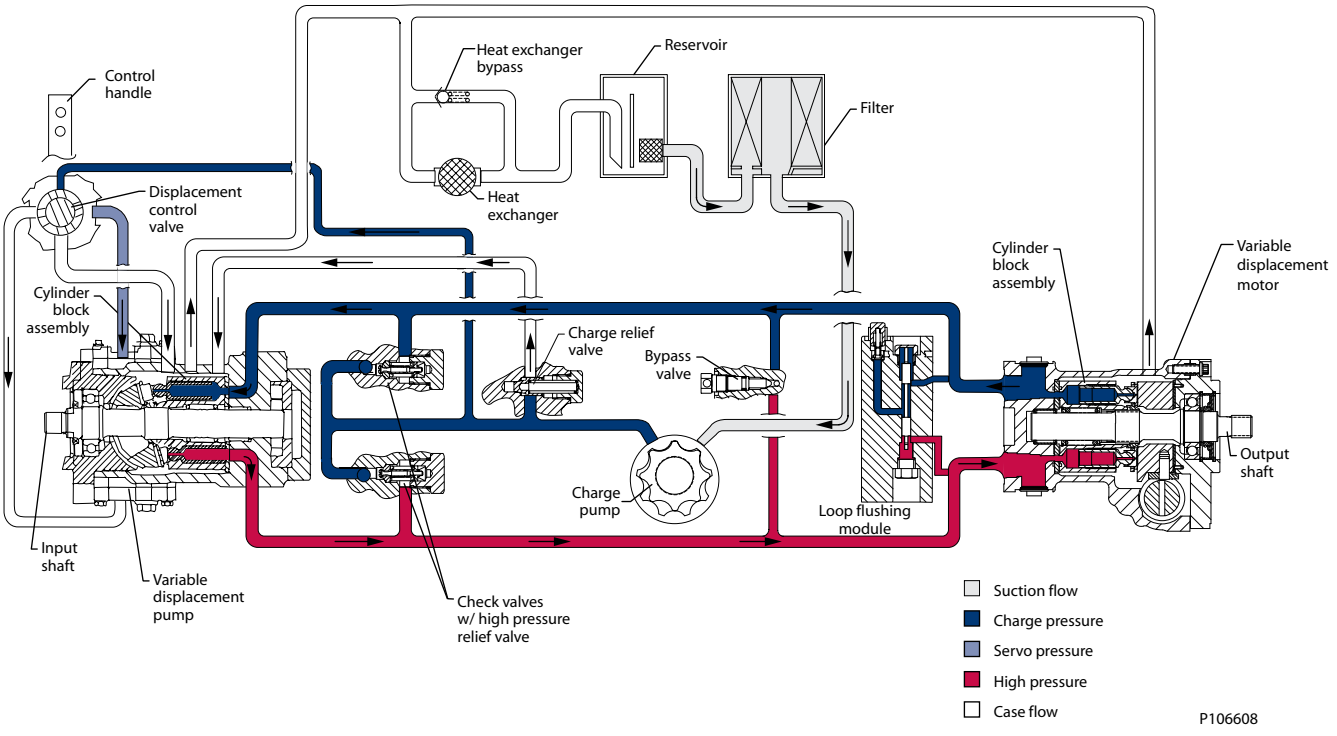

Introduction

Pump schematic

Pump schematic

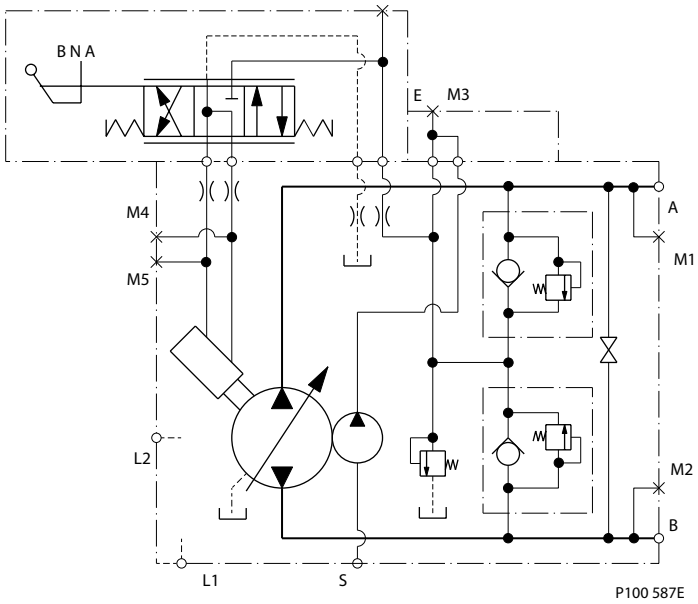

Above schematic shows the function of a Series 40 M46 axial piston variable displacement pump.

Fluid and filter maintenance

Fluid and filter recommendations

To ensure optimum life, perform regular maintenance of the fluid and filter. Contaminated fluid is the main cause of unit failure. Take care to maintain fluid cleanliness when servicing.

Check the reservoir daily for proper fluid level, the presence of water, and rancid fluid odor. Fluid contaminated by water may appear cloudy or milky, or free water may settle in the bottom of the reservoir. Rancid odor indicates the fluid has been exposed to excessive heat. Change the fluid immediately if these conditions occur. Correct the problem immediately.

Inspect vehicle for leaks daily.

Change the fluid and filter per the vehicle/machine manufacturer's recommendations or at these intervals:

First fluid change recommended at 500 hours.

Caution

High temperatures and pressures will result in accelerated fluid aging. More frequent fluid changes may be required.

Change the fluid more frequently if it becomes contaminated with foreign matter (dirt, water, grease, etc.) or if the fluid is subjected to temperature levels greater than the recommended maximum.

Dispose of used hydraulic fluid properly. Never reuse hydraulic fluid.

Change filters whenever the fluid is changed or when the filter indicator shows that it is necessary to change the filter. Replace all fluid lost during filter change.

Fluid and filter change interval

Reservoir type	Max. oil change interval
Sealed	2000 hours
Breather	500 hours

Hazardous material

Warning

Hydraulic fluid contains hazardous material. Avoid contact with hydraulic fluid. Always dispose of used hydraulic fluid according to state, and federal environmental regulations.

Initial startup procedures

General

Follow this procedure when starting-up a new pump installation or when restarting an installation in which the pump has been removed and re-installed on a machine. Ensure pump has been thoroughly tested on a test stand before installing on a machine.

Warning

Unintended movement of the machine or mechanism may cause injury to the technician or bystanders. To protect against unintended movement, secure the machine or disable/disconnect the mechanism while servicing.

Prior to installing the pump, inspect for damage that may have occurred during shipping.

Start-up procedure

1. Ensure that the machine hydraulic oil and system components (reservoir, hoses, valves, fittings, and heat exchanger) are clean and free of any foreign material.
2. Install new system filter element(s) if necessary. Check that inlet line fittings are properly tightened and there are no air leaks.
3. Install the pump. Install a 50 bar [1000 psi] gauge in the charge pressure gauge port M3.
4. Fill the housing by adding filtered oil in the upper case drain port.
5. Fill the reservoir with hydraulic fluid of the recommended type and viscosity. Use a 10-micron reservoir filler filter. Ensure inlet line from reservoir to pump is filled.
6. Disconnect the pump from all control input signals.
7. Re-install plug or fitting removed in step 4.

   After start-up the oil level in the reservoir may drop due to filling of the system components. Check the level in the reservoir to maintain a full oil level throughout the start-up.

   Warning

   Damage to hydraulic components may occur if the oil supply is not maintained.
8. Use a common method to disable the engine to prevent the engine from starting. Crank the starter for several seconds. Do not to exceed the engine manufacturer's recommendation. Wait 30 seconds and then crank the engine a second time as stated above. This operation helps remove air from the system lines. Refill the reservoir to recommended full oil level.
9. When charge pressure begins to appear, enable and start engine. Let the engine run for a minimum of 30 seconds at low idle to allow the air to work itself out of the system. Check for leaks at all line connections and listen for cavitation. Check for proper fluid level in reservoir.

   Caution

   Air entrapment in oil under high pressure may damage hydraulic components.

   Caution

   Do not run at maximum pressure until system is free of air and fluid has been thoroughly filtered.
10. When adequate charge pressure is established (as shown in model code), increase engine speed to normal operating rpm to further purge residual air from the system.

Initial startup procedures

11. Shut off engine. Connect pump control signal. Start engine, checking to be certain pump remains in neutral. Run engine at normal operating speed and carefully check for forward and reverse control operation.
12. Continue to cycle between forward and reverse for at least five minutes to bleed all air and flush system contaminants out of loop.

    Normal charge pressure fluctuation may occur during forward and reverse operation.
13. Check that the reservoir is full. Remove charge pressure gauge. Re-install charge pressure plug. The pump is now ready for operation.

Pressure measurements

Required tools

The service procedures described in this manual can be performed using common mechanic's hand tools. Special tools, if required, are shown. When testing system pressures, calibrate pressure gauges frequently to ensure accuracy. Use snubbers to protect gauges.

Port locations and gauge installation

The following tables and drawing show the port locations and gauge sizes needed.

Port information

Port identifier	Port size	Wrench size	Pressure obtained	Gauge size, bar [psi]
L1, L2, L3	1-1/16 12 SAE	9/16 internal hex	Case drain	10 [100]
MA, MB, MC, MD	9/16 18 SAE	11/16 hex	System pressure	600 [10,000]
M3	9/16 18 UNF	11/16 hex	Charge pressure	50 [1000]
M4, M5	9/16 18 SAE	11/16 hex	Servo pressure	50 [1000]

System valves

Port identifier	Relief	Port size	Wrench size
RA	A port pressure relief valve	1-5/16 12 UNF	1-1/4 hex
RB	B port pressure relief valve	1-5/16 12 UNF	1-1/4 hex
RC	C port pressure relief valve	1-5/16 12 UNF	1-1/4 hex
RD	D port pressure relief valve	1-5/16 12 UNF	1-1/4 hex
R	Charge pressure relief valve	3/4 16 UNF	7/8 hex
BP	Bypass valve	5/8 18 UNF	1 inch hex

System ports

Port identifier	Port size
A system pressure port	1-5/16 12 SAE
B system pressure port	1-5/16 12 SAE
C system pressure port	1-5/16 12 SAE
D system pressure port	1-5/16 12 SAE
S (charge pressure inlet)	1-5/16 12 SAE

Pressure measurements

Port locations

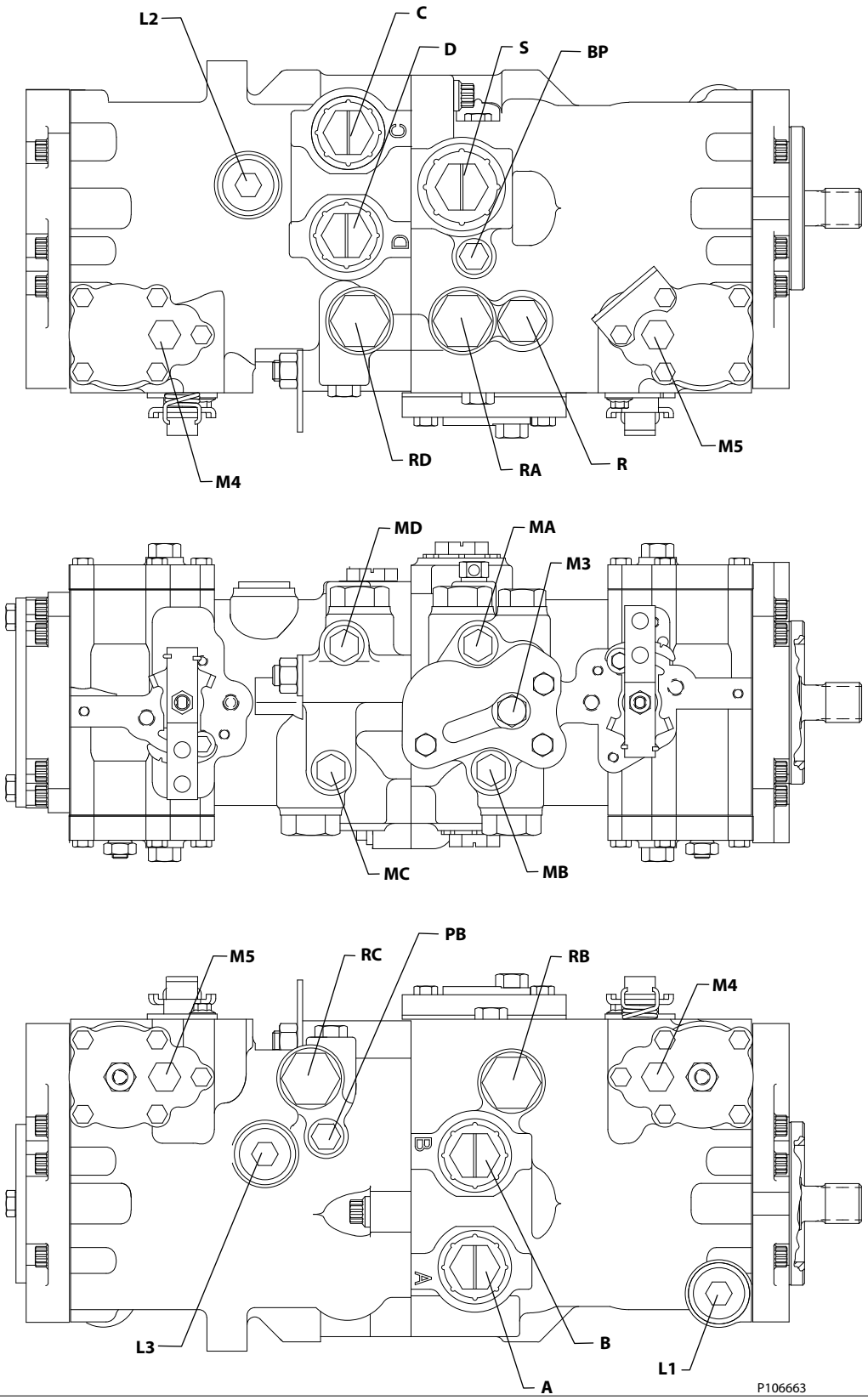

Troubleshooting

Overview

This section provides general steps to follow if undesirable system conditions are observed. Follow the steps listed until the problem is solved. Some of the items will be system specific. For areas covered in this manual, a section is referenced. Always observe the safety precautions listed in *Introduction* on page 4, and related to your specific equipment.

Safety precautions

Caution

High inlet vacuum causes cavitation which can damage internal pump components.

Caution

Contamination can damage internal components and void the manufacturer's warranty. Take precautions to ensure system cleanliness when removing and reinstalling system lines

System noise or vibration

Item	Description	Action
Reservoir oil level	Low oil level leads to cavitation.	Fill reservoir.
Aeration of the oil/pump inlet vacuum	Air in system decreases efficiency of units and controls. Air in system is indicated by excessive noise in pump, foaming in oil, and hot oil.	Find location where air is entering into the system and repair leak. Check that inlet line is not restricted and is the proper size.
Cold oil	If oil is under cold conditions, it may be too viscous for proper function and pump cavitates	Allow the oil to warm up to it's normal operating temperature with engine at idle speed.
Pump inlet vacuum	High inlet vacuum causes noise/cavitation.	Check that inlet line is not restricted and is the proper size. Check filter and bypass valve.
Shaft couplings	A loose shaft coupling will cause excessive noise.	Replace loose shaft coupling. Replace pump shaft.
Shaft alignment	Misaligned shafts creates noise	Align shafts.
Charge/system relief valves	Unusual noise may indicate sticking valves. Possible contamination.	Clean/replace valves and test pump. May be a normal condition.

System operating hot

Item	Description	Action
Oil level in reservoir	Insufficient hydraulic fluid will not meet the cooling demands of system.	Fill the reservoir to the proper level with clean hydraulic oil.
Heat exchanger (if equipped)	The heat exchanger is not sufficiently cooling the system.	Check the air flow and input air temperature for the heat exchanger. Clean, repair, or replace the heat exchanger as necessary.
Bypass valve	A partially activated bypass valve may result in heat generation within the system.	Verify that the bypass valve is fully closed and that the valve is seating properly. Repair or replace it as necessary.
SCR (System Check / Relief) Valves	A partially activated SCR valve or SCR valves with relief settings too low may result in heat generation within the system.	Verify that the SCR valve is seating properly and is at the correct relief setting. Repair or replace it as necessary.

Troubleshooting

Item	Description	Action
Oil filters	Clogged oil filters may result in an insufficient supply of cool oil to the system.	Inspect the oil filters and verify that they are still operable. Replace them if necessary.
Machine load	Excessive loads or extreme duty cycles could result in the pump and / or motor operating at speeds and pressures beyond system design limitations.	Verify that the machine is operating within the parameters for which it was designed. If necessary, reduce the load on the machine.

System will not operate in one direction

Item	Description	Action
Input control signal (linkage, current, or pressure)	A faulty control signal is being received at the pump. (MDC - binding or broken linkage, EDC - faulty or inadequate electrical signal, HDC - blocked or incorrectly orificed control lines)	Verify that the input signal being received is correct and identical in both directions. Adjust, clean, repair, or replace the control module as necessary.
SCR (system check / relief) valves	The SCR valves are malfunctioning or improperly set.	Verify that the SCR valves are operating properly. Repair or replace them as necessary.
Pump control	A damaged or biased pump control may be sending a signal commanding the pump to stroke only in one direction.	Verify that the pump's control is functioning properly. Repair or replace it as necessary.
Servo pressure	The drain or supply path to one side of the servo piston may be blocked.	Verify that the servo supply and drain paths are unobstructed and that each orifice is of the correct size and free of debris. Clean or repair them as necessary.
Displacement limiters (if equipped)	The displacement limiters may be improperly adjusted such that the servo piston is prevented from moving in one direction.	Verify that the displacement limiters are adjusted properly.

System will not operate in either direction

Item	Description	Action
Oil level in reservoir	There is insufficient hydraulic fluid to supply the system loop.	Fill the reservoir to the proper level with clean hydraulic oil.
Input control signal (linkage, current, or pressure)	A faulty control signal being received at the pump. (MDC - binding or broken linkage, EDC - faulty or inadequate electrical signal, HDC - blocked or incorrectly orificed control lines)	Verify that the input signal being received is correct and identical in both directions. Adjust, clean, repair, or replace the input device as necessary.
Oil filters	Clogged oil filters may result in an insufficient supply of oil to the system.	Inspect the oil filters and verify that they are still serviceable. Replace them as necessary.
Bypass valve	A partially activated bypass valve may result in a cross port leakage.	Verify that the bypass valves are closed and that the valves are seating properly. Clean, repair, or replace them as necessary.
Charge pressure (in neutral)	Charge pressure may be insufficient to recharge the system loop.	Inspect the charge pump for damage and verify that the charge pressure relief valve is at the proper setting. Repair or replace it as necessary.
Charge pressure (in stroke)	There is low charge pressure resulting from internal leakage within the system.	Repair or replace the component or components within the system causing the internal leakage.
Servo pressure	There is an insufficient pressure differential across the servo piston.	Check servo pressures to verify sufficient pressure delta. Verify that the servo supply and drain paths are unobstructed and that each orifice is of the correct size and free of debris. Clean, repair, or replace them as necessary.
Charge pump	The charge pump is damaged or has been installed with the incorrect rotational orientation.	Verify that the charge pump is in good working order and that it is correctly installed. Repair or replace it as necessary.

Troubleshooting

Item	Description	Action
SCR (system check / relief) valves	The SCR valves are malfunctioning or improperly set.	Verify that the SCR valves are operating and properly set. Repair or replace them as necessary.
Displacement limiters	Displacement limiters may be improperly adjusted such that the servo piston is locked in place.	Verify that the displacement limiters are adjusted to the proper setting.

Neutral difficult or impossible to find

Item	Description	Action
Input control signal (linkage, current, or pressure)	A faulty control signal is being received at the pump. (MDC - binding or broken linkage, EDC - faulty or inadequate electrical signal, HDC - blocked or incorrectly orificed control lines)	Verify that the input signal being received is correct and identical in both directions. Adjust, clean, repair, or replace control module as necessary.
System pressure	With no input signal to the control, a pressure delta may exist between the two sides of the working loop.	Readjust pump neutral setting. Refer to *Swashplate neutral adjustment* on page 23.
Servo pressure	With no input signal to the control, a pressure delta may exist across the servo piston.	Readjust the control neutral setting. Refer to *Manual Displacement Control Bracket Neutral Adjustment* on page 24 and *Electronic Displacement Control/Hydraulic Displacement Control Neutral Adjustment* on page 25
PCP pressure (EDCs only)	With no input signal to the control, a pressure difference may exist across the control spool.	Replace the EDC.

System response is sluggish

Item	Description	Action
Reservoir oil level	There is an insufficient amount of hydraulic fluid, resulting in an inadequate supply for the system loop.	Fill the reservoir to the proper level with clean hydraulic fluid.
Input control signal (linkage, current, or pressure)	A faulty control signal is being received at the pump. (MDC - binding or broken linkage; EDC - faulty or inadequate electrical signal; HDC - blocked or incorrectly orificed control lines)	Verify that the input signal being received is correct and identical in both directions.
Pump control	A damaged pump control or control spool will not correctly transmit the control input signal to the pump.	Verify that the pump's control is operating properly and that the control spool is not damaged or worn and moves freely within its bore. Clean, repair, or replace it as necessary.
Bypass valve	A partially activated bypass valve will cause cross port leakage.	Verify that the bypass valve is closed and that the valve is seating properly. Clean, repair, or replace it as necessary.
SCR (system check / relief) valves	One or both of the SCR valves may be binding within their bores.	Verify that the SCR valves operate freely. Repair or replace them as necessary.
Charge pressure (in neutral)	There is low charge pressure resulting from a damaged charge pump or low charge pressure relief valve setting.	Inspect the charge pump for damage and verify the charge pressure relief valve setting. Repair or replace it as necessary.
Charge pressure (in stroke)	There is low charge pressure resulting from internal leakage within the system.	Repair or replace the component or components within the system causing the internal leakage.

Troubleshooting

Item	Description	Action
Servo pressure	There is insufficient pressure differential across the servo piston.	Check servo pressures at port M4 and M5 to verify sufficient pressure delta. Verify that the servo supply and drain paths are unobstructed and that each orifice is of the correct size and free of debris. Clean, repair, or replace as necessary.
Charge pump	The charge pump has been damaged or installed with the incorrect rotational orientation.	Verify that the charge pump is in good working order and that it is correctly installed. Repair or replace it as necessary.

Electrical troubleshooting

Item	Description	Action
Control operates pump in one direction only	Control coil failure	Measure resistance at coil pins. Resistance should be 14.20 ohms (24V) or 3.66 ohms (12V) at 20°C [70°F]. Replace coil
No pump function	No power to controller	Restore power to controller
Erratic pump function	Electrical connection to pump is bad	Disconnect connection, check wires, reconnect wires
Filter bypass indicator switch	Filter switch may be bad	Check/replace filter switch. Add gauge to filter bypass port to verify proper fluid flow and verify switch operation by measuring resistance. open resistance=510 ohms, closed resistance=122 ohms

Adjustments

Standard procedures, inspections, and adjustments

Caution

Contamination can damage internal components and void the manufacturer's warranty. Take precautions to ensure system cleanliness when removing and reinstalling system lines

1. With the prime mover off, thoroughly clean all dirt and grime from the outside of the pump.
2. If removing the pump, tag each hydraulic line connected to the pump. If hydraulic lines are disconnected, plug each open port, to ensure that dirt and contamination do not get into the pump.
3. Ensure the surrounding areas are clean and free of contaminants such as dirt and grime.
4. Inspect the system for contamination.
5. Look at the hydraulic fluid for signs of system contamination, oil discoloration, foam in the oil, sludge, or small metal particles.
6. Drain and flush the hydraulic system and replace all filters.
7. Before re-installing the pump, perform a leakage test per Sauer-Danfoss leakage test HPP 112.

Warranty

Performing installation, maintenance, and minor repairs according to the procedures in this manual will not affect your warranty. Major repairs, requiring the removal of a unit's rear cover or front flange, voids the warranty unless done by a Danfoss Global Service Partner.

Pump adjustment

This section offers instruction on inspection and adjustment of pump components. Read through the entire topic before beginning a service activity. Refer to *Pressure measurements* on page 13, for location of gauge ports and suggested gauge size.

Charge pressure relief valve

The following procedure explains how to check and adjust the charge pressure relief valve.

1. Shut down prime mover.
2. Install a 50 bar [1000 psi] pressure gauge in charge pressure gauge port M3. Install a 10 bar [100 psi] gauge in one of the case pressure ports L1 or L Operate the system with the pump in neutral (zero displacement) to measure charge pressure.

   Measure charge pressure at 1775 RPM. Charge pressure is found by subtracting case pressure from the pressure measured at the charge pressure gage port M3.
3. To adjust charge pressure, shut down prime mover.
4. Using a 1 inch hex wrench, remove charge pressure relief plug (102). Add or remove shims (101) in relief valve. Adding shims (101) increases charge pressure, while removing shims decreases charge pressure. Refer to pump model code for the unit's proper charge pressure setting.
5. Lubricate and install new O-ring O-ring (103).
6. Using a 1 inch hex wrench, reinstall plug (102). Torque to 108 Nm [80 ft•lb].
7. Operate pump in neutral to verify proper operation.

Adjustments

8. Remove gages. Operate pump and check for leaks.

Charge pressure adjustment

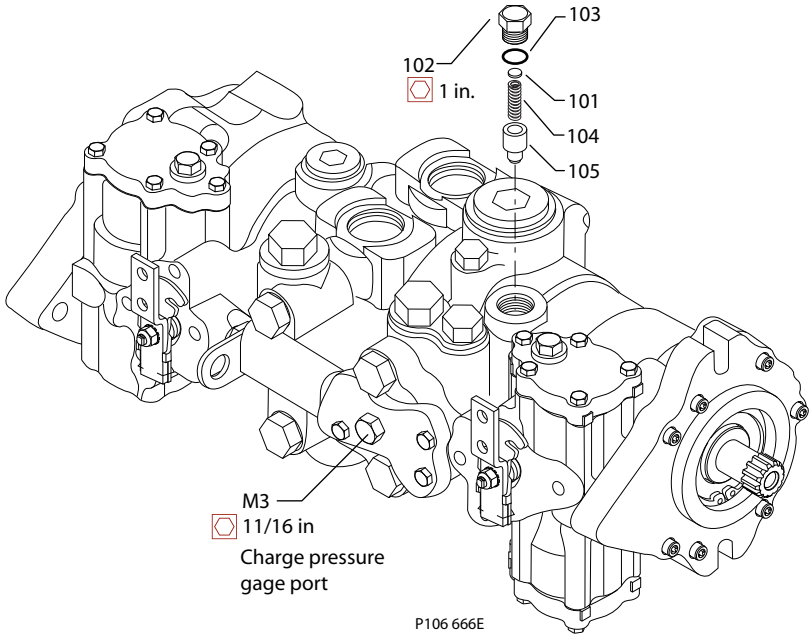

Engaging the bypass function

Test bypass function with pump installed on machine. The bypass function is engaged by unscrewing the bypass valve. Do not open the bypass valve when machine is operating.

1. To engage the bypass function, use a 5/8 hex wrench to unscrew the bypass valve. Rotate the bypass valve approximately three turns counterclockwise. Do not rotate more than 3 revolutions, as additional rotation will permit external leakage.
2. To close the bypass valve, rotate the bypass valve clockwise until seated. Torque to 20 N•m [15 lbf•ft].
3. If machine is towable with bypass valve opened three turns, and if wheels are locked (not towable) with bypass valve closed, bypass function is working correctly.

Caution

Avoid excessive speeds and extended load/vehicle movement. Do not move the load or vehicle more than 20 % of maximum speed or for more than 3 minutes. Damage to drive motor(s) is possible.

Adjustments

Using the bypass function

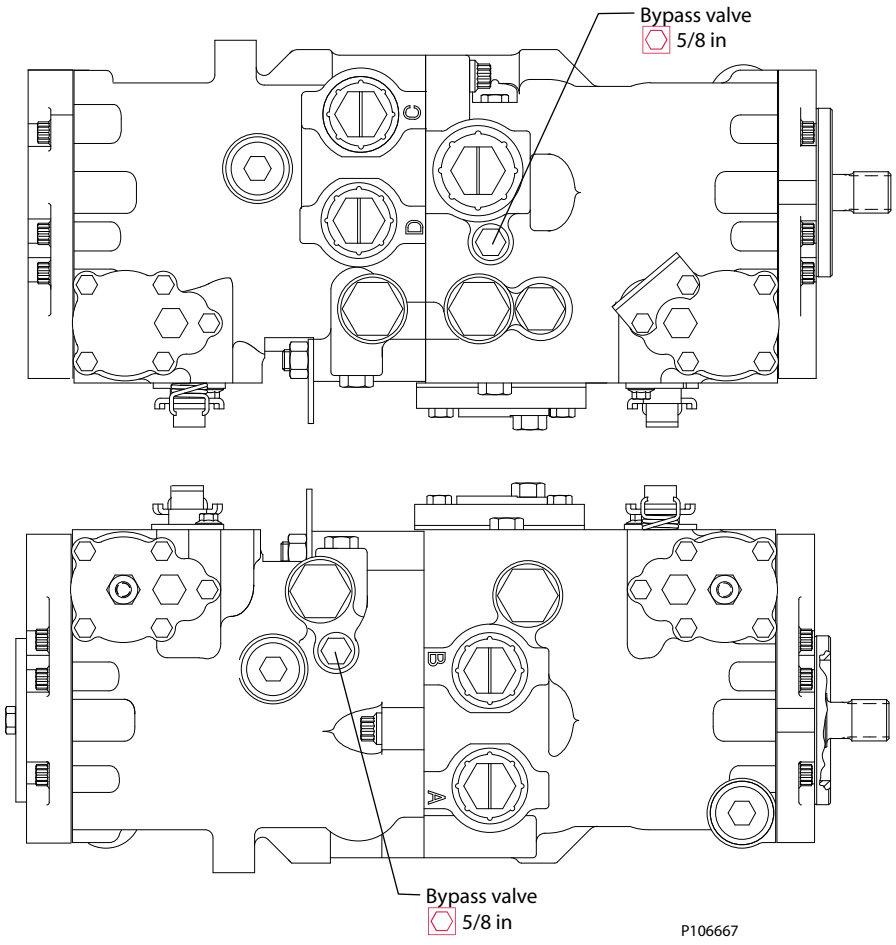

System check/relief (SCR) valves

The SCR valve is a high pressure relief valve and a system check valve in combination. Whenever an SCR valve has been replaced or opened, the pump should be operated in its full range of functions to ensure proper machine operation. The SCR valves are pre-set at the factory, no adjustment is possible. Pressure code is marked on the valve (1103). Refer to the model code for pressure designation. If SCR malfunction is suspected, replace valve and test operation of pump.

To adjust max. system pressure, replace SCR valve with one set for the desired pressure setting.

The following procedure explains how to replace the SCR valves.

1. Shut down the system.
2. Using a 1-1/4 hex wrench, remove relief valve plug (166).
3. Remove spring (165) and relief valve (1103) from pump housing.
4. Insert new relief valve (1103) and spring (165) into pump housing.
5. Replace O-ring (106). Lubricate new O-ring before installation.

Adjustments

6. Using a 1-1/4 hex wrench install relief valve plug (166). Torque to 174 Nm [128 ft•lb].

Adjusting the HPRV's

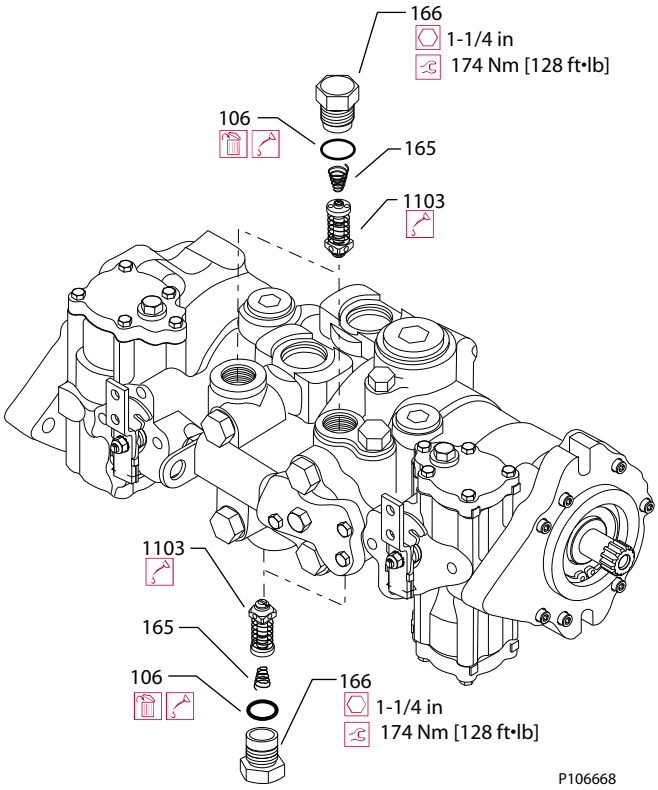

Displacement limiter adjustment

Pump may have a displacement limiter on each side of the servo. Each limiter may be adjusted to a different setting.

1. Remove snap ring (928) and sleeve (929).
2. Hold the adjusting screw (913) in place using a flat screw driver. Use a 9/16 hex wrench to loosen the locking nut (927).
3. Rotate the displacement limiter (913) based on the table below. Rotating the adjusting screw clockwise decreases the maximum displacement of the pump while rotating the adjusting screw counterclockwise increases the maximum displacement.
4. After establishing the desired maximum displacement setting, hold displacement limiter in place using a flat screw driver and tighten the locking nut using a 9/16 hex wrench. Torque locking nut to 19 N•m [14 lbf•ft].

Adjustments

5. One full turn of the adjusting screw will change the maximum displacement approximately as shown in the table below.

Displacement limiter adjustment

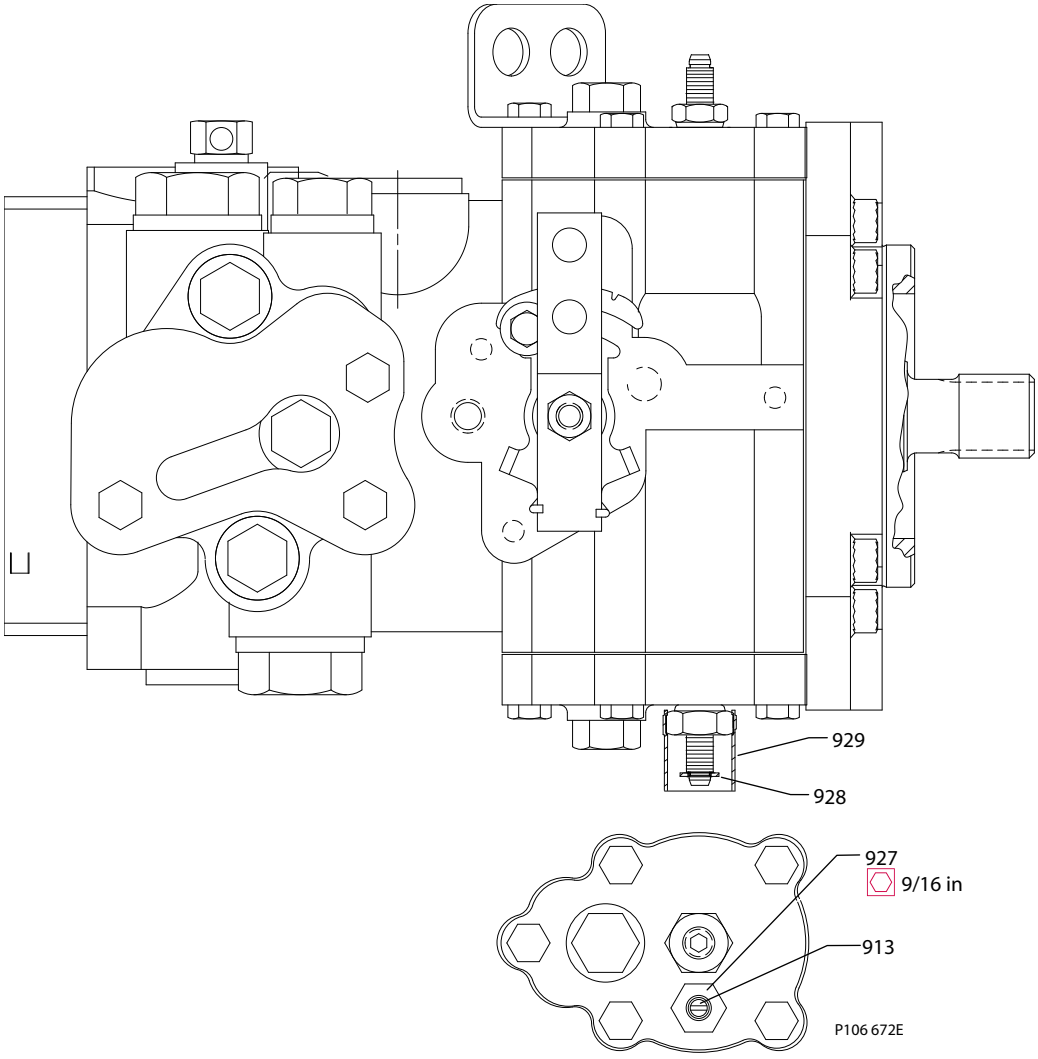

Displacement limiter adjustment data

Displacement limiter adjustment data

Displacement	Locknut wrench size and torque	Adjusting screw size	Approximate displacement change per revolution of adjusting screw
46	9/16 19 N•m [14 lbf•ft]	Flat screw driver	4.1 cc / turn

Swashplate neutral adjustment

With the pump properly plumbed, primed and mounted on a vehicle or test stand, use the following procedure to adjust the pump to mechanical neutral. If pump is on a vehicle, block the wheels to prevent movement.

Adjustments

Measured data

- System pressure at MA or MC
- System pressure at MB or MC
- Pressure differential between MA and MB or MC and MD (optional)

Pump Setup

1. Attach 600 bar [10,000 psi] gauge to system pressure gage ports MA and MB or MC and MD
2. Using a hydraulic line and fittings, connect servo pressure ports (M4 and M5).

   Connecting servo ports M4 and M5 removes the effects of any control pressure on the servo piston by creating zero pressure differential between the two sides of the servo.

3. Using a 1/4 hex wrench and a 9/16 hex wrench, loosen servo lock nut (2115).
4. Using a 1/4 hex wrench, turn neutral adjustment screw (908) until one system pressure gage begins to show an increase in pressure. Turn the neutral adjustment screw (908) in the opposite direction until the other system pressure gage begins to show an increase in pressure. Turn the neutral adjustment screw half way between the two positions.
5. Using a 1/4 hex wrench to hold the servo adjustment screw in place, and a 9/16 hex wrench, tighten servo lock nut (2115). Torque to 37 Nm [27 ft•lb].

Servo neutral adjustment

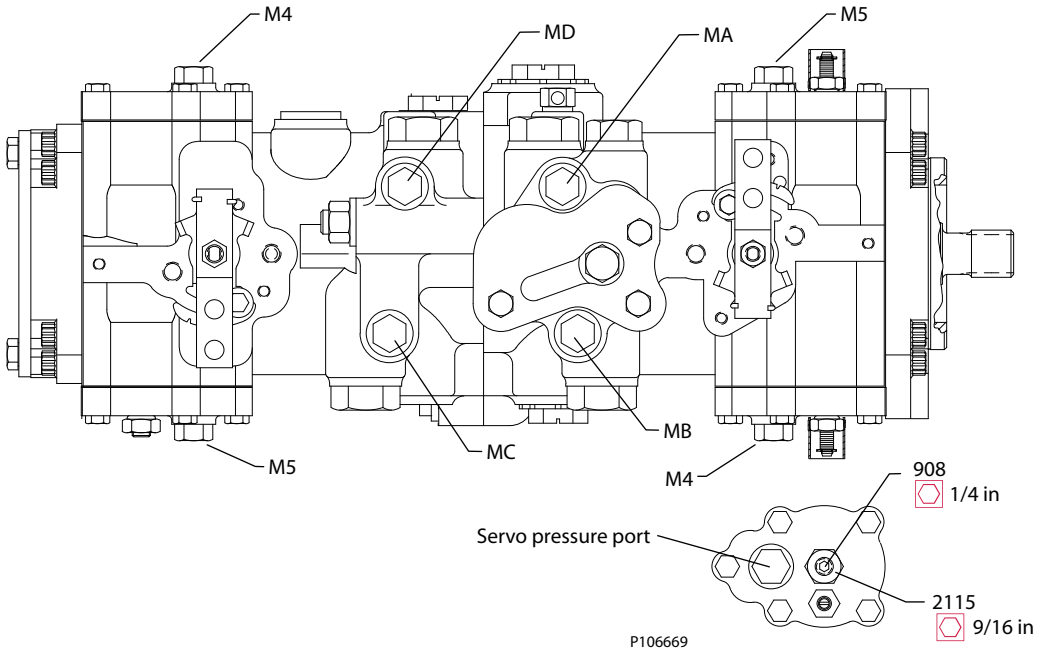

Manual Displacement Control Bracket Neutral Adjustment

With the pump properly plumbed, primed and mounted on a vehicle or test stand, use the following procedure to adjust the pump displacement control to neutral position. If pump is on a vehicle, block the wheels to prevent movement. Check swashplate neutral adjustment before adjusting control bracket. If swashplate neutral is properly adjusted and system is not in neutral, adjust MDC bracket as described below.

Adjustments

Verify swashplate neutral adjustment (see *Swashplate neutral adjustment* on page 23) before performing control neutral adjustment.

Measured data

- Servo pressure at M4
- Servo pressure at M5
- Pressure differential between M4 and M5 (optional)

Procedure

1. Attach 20 bar [300 psi] gauge to each servo gage port.
2. Using a 3/8 hex wrench, loosen screw (1210) to allow the neutral adjustment bracket to move, but not freely.
3. Start prime mover and slowly accelerate to normal operating RPM.
4. Using your hand, press neutral adjustment bracket towards the pump housing, and rotate adjustment bracket until both servo gages read equal pressures. Rotate adjustment bracket until one of the servo pressure gages indicates an increase in pressure. Rotate adjustment bracket in opposite direction until the other servo pressure gage indicates an increase in pressure. Rotate neutral bracket until it is half way between the two positions.
5. While holding the neutral adjustment bracket in place, use a 3/8 hex wrench to tighten screw (1210). Torque to 14 Nm [10 ft•lb].

Manual displacement control bracket adjustment

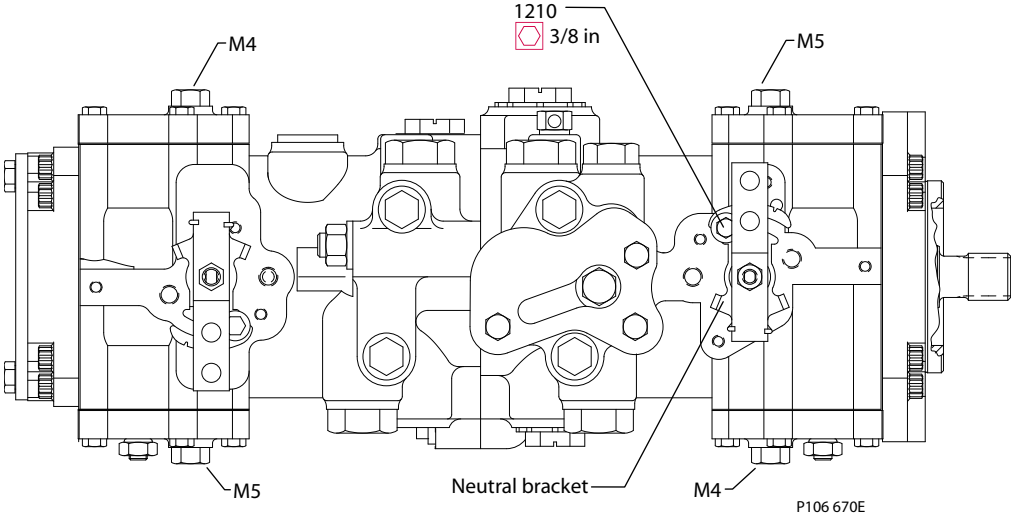

Electronic Displacement Control/Hydraulic Displacement Control Neutral Adjustment

With the pump properly plumbed, primed and mounted on a vehicle or test stand, use the following procedure to adjust the pump displacement control to neutral position. If pump is on a vehicle, block the wheels to prevent movement.

Verify swashplate neutral adjustment (see *Swashplate neutral adjustment* on page 23) before performing control neutral adjustment.

Adjustments

Measured data

- Servo pressure at M4 (refer to *Port locations and gauge installation* on page 13)
- Servo pressure at M5 (refer to *Port locations and gauge installation* on page 13)
- Pressure differential between M4 and M5 (optional)

Procedure

1. Attach 20 bar [300 psi] gauge to each servo gage port.
2. Use a 5/32 internal hex wrench to hold the adjusting screw in place.
3. Using a 1/2 hex wrench, loosen locknut.
4. Start prime mover and slowly accelerate to normal operating RPM.
5. Rotate adjustment screw until both servo gages read equal pressures. Rotate adjustment screw until one of the servo pressure gages indicates an increase in pressure. Rotate adjustment screw in opposite direction until the other servo pressure gage indicates an increase in pressure. Rotate adjustment screw until it is half way between the two positions.
6. While holding the neutral adjustment screw in place, tighten locknut. Torque to 3 Nm [27 in•lb].

EDC-HDC control adjustment

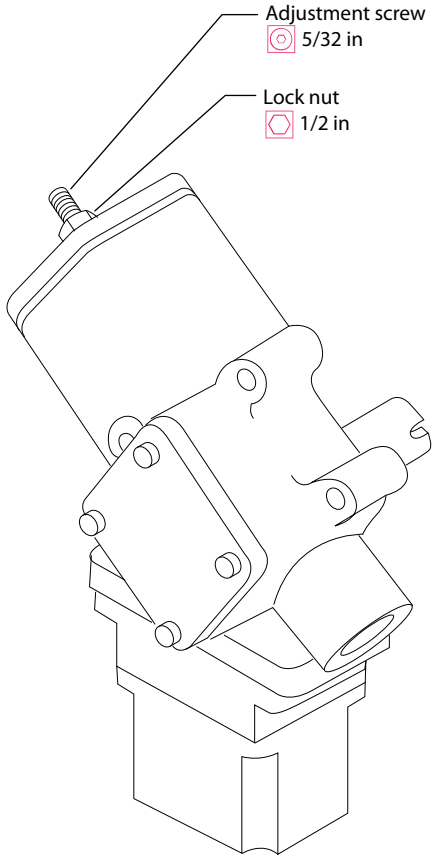

Minor repair

Standard procedures, removing the pump

Before working on the pump, clean all dirt and grime from the outside of the pump. If the pump has an auxiliary pump attached, remove all pumps as a single unit.Tag all hydraulic lines as they are disconnected and plug all open ports, to ensure that dirt and contamination do not get into the pump.

Caution

Contamination can damage internal components and void the manufacturer's warranty. Take precautions to ensure system cleanliness when removing and reinstalling system lines.

Removal

1. With the prime mover off, thoroughly clean all dirt and grime from the outside of the pump.
2. Tag and disconnect each hydraulic line connected to the pump. As hydraulic lines are disconnected, plug each open port, to ensure that dirt and contamination do not get into the pump.
3. Remove the tandem pump and its auxiliary pump (if applicable) as a single unit.

   Caution

   Be careful not to damage solenoids and electrical connections when using straps or chains to remove pump from machine.

Inspection

1. Ensure the work surface and surrounding area are clean and free of contaminants such as dirt and grime.
2. Look at the hydraulic fluid for signs of system contamination, oil discoloration, foam in the oil, sludge, or small metal particles.

Reassembly

1. Before replacing the pump on the machine, replace all filters and drain the hydraulic system. Fill the system with the correct hydraulic fluid.
2. Flush the lines before replacing the hydraulic fluid.

   For repair part information, see Danfoss publication Series 40 M46 Variable Pump Parts Manual BLN-2-41702 for your model.

Displacement limiter

Removal

1. Remove snap ring (928) and sleeve (929). Use a 1/4 hex wrench to hold neutral adjustment screw in place. Use a 9/16 hex wrench to remove hex nut (2115).
2. Use a flat screw driver to hold displacement limiter in place. Use a 9/16 hex wrench to remove lock nut (927).

   Mark the location of displacement adjustment and neutral adjustment screws before disassembly. This will save time during re-assembly.
3. Using a 3/8 hex wrench, remove five bolts (921) from servo cover (902).
4. Turn servo cover (902) counter clockwise to remove it from neutral adjustment screw. Remove and discard gasket (2161).
5. Turn displacement limiter (913) out of servo cover (902).

Minor repair

Inspection

Inspect all parts for damage. Inspect the mating surfaces of the servo cover (902) and motor housing for scratches, grooves, and other damage. Inspect threads of screws and nuts for damage. Replace any damaged parts.

Reassembly

1. Turn displacement limiter (913) into servo cover (902). Install new gasket (936) and turn servo cover (902) onto neutral adjustment screw.
2. Using a 3/8 hex wrench, install five bolts (921). Torque to 15•Nm [11 lb•ft].
3. Use a flat screw driver to hold displacement limiter. Use a 9/16 hex wrench to install seal nut (927) onto displacement limiter (913) at the position noted during disassembly. Torque to 19 N•m [14 lb•ft]. Install sleeve (929) and snap ring (928).
4. Using a 1/4 hex wrench to hold neutral adjustment screw and a 9/16 hex wrench, install hex nut (2115) onto neutral adjustment screw at the position noted during disassembly. Torque to 37 N•m [27 ft•lb].

Displacement limiter removal-installation

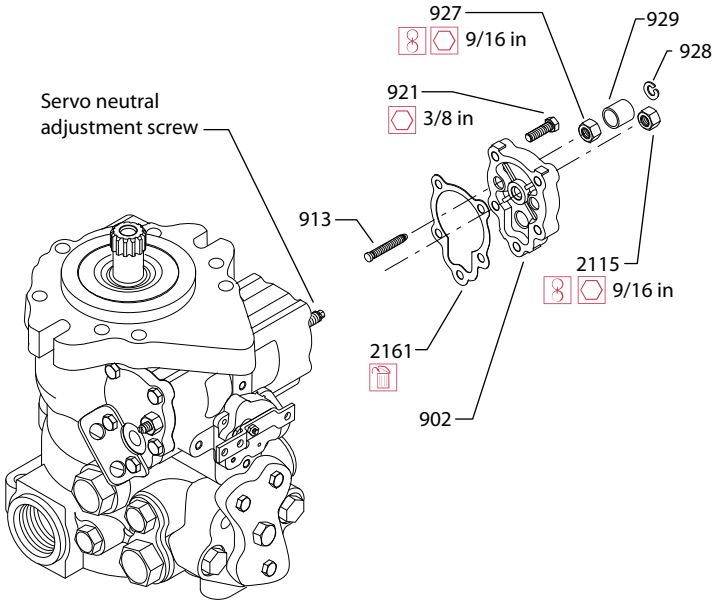

Pressure filtration adapter

Removal

1. Using a 11/16 hex wrench, remove plug (810). Remove and discard O-ring (810A).
2. Using a 1/2 in hex wrench, remove bolts (806).
3. Remove pressure filtration cover (801). Remove and discard gasket (805).

Minor repair

Inspection

Inspect the machined surface on the control. If any nicks or scratches are found, replace the damaged component.

Reassembly

1. Install new gasket (805) and filtration cover (801).
2. Using a 1/2 hex wrench, install three bolts (806). Torque to 30 Nm [22 ft•lb].
3. Lubricate and install O-ring (810A) onto plug (810). Using a 11/16 hex wrench, install plug (810). Torque to 37 Nm [27 ft•lb].

Pressure filtration adapter removal/installation

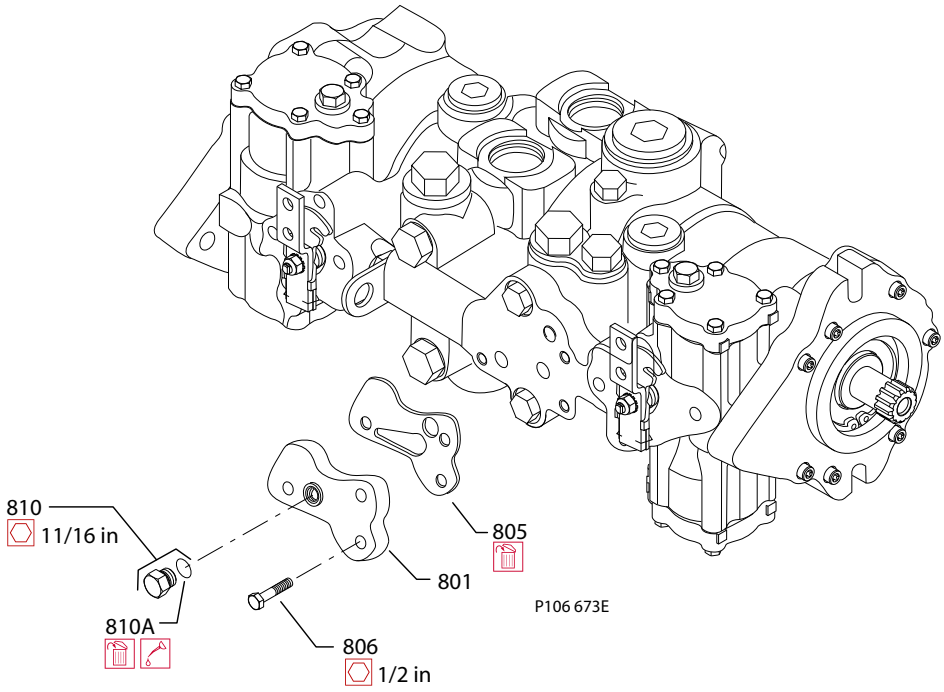

Charge pump

If the pump has an auxiliary pump attached, remove the auxiliary pump and connecting shaft before removing the auxiliary pad.

Removal

1. Using a 3/4 hex wrench remove nut (2144). Remove bracket (2146).
2. Using a 1/2 12 point hex wrench, remove bolts (2147). Pull to separate front and rear pump housings.
3. Unthread tie rod (2145).
4. Remove and discard O-rings (2407, 2408, and 2150).
5. Remove gerotor cover (2304) and gerotor (2403).
6. Remove pin (2404), coupling (2142), and pin (2405).

Note the location of pin (2404) for reassembly. It can be assembled for right hand or left hand pump rotation.

Minor repair

Charge pump removal

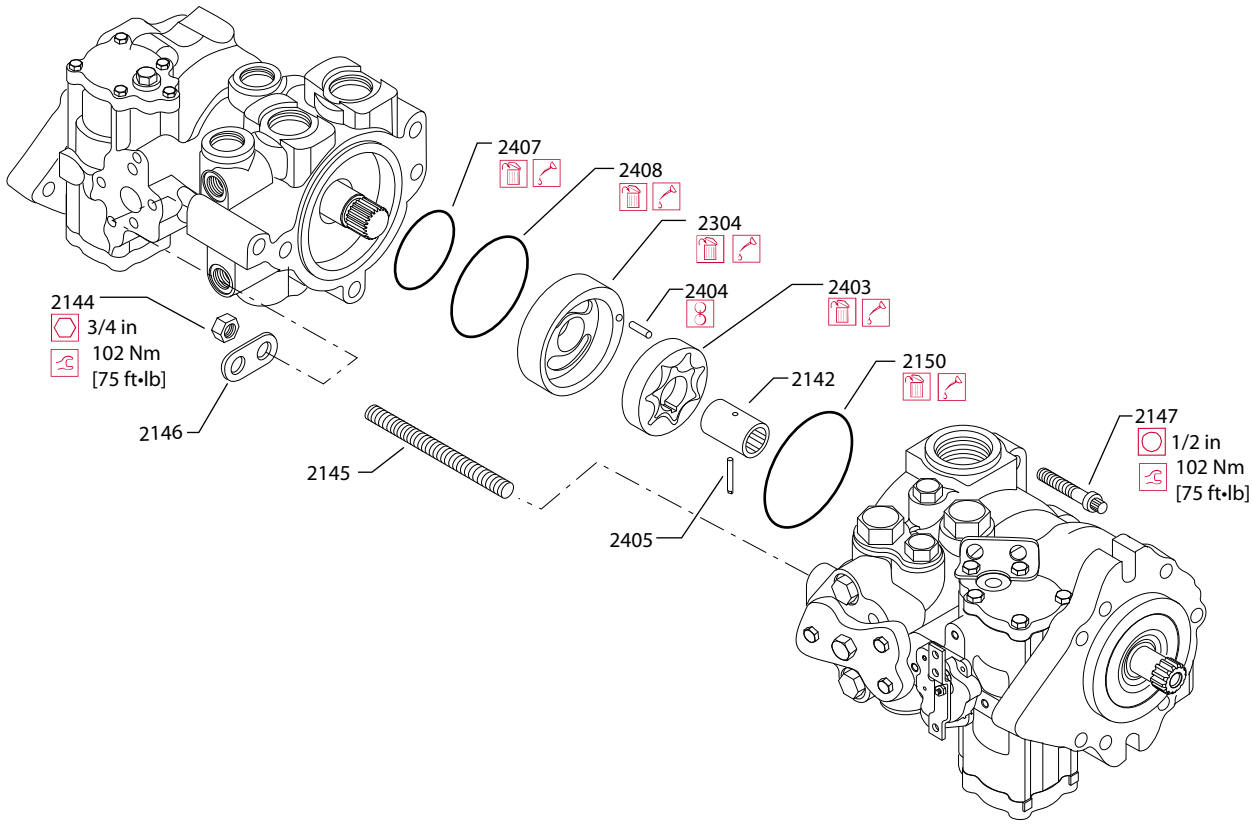

Inspection

Inspect the gerotor (2403) and gerotor cover (2304) for wear, scratches or pitting. If any component shows signs of wear, scratching, or pitting, replace all damaged components. Inspect pin (2404) and key (2405) for damage, and replace parts if necessary. Replace O-ring (2407, 2408, 2150) whenever charge pump is disassembled.

Reassembly

1. Install pin (2405) into coupling (2142). Install coupling (2142) into gerotor (2403) with pin (2405) aligned in groove.
2. Install coupling onto shaft of front pump.
3. Install pin (2404) into front pump housing and gerotor cover (2304) onto gerotor (2403).
4. Lubricate and install O-rings (2407, 2408, and 2150).
5. Thread tie rod (2145) into front pump housing.
6. Mate two pumps together to install rear pump shaft into coupling (2124). Using a pipe wrench or pliers, rotate front pump shaft to align coupling with rear pump shaft and then push two pump housings together. Use a rubber mallet if necessary.

   Position the pumps vertically with the front housing on top of the rear housing to make alignment easier.
7. Using a 1/2 12 point hex wrench, install bolts (2147). Torque to 102 Nm [75 ft•lb].
8. Install bracket (2146). Using a 3/4 hex wrench install nut (2144). Torque to 102 Nm [75 ft•lb].

Minor repair

Shaft seal

The shaft assembly is serviceable without removing the front cover of the pump. Orient the pump on the work surface so the shaft is pointing up.

Removal

1. Using a snap-ring pliers, remove snap-ring (2132) from pump cover.
2. Using a sharp instrament (like a screw driver)or a slide hammer type puller remove the shaft seal (301).

Caution

Do not damage the housing bore, shaft or bearing when removing the shaft seal.

Shaft assembly

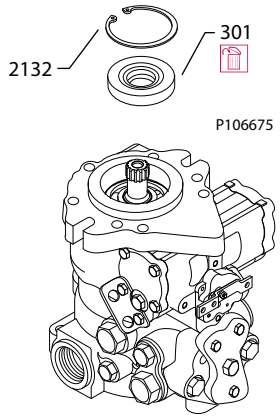

Inspection

Inspect the shaft and bearing for wear, scratching and pits. If wear, scratching or pitting is found, replace the shaft and bearing.

Reassembly

1. Press new seal (301) into pump cover.

Minor repair

2. Install Snap-ring (2132) using a snapring pliers.

Shaft seal installation tool

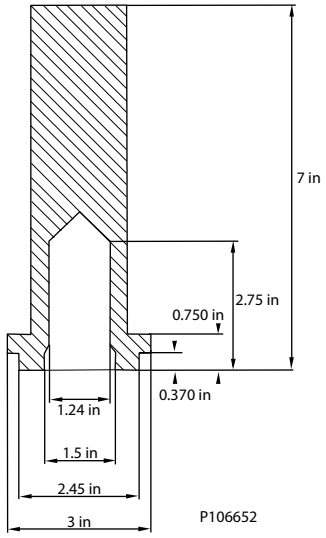

SCR valves

The SCR valves are factory set and are not field adjustable.

Removal

1. Using a 1-1/4 hex wrench, remove relief valve plug (166). Remove and discard O-ring (106).
2. Remove spring (165) and relief valve (1103) from pump housing.

Inspection

Inspect the sealing surfaces of the pump for nicks or scratches. Inspect the relief valve (1103) sealing surface for nicks or scratches. If the relief valve (1103) is damaged, replace it.

Reassembly

1. Lubricate and insert relief valve (1103) and spring (165) into pump housing.

Minor repair

2. Lubricate and install new O-ring (106) onto plug (166). Using a 1-1/4 hex wrench install relief valve plug (166). Torque to 174 Nm [128 ft•lb].

High pressure relief valves

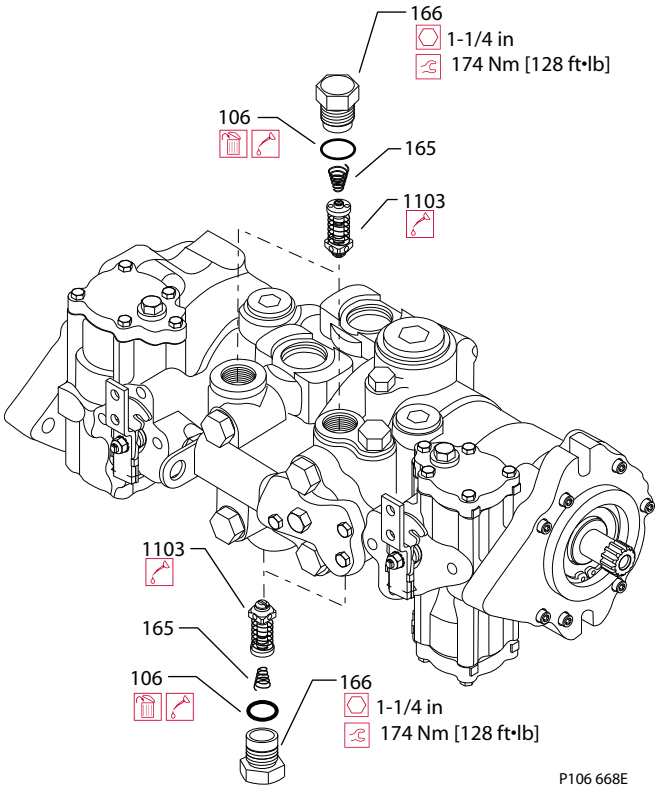

Charge pressure relief valve

Replace the charge pressure relief valve components if they are damaged or otherwise suspected of failure. See *Charge pressure relief valve* on page 19, for adjustment instructions.

Removal

1. Using a 1 inch hex wrench, remove charge pressure relief plug (102). Remove and discard O-ring (103).
2. Remove shims (101), spring (104), and charge pressure relief valve (105).

Inspection

Inspect the sealing surfaces of the pump for nicks or scratches. Inspect the relief valve (105) sealing surface for nicks or scratches. If the relief valve (105) is damaged, replace it.

Reassembly

1. Install charge pressure relief valve (105), spring (104), and shims (101).
2. Lubricate and install O-ring (103) onto plug (102). Using a 1 inch hex wrench, install plug (102). Torque to 108 Nm [80 ft•lb].

Minor repair

3. Operate pump at full range of controls to ensure proper machine operation.

Charge pressure relief valve

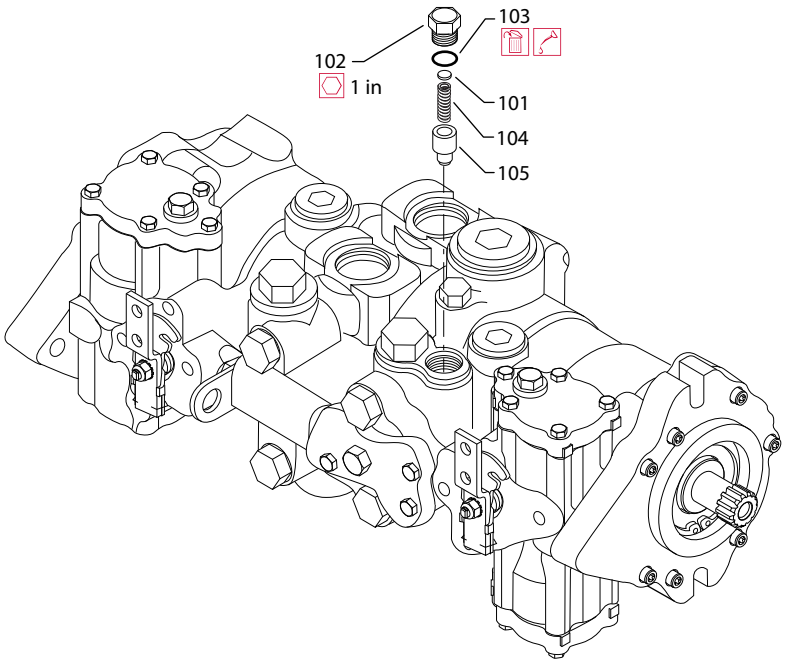

Bypass valve

Removal

1. Using a 5/8 hex wrench, remove bypass valve (1001).
2. Remove and discard O-ring (1003) and seal (1002).

Inspection

Inspect the sealing surfaces of the pump for nicks or scratches. Inspect the bypass valve (1001) sealing surface for nicks or scratches. Replace any damaged parts.

Reassembly

1. Lubricate and install new O-ring (1003) and seal (1002) onto bypass valve (1001).
2. Using a 5/8 hex wrench, install bypass valve (1001). Torque to 20 Nm [15 ft•lb].

Minor repair

3. Operate pump at full range of controls to ensure proper machine operation.

Bypass valve

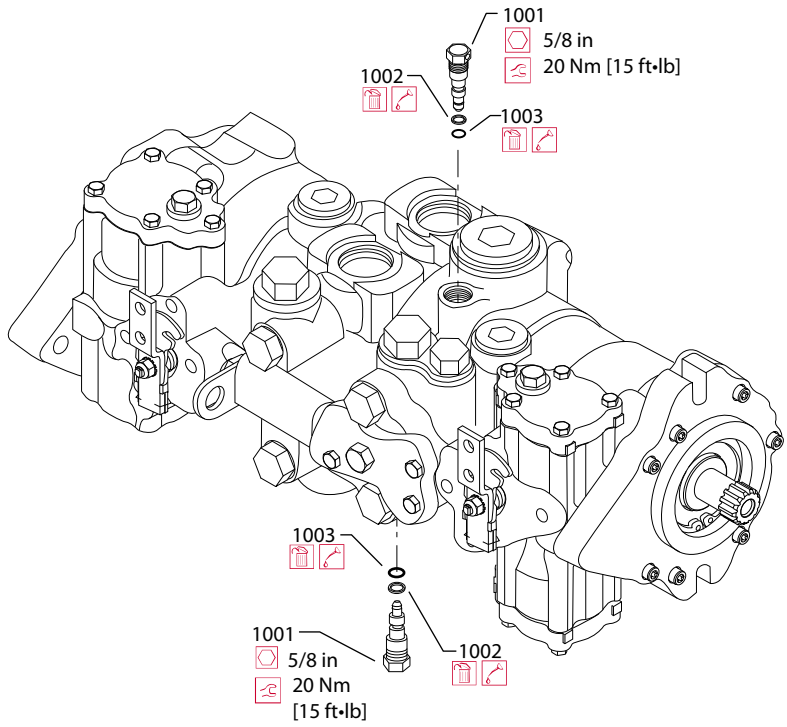

Manual displacement control

Removal

1. Using a 3/8 hex wrench, remove screw (1210). Remove manual control spool assembly from pump housing.
2. Using a 1/2 hex wrench, remove lock nut (1213). Remove tooth lock washer (1235), handle (1215), neutral return bracket (1216), and spring (1214) from spool (1207).

   Mark the location of neutral return bracket (1216) before disassembly.
3. Remove and discard backup ring (1209) and O-ring (303) from spool (1207).
4. Remove sleeve (1402). Remove and discard backup ring (1208) and O-ring (302).

Inspection

Inspect all parts of control assembly. Replace any damaged parts. Inspect spools for grooves, scratches, and other damage. If spools are damaged, replace them. Inspect sleeve bore in housing for damage.

Reassembly

1. Lubricate and install O-ring (302) and backup ring (1208) onto sleeve (1402). Lubricate and install sleeve (1402) into motor housing.

   When installing sleeve (1402), ensure that sleeve groove engages spring pin on swashplate
2. Lubricate and install O-ring (303) and backup ring (1209) onto spool (1207).

Minor repair

3. Install neutral return spring (1214), neutral return bracket (1216), handle (1215), and washer (1235) onto spool (1207).

   Install control spool (1207) with alignment slot facing servo piston.

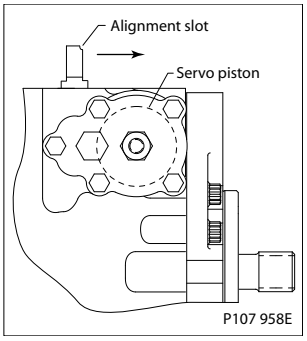

4. Using a 1/2 hex wrench, install lock nut (1213). Torque to 15 Nm [11 ft•lb].
5. Lubricate and install spool (1207) into sleeve (1402).
6. Using a 3/8 hex wrench, install screw (1210). Torque to 14 Nm [10 ft•lb]. See *Manual Displacement Control Bracket Neutral Adjustment* on page 24, for adjustment procedure.

Manual displacement control

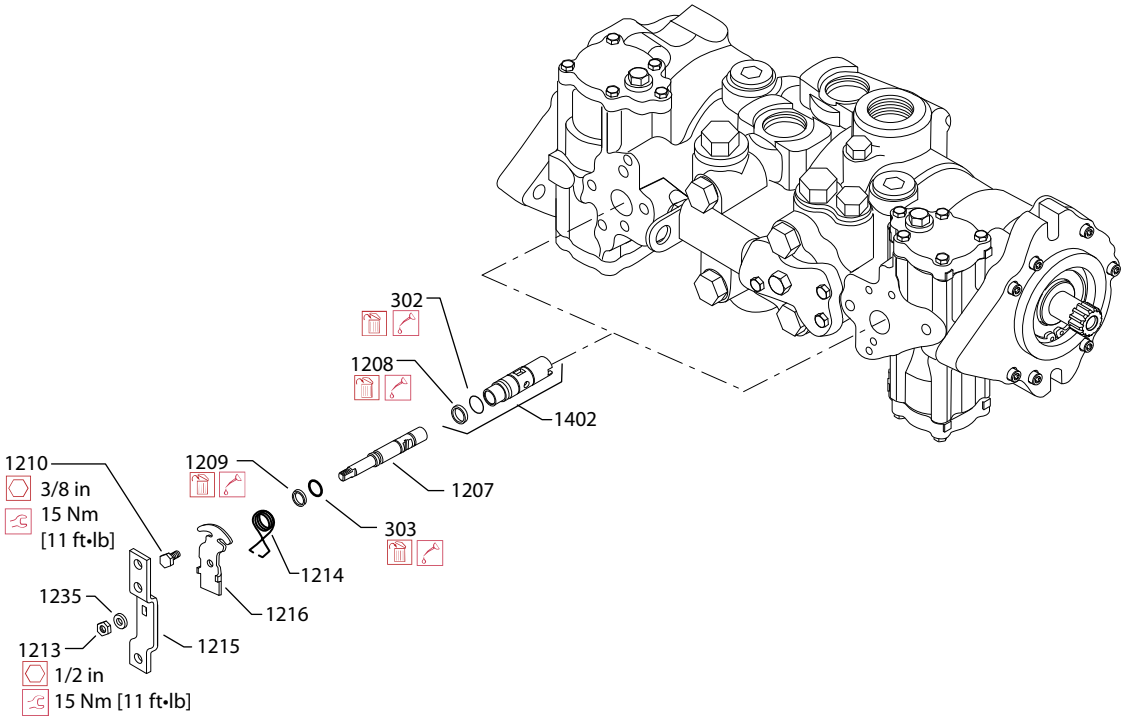

Electronic Displacement Control/Hydraulic Displacement Control

Removal

If control is suspected of failure, replace control and test pump for proper operation. When installing control, ensure that sleeve groove engages spring pin on swashplate

Minor repair

1. Using a 3/16 internal hex wrench, remove screws (1203 and 1204) or (1226 and 1224).
2. Remove control housing (1201) or control housing (1223) and manifold (1225). Remove and discard O-rings (1220 and 304) or (1227, 1228, and 1229).

Inspection

Inspect control spool for scratches, grooves, and other damage. If spool is damaged, or control is otherwise suspected of malfunction replace entire control unit. Inspect sleeve bore in housing for damage.

Reassembly

1. Lubricate and install O-rings (1220 and 304) onto control housing (1201) or lubricate and install O-rings (1227 and 1228) onto manifold (1225) and O-rings (1223A) onto control housing (1223). Lubricate and install control housing (1201) or manifold (1225) onto pump housing aligning sleeve groove with spring pin on swashplate.

Minor repair

2. Using a 3/16 internal hex wrench, install screws (1203 and 1204) or (1226). Torque to 14 Nm [10 ft•lb]. If necessary, install control housing (1223). Using a 4 mm internal hex wrench, install screws (1224). Torque to 14 Nm [10 ft•lb].

EDC-HDC Repair

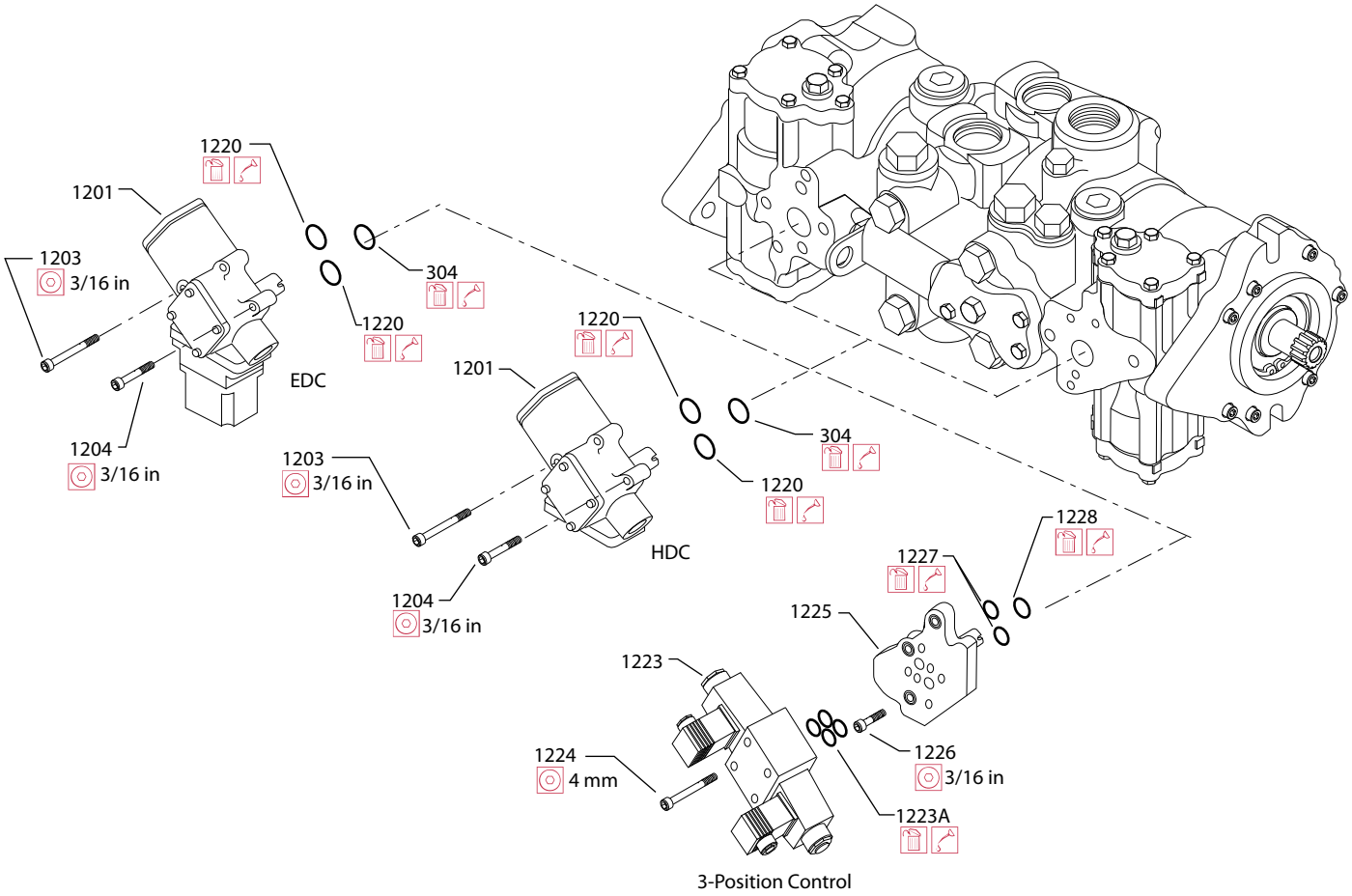

MDC orifice repair

Removal

Using a 3/16 internal hex wrench, remove pipe plug (1219). Using a 1/8 internal hex wrench, remove filter or orifice plug (1401).

Inspection

Inspect orifice for damage, contamination, and correct size. Replace orifice if necessary.

Reassembly

1. Using a 1/8 internal hex wrench, install filter or orifice plug (1401). Torque to 3 Nm [2 lb•ft].
2. Using a 3/16 internal hex wrench, install pipe plug (1219). Torque to 22 Nm [16 lb•ft].

Pipe plug (1219) needs to be installed with thread lock. Apply a few drops of thread lock before installation.

Minor repair

MDC orifice repair

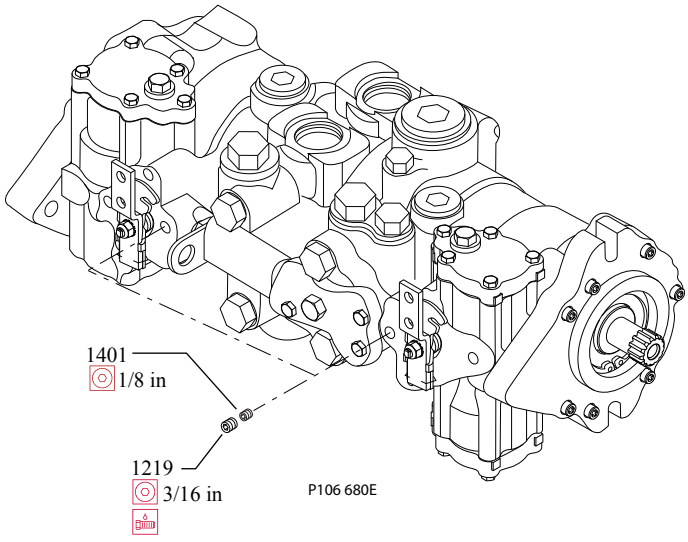

EDC/HDC orifice repair

Removal

1. Remove servo covers. See *Displacement limiter* on page 27, for servo cover removal and installation instructions.
2. Using a 7/32 internal hex wrench, remove orifice plugs (1403 and 1404).

Inspection

Inspect orifice for damage, contamination, and correct size. Replace orifice if necessary.

Reassembly

1. Using a 7/32 internal hex wrench, install orifice plugs (1403 and 1404). Torque to 3 Nm [2 ft•lb].

Minor repair

2. Install servo covers.

EDC/HDC orifice repair

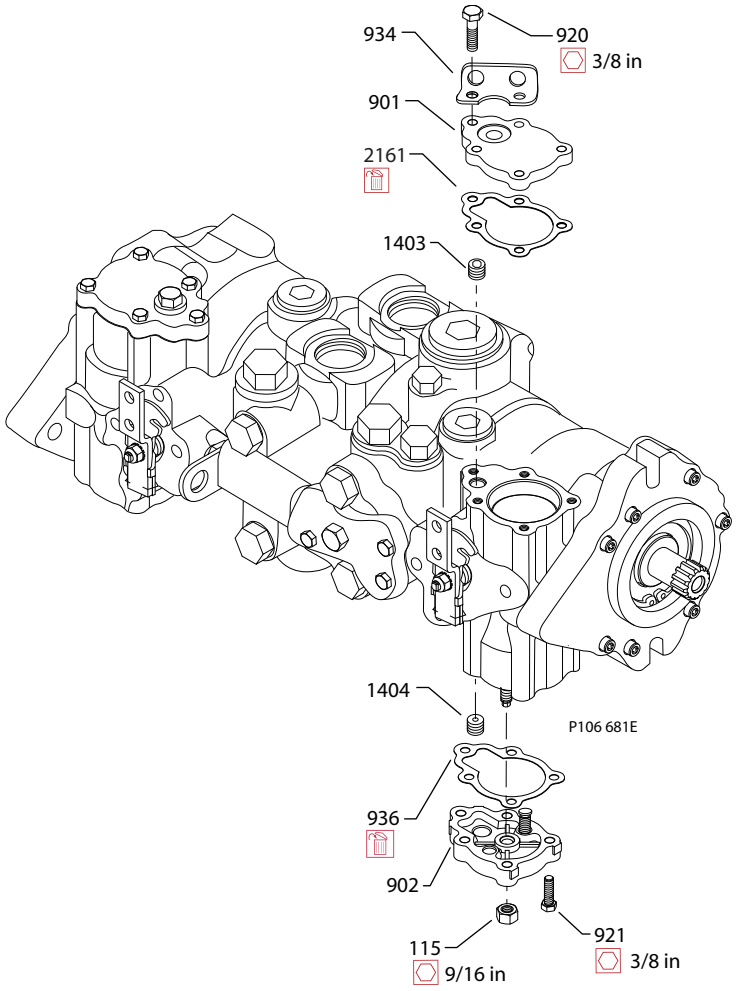

Torque chart

Fastener size and torque chart

Item	Fastener	Wrench size	Torque
920	Servo piston cover screws	3/8 hex	15 N•m [11 ft•lb]
921	Servo piston cover screws	3/8 hex	15 N•m [11 ft•lb]
4115	Front and rear cover screw	T50 Torx	58 N•m [43 ft•lb]
4135	Front and rear cover screws	T55 Torx	91 N•m [67 ft•lb]
2504	Aux cover screws	3/4 hex	43 N•m [32 ft•lb]
806	Filtration cover screw	1/2 hex	30 N•m [22 ft•lb]
927	Displacement limiter lock nut	9/16 hex	19 N•m [14 ft•lb]
1213	Control handle nut	1/2 hex	15 N•m [11 ft•lb]
1210	Screw	3/8	14 N•m [10 ft•lb]
2147	Screw	1/2 12 point	102 N•m [75 ft•lb]
2144	Nut	3/4 hex	102 N•m [75 ft•lb]
2115	Servo lock nut	9/16 hex	37 N•m [27 ft•lb]

Plug size and torque chart

Item	O-ring plug	Wrench size	Torque
102	3/4 16 UNF	1 inch hex	108 Nm [80 ft•lb]
2107	1-1/16 12 UNF	9/16 internal hex	115 Nm [85 ft•lb
2148	9/16 18 UNF	11/16 hex	37 Nm [27 ft•lb]
2110	9/16 18 UNF	11/16 hex	37 Nm [27 ft•lb]
2111	9/16 18 UNF	11/16 hex	37 Nm [27 ft•lb]
2155	7/16 20 UNF	9/16 hex	20 Nm [15 ft•lb]
810	9/16 18 UNF	11/16 hex	37 Nm [27 ft•lb]
1001	5/8 18 UNF	5/8 hex	20 Nm [15 ft•lb]
166	1-5/16 12 UNF	1-1/4 hex	176 Nm [130 ft•lb]

Torque chart

Hardware locations

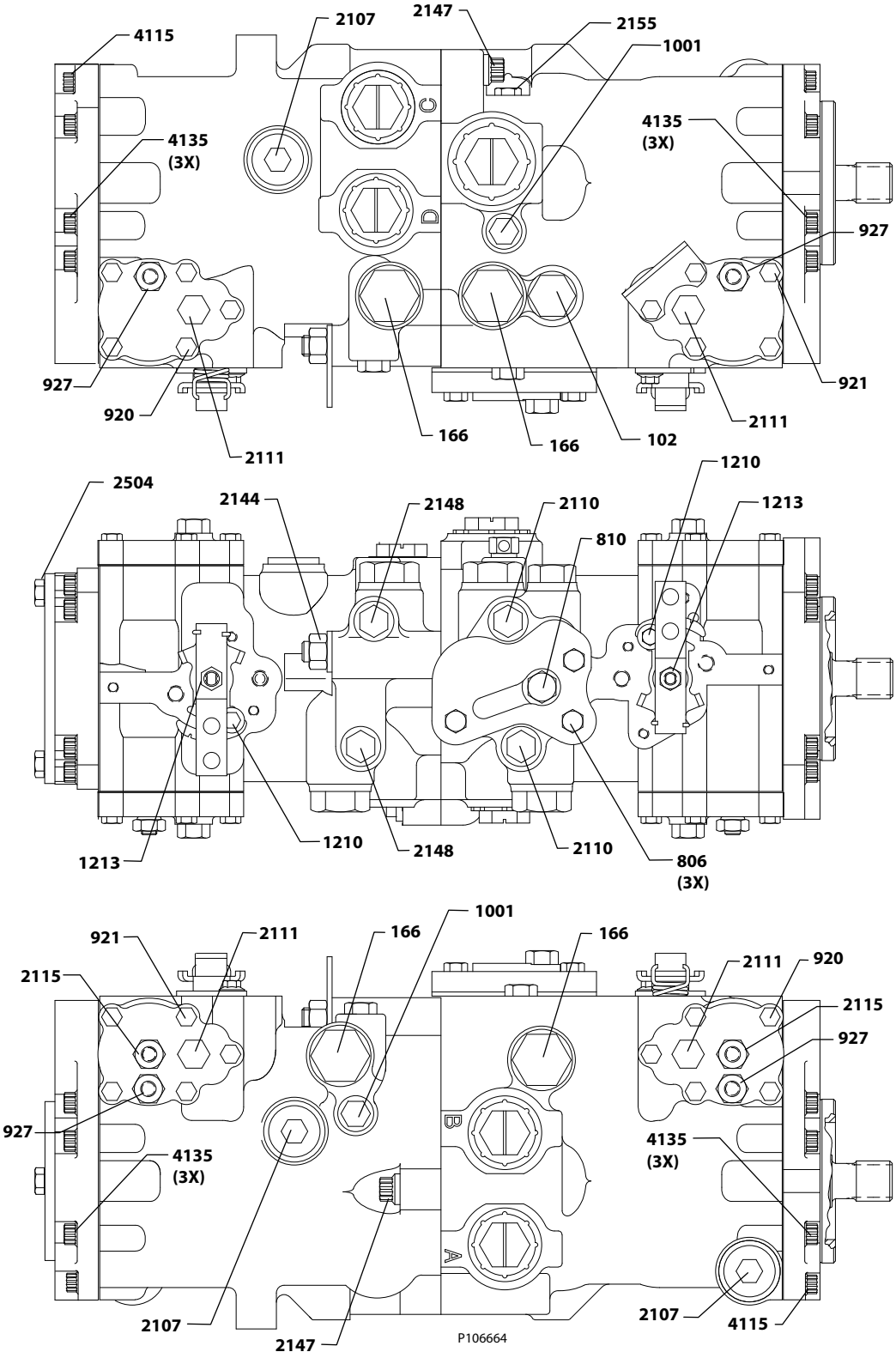

ENGINEERING
TOMORROW

Products we offer:

- Bent Axis Motors
- Closed Circuit Axial Piston Pumps and Motors
- Displays
- Electrohydraulic Power Steering
- Electrohydraulics
- Hydraulic Power Steering
- Integrated Systems
- Joysticks and Control Handles
- Microcontrollers and Software
- Open Circuit Axial Piston Pumps
- Orbital Motors
- PLUS+1® GUIDE
- Proportional Valves
- Sensors
- Steering
- Transit Mixer Drives

Danfoss Power Solutions is a global manufacturer and supplier of high-quality hydraulic and electronic components. We specialize in providing state-of-the-art technology and solutions that excel in the harsh operating conditions of the mobile off-highway market. Building on our extensive applications expertise, we work closely with our customers to ensure exceptional performance for a broad range of off-highway vehicles.

We help OEMs around the world speed up system development, reduce costs and bring vehicles to market faster.

Danfoss – Your Strongest Partner in Mobile Hydraulics.

Go to www.powersolutions.danfoss.com for further product information.

Wherever off-highway vehicles are at work, so is Danfoss. We offer expert worldwide support for our customers, ensuring the best possible solutions for outstanding performance. And with an extensive network of Global Service Partners, we also provide comprehensive global service for all of our components.

Please contact the Danfoss Power Solution representative nearest you.

Comatrol
www.comatrol.com

Turolla
www.turollaocg.com

Hydro-Gear
www.hydro-gear.com

Daikin-Sauer-Danfoss
www.daikin-sauer-danfoss.com

Local address:

Danfoss
Power Solutions (US) Company
2800 East 13th Street
Ames, IA 50010, USA
Phone: +1 515 239 6000

Danfoss
Power Solutions GmbH & Co. OHG
Krokamp 35
D-24539 Neumünster, Germany
Phone: +49 4321 871 0

Danfoss
Power Solutions ApS
Nordborgvej 81
DK-6430 Nordborg, Denmark
Phone: +45 7488 2222

Danfoss
Power Solutions Trading (Shanghai) Co., Ltd.
Building #22, No. 1000 Jin Hai Rd
Jin Qiao, Pudong New District
Shanghai, China 201206
Phone: +86 21 3418 5200