ENGINEERING
TOMORROW

Mobile solutions for **marine applications**

Propulsion, Cranes, and Winches

Improved
efficiency and increased hydraulic lifetime

powersolutions.danfoss.com

Rule the waves

Marine applications face the toughest operating environment imaginable. Subject to harsh weather conditions, extreme temperatures, and constant salt water immersion, your customers demand an extremely high level of reliability and exceptional performance.

Danfoss has the high-quality products and systems expertise to match your customers' demands. Our broad portfolio includes sophisticated load-sensing proportional valves and HIC/cartridge valves for enhanced design flexibility, powerful H1 axial piston pumps and bent axis motors for improved reliability and efficiency, and easy system integration and control with PLUS+1® microcontrollers and software. With Danfoss marine solutions, you can rule the waves.

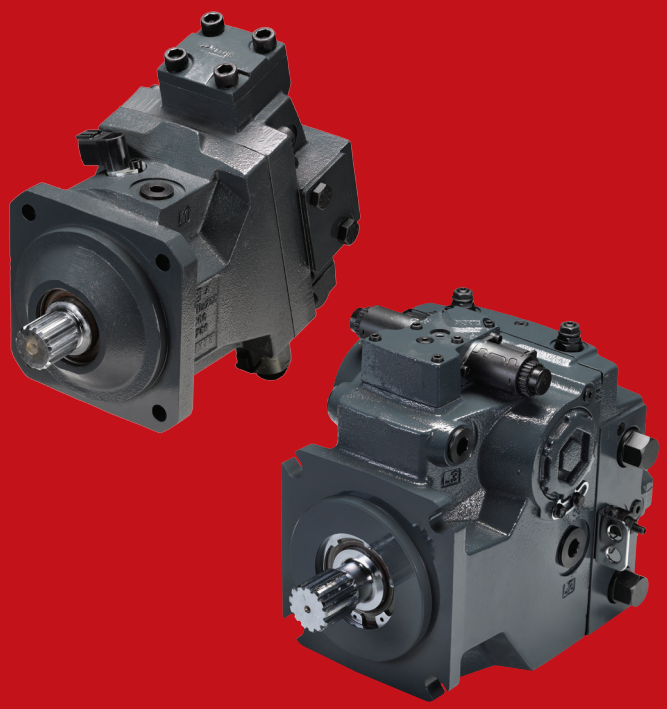

Total **system** competence

Crane

- Solutions for cranes of all types and sizes
- Precise flow control with load independent PVG valves
- Improved efficiency and lower energy consumption with D1 axial piston pumps
- State-of-the-art PLUS+1® technology for multiple crane management
- Radio remote control solutions for enhanced visibility
- Flexible and compact installation options

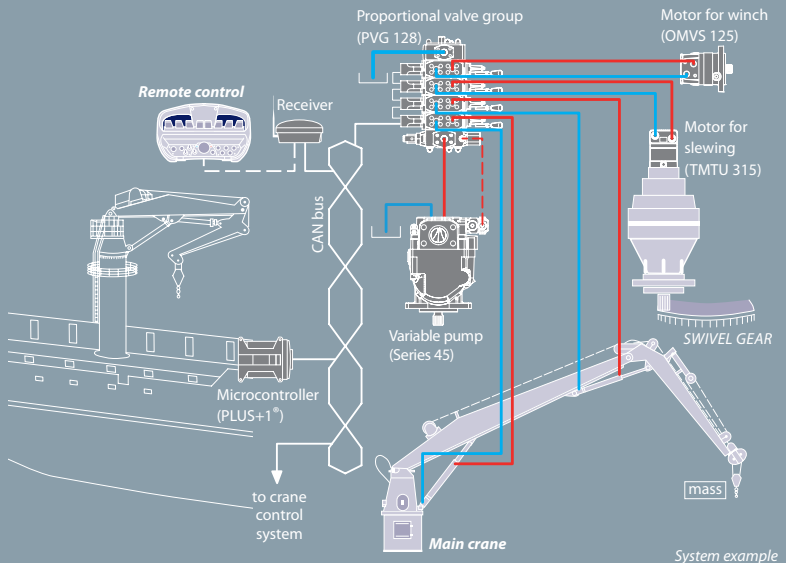

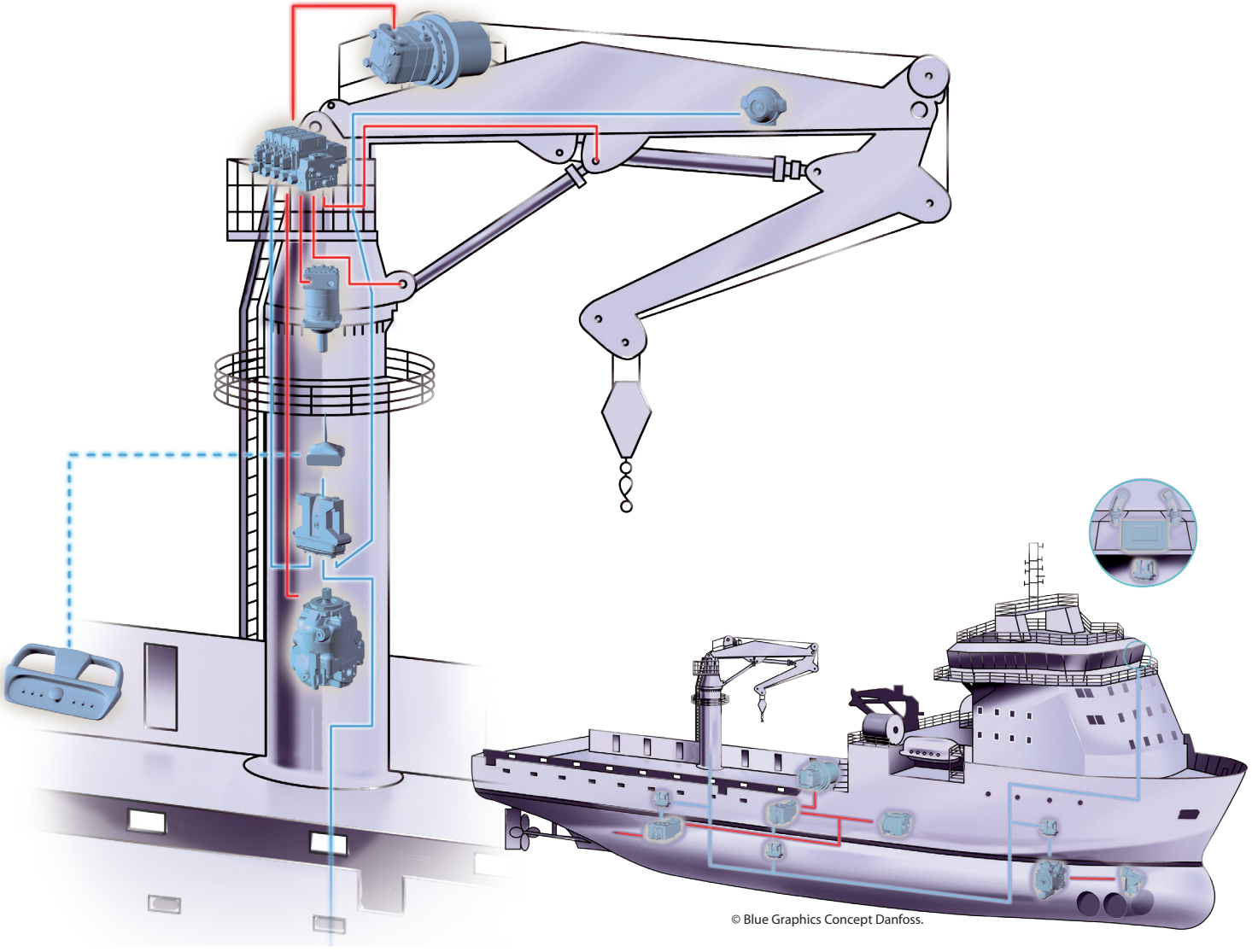

© Blue Graphics Concept Danfoss.

Winch

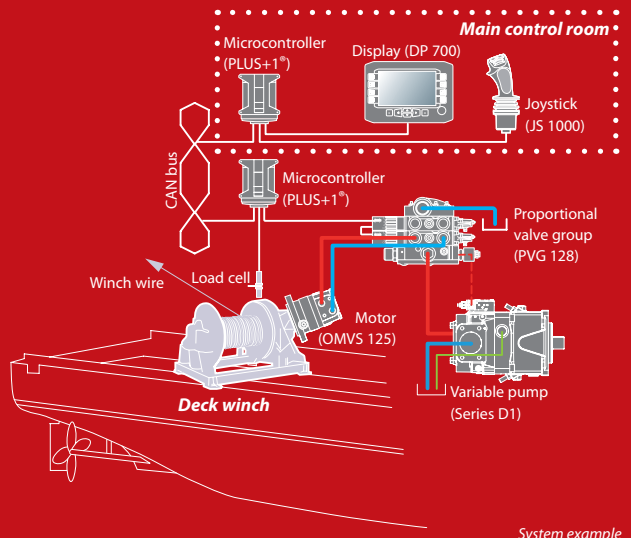

System example

- Improved safety and control with PLUS+1® microcontroller and CAN bus communication
- Range of supply options based on fixed or variable displacement pumps
- Compact and robust orbital motors for reliable winch operation
- Modular valve design allowing for customized systems

Thruster

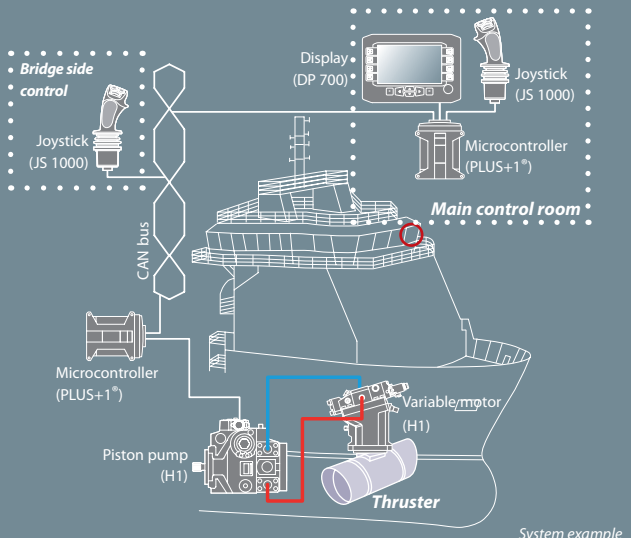

System example

- Advanced control solutions securing user-friendly integration of different system functions
- Improved reliability and efficiency with H1 piston pumps and bent axis motors
- CAN bus technology enabling flexible joystick positioning for bridge side control

Propulsion/pitch

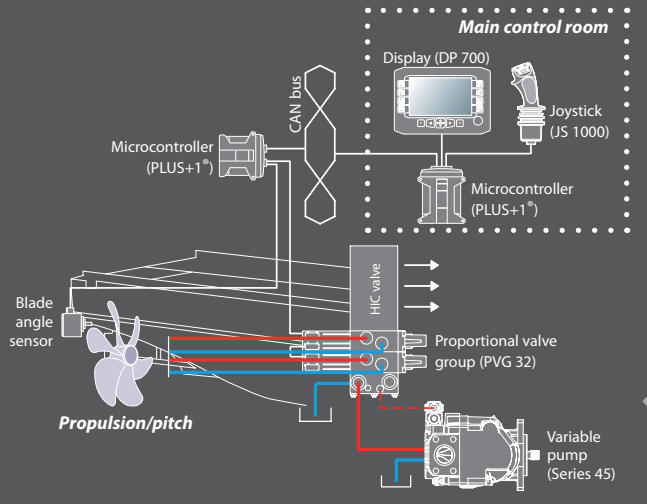

System example

- State-of-the-art microcontrollers for quick and accurate system management
- Modular valve design allowing customized systems
- CAN bus technology to ensure accurate pitch control
- Reduced energy consumption with Series 45 variable piston pumps
- Wide range of cartridge valves and HIC solutions

Controls

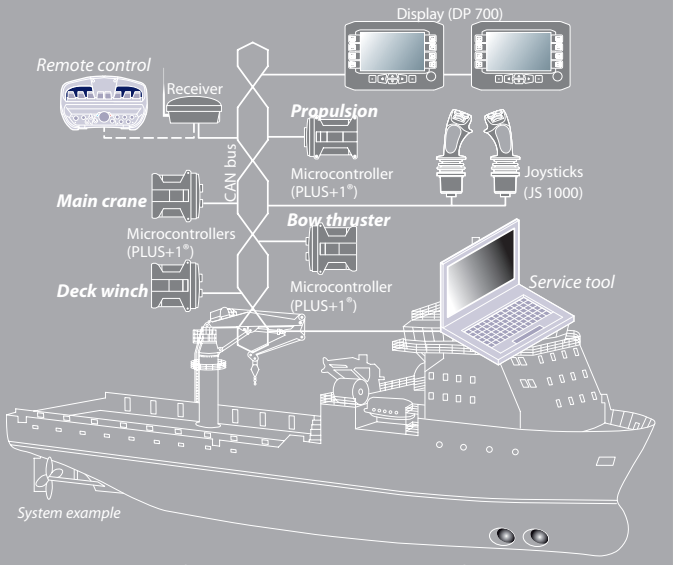

System example

- Wide range of PLUS+1® microcontrollers and software
- Customized control options with PLUS+1® GUIDE
- Full line of electronic displays with user-friendly operator interface
- CAN bus technology for perfect sub-system interaction
- Easy-to-use graphical programming features and system diagnostic
- Broad range of robust, high-quality sensors

Guidance and expert **knowledge**

Using fast, effective calculation tools, we are able to test machine performance and energy usage in any possible way, thereby saving time and costs for our customers.

Inquiry

Project specification

- **Detailed project plan**
- **Technical system specifications**

Concept phase

- **Different system proposals**
- **Evaluation and selection of approach**

Open to new ideas and new ways of doing things, Danfoss system engineers design tomorrow's solutions.

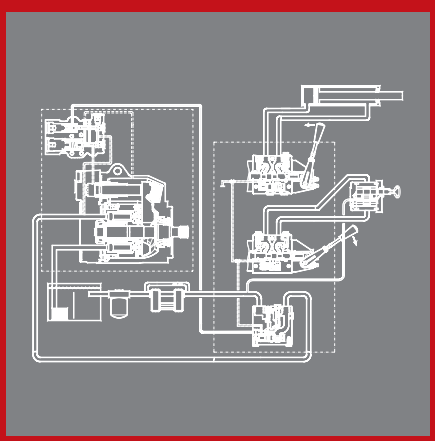

Danfoss takes a systematic approach to machine design and is able to fully document every system solution project.

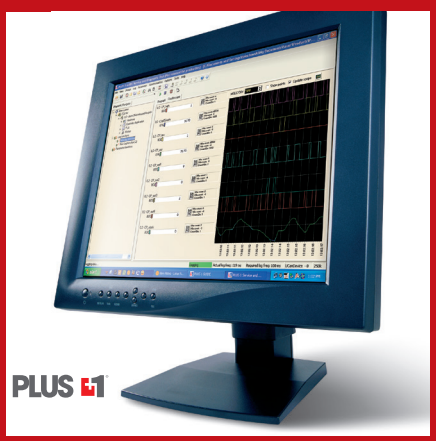

PLUS+1® is a development system that enables you to customize machine control with the performance, operating, and service functions you need.

Frontier mentality

Danfoss takes a comprehensive, systematic approach to machine development. Able to redesign the complete electrical and hydraulic system architecture on existing machinery, we find smarter solutions for tomorrow's advanced marine applications.

Our expert engineers have access to state-of-the-art technology and test facilities and they share an important quality: Frontier mentality. Open to new ideas, they will assist you through all the stages of a given system development project.

Project initiation

During the initiation phase we not only listen carefully to your goals, we also challenge existing views and come up with alternative ideas. We need to make sure that the end-result – your marine solution – will be technologically reliable and economically feasible; for you and the end-user. That is our job and it starts long before any talk about final project specifications. The initiation phase is important. Choose Danfoss, if you want an active partner on board from the beginning.

Customized machine control made easy

If you are looking for a tool that will allow you to rapidly develop a customized crane control system, you have come to the right place. PLUS+1® – the new Danfoss operating system network – combines machine controls and electronic diagnostics in an integrated operating network that connects the interactive control of pumps, motors, joysticks, inverters, and sensors. The system enables you to select from an array of microcontrollers, I/O modules, displays, joysticks, and software to easily and quickly customize machine operation. PLUS+1 is system customization made easy.

Selecting, testing, documenting

A new marine system is not released when we believe it will perform the way it is supposed to. It is released when we know it will. We select components that we know are compatible, then we carry out a system FMEA. We install the components in a prototype, then we carry out a system performance analysis and real-life work condition tests at our on-site test-facility – or yours. We make a final review, then we hand over the documentation. That is the way we do it – selecting, testing, documenting.

The world-wide Danfoss service organization

"Out of sight, out of mind", goes a popular saying. That is not the Danfoss way. True, we are serious about guiding, developing, testing, and delivering, but we are serious about after-sales service too. With sales companies and distributors worldwide, you find local engineering expertise on all continents, and we are able to provide you with the after sales service you need, where you need it.

Design phase

- **Sizing and selection of compatible components**
- **Advanced simulation tests and system FMEA**

Implementation

- **Installation in prototype**
- **Real-life work condition tests at Danfoss' on-site test-facility**
- **Careful system performance analysis for optimization and trouble-shooting**

Release phase

- **Final review**
- **Final report**
- **Documentation**
- **Start-up help**

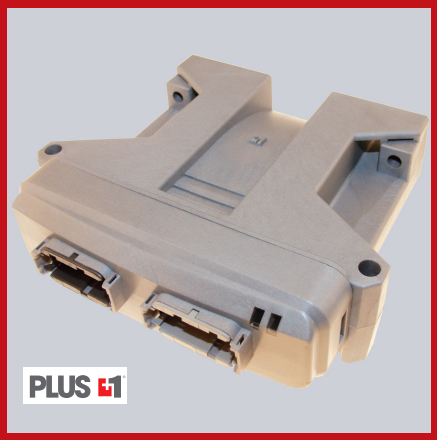

PLUS+1® microcontrollers and I/O expansion modules are designed to provide flexible, expandable, and powerful machine management systems.

We can test hydraulic systems performance in any possible situation.

Drawing on the strength of a global organization, Danfoss provides you with resources, support, and service on a local basis.

ENGINEERING
TOMORROW

About
Danfoss Power Solutions

Danfoss Power Solutions is a global manufacturer and supplier of high-quality hydraulic and electronic components. We specialize in providing state-of-the-art technology and solutions that excel in the harsh operating conditions of the mobile off-highway market. Building on our extensive applications expertise, we work closely with you to ensure exceptional performance for a broad range of off-highway vehicles. We help OEMs around the world speed up system development, reduce costs and bring vehicles to market faster.

Danfoss Power Solutions – your strongest partner in mobile hydraulics.

Products we offer:

- Bent Axis Motors
- Closed Circuit Axial Piston Pumps and Motors
- Displays
- Electrohydraulic Power Steering
- Electrohydraulics
- Hydraulic Power Steering
- Integrated Systems
- Joysticks and Control Handles
- Microcontrollers and Software
- Open Circuit Axial Piston Pumps
- Orbital Motors
- PLUS+1® GUIDE
- Proportional Valves
- Sensors
- Steering
- Transit Mixer Drives

Wherever off-highway vehicles are at work, so is Danfoss Power Solutions. We offer you expert worldwide support for ensuring the best possible solutions for outstanding performance. And with an extensive network of Global Service Partners, we also provide you with comprehensive global service for all of our components.

Go to www.powersolutions.danfoss.com for further product information.

Danfoss Power Solutions (US) Company
2800 East 13th Street
Ames, IA 50010, USA
Phone: +1 515 239 6000

Danfoss Power Solutions ApS
Nordborgvej 81
DK-6430 Nordborg, Denmark
Phone: +45 7488 2222

Danfoss Power Solutions GmbH & Co. OHG
Krokamp 35
D-24539 Neumünster, Germany
Phone: +49 4321 871 0

Danfoss Power Solutions Trading (Shanghai) Co. Ltd.
Building #22, No. 1000 Jin Hai Rd
Jin Qiao, Pudong New District
Shanghai, China 201206
Phone: +86 21 3418 5200

Danfoss can accept no responsibility for possible errors in catalogues, brochures and other printed material. Danfoss reserves the right to alter its products without notice. This also applies to products already on order provided that such alterations can be made without changes being necessary in specifications already agreed.
All trademarks in this material are property of the respective companies. Danfoss and the Danfoss logotype are trademarks of Danfoss A/S. All rights reserved.

AD00000001en-US | 11035658 | Rev 0101 **|** June 2016

Front cover photo: www.valderhaug.no