ENGINEERING
TOMORROW

Application guidelines

Inverter scroll compressors
VSH088-117-170

50 - 60 Hz - R410A

http://cc.danfoss.com

VSH scroll specificities **6**

Inverter compressors **7**
Compressor size 7
Frequency converter variants 7
Compressor and frequency converter combinations 7

Nomenclature and specifications **8**
Compressor nomenclature 8
Frequency converter nomenclature 8

Technical specifications **9**
Compressor specifications 9
Frequency converter specifications 9
Oil injection control 9
Bearings lubrication 9
Capacity at EN12900 rating conditions 10
Capacity at ARI rating conditions 11

Dimensions **12**
VSH088-G & H 12
VSH088-J 13
VSH117-G & H 14
VSH117-J 15
VSH170- G - H & J 16
Sight glass 17
Schrader 17
Oil equalisation connection 17
Oil drain fitting 17
Suction & discharge connections 17
Frequency converter dimensions 17
CDS302 frequency converter - enclosure B1 18
CDS302 frequency converter - enclosure B2 19
CDS302 frequency converter - enclosure B3 20
CDS302 frequency converter - enclosure B4 21
CDS302 frequency converter - enclosure C1 22
CDS302 frequency converter - enclosure C3 23

Electrical data, connections and wiring **24**
Supply voltage 24
Compressor electrical specifications 24
Fuses 24
Wire sizes 25
Wiring & EMC protection 25
Hipot test procedure 25
EMC correct installation of an IP20 frequency drive CDS302 26
Wiring diagram 27
Wiring connections 28
Electrical connections 28
Soft-start control 29
Phase sequency and reverse rotation protection 29
IP rating 29
Motor protection 29
Voltage imbalance 29
Frequency converter efficiency 29
Ambient temperature and altitude 29

Approvals and certificates **30**
Approvals and certificates 30
Pressure equipment directive 2014/68/EU 30
Low voltage directive 2014/35/EU 30
Internal free volume 30

Operating conditions 31
Application envelope 31
Short cycle timer function 31
Discharge gas temperature protection function 31
Discharge gas thermostat 32
Oil return management function 32
High and low pressure protection 33

System design recommendations 34
Essential piping design considerations 34
Heat exchangers 37
Refrigerant charge limits 37
Off-cycle migration 37
Liquid floodback during operation 38

Specific application recommendations 39
Low ambient compressor operations 39
Brazed plate heat exchangers 40
Reversible heat pump systems 40
Discharge line and reversing valve 41

Sound and vibration management 42
Running sound level 42
Sound generation in a refrigeration or air conditioning system 42
Compressor sound radiation 42
Mechanical vibrations 42
Speed by-pass 42
Gas pulsation 42

Installation 43
Compressor handling 43
Mounting 43
Removing connections shipping plugs 43
System cleanliness 44
Tubing 44
Filter driers 44
Brazing and soldering 44
Compressor connection 44
System pressure test 45
Leak detection 45
Vacuum pump down and moisture removal 46
Refrigerant charging 46
Commissioning 47
Oil level checking and top-up 47

Ordering information and packaging 48
Kit ordering and shipping 48
Packaging 48
VSH voltage code J - 200-240 Volt 48
VSH voltage code G - 380-480 Volt 49
VSH voltage code H - 525-600 Volt 49

Accessories 50
Valves, adapters, connectors & gaskets for use on suction and discharge connections 50
Crankcase heaters & thermostats 51
Lubricant , acoustic hoods and spareparts 52
Spare parts frequency converter 53

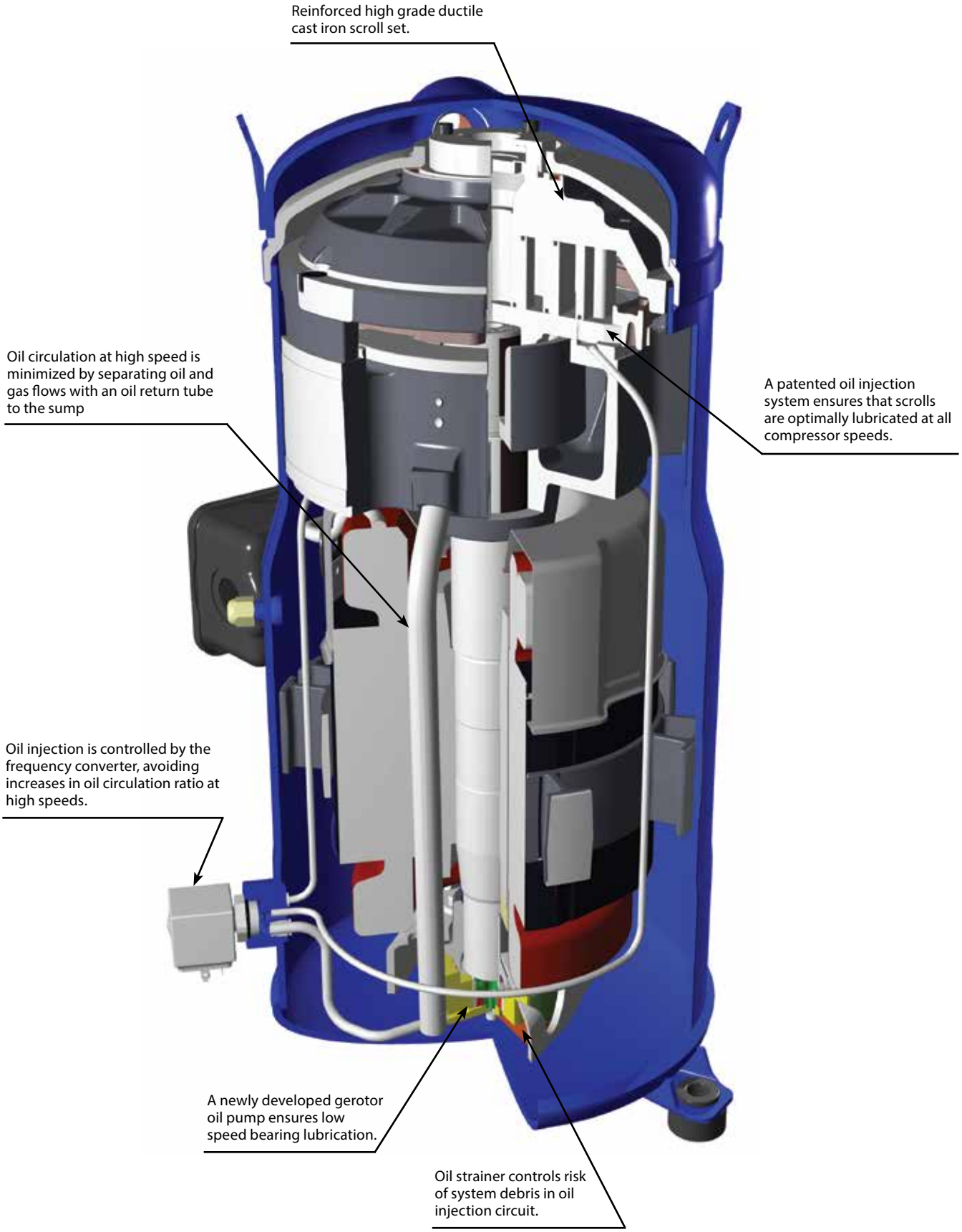
Reinforced high grade ductile cast iron scroll set.
Oil circulation at high speed is minimized by separating oil and gas flows with an oil return tube to the sump
A patented oil injection system ensures that scrolls are optimally lubricated at all compressor speeds.
Oil injection is controlled by the frequency converter, avoiding increases in oil circulation ratio at high speeds.
A newly developed gerotor oil pump ensures low speed bearing lubrication.
Oil strainer controls risk of system debris in oil injection circuit.

Compressor size

Inverter technology offers more flexibility in compressor selection than fixed speed compressors. Selection of the right inverter compressor size can be done by different methods:

1. Maximum cooling capacity: Select a compressor size which achieves the peak load system cooling capacity demand at its maximum speed.

2. Nominal cooling capacity: Select a compressor size which achieves the nominal system cooling capacity at a rotational speed of 3600 - 4500 rpm (60-75 Hz).

3. Best Seasonal Efficiency Ratio: Select a compressor size which achieves the minimum system cooling demand at its minimum speed. Ensure that the compressor is able to cover the peak load system cooling capacity. This selection makes the compressor to run for a maximum of time at part load where the system efficiency is highest.

Performance tables at 3 speeds can be found in following pages. Detailed performances can be found in datasheets and in selection program.

Frequency converter variants

Different frequency converter variants are available according to:

1. Main supply voltage
2. IP class (CDS302 drives are available in IP20 or IP55 housings)
3. RFI class (Radio Frequency Interference) H2 or H3
4. Local Control Panel (LCP) provided or not
5. Printed Circuit Board (PCB) coated or not coated.

Compressor and frequency converter combinations

When the compressor size and mains voltage have been defined with above selection criteria, the code number tables from section "Ordering information and packaging" give the appropriate frequency converter sizes and up to 16 corresponding code numbers for each compressor model.

Compressor nomenclature

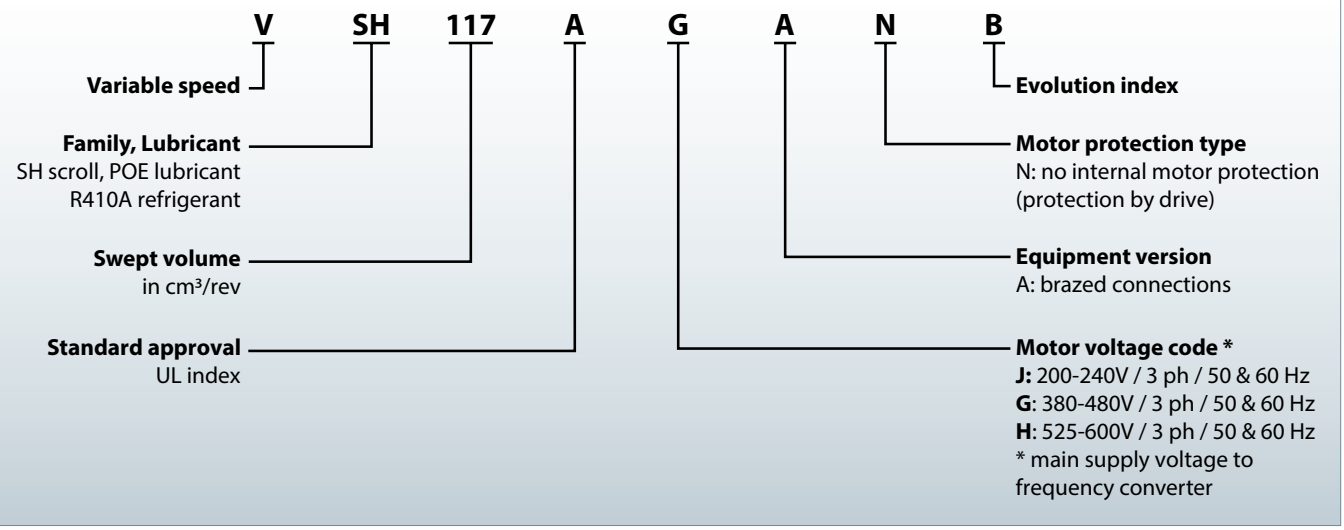

Frequency converter nomenclature

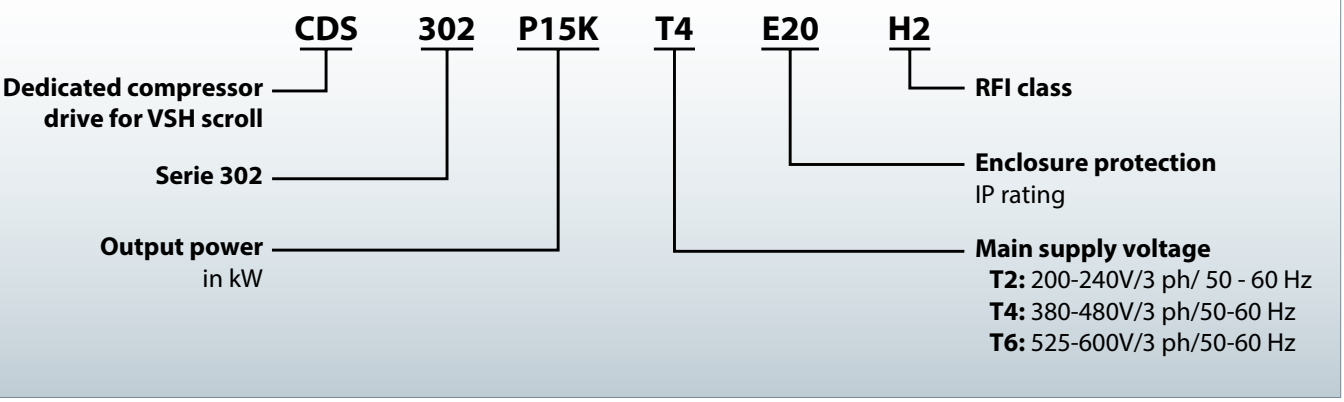

Compressor specifications

Compressor model	Swept volume (cm^3/rev)	Displacement				Oil charge (dm^3)	Net weight (kg)
		Min speed (m^3/h)	3000 rpm (m^3/h)	3600 rpm (m^3/h)	Max speed (m^3/h)		
VSH088	88.4	9.3	15.4	18.6	27.8	3.3	58
VSH117	116.9	12.3	20.3	24.6	36.6	3.6	64
VSH170	170.2	17.8	29.6	35.7	53.3	6.7	105

Frequency converter specifications

Mains supply voltage	T2: 200 - 240 V +/-10% (3-phase)
	T4: 380 - 480 V +/-10% (3-phase)
	T6: 525 - 600 V +/-10% (3-phase)
Supply frequency	50 / 60 Hz
Output voltage	0 - 100 % of supply voltage
Inputs	6 digital (0 - 24 V), 2 analogue (-10 / +10 V or 0 / 4 V -20 mA, scalable)
Programmable outputs	2 digital (0- 24 V), 1 analogue (0-24 V), 1 relay
Protection functions	Over-current protection, over-modulation handling, low / high current handling
Compressor functions	Discharge gas temperature protection, pressostat / thermostat function, short cycle protection, oil return management

Oil injection control

VSH compressors are equipped with an oil injection system that ensures the scroll set lubrication and controls the oil circulation ratio, at all running speeds. The frequency converter via an oil injection valve controls this system. The oil injection valve is a normally closed valve. At low speed, the valve is closed and the oil is injected below the orbiting scroll.

VSH compressors are delivered with both 230V coils and 24V coils.

Control parameters are factory preset but accessible on the parameter list as read only values.

Bearings lubrication

Optimal bearings lubrication is ensured by a gerotor oil pump at all compressor speeds.

Capacity at EN12900 rating conditions

		To	-25		-20		-15		-10		-5		0		5		10		15	
		Tc	Qo	Pe	Qo	Pe	Qo	Pe	Qo	Pe	Qo	Pe	Qo	Pe	Qo	Pe	Qo	Pe	Qo	Pe
VSH088	1800 rpm	20	-	-	6 200	2.25	7 600	2.25	9 300	2.24	11 300	2.20	13 500	2.14	16 200	2.06	-	-	-	-
		30	-	-	5 500	2.81	6 900	2.82	8 500	2.83	10 400	2.82	12 500	2.80	15 000	2.75	17 800	2.68	21 000	2.58
		40	-	-	4 700	3.51	6 000	3.52	7 400	3.52	9 100	3.52	11 100	3.51	13 300	3.49	15 900	3.45	18 800	3.39
		50	-	-	-	-	-	-	6 100	4.47	7 600	4.46	9 300	4.45	11 300	4.43	13 500	4.41	16 100	4.37
		60	-	-	-	-	-	-	-	-	-	-	7 200	5.75	8 800	5.73	10 700	5.70	12 900	5.66
		68	-	-	-	-	-	-	-	-	-	-	-	-	-	-	-	-	-	-
	3600 rpm	20	10 800	4.31	13 300	4.38	16 300	4.44	19 800	4.50	23 800	4.53	28 600	4.54	34 000	4.51	-	-	-	-
		30	9 400	5.34	11 800	5.39	14 600	5.45	17 900	5.52	21 700	5.59	26 000	5.65	31 000	5.68	36 700	5.68	43 100	5.65
		40	-	-	10 300	6.58	12 900	6.63	15 900	6.70	19 400	6.78	23 300	6.86	27 800	6.94	33 000	7.00	38 800	7.04
		50	-	-	-	-	-	-	13 700	8.18	16 700	8.26	20 200	8.35	24 200	8.45	28 700	8.55	33 900	8.65
		60	-	-	-	-	-	-	-	-	-	-	16 600	10.27	20 000	10.37	23 900	10.50	28 300	10.63
		68	-	-	-	-	-	-	-	-	-	-	-	-	16 100	12.32	19 400	12.45	23 200	12.60
	5400 rpm	20	16 300	5.76	19 900	5.95	24 300	6.10	29 400	6.21	35 500	6.29	42 500	6.34	50 500	6.37	-	-	-	-
		30	14 300	8.00	17 800	8.23	22 000	8.42	26 800	8.58	32 500	8.71	39 100	8.82	46 600	8.91	55 200	8.98	64 900	9.05
		40	-	-	15 700	10.00	19 500	10.24	24 000	10.45	29 100	10.63	35 100	10.80	42 000	10.95	49 800	11.09	58 700	11.22
		50	-	-	-	-	-	-	20 700	12.36	25 300	12.60	30 500	12.82	36 600	13.04	43 600	13.25	51 500	13.45
		60	-	-	-	-	-	-	-	-	-	-	25 100	15.45	30 300	15.73	36 200	16.01	43 100	16.28
		68	-	-	-	-	-	-	-	-	-	-	-	-	24 400	18.69	29 500	19.02	35 400	19.36
VSH117	1800 rpm	20	-	-	7 000	2.82	8 900	2.86	11 200	2.86	13 900	2.86	17 100	2.85	20 700	2.85	-	-	-	-
		30	-	-	6 500	3.62	8 400	3.66	10 600	3.67	13 200	3.68	16 100	3.68	19 500	3.69	23 300	3.71	27 700	3.77
		40	-	-	5 800	4.56	7 500	4.59	9 600	4.61	11 900	4.61	14 600	4.61	17 600	4.62	21 000	4.65	24 900	4.71
		50	-	-	-	-	-	-	8 100	5.80	10 100	5.80	12 400	5.79	15 000	5.79	18 000	5.82	21 300	5.87
		60	-	-	-	-	-	-	-	-	-	-	9 800	7.36	11 900	7.35	14 300	7.36	17 100	7.40
		68	-	-	-	-	-	-	-	-	-	-	-	-	-	-	-	-	-	-
	3600 rpm	20	15 100	5.81	18 600	5.92	22 700	6.04	27 500	6.17	33 200	6.31	39 700	6.44	47 100	6.58	-	-	-	-
		30	12 700	7.05	15 900	7.13	19 700	7.24	24 100	7.39	29 300	7.55	35 200	7.73	42 000	7.93	49 800	8.12	58 500	8.32
		40	-	-	13 600	8.65	17 100	8.72	21 100	8.84	25 700	8.99	31 000	9.18	37 100	9.39	44 000	9.62	51 900	9.87
		50	-	-	-	-	-	-	18 000	10.75	22 100	10.85	26 700	11.00	32 100	11.19	38 200	11.42	45 200	11.68
		60	-	-	-	-	-	-	-	-	-	-	22 100	13.43	26 700	13.55	31 900	13.74	38 000	13.97
		68	-	-	-	-	-	-	-	-	-	-	-	-	21 900	16.01	26 400	16.12	31 600	16.30
	5400 rpm	20	21 700	8.51	26 600	8.84	32 500	9.23	39 500	9.64	47 700	10.05	57 200	10.42	68 100	10.71	-	-	-	-
		30	18 700	10.49	23 500	10.73	29 100	11.07	35 700	11.49	43 300	11.94	52 200	12.40	62 300	12.83	73 800	13.19	86 900	13.46
		40	-	-	20 600	12.90	25 700	13.12	31 700	13.46	38 700	13.89	46 700	14.36	55 900	14.86	66 400	15.33	78 300	15.75
		50	-	-	-	-	-	-	27 400	15.93	33 500	16.26	40 600	16.68	48 700	17.16	58 000	17.67	68 600	18.17
		60	-	-	-	-	-	-	-	-	-	-	33 600	19.71	40 500	20.11	48 400	20.58	57 600	21.09
		68	-	-	-	-	-	-	-	-	-	-	-	-	32 900	23.18	39 700	23.57	47 500	24.03
VSH170	1800 rpm	20	-	-	9 700	4.08	13 300	4.10	17 400	4.11	22 100	4.07	27 500	3.96	33 600	3.74	-	-	-	-
		30	-	-	7 900	5.30	11 100	5.31	14 800	5.34	19 100	5.37	23 800	5.36	29 100	5.29	34 900	5.12	41 300	4.84
		40	-	-	6 200	6.84	9 200	6.77	12 600	6.77	16 400	6.80	20 600	6.83	25 200	6.84	30 200	6.80	35 700	6.68
		50	-	-	-	-	-	-	10 100	8.70	13 500	8.67	17 300	8.68	21 300	8.71	25 700	8.73	30 400	8.71
		60	-	-	-	-	-	-	-	-	-	-	13 500	11.22	17 100	11.21	20 900	11.22	24 900	11.24
		68	-	-	-	-	-	-	-	-	-	-	-	-	-	-	-	-	-	-
	3600 rpm	20	20 600	8.23	25 500	8.35	31 300	8.47	38 100	8.56	46 100	8.60	55 500	8.58	66 200	8.46	-	-	-	-
		30	17 700	10.66	22 300	10.71	27 700	10.80	34 100	10.90	41 600	10.98	50 200	11.04	60 000	11.04	71 300	10.97	84 000	10.81
		40	-	-	19 300	13.26	24 300	13.27	30 100	13.32	36 800	13.39	44 600	13.48	53 500	13.54	63 700	13.57	75 200	13.55
		50	-	-	-	-	-	-	25 700	16.30	31 600	16.31	38 500	16.36	46 300	16.44	55 300	16.52	65 500	16.58
		60	-	-	-	-	-	-	-	-	-	-	31 500	20.17	38 200	20.21	45 800	20.28	54 600	20.37
		68	-	-	-	-	-	-	-	-	-	-	-	-	30 800	24.16	37 300	24.19	44 800	24.26
	5400 rpm	20	31 800	12.66	39 100	12.95	47 800	13.26	58 000	13.59	70 000	13.89	83 800	14.15	99 600	14.35	-	-	-	-
		30	27 500	16.01	34 500	16.21	42 700	16.48	52 300	16.79	63 400	17.11	76 100	17.43	90 700	17.72	107 200	17.96	125 800	18.12
		40	-	-	30 200	19.70	37 800	19.87	46 600	20.11	56 600	20.41	68 200	20.73	81 300	21.06	96 300	21.37	113 100	21.64
		50	-	-	-	-	-	-	40 300	24.13	49 300	24.34	59 500	24.61	71 100	24.93	84 300	25.26	99 200	25.60
		60	-	-	-	-	-	-	-	-	-	-	49 300	29.65	59 300	29.90	70 700	30.21	83 500	30.54
		68	-	-	-	-	-	-	-	-	-	-	-	-	48 400	35.05	58 100	35.30	69 300	35.60

To: Evaporating temperature in °C
Tc: Condensing temperature in °C
Qo: Cooling capacity in W

Superheat = 10 K
Subcooling = 0 K
Pe: Power input in kW

Presented data are for models with motor voltage code G

Capacity at ARI rating conditions

		To	-25		-20		-15		-10		-5		0		5		10		15	
		Tc	Qo	Pe	Qo	Pe	Qo	Pe	Qo	Pe	Qo	Pe	Qo	Pe	Qo	Pe	Qo	Pe	Qo	Pe
VSH088	1800 rpm	20	-	-	6 600	2.25	8 100	2.25	9 900	2.24	12 000	2.20	14 400	2.14	17 200	2.06	-	-	-	-
		30	-	-	6 000	2.81	7 400	2.82	9 100	2.83	11 100	2.82	13 500	2.80	16 100	2.75	19 100	2.68	22 500	2.58
		40	-	-	5 100	3.51	6 500	3.52	8 100	3.52	9 900	3.52	12 100	3.51	14 500	3.49	17 300	3.45	20 400	3.39
		50	-	-	-	-	-	-	6 800	4.47	8 400	4.46	10 300	4.45	12 500	4.43	15 000	4.41	17 800	4.37
		60	-	-	-	-	-	-	-	-	-	-	8 300	5.75	10 100	5.73	12 300	5.70	14 700	5.66
		68	-	-	-	-	-	-	-	-	-	-	-	-	-	-	-	-	-	-
	3600 rpm	20	11 600	4.31	14 200	4.38	17 400	4.44	21 100	4.50	25 400	4.53	30 400	4.54	36 100	4.51	-	-	-	-
		30	10 200	5.34	12 700	5.39	15 700	5.45	19 200	5.52	23 300	5.59	28 000	5.65	33 300	5.68	39 400	5.68	46 200	5.65
		40	-	-	11 300	6.58	14 100	6.63	17 400	6.70	21 100	6.78	25 400	6.86	30 300	6.94	35 800	7.00	42 100	7.04
		50	-	-	-	-	-	-	15 200	8.18	18 600	8.26	22 500	8.35	26 800	8.45	31 800	8.55	37 500	8.65
		60	-	-	-	-	-	-	-	-	-	-	19 100	10.27	23 000	10.37	27 400	10.50	32 400	10.63
		68	-	-	-	-	-	-	-	-	-	-	-	-	-	-	23 700	12.45	28 300	12.60
	5400 rpm	20	17 500	5.76	21 300	5.95	25 900	6.10	31 400	6.21	37 800	6.29	45 200	6.34	53 800	6.37	-	-	-	-
		30	15 400	8.00	19 200	8.23	23 700	8.42	28 900	8.58	35 000	8.71	42 000	8.82	50 000	8.91	59 200	8.98	69 600	9.05
		40	-	-	17 100	10.00	21 300	10.24	26 100	10.45	31 800	10.63	38 300	10.80	45 700	10.95	54 200	11.09	63 800	11.22
		50	-	-	-	-	-	-	23 000	12.36	28 100	12.60	33 900	12.82	40 600	13.04	48 300	13.25	57 000	13.45
		60	-	-	-	-	-	-	-	-	-	-	28 900	15.45	34 800	15.73	41 600	16.01	49 400	16.28
		68	-	-	-	-	-	-	-	-	-	-	-	-	-	-	36 100	19.02	43 200	19.36
VSH117	1800 rpm	20	-	-	7 500	2.82	9 500	2.86	12 000	2.86	14 900	2.86	18 200	2.85	22 100	2.85	-	-	-	-
		30	-	-	7 100	3.62	9 100	3.66	11 400	3.67	14 200	3.68	17 300	3.68	21 000	3.69	25 000	3.71	29 700	3.77
		40	-	-	6 300	4.56	8 200	4.59	10 400	4.61	13 000	4.61	15 800	4.61	19 100	4.62	22 800	4.65	27 000	4.71
		50	-	-	-	-	-	-	9 000	5.80	11 300	5.80	13 800	5.79	16 700	5.79	19 900	5.82	23 600	5.87
		60	-	-	-	-	-	-	-	-	-	-	11 300	7.36	13 700	7.35	16 400	7.36	19 500	7.40
		68	-	-	-	-	-	-	-	-	-	-	-	-	-	-	-	-	-	-
	3600 rpm	20	16 200	5.81	19 900	5.92	24 200	6.04	29 400	6.17	35 300	6.31	42 200	6.44	50 100	6.58	-	-	-	-
		30	13 700	7.05	17 200	7.13	21 200	7.24	26 000	7.39	31 500	7.55	37 800	7.73	45 100	7.93	53 400	8.12	62 700	8.32
		40	-	-	14 900	8.65	18 600	8.72	23 000	8.84	28 000	8.99	33 700	9.18	40 300	9.39	47 900	9.62	56 400	9.87
		50	-	-	-	-	-	-	20 100	10.75	24 500	10.85	29 700	11.00	35 600	11.19	42 300	11.42	50 000	11.68
		60	-	-	-	-	-	-	-	-	-	-	25 500	13.43	30 700	13.55	36 700	13.74	43 500	13.97
		68	-	-	-	-	-	-	-	-	-	-	-	-	-	-	32 300	16.12	38 600	16.30
	5400 rpm	20	23 100	8.51	28 400	8.84	34 700	9.23	42 200	9.64	50 900	10.05	60 900	10.42	72 500	10.71	-	-	-	-
		30	20 200	10.49	25 300	10.73	31 400	11.07	38 400	11.49	46 600	11.94	56 100	12.40	66 900	12.83	79 200	13.19	93 200	13.46
		40	-	-	22 500	12.90	28 100	13.12	34 600	13.46	42 200	13.89	50 900	14.36	60 800	14.86	72 200	15.33	85 000	15.75
		50	-	-	-	-	-	-	30 500	15.93	37 300	16.26	45 100	16.68	54 100	17.16	64 300	17.67	75 900	18.17
		60	-	-	-	-	-	-	-	-	-	-	38 600	19.71	46 500	20.11	55 600	20.58	65 900	21.09
		68	-	-	-	-	-	-	-	-	-	-	-	-	-	-	48 600	23.57	58 000	24.03
VSH170	1800 rpm	20	-	-	10 400	4.08	14 100	4.10	18 500	4.11	23 600	4.07	29 300	3.96	35 700	3.74	-	-	-	-
		30	-	-	8 600	5.30	12 000	5.31	16 000	5.34	20 500	5.37	25 600	5.36	31 200	5.29	37 500	5.12	44 300	4.84
		40	-	-	6 800	6.84	10 100	6.77	13 700	6.77	17 800	6.80	22 400	6.83	27 400	6.84	32 900	6.80	38 800	6.68
		50	-	-	-	-	-	-	11 300	8.70	15 100	8.67	19 200	8.68	23 700	8.71	28 500	8.73	33 700	8.71
		60	-	-	-	-	-	-	-	-	-	-	15 600	11.22	19 600	11.21	24 000	11.22	28 600	11.24
		68	-	-	-	-	-	-	-	-	-	-	-	-	-	-	-	-	-	-
	3600 rpm	20	22 000	8.23	27 200	8.35	33 400	8.47	40 600	8.56	49 200	8.60	59 000	8.58	70 400	8.46	-	-	-	-
		30	19 100	10.66	24 000	10.71	29 900	10.80	36 700	10.90	44 700	10.98	53 900	11.04	64 500	11.04	76 500	10.97	90 100	10.81
		40	-	-	21 100	13.26	26 500	13.27	32 800	13.32	40 100	13.39	48 500	13.48	58 200	13.54	69 200	13.57	81 600	13.55
		50	-	-	-	-	-	-	28 700	16.30	35 200	16.31	42 700	16.36	51 300	16.44	61 200	16.52	72 400	16.58
		60	-	-	-	-	-	-	-	-	-	-	36 300	20.17	43 900	20.21	52 600	20.28	62 500	20.37
		68	-	-	-	-	-	-	-	-	-	-	-	-	-	-	45 700	24.19	54 700	24.26
	5400 rpm	20	34 000	12.66	41 700	12.95	51 000	13.26	61 900	13.59	74 600	13.89	89 200	14.15	106 000	14.35	-	-	-	-
		30	29 700	16.01	37 200	16.21	46 000	16.48	56 300	16.79	68 100	17.11	81 800	17.43	97 400	17.72	115 000	17.96	134 900	18.12
		40	-	-	33 100	19.70	41 300	19.87	50 800	20.11	61 700	20.41	74 200	20.73	88 500	21.06	104 600	21.37	122 800	21.64
		50	-	-	-	-	-	-	44 900	24.13	54 800	24.34	66 000	24.61	78 800	24.93	93 400	25.26	109 800	25.60
		60	-	-	-	-	-	-	-	-	-	-	56 800	29.65	68 200	29.90	81 100	30.21	95 700	30.54
		68	-	-	-	-	-	-	-	-	-	-	-	-	-	-	71 100	35.30	84 500	35.60

To: Evaporating temperature in °C
Tc: Condensing temperature in °C
Qo: Cooling capacity in W

Superheat = 11.1 K
Subcooling = 8.3 K
Pe: Power input in kW

Presented data are for models with motor voltage code G

VSH088-G & H

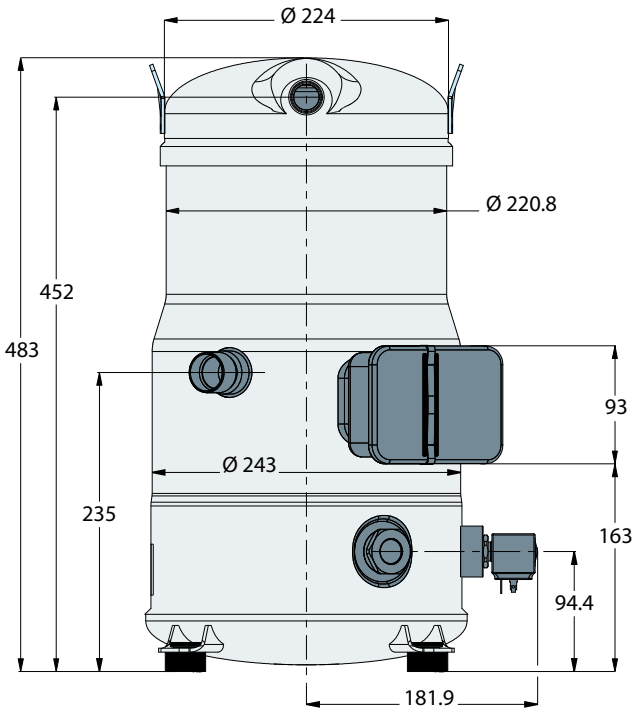

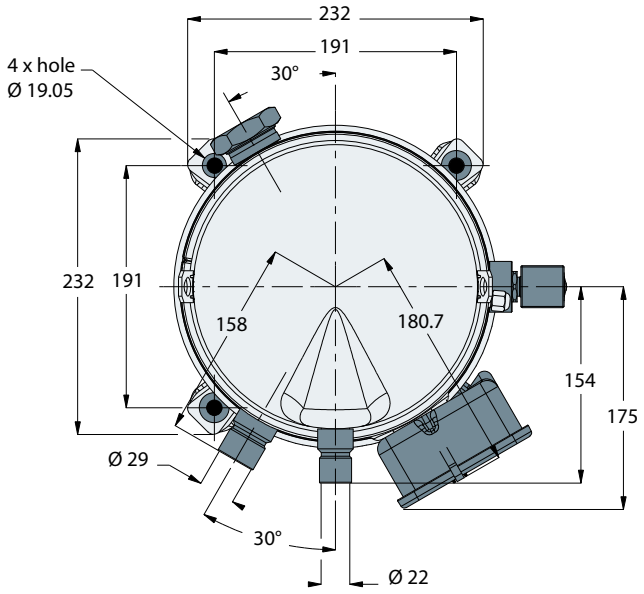

All dimensions in mm

Electrical box

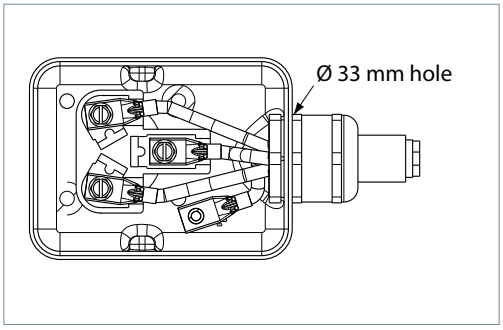

Grommet

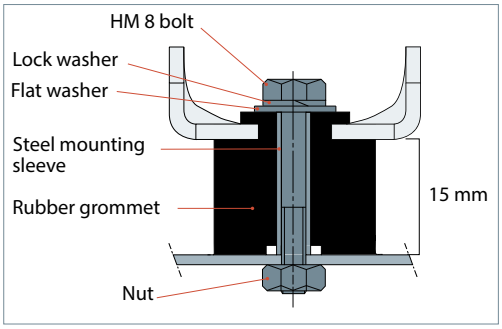

VSH088-J

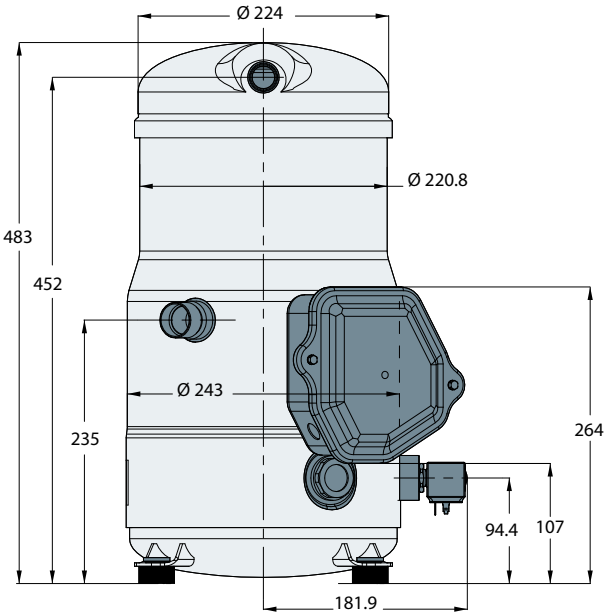

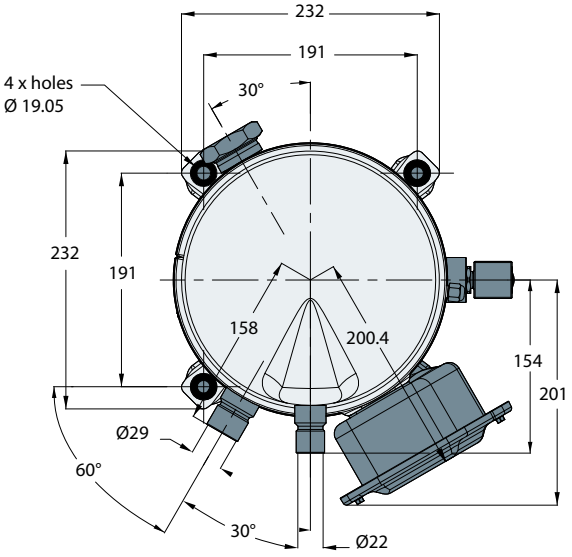

All dimensions in mm

Electrical box

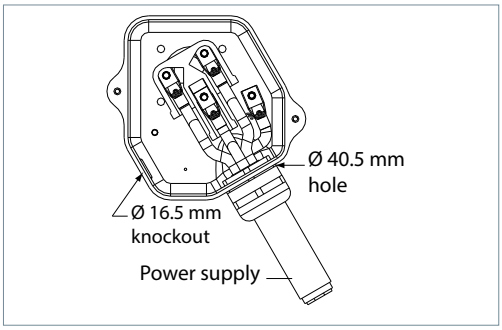

Grommet

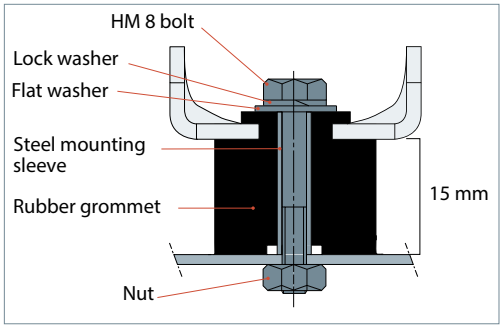

VSH117-G & H

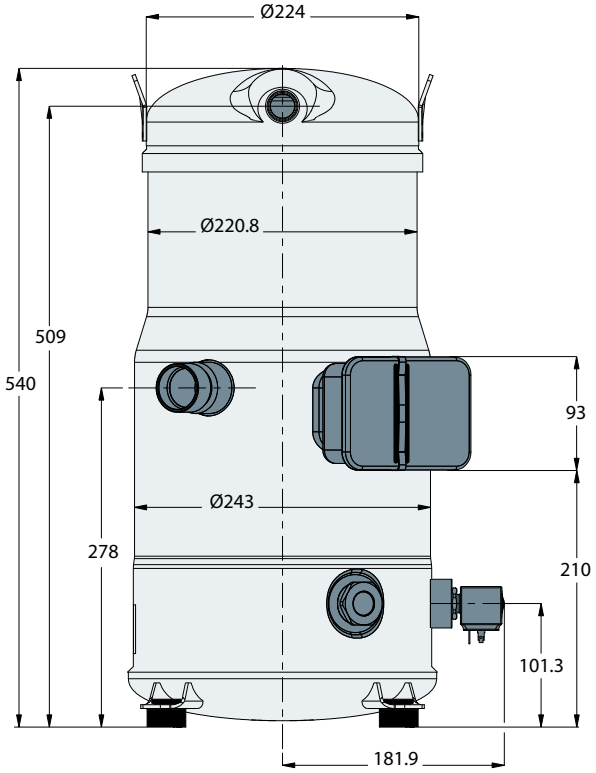

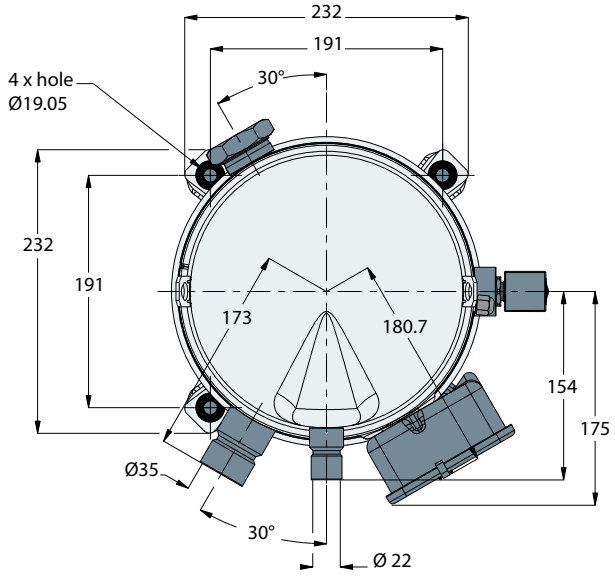

All dimensions in mm

Electrical box

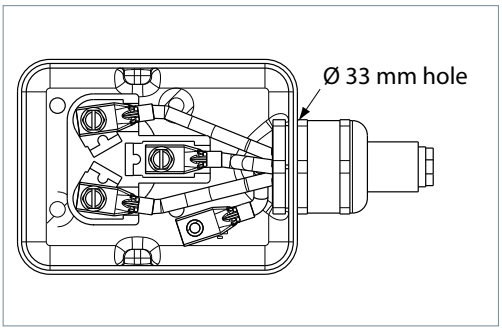

Grommet

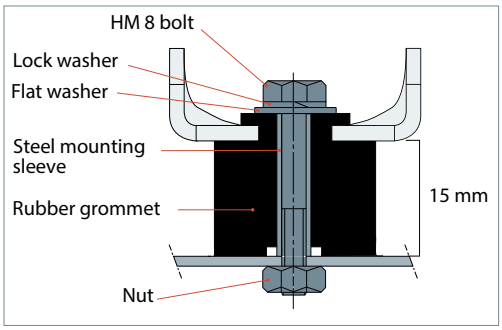

VSH117-J

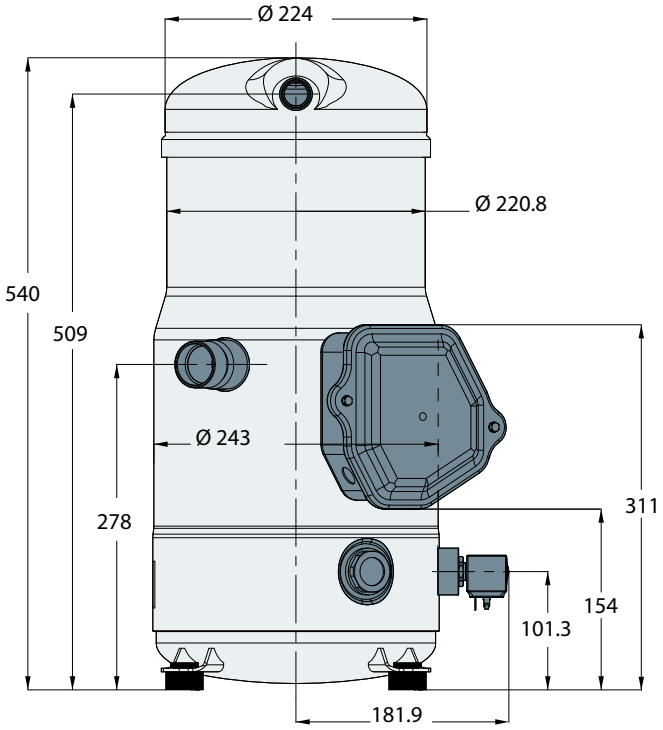

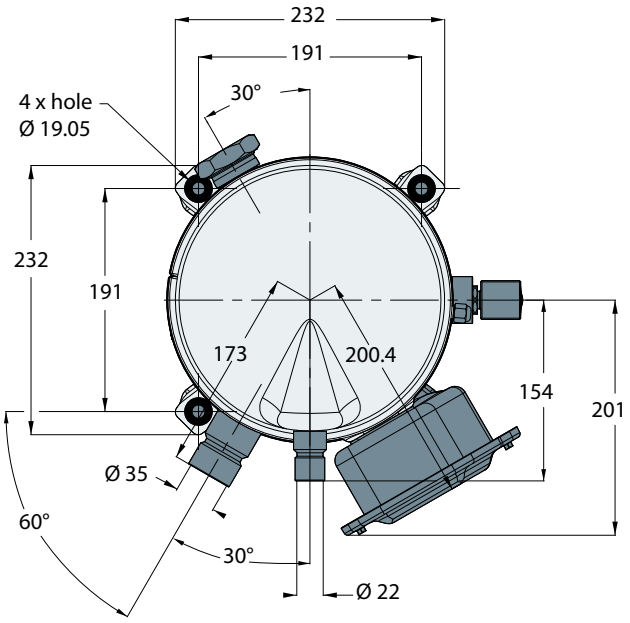

All dimensions in mm

Electrical box

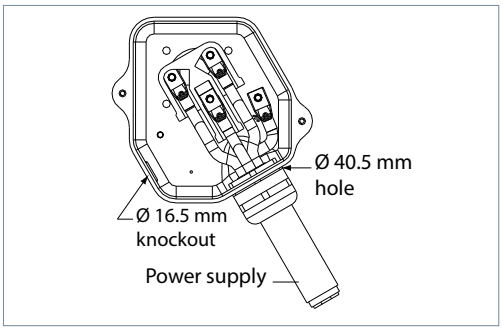

Grommet

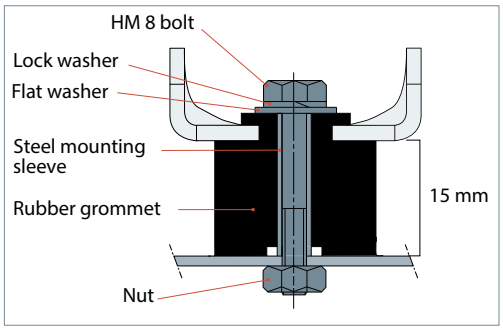

VSH170- G - H & J

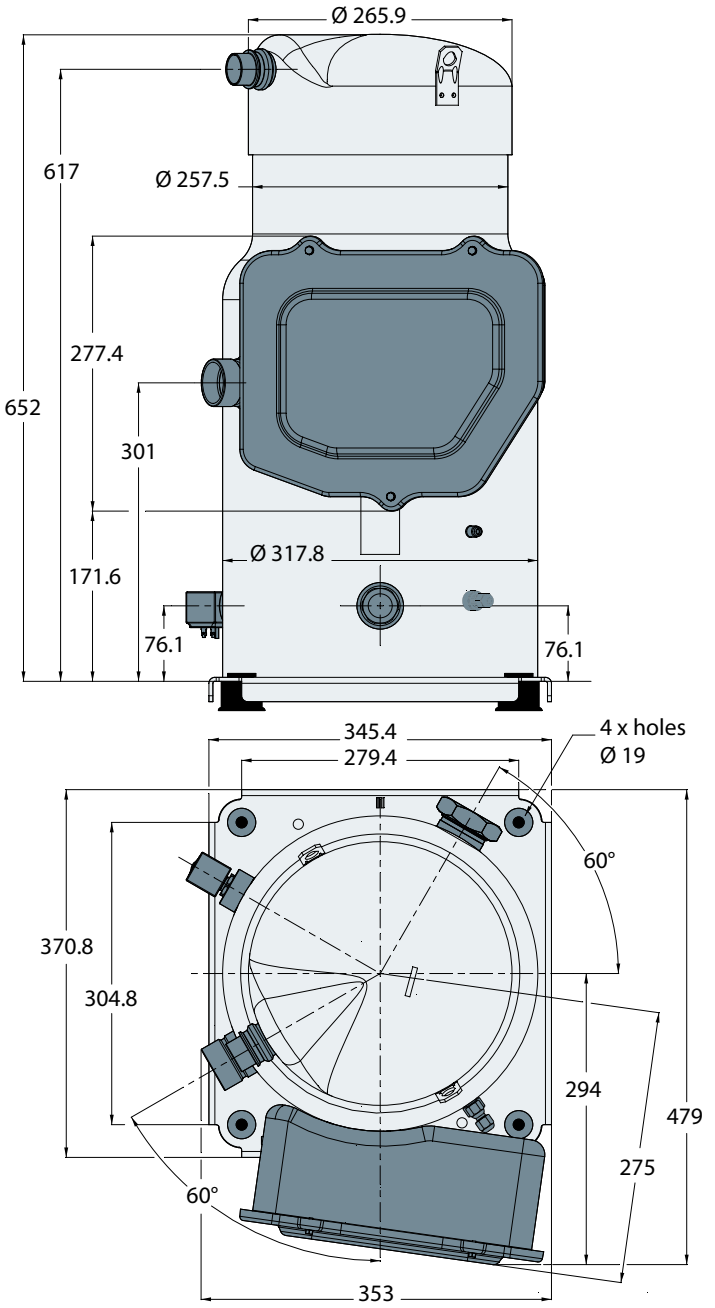

All dimensions in mm

Electrical box

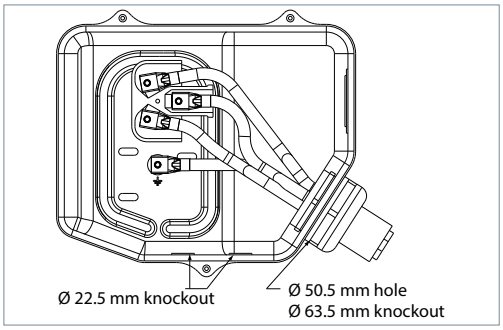

Grommet

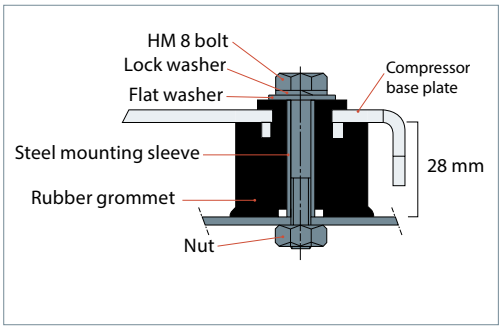

Sight glass

VSH compressors come equipped with a threaded oil sight glass with 1"1/8 – 18 UNEF connection. It can be used for visual check of oil amount and conditions, or it may be replaced by an oil management device.

Schrader

The oil fill connection and gauge port is a 1/4" male flare connector incorporating a schrader valve.

Oil equalisation connection

VSH compressors are equipped with rotolock oil equalisation connection. This connection is used when compressors are mounted in parallel. Contact Danfoss for further details.

	Oil equalization
VSH088	Rotolock 1" 3/4
VSH117	Rotolock 1" 3/4
VSH170	Rotolock 2" 1/4

Oil drain fitting

VSH170 are equipped with oil drain connection. This connection is a female ¼" SAE flare fitting, which allows oil to be removed for testing, replacement etc…

This fitting contains an internal extension tube in order to collect the oil at the bottom of the oil sump.

VSH088 and VSH117 are not equipped with oil drain fitting.

Suction & discharge connections

VSH compressors are all delivered with suction and discharge brazed connections only. They are copper platted steel connections.

Rotolock adaptors are available, refer to section "Accessories".

	Suction	Discharge
VSH088	1" 1/8	7/8"
VSH117	1" 3/8	7/8"
VSH170	1" 5/8	1" 1/8

Frequency converter dimensions

Frequency converter dimensions depend on supply voltage, IP rating and power. The below table gives an overview of the overall dimensions and different drive enclosures (B1 - C3). Details for each drive enclosure are on the following pages.

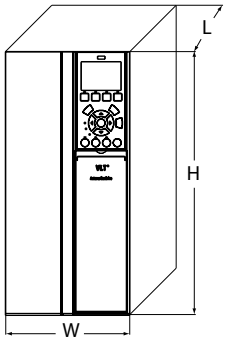

Drive supply voltage	Drive power kW	Compressor voltage code	Compressor model	IP20			IP55		
				Drive enclosure	Overall drive size (HxWxL) mm	Net weight (kg)	Drive enclosure	Overall drive size (HxWxL) mm	Net weight (kg)
T2: 200-240/3/50-60	15	J	VSH088	B4	595x231x242	23.5	C1	680x308x310	45
	18.5		VSH117	C3	630x308x334	35	C1	680x308x310	45
	22		VSH170	C3	630x308x334	35	C1	680x308x310	45
T4: 380-480/3/50-60	15	G	VSH088	B3	419x165x248	12	B1	480x240x260	23
	18.5		VSH117	B4	595x231x242	23.5	B2	650x242x260	27
	22		VSH170	B4	595x231x242	23.5	B2	650x242x260	27
T6: 525-600/3/50-60	15	H	VSH088	B3	419x165x248	12	B1	480x240x260	23
	18.5		VSH117	B4	595x231x242	23.5	B2	650x242x260	27
	22		VSH170	B4	595x231x242	23.5	B2	650x242x260	27

CDS302 frequency converter - enclosure B1
380-480 Volts - 15 kW - IP55 housing
525-600 volts - 15 kW - IP55 housing

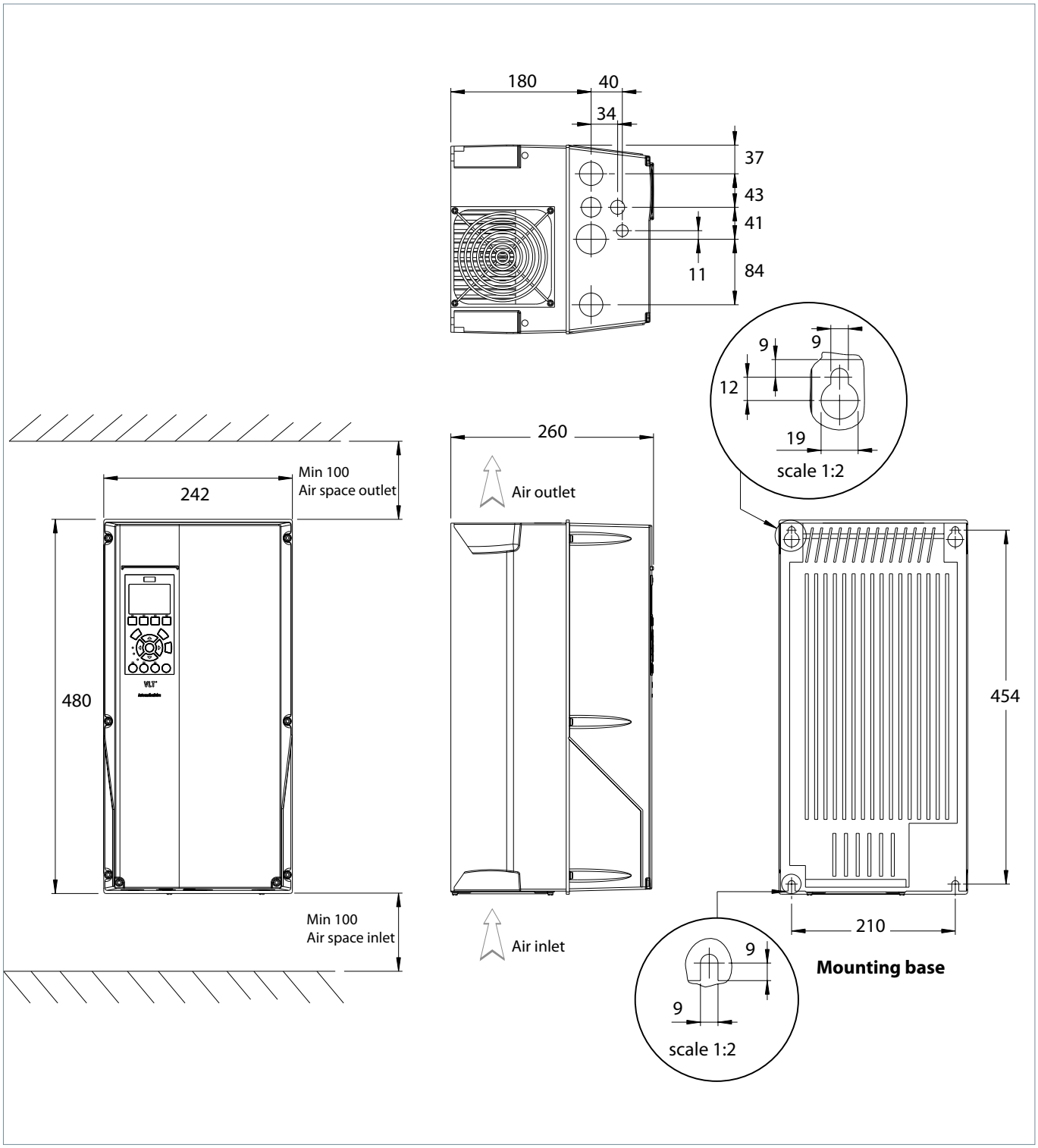

CDS302 frequency converter - enclosure B2
380-480 volts – 18-22 kW - IP55 housing
525-600 volts – 18-22 kW - IP55 housing

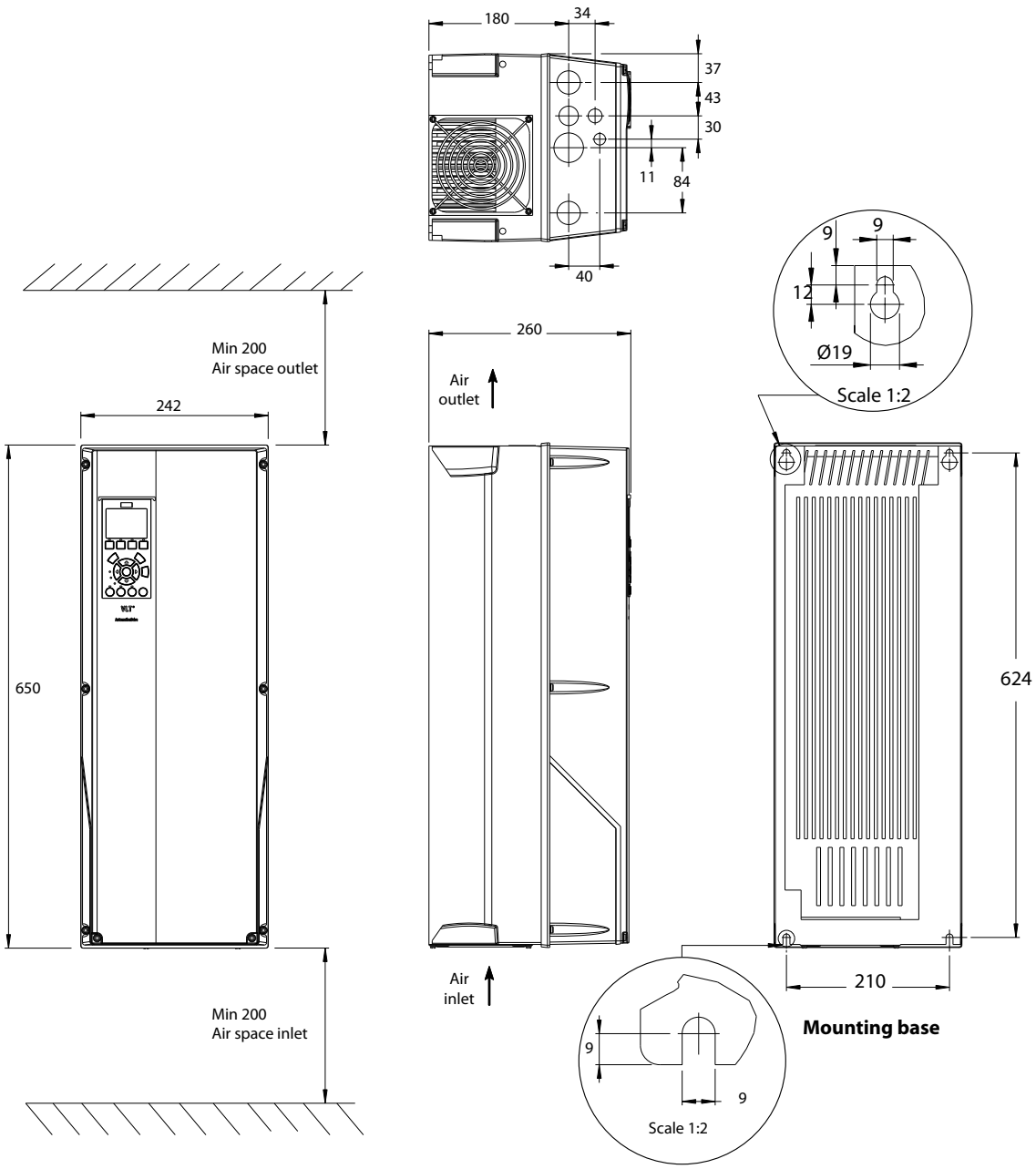

CDS302 frequency converter - enclosure B3
380-480 volts - 15 kW - IP20 housing
525-600 volts - 15 kW - IP20 housing

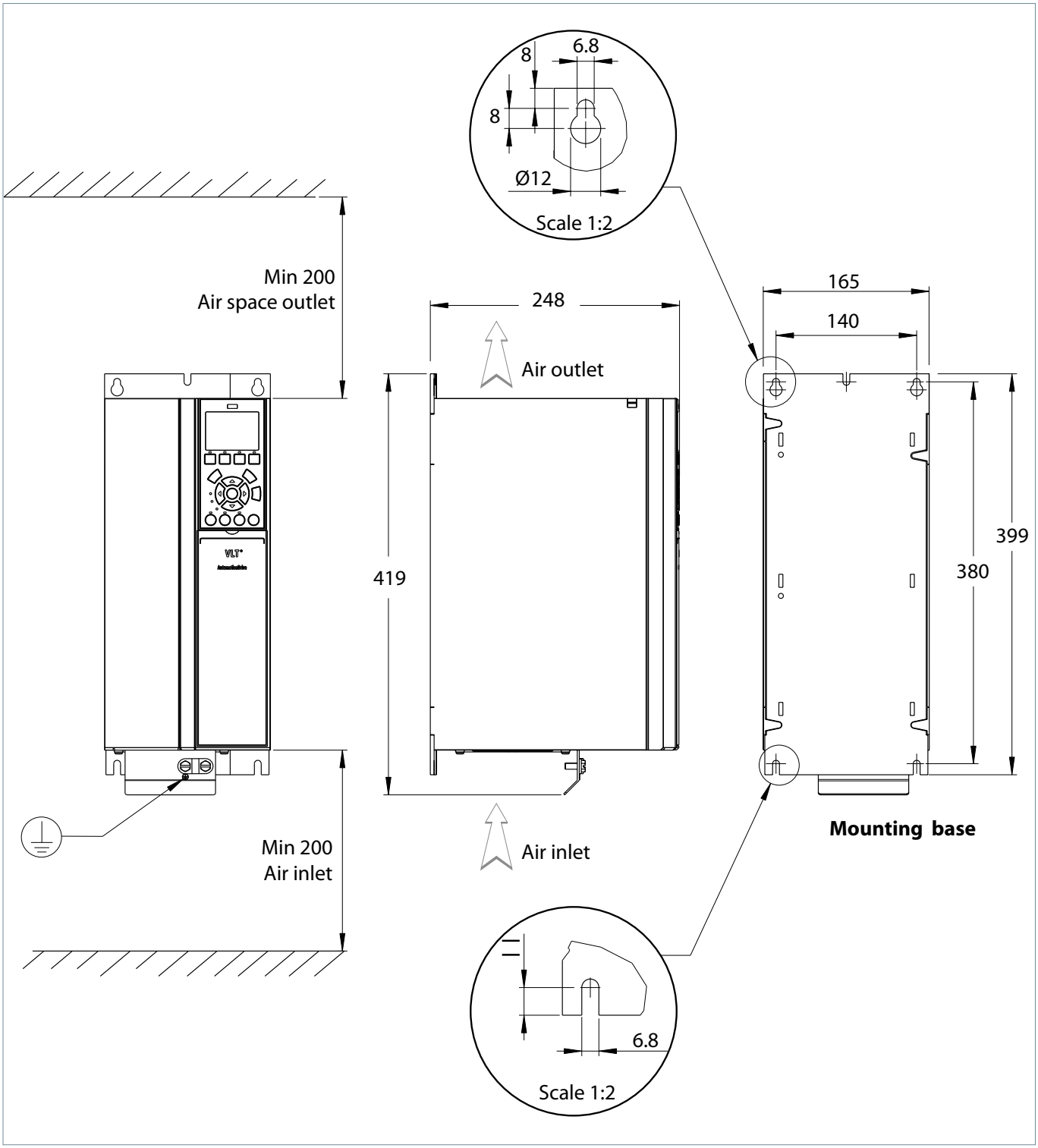

CDS302 frequency converter - enclosure B4
380-480 volts – 18-22 kW - IP20 housing
525-600 volts – 18-22 kW - IP20 housing
200-240 volts – 15 kW - IP20 housing

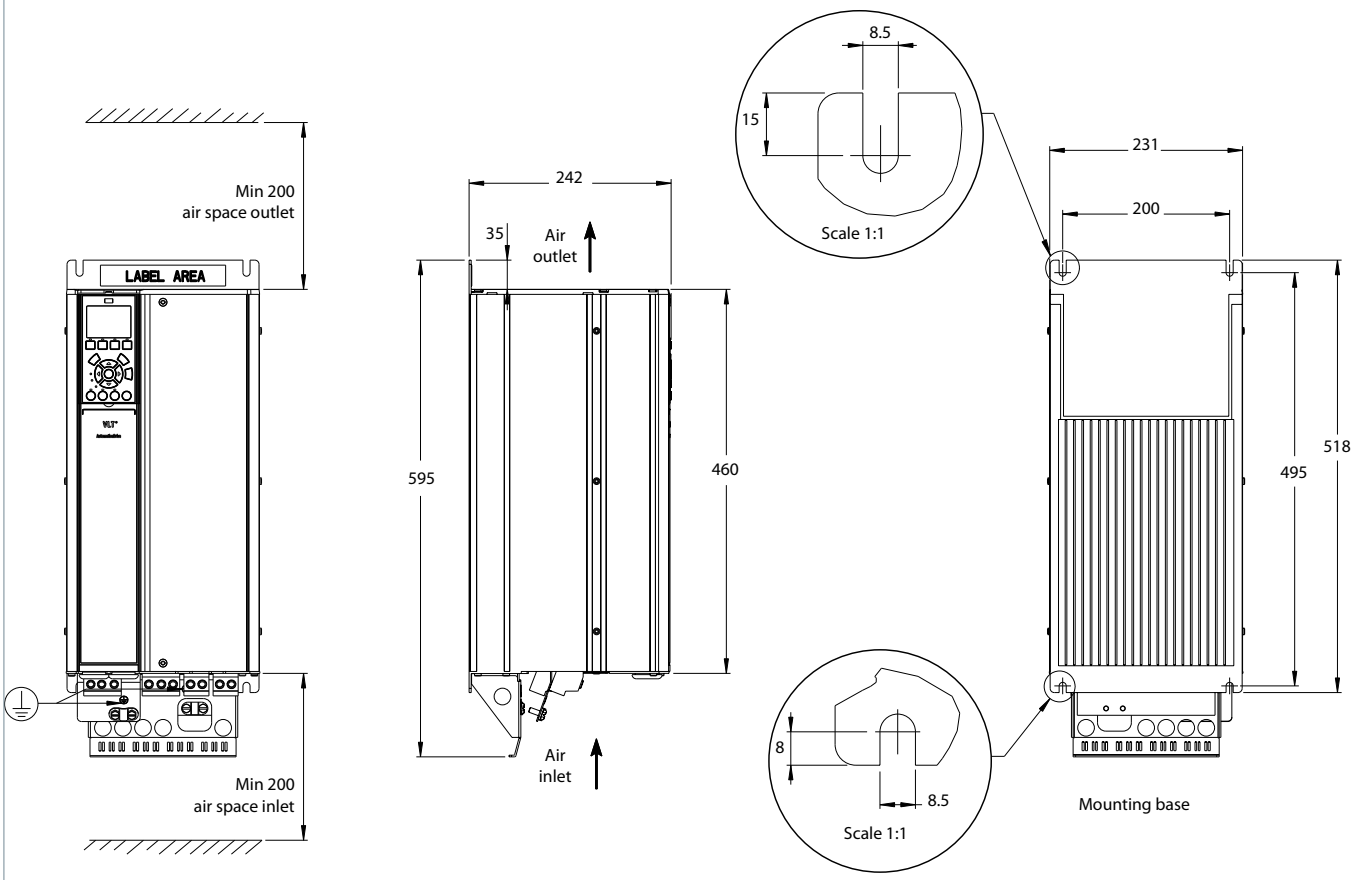

CDS302 frequency converter - enclosure C1
200-240 volts – 15-18-22 kW - IP55 housing

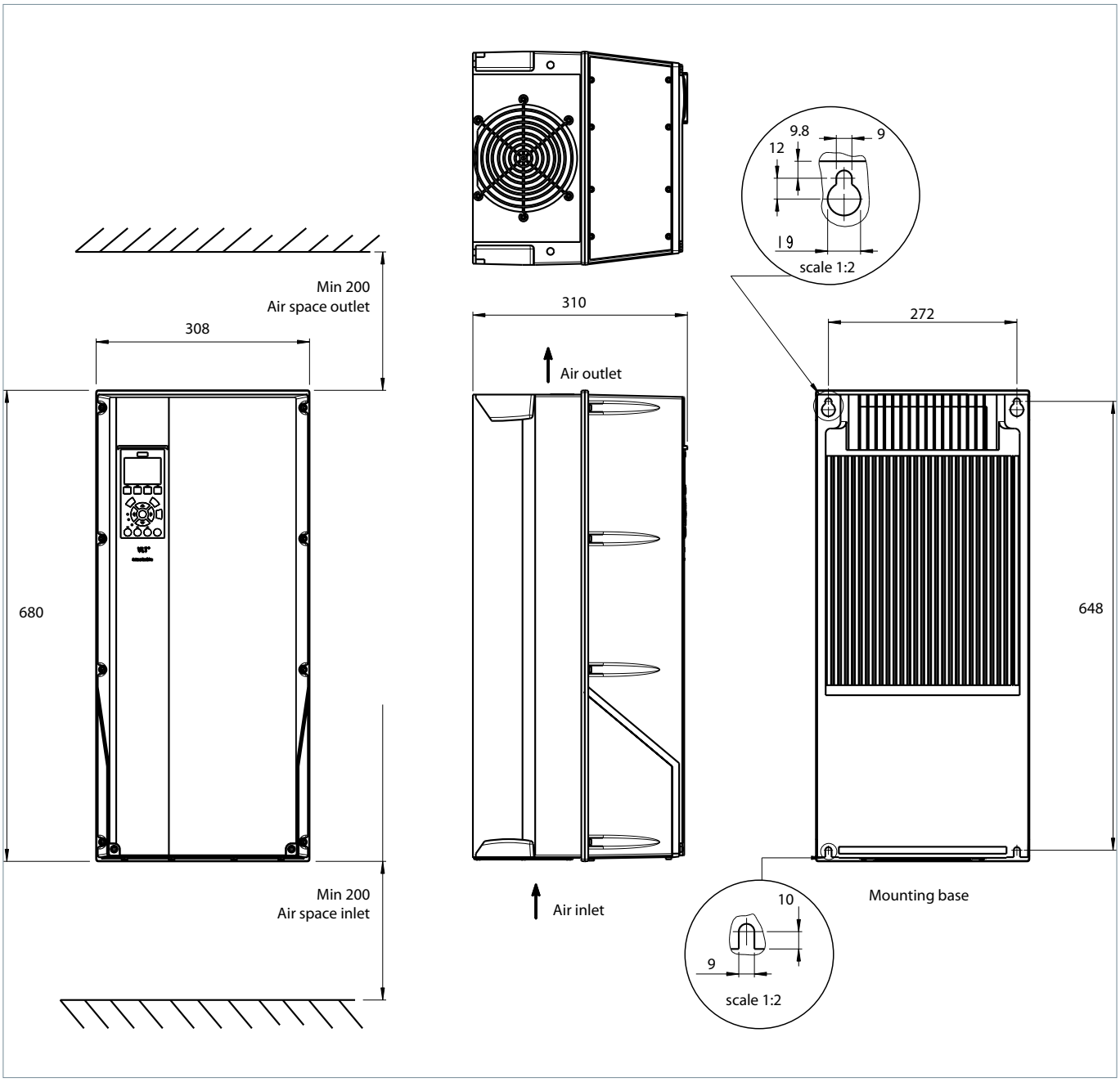

CDS302 frequency converter - enclosure C3
200-240 volts – 18-22 kW - IP20 housing

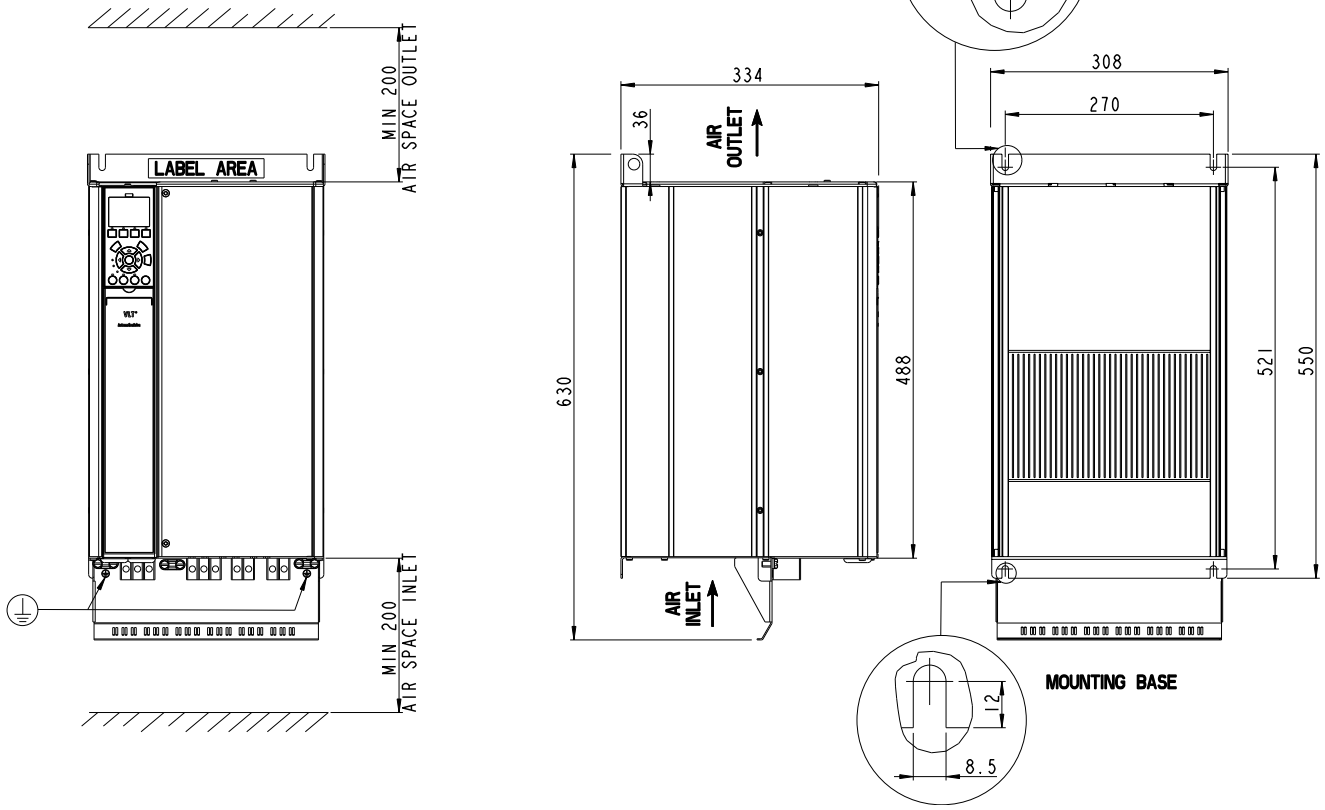

Supply voltage

Because VSH compressors are powered by a frequency converter, the mains frequency, 50 or 60 Hz, is no longer an issue. Only the mains voltage is to be taken into account. With 3 motor voltage codes, the most common mains voltages and frequencies are covered. Never connect the VSH compressor directly to the mains power supply.

Voltage code	Mains voltage range of drive
J	200-240 V / 3 ph / 50 Hz & 200-240 V / 3 ph / 60 Hz (±10%)
G	380-480 V / 3 ph / 50 Hz & 380 - 480 V / 3 ph / 60 Hz (±10%)
H	525-600 V / 3 ph / 50 Hz & 525-600 V / 3 ph / 60 Hz (±10%)

Compressor electrical specifications

	Compressor	Nominal motor power (kW)	RW (Ohm)	RLA (A)	MMT (A)
200 - 240 Volt	VSH088-J	14	0.0191	61.5	76.9
	VSH117-J	18.4	0.0138	80	100
	VSH170-J	26.8	0.0280	120	150
380 - 480 Volt	VSH088-G	15.1	0.26	29.9	37.4
	VSH117-G	18.4	0.185	37.7	47.1
	VSH170-G	27.4	0.127	57.3	71.6
525 - 600 Volt	VSH088-H	12.8	0.518	21	26.3
	VSH117-H	18.3	0.366	30.8	38.5
	VSH170-H	27	0.238	44	55.0

RW: Winding resistance per winding (in CDS302 parameter list)
RLA: Rated load current
MMT: Maximum must trip current
LRA: Locked rotor current
Note that parameter 1-30 in the frequency converter settings reflects the winding resistance per winding. This is not the same value as measured at the motor terminals.

LRA (Locked Rotor Amp)

Locked Rotor Amp value is the higher average current as measured on mechanically blocked compressor tested under nominal voltage. As required by UL regulation, this value is printed on the nameplate. This current value can not be achieved in the case of VSH compressors, because the frequency converter will cut-out the mains before, according to MMT value.

RLA (Rated Load Amp)

Rated Load Amp value is the current value at maximum load, in the operating envelope, and at maximum speed.

MMT (Maximum Must Trip current)

The Maximum Must Trip current is defined for compressors not equipped with their own motor protection. This MMT value is the maximum at which the compressor can be operated in transient conditions and out of the operating envelope. The tripping current of external over-current protection must never exceed the MMT value.

For VSH compressors, according to UL requirements, MMT value is 125% of RLA. This value is printed on the compressor nameplate.

Fuses

Frequency converter		EN50178 compliant fuses		UL Compliant fuses					
				Bussmann			SIBA	Little fuse	
		Size	Type	Type RK1	Type J	Type T	Type RK1	Type RK1	Type RK1
200-240 V	CDS-15kW	125 A	gG	KTN-R125	JKS-150	JJN-125	2028220-125	KLN-R125	A2K-125R
	CDS-18.5 kW	125 A	gG	KTN-R125	JKS-150	JJN-125	2028220-125	KLN-R125	A2K-125R
	CDS-22 kW	160 A	gG	FWX-150	-	-	2028220-150	L25S-150	A25X-150
380-480 V	CDS-15 kW	63 A	gG	KTS-R50	JKS-50	JJS-50	5014006-050	KLS-R50	A6K-50R
	CDS-18.5 Kw	63 A	gG	KTS-R60	JKS-60	JJS-60	5014006 -063	KLS-R60	A6K-60R
	CDS-22 kW	80 A	gG	KTS-R80	JKS-80	JJS-80	2028220-100	KLS-R80	A6K-80R
525-600 V	CDS-15 kW	-	-	KTS-R50	JKS-50	JJS-50	5014006-050	KLS-R50	A6K-50R
	CDS-18.5 kW	-	-	KTS-R60	JKS-60	JJS-60	5014006-063	KLS-R60	A6K-60R
	CDS-22 kW	-	-	KTS-R80	JKS-80	JJS-80	2028220-100	KLS-R80	A6K-80R

Wire sizes

Below table lists recommended wiring sizes for the motor compressor power supply cables. These wiring sizes are valid for a cable length up to 20 m.

	From network to frequency converter			From frequency converter to compressor		
	Type	mm²	AWG	Type	mm²	AWG
200 - 240 V	CDS-15kW	16	6	VSH088-J	25	4
	CDS-18.5 kW	25	4	VSH117-J	25	4
	CDS-22 kW	35	2	VSH170-J	50	1
380 - 400 V	CDS-15 kW	6	10	VSH088-G	6	10
	CDS-18.5 Kw	10	8	VSH117-G	10	8
	CDS-22 kW	16	6	VSH170-G	16	6
525 - 600 V	CDS-15 kW	4	12	VSH088-H	4	12
	CDS-18.5 kW	6	10	VSH117-H	6	10
	CDS-22 kW	10	8	VSH170-H	10	8

Wiring & EMC protection

The motor compressor power supply from the CDS302 frequency converter to the VSH compressor must be done with a braided screened / armored cable. This cable needs to have its screen / armor conduit connected to earth on both ends. Avoid terminating this cable connection with twisting ends (pigtails) because that would result in an antenna phenomena and decreases the effectiveness of the cable.

Control cables to the CDS302 frequency converter must use the same installation principles as the power supply cable.

The motor compressor cable must be installed in a conduit separate from the control and mains cables.

Physical installation of the frequency converter on the mounting plate must ensure good electrical contact between the mounting plate and the metal chassis of the converter. Use star-washers and galvanically conductive installation plates to secure good electrical connections. Refer to instructions MG.34.M1.02 for tightening torques and screw sizes.

Note that the CDS302 must be mounted on a plain wall to ensure a good air flow through its heat exchanger.

Hipot test procedure

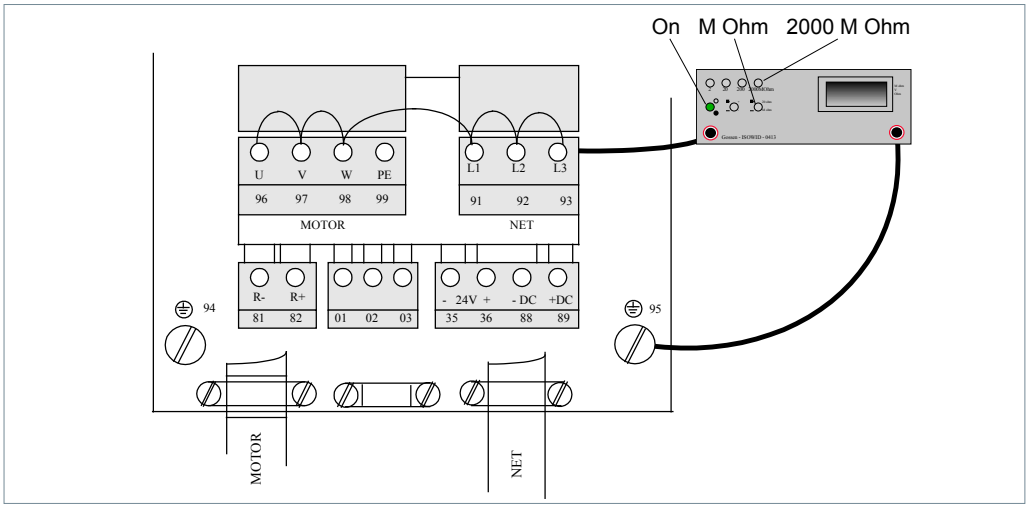

It is not necessary to perform a Hipot test (dielectric withstand test) on frequency converters. This has already been done during factory final test.

If a Hipot test has to be done anyway, following instructions must be followed in order to not damage the frequency converter:

- Compressor not connected
- L1, L2, L3, U, V, W terminals must be shorten and connected to high voltage terminal of the testing device.
- Ground terminal (chassis) must be connected to low voltage terminal of the testing device.
- 2150VDC must be applied
- Ramp up time 3 seconds
- Full DC voltage must be established during 2 seconds
- The current leakage during the test must be below 1mA
- Ramp down time to 0V in 25 seconds.

EMC correct installation of an IP20 frequency drive CDS302

EMC qualification reports are available upon request to Danfoss technical support.

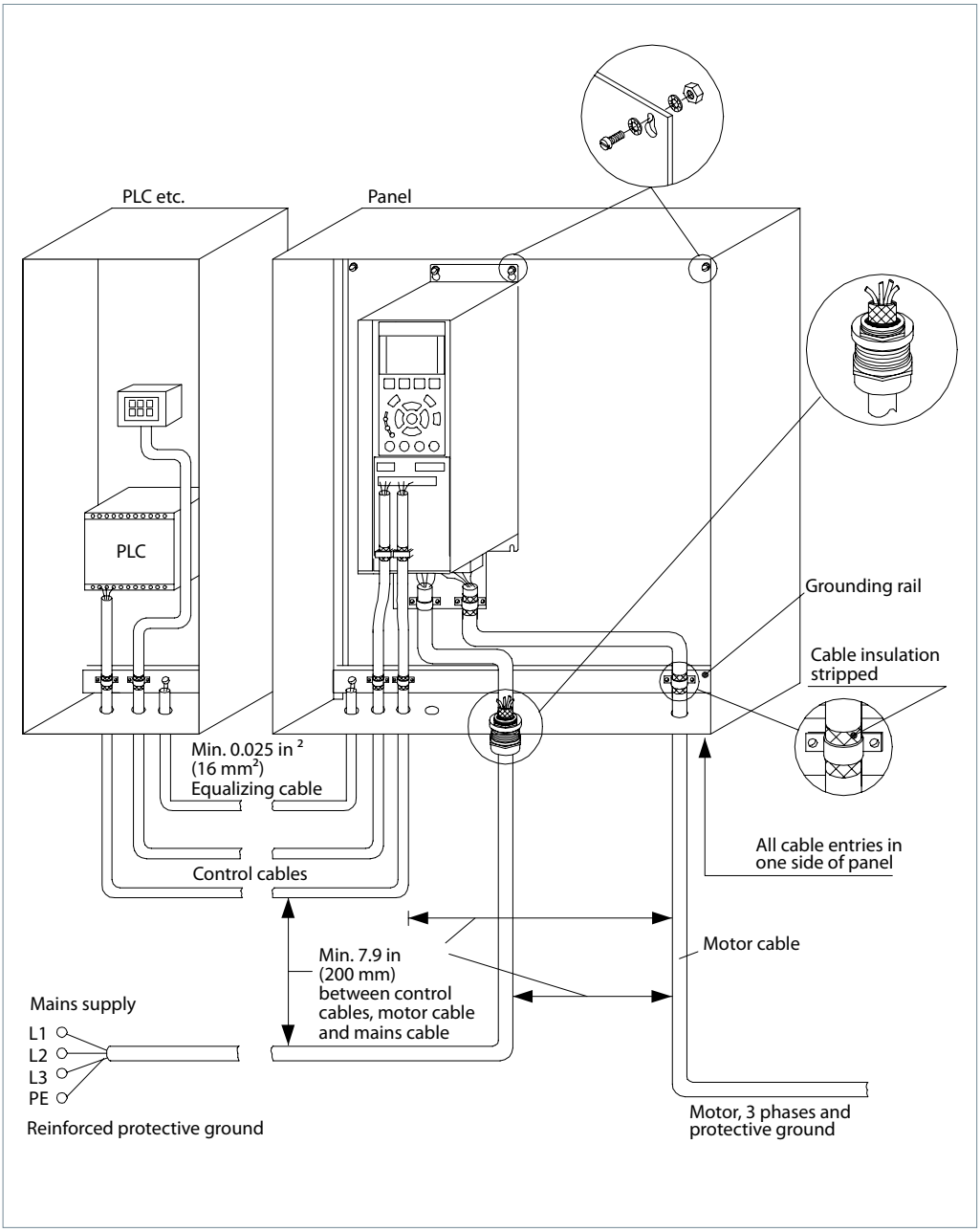

Wiring diagram

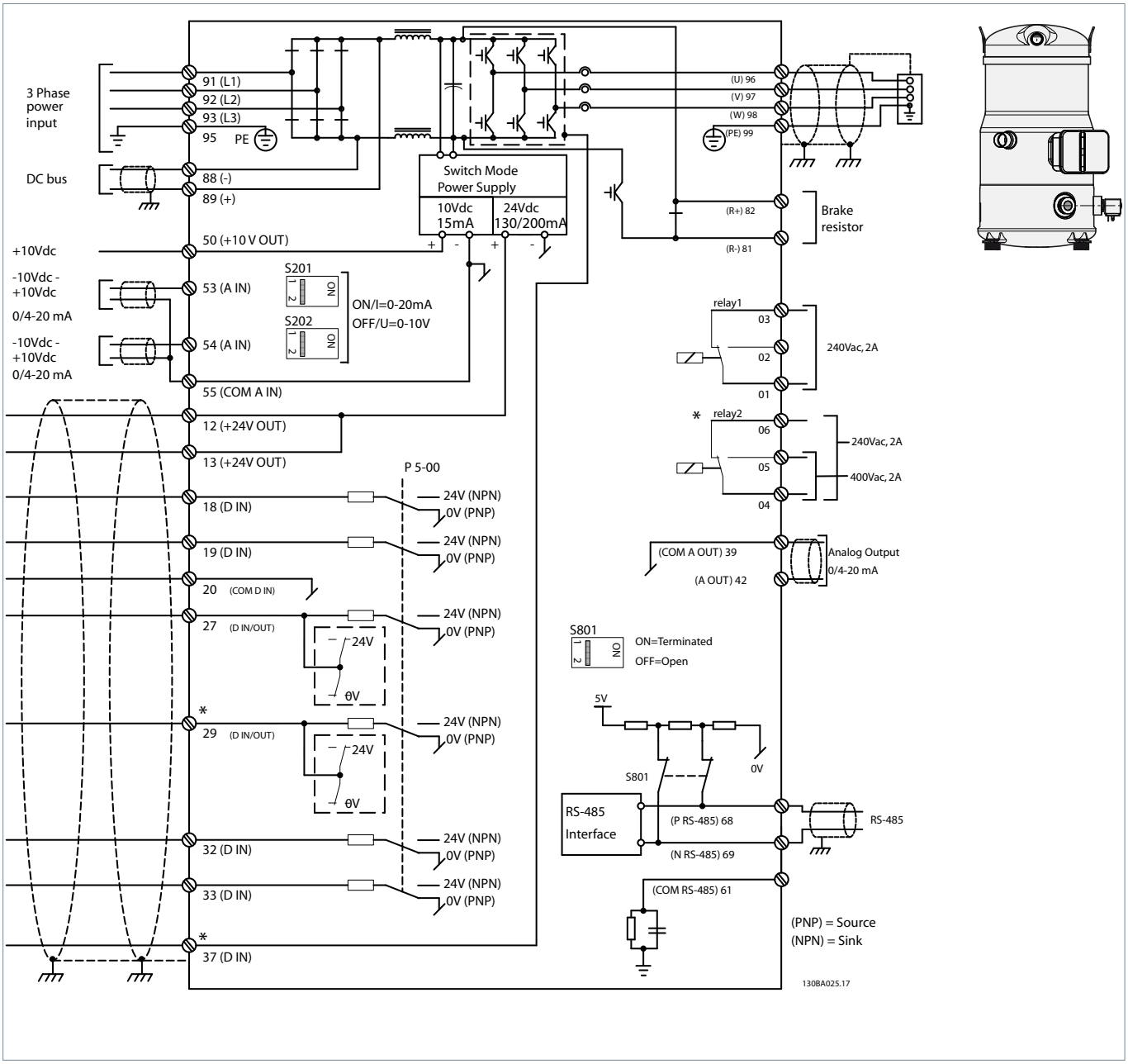

Wiring connections

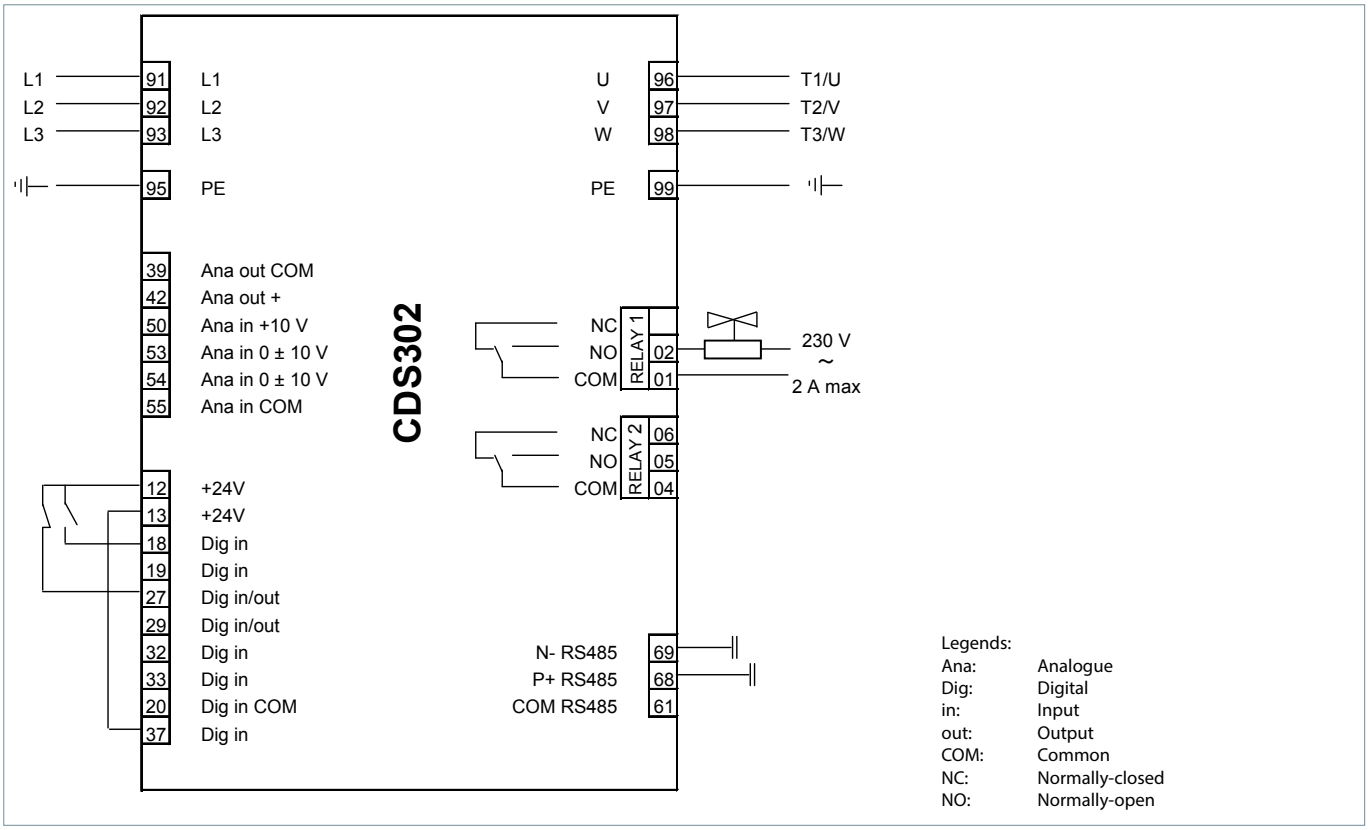

		Open loop	Process loop
91, 92, 93	3 Phase mains input	X	X
95	Earth	X	X
39, 42	Analogue output	-	-
50	Analogue input	-	-
53	PLC+ (0 to 10 V)	X	-
54	Sensor -	-	X
55	PLC-	X	-
12	HP/LP switch	X	X
12	External On/Off (NO)	X	X
13	Factory bridged to 37	X	X
13	Sensor +	-	X
18	External On/Off (NO)	X	X
19	Digital input	-	-
27	HP/LP switch (NC) / safety devices	X	X
29	Digital input/output	-	-
32, 33	Digital input	-	-
20	Digital input Common	-	-
37	Factory bridged to 13	X	X
98	To compressor terminal T3	X	X
97	To compressor terminal T2	X	X
96	To compressor terminal T1	X	X
99	To compressor earth connection	X	X
02, 01	Relay 1 to oil solenoid valve	X	X
06, 05, 04	Relay 2	-	-
69, 68	RS485 Bus	-	-
61	RS485 Bus Common	-	-

- : Optional connection
X : Mandatory connection

The CDS302 frequency converter is factory preset with parameters for the open loop control principle. The process loop control principle can be selected by changing parameters in the "Quick menu".

Open loop: preset on input 53
0 - 10 V control
Frequency converter in slave mode

Process loop: preset on input 54
4 - 20 mA control
Frequency converter under own PID controller

Electrical connections

Electrical power is connected to the compressor terminals by Ø 4.8 mm (3/16") screws. The maximum thightening torque is 3 Nm. Use a 1/4" ring terminal on the power leads.

The cable gland has to be of EMC design to garanty a good grounding of the armored cable. Paint free areas on electrical box allow correct ground continuity.

Soft-start control

The CDS302 frequency converter generates by design a compressor soft start with an initial ramp up of 0.9 sec.
Current inrush is at highest the frequency converter maximum current.

Basically seen from the mains the inrush peak reach a level which is only a few percent more than the rated nominal current.

Phase sequency and reverse rotation protection

The CDS302 frequency converter is preset to run the VSH compressors clockwise so the only care is to well connect the CDS302 output to the compressor connectors:

- CDS302 terminal U (96) to VSH terminal T1/U
- CDS302 terminal V (97) to VSH terminal T2/V
- CDS302 terminal W (98) to VSH terminal T3/W

Mains connection to the CDS302 frequency converter order has no influence on the output phase sequence which is managed by the frequency converter.

IP rating

The compressor terminal box IP rating according to CEI529 is IP54 when correctly sized IP54 rated cable glands are used.

Motor protection

Motor protection is provided by the frequency converter. All parameters are factory preset in order to guaranty locked rotor or overload current protection.

When a warning situation is reached in the current control, the CDS302 frequency converter will automatically reduce the compressor speed in order to keep the motor current of the compressor below the maximum allowed.

Voltage imbalance

The maximum allowable voltage imbalance between each phases is 3%. Voltage imbalance causes high amperage over one or several phases, which in turn leads to overheating and possible drive damage.

Mains imbalance function in CDS302 frequency converter can be set to “[0] Trip” or “[1] Warning” in 14.12 parameter. It is, by default, factory preset to “[1] Warning”.

Frequency converter efficiency

Drive supply voltage	Drive power kW	Compressor voltage code	Compressor model	IP20 / IP55		
				Drive enclosure	Estimated power loss at max load (W)	Efficiency
T2: 200-240/3/50-60	15	J	VSH088	B4 /C1	624	0.96
	18.5		VSH117	C3 /C1	740	0.97
	22		VSH170	C3 /C1	874	0.97
T4: 380-480/3/50-60	15	G	VSH088	B3 / B1	379	0.98
	18.5		VSH117	B4 / B2	444	0.98
	22		VSH170	B4 / B2	547	0.98
T6: 525-600/3/50-60	15	H	VSH088	B3 / B1	285	0.98
	18.5		VSH117	B4 / B2	329	0.98
	22		VSH170	B4 / B2	700	0.98

Ambient temperature and altitude

The normal ambient temperature supported by the frequency converter covers a range from -10°C to +50°C without any issue or derating. Anyhow, the frequency converter will operate normally down to -20°C where only the screen of the LCP (if installed) will show display issues without being damaged.

For ambient temperatures above +50°C, it is mandatory to integrate a derating output factor for the maximum compressor electrical motor power/current. The derating values are shown in the drive application manual and are linked to the drive frame and IP protection level.

For altitudes below 1000 m, the frequency converter will be able to deliver 100% output power under full load for above ambient temperature. However, for altitudes above 1000 m derating must be applied with following values.

Altitude	Derating factor
1000 m	1
1500 m	0.95
2000 m	0.90
2500 m	0.86
3000 m	0.82
3500 m	0.78

For more details about these specific running conditions, please contact Danfoss technical support.

Approvals and certificates

VSH compressors comply with the following approvals and certificates.

CE 0062 or CE 0038 (European Directive)	CE	All VSH models except code H
UL (Underwriters Laboratories)	c UL us	All VSH models
EMC 2014/30/EU		All VSH models

Pressure equipment directive 2014/68/EU

Products	VSH088	VSH117	VSH170
Fluids		Group 2	
Category PED		II	
Evaluation module		D1	
TS - service temperature LP	-35°C < TS < +55°C		-35°C < TS < +51°C
PS - service pressure LP	33.3 bar(g)	33.3 bar(g)	30.2 bar(g)

Low voltage directive 2014/35/EU

Products	VSH088-117-170
Declaration of conformity ref. Low voltage directive 2014/35/EU	Contact Danfoss

Internal free volume

Products	Internal free volume at LP side without oil (litre)
VSH088	11
VSH117	12.8
VSH170	28.7

Application envelope

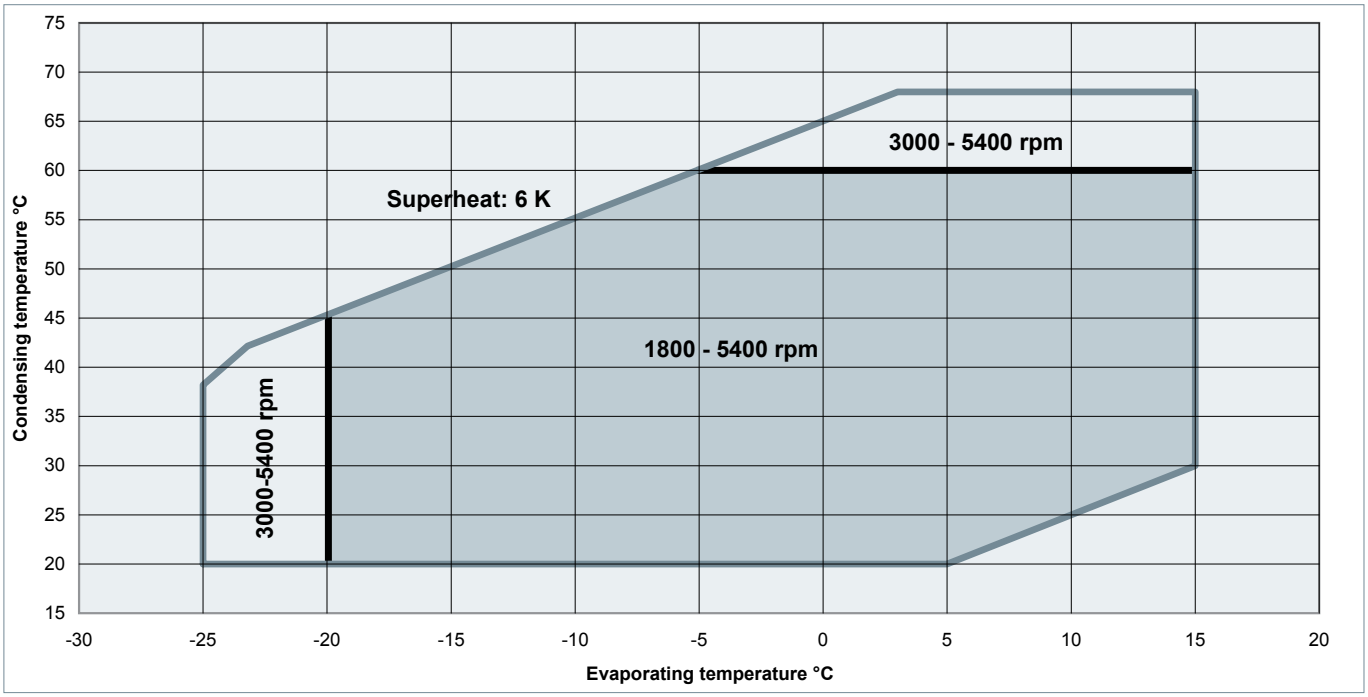

Short cycle timer function	Short cycle control is directly provided by the CDS302 frequency converter, when parameter 28.0* is enabled. The function is factory set to enabled, with minimum running time 12 seconds and interval between starts 300 seconds.	Short cycle settings are accessible in parameter 28.0* list, in the “compressor functions” menu.
Discharge gas temperature protection function	A discharge temperature monitor function can be enabled in the frequency converter. All settings are available in parameter list 28.2*, they are factory preset as follow: • 28.20: [0] none - temperature source (sensor input) • 28.21: [60] °C - temperature unit • 28.24: 130 - warning level • 28.25: [1] decrease cooling - warning action • 28.26: 145 - emergency level • 28.27: is the actual discharge temperature measured by the sensor.	To activate the discharge temperature monitor function, with the factory setting, the only modification required is to connect the sensor to Analog Input 54 (4.20 mA) between 13 and 54, and set the parameter 28.20 to “[2] Analog input 54”. When the warning level is reached “decrease cooling” action starts by decreasing the compressor speed by steps of 600 rpm (10 Hz) every 3 minutes until the temperature, either drops below the level, programmed in parameter 28.24 (warning level) or exceed the level programmed in parameter 28.26 (emergency level). When the emergency level is reached, the compressor is stopped and the frequency converter shows an “alarm”.

Discharge gas thermostat

Discharge gas temperature (DGT) protection is required if the high and low pressure switch settings do not protect the compressor against operations beyond its specific application envelope. Please refer to the examples below, which illustrate where DGT protection is required (Ex. 1) and where it is not (Ex. 2).

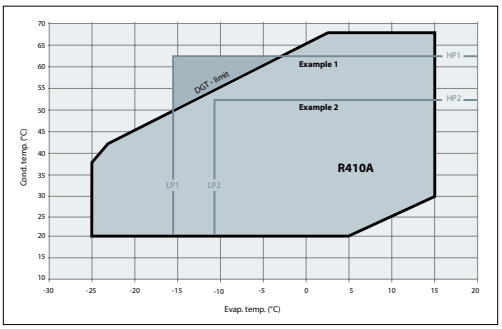

Example 1 (R410A, SH = 11 K)
LP switch setting:
LP1 = 3.3 bar (g) (-15.5°C)
HP switch setting:
HP1 = 38 bar (g) (62°C)
Risk of operation beyond the application envelope.
DGT protection required.

Example 2 (R410A, SH = 11 K)
LP switch setting:
LP2 = 4.6 bar (g) (-10.5°C)
HP switch setting:
HP2 = 31 bar (g) (52°C)
No risk of operation beyond the application envelope.
No DGT protection required.

The discharge gas temperature must not exceed 135°C.

A discharge gas temperature protection device must be installed on all heat pumps. In reversible air-to-air and air-to-water heat pumps the discharge temperature must be monitored during development test by the equipment manufacturer.

The compressor must not be allowed to cycle on the discharge gas thermostat. Continuous operations beyond the compressor's operating range will cause serious damage to the compressor!

A DGT accessory is available from Danfoss: refer to accessories pages at the end of this document.

The discharge gas thermostat accessory kit (code no.7750009) includes all components required for installation, as shown below. The thermostat must be attached to the discharge line within 150 mm from the compressor discharge port and must be thermally insulated and tightly fixed on the pipe.

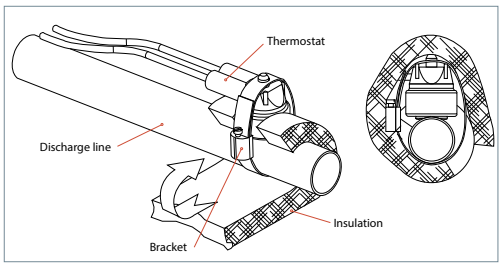

Oil return management function

Insufficient oil level can be the result of oil depositing itself in pipes and heat exchangers. The oil deposit can be returned to the crankcase, by increasing velocity for short period, at regular time intervals or when velocity is too low to ensure adequate oil returns.

With oil return management these two oil return mechanisms can be programmed in the CDS302.

Refer to section "Oil level checking and top-up" at the end of this document for details.

High and low pressure protection

High pressure

According to EN378-2, a high-pressure (HP) safety switch is required to shut down the compressor. The high-pressure switch can be set to lower values depending on the application and ambient conditions. The HP switch must either be placed in a lockout circuit or consist of a manual reset device to prevent cycling around the high-pressure limit. If a discharge valve is used, the HP switch must be connected to the service valve gauge port, which must not be isolated. The lockout circuit or HP switch must be connected to the CDS302 input 27.

Low pressure

A low-pressure (LP) safety switch must be used. Deep vacuum operations of a scroll compressor can cause internal electrical arcing and scroll instability. VSH compressors exhibit high volumetric efficiency and may draw very low vacuum levels, which could induce such a problem. The minimum low-pressure safety switch (loss-of-charge safety switch) setting is given in the following table. For systems without pump-down, the LP safety switch must either be a manual lockout device or an automatic switch wired into an electrical lockout circuit. The LP switch tolerance must not allow for vacuum operations of the compressor. LP switch settings for pump-down cycles with automatic reset are also listed in the table below. Lock-out circuit or LP switch or series with other safety devices (HP, ...) must be connected to CDS302 input 27.

Pressure settings

Pressure settings		R410A
Working pressure range high side	bar (g)	13.5 - 44.5
Working pressure range low side	bar (g)	2.3 - 11.6
Maximum high pressure safety switch setting	bar (g)	45
Minimum low pressure safety switch setting *	bar (g)	1.5
Minimum low pressure pump-down switch setting **	bar (g)	2.3

*LP safety switch shall never be bypassed.
** Recommended pump-down switch settings: 1.5 bar below nominal evaporating temperature with minimum of 2.3

Electronic expansion valve

With variable capacity systems, an electronic expansion valve (EXV) is one of the better solutions to handle refrigerant mass flow variations. Ramp-up and ramp-down settings, of both EXV and compressor, must be done with great care.

Ramp-up of the EXV must be shorter than the ramp-up of the compressor, to avoid any low pressure operation on suction side of the compressor. The EXV can also be opened, up to a certain degree, before the start up of the compressor.

Ramp-down of the EXV must be longer than the ramp-down of the compressor, also to avoid low pressure operation (except with pump-down).

EXV should be closed, and remained closed, when the compressor is off, to avoid any liquid refrigerant entering the compressor.

Crankcase heating function

A DC-hold current through the motor windings can be used as an alternative to an external crankcase heater to keep the compressor warm when stopped.

For VSH088 and VSH117 this function is factory preset to “enabled”. Go to parameter 28.3* in the frequency converter for settings (factory presets are done).

For VSH170, this function must not be used and is factory preset to “disabled”. An external crankcase heater is required, and surface sump heater type should be preferred. Refer to accessory list for code numbers.

Essential piping design considerations

The working pressure in systems with R410A is about 60% higher than in systems with R22 or R407C. Consequently, all system components and piping must be designed for this higher pressure level.

Proper piping practices should be employed to ensure adequate oil return, even under minimum load conditions with special consideration given to the size and slope of the tubing coming from the evaporator. Tubing returns from the evaporator should be designed so as not to trap oil and to prevent oil and refrigerant migration back to the compressor during off-cycles.

In systems with R410A, the refrigerant mass flow will be lower compared to R22/R407C systems. To maintain acceptable pressure drops and acceptable minimum gas velocities, the refrigerant piping must be reduced in size compared to R22 / R407C systems. Take care not to create too high pressure drops neither since in R410A systems the negative impact of high pressure drops on the system efficiency is stronger than in R22/R407C systems.

Piping should be designed with adequate three-dimensional flexibility. It should not be in contact with the surrounding structure, unless a proper tubing mount has been installed. This protection proves necessary to avoid excess vibration, which can ultimately result in connection or tube failure due to fatigue or wear from abrasion. Aside from tubing and connection damage, excess vibration may be transmitted to the surrounding structure and generate an unacceptable noise level within that structure as well. For more information on noise and vibration, see "Sound and Vibration Management" section.

CDS302 frequency converter integrates a special feature in the compressor functions in order to improve and secure the oil recovery from the system. Refer to "Oil Return Management" section.

Suction lines

If the evaporator lies above the compressor, as is often the case in split or remote condenser systems, the addition of a pump-down cycle is strongly recommended. If a pump-down cycle were to be omitted, the suction line must have a loop at the evaporator outlet to prevent refrigerant from draining into the compressor during off-cycles.

If the evaporator were situated below the compressor, the suction riser must be trapped so as to prevent liquid refrigerant from collecting at the outlet of the evaporator while the system is idle, which would mislead the expansion valve's sensor (thermal bulb) at start-up.

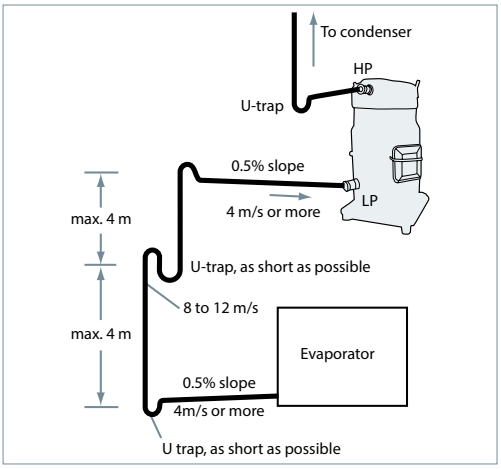

Discharge lines

When the condenser is mounted at a higher position than the compressor, a suitably sized "U"-shaped trap close to the compressor is necessary to prevent oil leaving the compressor from draining back to the discharge side of the compressor during off cycle. The upper loop also helps avoid condensed liquid refrigerant from draining back to the compressor when stopped.

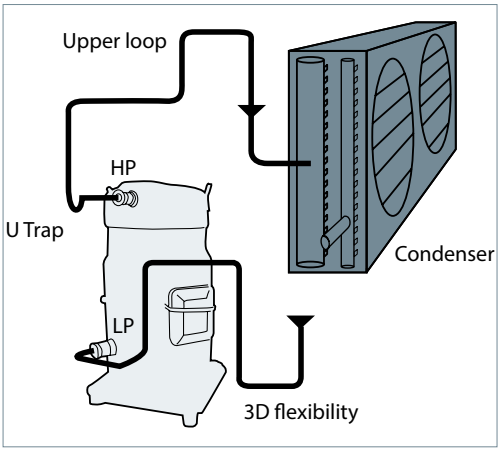

Oil management

Compressors discharge a small percentage of oil that is mixed with the compressed refrigerant. The oil is circulated through the system and the compressor is dependent on the system design to bring it back. The use of inverter compressor technology in systems with long piping, especially for split systems, is among the most challenging configurations for oil return. In order to prevent compressors from breaking down due to oil level issues, Danfoss requires the use of an oil separator in all long piping systems, particularly for split systems.

Inverter compressors used in split systems as well as long piping provide an increased challenge to system oil management due to the reduced velocities at low speed operation. Low oil velocity can cause oil deposits in pipes, heat exchangers and other system components that can cause an insufficient oil level inside the compressor.

It is the responsibility of the systems OEM to ensure the proper oil return to the compressors including the qualification of all possible operating modes, equipment configurations and accessory options (multiple evaporators, reheat coils for example) that could impact oil return to the compressors.

Especially for split systems using inverter compressors, in which every installation is unique and qualification of individual installations is not practical, Danfoss requires that OEMs install an oil separator.

The requirement of an oil separator is also suitable for any other system with complex piping (long line set, U trap…), multiple heat exchangers and elevation changes.

Many oil separator designs exist, the selection, requirements and recommendations of the Oil Separator manufacturer should be followed.

Customers have the opportunity to select Chiyoda (CE marked) since it has been tested successfully by Danfoss. Detailed information hereafter.

Please note that an oil separator is not 100% efficient. A good system design and efficient oil management remain essential.

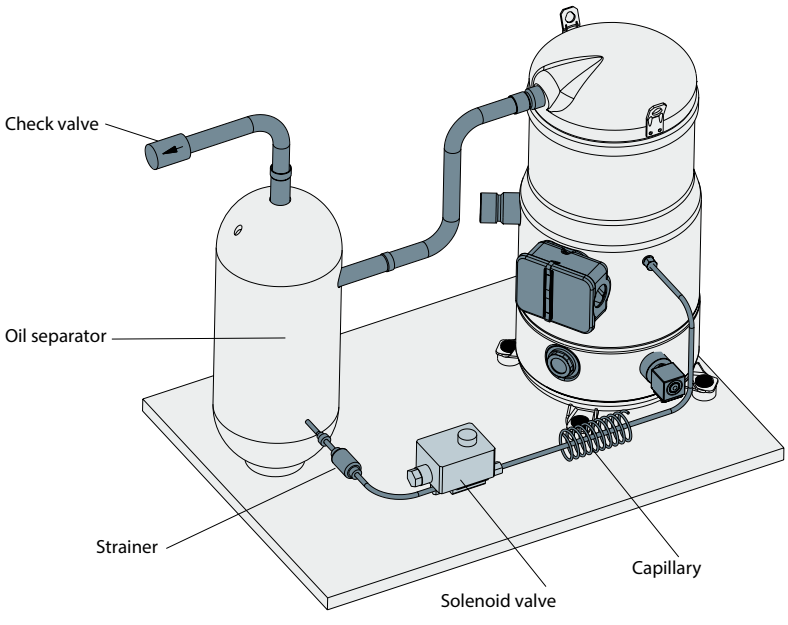

Compressor			VSH088	VSH117	VSH170
"OS separator (CE)"	Brand		Chiyoda		
	Contact information		Email: sales@chiyodaseiki.com Tel: +86(512)62833498 Address: No.1 Sheng gang Rd, Suzhou Industrial Park, Jiang su,PRC, China. Website: http://www.chiyodaseiki.com/		
	Model		OS-165DF088CE	OS-165DF117CE	OS-165DF170CE
	outline		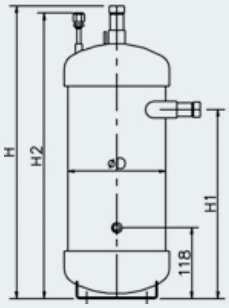		
	Type		centrifugal		
	ΦD: Outter Diameter(mm)		Φ165.2	Φ165.2	Φ165.2
	Volume(L)		7.2	8.3	10.5
	Inlet size(in)		7/8''	7/8''	1''1/8
	outlet size (in)		7/8''	7/8''	1''1/8
	Footprint LxW(mm x mm)		190.5x102		
	H1: Height(mm)		297	355	469
	H2: Height(mm)		457	515	635
	H: Height(mm)		469	527	645
Capillary tube	Inner diameter(mm)		Φ1.6	Φ1.8	Φ1.8
	length(mm)		1400	1530	1380
Strainer	Mesh size		100	100	100
Solenoiid valve "Model: Danfoss (Orifice Φ2.0) (CE)"	Orifice(mm)		Φ2.0		
	code number		032F1201		
	connection(in)		1/4''		
solenoil coil	"24V 50Hz AC"	code number	018F6257		
		specification	1m 3-core cable		
	"220-230V 50/60Hz AC"	code number	018F6282		
		specification	1m 3-core cable		

Customers can of course contact Danfoss application engineers for support regarding recommendations in such systems.

Heat exchangers

To obtain optimum efficiency of the complete refrigerant system, optimized R410A heat exchangers must be used. R410A refrigerant has good heat transfer properties: it is worthwhile designing specific heat exchangers to gain in size and efficiency.

An evaporator with optimized R410A distributor and circuit will give correct superheat at outlet and optimal use of the exchange surface. This is critical for plate evaporators that have generally a shorter circuit and a lower volume than shell & tubes and air cooled coils.

For all evaporator types a special care is required for superheat control leaving the evaporator and oil return.

A sub-cooler circuit in the condenser that creates high sub-cooling will increase efficiency at high condensing pressure. In R410A systems the positive effect of sub-cooling on system efficiency will be significantly larger than in R22/ R407C systems.

Furthermore, for good operation of the expansion device and to maintain good efficiency in the evaporator it is important to have an adequate liquid sub-cooling. Without adequate sub-cooling, flash gas will be formed at the expansion device resulting in a high degree of vapour at the evaporator inlet leading to low efficiency.

Refrigerant charge limits

VSH compressors can tolerate liquid refrigerant up to a certain extend without major problems. However, excessive liquid refrigerant in the compressor is always unfavourable for service life. Besides, the installation cooling capacity may be reduced because of the evaporation taking place in the compressor and/or the suction line instead of the evaporator. System design must be such that the amount of liquid refrigerant in the compressor is limited. In this respect, follow the guidelines given in the section: “Essential piping design recommendations” in priority.

If the refrigerant charge exceeds the values in below table, a suction line accumulator is strongly recommended.

Model	Refrigerant charge limit (kg)
VSH088	5.9
VSH117	7.9
VSH170	13.5

More detailed information can be found in the paragraphs hereafter. Please contact Danfoss technical support for any deviation from these guidelines.

Liquid refrigerant can find its way into the compressor by means of off-cycle migration or liquid floodback during operation.

Off-cycle migration

Off-cycle refrigerant migration is likely to occur when the compressor is located at the coldest part of the installation, when the system uses a bleed-type expansion device, or if liquid is allowed to migrate from the evaporator into the compressor sump by gravity. If too much liquid refrigerant accumulates in the sump it will saturate the oil and lead to a flooded start: when the compressor starts running again, the refrigerant evaporates abruptly under the sudden decrease of the bottom shell pressure, causing the oil to foam. In extreme situations, this might result in liquid slugging (liquid entering the scroll elements), which must be avoided as it causes irreversible damage to the compressor.

The presence of liquid in the crankcase can be easily detected by checking the sump level through the oil sight glass. Foam in the oil sump indicates a flooded start.

VSH scroll compressors can tolerate occasional flooded starts as long as the total system charge does not exceed the maximum compressor refrigerant charge.

Off-cycle migration can be prevented by implementing a crankcase heating or adding a pump-down cycle to the operation cycle and a liquid line solenoid valve.

	Crankcase heater / sump heater: When the compressor is idle, the oil temperature in the sump of the compressor must be maintained at no lower than 10 K above the saturation temperature of the refrigerant on the low-pressure side. This requirement ensures that the liquid refrigerant is not accumulating in the sump. A crankcase heater is only effective if capable of sustaining this level of temperature difference. Tests must be conducted to ensure that the	appropriate oil temperature is maintained under all ambient conditions (temperature and wind). Provide separate electrical supply for the heaters so that they remain energized even when the machine is out of service (eg. seasonal shut-down). Refer to section "Crankcase heating function" for details and settings of crankcase heating function integrated in the drive.
	Liquid line solenoid valve (LLSV)**:** A LLSV may be used to isolate the liquid charge on the condenser side, thereby preventing against charge transfer or excessive migration to the compressor during off-cycles. When installed,	some EXV can also ensure this function. The quantity of refrigerant on the low-pressure side of the system can be further reduced by using a pump-down cycle in association with the LLSV.
	Pump-down cycle: A pump-down cycle represents one of the most effective ways to protect against the off-cycle migration of liquid refrigerant. Once the system has reached its set point and is about to shut off, the LLSV on the condenser outlet closes. The compressor then pumps the majority of the refrigerant charge into the condenser and receiver before the system	stops on the low pressure pump-down switch. This step reduces the amount of charge on the low side in order to prevent off-cycle migration. The recommended low-pressure pump-down switch setting is 1.5 bar below the nominal evaporating pressure. It shall not be set lower than 2.3 bar.
	Liquid receiver: Refrigerant charge optimisation varies with compressor speed. To avoid flash gas at low speed, a receiver may be necessary.	Receiver dimensioning requires special attention. The receiver shall be large enough to contain part of the system refrigerant charge, but shall not be too large, to avoid refrigerant overcharging during maintenance operations.
Liquid floodback during operation	Liquid floodback occurs when liquid refrigerant returns to the compressor when it is running. During normal operation, refrigerant leaves the evaporator and enters the compressor as a superheated vapour. The suction gas can still contain liquid refrigerant for example with a wrong dimensioning, a wrong setting or malfunction of the expansion device or in case of evaporator fan failure or blocked air filters. A continuous liquid floodback will cause oil dilution and, in extreme situations, lead to liquid slugging. VSH scroll compressors can tolerate occasional liquid floodback. However system design must be such that repeated and excessive floodback is not possible.	During operations, liquid floodback may be detected by measuring either the oil sump temperature or the discharge gas temperature. If at any time during operations, the oil sump temperature drops to within 10K or less above the saturated suction temperature, or should the discharge gas temperature be less than 35K above the saturated discharge temperature, this indicates liquid floodback. Repetitive liquid floodback testing must be carried out under TXV threshold operating conditions: a high pressure ratio and minimum evaporator load, along with the measurement of suction superheat, oil sump temperature and discharge gas temperature.

Application Guidelines	Specific application recommendations	
Low ambient compressor operations		
Low ambient operations and minimum pressure differential at steady running conditions	The VSH compressor requires a minimum pressure differential of 6 to 7 bar between the suction and discharge pressures to force the orbiting scroll-down against the oil film on the thrust bearing. Anything less than this differential and the orbiting scroll can lift up, causing a metal-to-metal contact. It is therefore necessary to maintain sufficient discharge pressure in order to ensure this pressure	differential. Care should be taken during low ambient operations when heat removal from air-cooled condensers is greatest and head pressure control may be required for low ambient temperature applications. Operation under low pressure differential may be observed by a significant increase in the sound power level generated by the compressor.
Low ambient start-up	Under cold ambient conditions, upon start-up the pressure in the condenser may be so low that a sufficient pressure differential across the expansion device cannot be developed to properly feed the evaporator. As a result, the compressor may go into abnormal low suction pressure, which can lead to compressor failure. Under no circumstances should the compressor be allowed to operate under vacuum. The low-pressure control must be set in accordance with	the table section "Pressure settings" in order to prevent this from happening. Low pressure differentials can also cause the expansion device to "hunt" erratically, which might cause surging conditions within the evaporator, with liquid spillover into the compressor. This effect is most pronounced during low load conditions, which frequently occur during low ambient conditions.
Head pressure control under low ambient conditions	Several possible solutions are available to prevent the compressor from drawing down to a vacuum upon start-up under low ambient conditions. In air-cooled machines, cycling the fans with a head pressure controller will ensure that the fans remain off until the condensing pressure has reached a satisfactory level. In water-cooled units, the same can be performed using a water regulator valve that is also operated by head pressure, thereby ensuring that the water valve does not open until the condensing pressure reaches a satisfactory level. Note: The minimum condensing pressure must be set at the minimum saturated condensing temperature shown in the application envelopes.	Under very low ambient conditions, in which testing has revealed that the above procedures might not ensure satisfactory condensing and suction pressures, the use of a liquid receiver with condenser and receiver pressure regulators would be possible. Condensing pressure control is also strongly recommended to improve any system efficiency. The most accurate value is to control the condensing temperature at 12 K above the ambient temperature for air cooled condensers. For further information, please contact Danfoss Technical support.
Crankcase heaters	A crankcase heating will minimize refrigerant migration caused by the large temperature gradient between the compressor and the remainder of the system.	Refer to crankcase heating section "Crankcase heating function" for details and settings.
Low load operations	It is recommended that the unit be tested and monitored at minimum load and, if possible, during low ambient conditions as well. During conditions of low load on the system, the following considerations should be taken into account to ensure proper system operating characteristics.	• The superheat setting of the expansion device should be sufficient to ensure proper superheat levels during low loading periods. 5 to 6 K stable superheat is required. In addition, the refrigerant charge should be sufficient to ensure proper sub-cooling within the condenser so as to avoid the risk of flashing in the liquid line before the expansion device. The expansion device should be sized to ensure proper control of the refrigerant flow into the evaporator.

An oversized valve may result in erratic control. This can lead to liquid refrigerant entering the compressor if the expansion valve does not provide stable refrigerant super-heat control under varying loads.

- Condenser fans should be cycled in such a way that the minimum pressure differential is maintained between the suction and discharge pressures. Inverter fans can also be used to control the amount of heat to be removed from the condenser.
- The compressors should be run for a minimum period in order to ensure that the oil has sufficient time to properly return to the compressor sump and that the motor has sufficient time to cool under conditions of lowest refrigerant mass flows.

Refer to section "Oil return management function".

Brazed plate heat exchangers

A brazed plate heat exchanger needs very little internal volume to satisfy the set of heat transfer requirements. Consequently, the heat exchanger offers very little internal volume for the compressor to draw vapour from on the suction side. The compressor can then quickly enter into a vacuum condition. It is therefore important that the expansion device be sized correctly and that a sufficient pressure differential across the expansion device be available to ensure adequate refrigerant feed into the evaporator. This aspect is of special concern when operating the unit under low ambient and load conditions. For further information on these conditions, please refer to the previous sections.

Due to the small volume of the brazed plate heat exchanger, no pump-down cycle is normally required. The suction line running from the heat exchanger to the compressor must be trapped to avoid refrigerant migration to the compressor.

When using a brazed plate condenser heat exchanger, a sufficient free volume for the discharge gas to accumulate is required in order to avoid excess pressure build-up. At least 1 meter of discharge line is necessary to generate this volume. To help reduce the gas volume immediately after start-up even further, the supply of cooling water to the heat exchanger may be opened before the compressor starts up so as to remove superheat and condense the incoming discharge gas more quickly.

Because of the large compressor capacity variation and VSH capability to run at low condensing temperature an EXV (electronic expansion valve) is mandatory.

Reversible heat pump systems

Transients are likely to occur in reversible heat pump systems, i.e. a changeover cycle from cooling to heating, defrost or low-load short cycles. These transient modes of operation may lead to liquid refrigerant carry-over (or flood-back) or excessively wet refrigerant return conditions. As such, reversible cycle applications require specific precautions for ensuring a long compressor life and satisfactory operating characteristics. Regardless of the refrigerant charge in the system, specific tests for repetitive flood-back are required to confirm whether or not a suction accumulator needs to be installed. The following considerations cover the most important issues when dealing with common applications. Each application design however should be thoroughly tested to ensure acceptable operating characteristics.

Discharge temperature monitoring

Heat pumps frequently utilize high condensing temperatures in order to achieve a sufficient temperature rise in the medium being heated. At the same time, they often require low evaporating pressures to obtain sufficient temperature differentials between the evaporator and the outside temperature. This situation may result in high discharge temperature; as such, it is mandatory that a discharge gas safety control is carried to protect the compressor from excessive temperatures. Operating the compressor at too high discharge temperatures can result in mechanical damage to the compressor as well as thermal degradation of the compressor lubricating oil and a lack of sufficient lubrication.

Refer to section "Discharge gas temperature protection" function for frequency converter settings and accessories availability.

Application Guidelines	Specific application recommendations	
Discharge line and reversing valve	The VSH scroll compressor is a high volumetric machine and, as such, can rapidly build up pressure in the discharge line if gas in the line becomes obstructed even for a very short period of time which situation may occur with slow-acting, reversing valves in heat pumps. Discharge pressures exceeding the operating envelope may result in nuisance high-pressure switch cutouts and can generate excessive load on bearings and motor. To prevent such occurrences, it is important that a 1-meter minimum discharge line length be allowed between the compressor discharge port and the reversing valve or any other restriction. This gives sufficient free volume for the discharge gas to collect and to reduce the	pressure peak during the time it takes for the valve to change position. At the same time, it is important that the selection and sizing of the reversing or 4-way valve ensure that the valve switches quickly enough to prevent against too high discharge pressure and nuisance high-pressure cutouts. Check with the valve manufacturer for optimal sizing and recommended mounting positions. It is strongly recommended to reduce the compressor speed to 30Hz before the 4-way valve is moved from a position to another. Refer also to high and low pressure protection.
Defrost and reverse cycle	After the 4-way valve is moved to defrost position, and in order to shorten the defrost period, the compressor speed can be maintained at 70Hz during the defrost period.	When the compressor is started again, after defrost, it will run at 30Hz for a 10 seconds period. After this period it is recommended to maintain the speed at 50Hz for 10 to 15 seconds. Thus to avoid excessive liquid refrigerant to come back to the compressor sump.
Suction line accumulator	The use of a suction line accumulator is strongly recommended in reversible-cycle applications. This because of the possibility of a substantial quantity of liquid refrigerant remaining in the evaporator, which acts as a condenser during the heating cycle. This liquid refrigerant can then return to the compressor, either flooding the sump with refrigerant or as a dynamic liquid slug when	the cycle switches back to a defrost cycle or to normal cooling operations. Sustained and repeated liquid slugging and floodback can seriously impair the oil's ability to lubricate the compressor bearings. This situation can be observed in wet climates where it is necessary to frequently defrost the outdoor coil in an air source heat pump. In such cases a suction accumulator becomes mandatory.
Water utilizing systems	Apart from residual moisture in the system after commissioning, water could also enter the refrigeration circuit during operation. Water in the system shall always be avoided. Not only because it can shortly lead to electrical failure, sludge in sump and corrosion but in particular because it can cause serious safety risks. Common causes for water leaks are corrosion and freezing.	Corrosion: Materials in the system shall be compliant with water and protected against corrosion. Freezing: When water freezes into ice its volume expands which can damage heat exchanger walls and cause leaks. During off periods water inside heat exchangers could start freezing when ambient temperature is lower than 0°C. During on periods ice banking could occur when the circuit is running continuously at too low load. Both situations should be avoided by connecting a pressure and thermostat switch in the safety line.

Running sound level

For VSH170, an inferior hood is delivered with the SSH (Surface Sump Heater) to improve its heating efficiency. Noise level for VSH170 given below includes this inferior hood attenuation.
For VSH088 and VSH117, inferior hood are not available.

Model	Rotation speed (rpm)	Noise Level (dBA)
VSH088	1800	67
	3600	74
	5400	84
VSH117	1800	68
	3600	77
	5400	85
VSH170	1800	68 (*)
	3600	79 (*)
	5400	88 (*)

Sound power at ARI A/C conditions measured in free space. (*) Level given with Surface Sump Heater and inferior hood installed at the bottom of the compressor.

Sound generation in a refrigeration or air conditioning system

Typical sound and vibration in refrigeration and air conditioning systems encountered by design and service engineers may be broken down into the following three source categories.
Sound radiation: this generally takes an airborne path.
Mechanical vibrations: these generally extend along the parts of the unit and structure.
Gas pulsation: this tends to travel through the cooling medium, i.e. the refrigerant.
The following sections focus on the causes and methods of mitigation for each of the above sources.

Compressor sound radiation

For sound radiating from the compressor, the emission path is airborne and the sound waves are travelling directly from the machine in all directions.

The VSH scroll compressor is designed to be quiet and the frequency of the sound generated is pushed into the higher ranges, which not only are easier to reduce but also do not generate the penetrating power of lower-frequency sound.

Use of sound-insulation materials on the inside of unit panels is an effective means of substantially reducing the sound being transmitted to the outside. Ensure that no components capable of transmitting sound/vibration within the unit come into direct contact with any non insulated parts on the walls of the unit.

Because of the VSH unique design of a full-suction gas-cooled motor, compressor body insulation across its entire operating range is possible. Acoustic hoods are available from Danfoss as accessories. These hoods are quick and easy to install and do not increase the overall size of the compressors to a great extend.

Mechanical vibrations

Vibration isolation constitutes the primary method for controlling structural vibration. VSH scroll compressors are designed to produce minimal vibration during operations. The use of rubber isolators on the compressor base plate or on the frame of a manifolded unit is very effective in reducing vibration being transmitted from the compressor(s) to the unit. Once the supplied rubber grommets have been properly mounted, vibrations transmitted from the compressor base plate to the unit are held to a strict minimum. In addition, it is extremely important that the frame supporting the mounted compressor be of sufficient mass and stiffness to help dampen any residual vibration potentially transmitted to the frame. For further information on mounting requirements, please refer to the section on mounting assembly.

Speed by-pass

If vibrations occurs at some typical frequencies of the VSH inverter compressor system, design must be checked: frame, piping, pipes using cushioned clamps. But if some frequencies remain showing unacceptable vibration level, speed by-pass is adjustable in the frequency converter, in order to avoid some frequency ranges.

Four by-pass ranges are adjustable, and settings can be done in parameters 4.6 *.

Gas pulsation

The VSH scroll compressor has been designed and tested to ensure that gas pulsation has been optimized for the most commonly encountered air conditioning pressure ratios. On heat pump installations and other installations where the pressure ratio lies beyond the typical range, testing should be conducted under all expected conditions and operating configurations to ensure that minimum gas pulsation is present. If an unacceptable level is identified, a discharge muffler with the appropriate resonant volume and mass should be installed. This information can be obtained from the component manufacturer.

Each compressor is shipped with printed instructions for installation. These instructions can also be downloaded from: http://instructions.cc.danfoss. com

Compressor handling

Each VSH scroll compressor is equipped with two lift rings on the top shell. Always use both these rings when lifting the compressor. Use lifting equipment rated and certified for the weight of the compressor. A spreader bar rated for the weight of the compressor is highly recommended to ensure a better load distribution. The use of lifting hooks closed with a clasp certified to lift the weight of the compressor is also highly recommended. Always respect the appropriate rules concerning lifting objects of the type and weight of these compressors. Maintain the compressor in an upright position during all handling operations.

Never use only one lifting lug to lift the compressor. The compressor is too heavy for the single lug to handle, and the risk is that the lug could separate from the compressor with extensive damage and possible personal injury as a result.

When the compressor is mounted as part of an installation, never use the lift rings on the compressor to lift the installation. The risk is that the lugs could separate from the compressor or that the compressor could separate from the base frame with extensive damage and possible personal injury as a result.

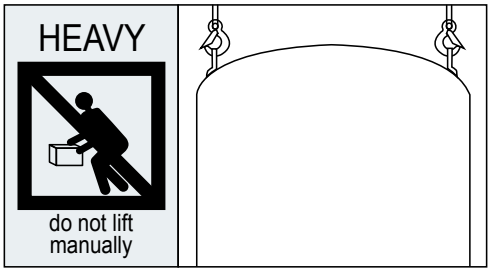

Never apply force to the terminal box with the intention of moving the compressor, as the force placed upon the terminal box can cause extensive damage to both the box and the components contained inside.

Mounting

VSH compressors come delivered with four rubber mounting grommets and metal sleeve liners that serve to isolate the compressor from the base frame. These grommets must always be used to mount the compressor in a single application. The grommets must be compressed until contact between the flat washer and the steel mounting sleeve is established. The grommets attenuate to a great extent the transmission of compressor vibrations to the base frame.

The required bolt size for the VSH 088 & 117 compressors is HM8-40. This bolt must be tightened to a torque of 15 Nm.

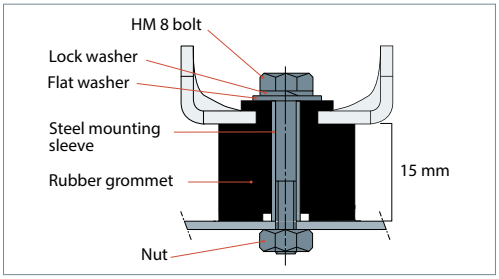

The required bolt size for VSH170 compressors is HM8-55 and must be tightened to a torque of 21Nm.

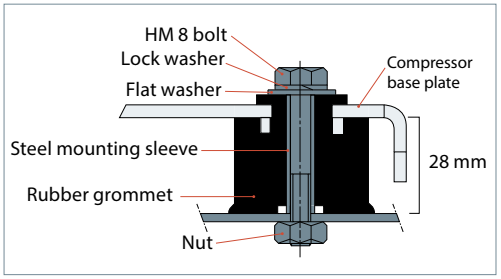

Removing connections shipping plugs

Before the suction and discharge plugs are removed, the nitrogen holding charge must be released via the suction schrader valve to avoid an oil mist blowout. Remove the suction plug first and the discharge plug afterwards. The plugs shall be removed only just before connecting the compressor to the installation in order to avoid moisture from entering the compressor. When the plugs are removed, it is essential to keep the compressor in an upright position so as to avoid oil spillage.

System cleanliness

The refrigerant compression system, regardless of the type of compressor used, will only provide high efficiency and good reliability, along with a long operating life, if the system contains solely the refrigerant and oil it was designed for. Any other substances within the system will not improve performance and, in most cases, will be highly detrimental to system operations.

The presence of non-condensable substances and system contaminants such as metal shavings, solder and flux, have a negative impact on compressor service life. Many of these contaminants are small enough to pass through a mesh screen and can cause considerable damage within a bearing assembly.

The use of highly hygroscopic polyolester oil in R410A compressors requires that the oil be exposed to the atmosphere as little as possible. System contamination is one of main factors affecting equipment reliability and compressor service life. It is important therefore to take system cleanliness into account when assembling a refrigeration system.
During the manufacturing process, circuit

contamination may be caused by:
• Brazing and welding oxides,
• Filings and particles from the removal of burrs in pipe-work,
• Brazing flux,
• Moisture and air.
Consequently, when building equipment and assemblies, the precautions listed in the following paragraphs must be taken.

Tubing

Only use clean and dehydrated refrigeration-grade copper tubing. Tube-cutting must be carried out so as not to deform the tubing roundness and to ensure that no foreign debris remains within the tubing. Only refrigerant grade fittings should be used and these must be of

both a design and size to allow for a minimum pressure drop through the completed assembly. Follow the brazing instructions bellow. Never drill holes into parts of the pipe-work where filings and particles can not be removed.

Filter driers

For new installations with VSH compressors with polyolester oil, Danfoss recommends using the Danfoss DML 100% molecular sieve, solid core filter drier. Molecular sieve filter driers with loose beads from third party suppliers shall be avoided. For servicing of existing installations where acid formation is present the Danfoss DCL solid core filter driers containing activated alumina are recommended.

The drier is to be oversized rather than undersized. When selecting a drier, always take into account its capacity (water content capacity), the system refrigeration capacity and the system refrigerant charge.

Brazing and soldering

Copper to copper connections

When brazing copper-to-copper connections, the use of copper/phosphorus brazing alloy containing 5% silver or more with a melting

temperature of below 800°C is recommended. No flux is required during brazing.

Dissimilar metals connections

When manipulating dissimilar metals such as copper and brass or steel, the use of silver solder and anti-oxidant flux is necessary.

Compressor connection

When brazing the compressor fittings, do not overheat the compressor shell, which could severely damage certain internal components due to excessive heating. Use of a heat shield and/or a heat-absorbent compound is highly recommended. Due to the relatively sizable tubing and fitting diameters a double-tipped torch using acetylene is recommended for brazing operation on VSH compressors.

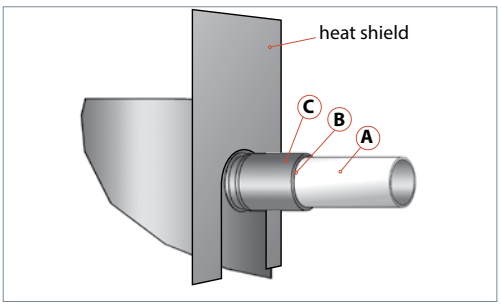

For brazing the suction and discharge connections, the following procedure is advised:

- Make sure that no electrical wiring is connected to the compressor.
- Protect the terminal box and compressor painted surfaces from torch heat damage (see diagram).
- Remove the Teflon gaskets when brazing rotolock connectors with solder sleeves.
- Use only clean refrigeration-grade copper tubing and clean all connections.
- Use brazing material with a minimum of 5% silver content.
- Purge nitrogen or CO_2 through the compressor in order to prevent against oxidation and flammable conditions. The compressor should not be exposed to the open air for extended periods.
- Use of a double-tipped torch is recommended.
- Apply heat evenly to area A until the brazing temperature is reached. Move the torch to area B and apply heat evenly until the brazing temperature has been reached there as well, and then begin adding the brazing material. Move the torch evenly around the joint, in applying only enough brazing material to flow the full circumference of the joint.
- Move the torch to area C only long enough to draw the brazing material into the joint, but not into the compressor.
- Remove all remaining flux once the joint has been soldered with a wire brush or a wet cloth. Remaining flux would cause corrosion of the tubing.

Ensure that no flux is allowed to enter into the tubing or compressor. Flux is acidic and can cause substantial damage to the internal parts of the system and compressor.

The polyolester oil used in VSH compressors is highly hygroscopic and will rapidly absorb moisture from the air. The compressor must therefore not be left open to the atmosphere for a long period of time. The compressor fitting plugs shall be removed just before brazing the compressor. The compressor should always be the last component brazed into the system

Before eventual unbrazing the compressor or any system component, the refrigerant charge must be removed from both the high- and low-pressure sides. Failure to do so may result in serious personal injury. Pressure gauges must be used to ensure all pressures are at atmospheric level.

For more detailed information on the appropriate materials required for brazing or soldering, please contact the product manufacturer or distributor. For specific applications not covered herein, please contact Danfoss for further information.

System pressure test

Always use an inert gas such as nitrogen for pressure testing. Never use other gasses such as oxygen, dry air or acetylene as these may form an inflammable mixture. Do not exceed the following pressures:

Maximum compressor test pressure (low side)	33.3 bar(g) for VSH088 & 117 30.2 bar(g) for VSH170
Maximum compressor test pressure (high side)	44.5 bar (g)
Maximum pressure difference between high and low side of the compressor	37 bar

Pressurize the system on HP side first then LP side to prevent rotation of the scroll. Never let the pressure on LP side exceed the pressure on HP side with more than 5 bar.

Leak detection

Leak detection must be carried out using a mixture of nitrogen and refrigerant or nitrogen and helium, as indicated in the table below. Never use other gasses such as oxygen, dry air or acetylene as these may form an inflammable mixture.

Pressurize the system on HP side first then LP side.

Leak detection with refrigerant	Leak detection with a mass spectrometer
Nitrogen & R410A	Nitrogen & Helium

Vacuum pump down and moisture removal

Moisture obstructs the proper functioning of both the compressor and the refrigeration system. Air and moisture reduce service life and increase condensation pressure, which causes abnormally high discharge temperatures that are then capable of degrading the lubricating properties of the oil. The risk of acid formation is also increased by air and moisture, and this condition can also lead to copper plating. All these phenomena may cause both mechanical and electrical compressor failures. The typical method for avoiding such problems is a vacuum pump-down executed with a vacuum pump, thus creating a minimum vacuum of 500 microns (0.67 mbar). Please refer to News bulletin "Vacuum pump down and dehydration procedure".

Refrigerant charging

Air-conditioning installations exist in a multiple of designs and with many possible system components installed. The system design and the presence or absence of certain components, not only influence the system behaviour during operations; they can also be of a great influence during the refrigerant charging procedure. Improper charging procedure could cause compressor damage in several ways excessive LP/HP pressure differences, liquid slugging or vacuum operation. The below charge procedure is strongly recommended to reduce these risks.

- Prior to refrigerant charging a system vacuum and moisture removal procedure must have been carried out. (See previous paragraph)
- Always use a scale to measure actual refrigerant R410A charge quantity. Record system charge when completed.
- The refrigerant must be charged in the liquid phase for R410A.
- The refrigerant must be charged at the liquid side of the refrigeration circuit. The best charging location is the service shut-off valve at the liquid receiver outlet. When there is no liquid receiver, the charge must be done in the liquid line. When a liquid line solenoid valve (LLSV) is present, it must be closed (de-energised) and the charge location must be before the LLSV.
- If the system is equipped with an electronic expansion valve (EXV), this valve must be fully closed (opening degree: 0%).
- Loosely connect the service manifold HP hose to a gauge fitting on the liquid side as described above. Connect the LP hose to a fitting on the suction line as far away as possible from the compressor.
- The compressor must be off and prevented from starting inadvertently/automatically.
- If the system is equipped with a liquid line service shut-off valve, put this valve in an intermediate position (between front seat and back seat).
- Start the charging process:
  > Using a charging machine the refrigerant charge specified can be achieved in one step
  > If using a refrigerant cylinder, it can be warmed up carefully to avoid generating over pressure, but increase enough the tank pressure to allow the complete transfer.
  > If neither EXV nor LLSV is present, take extra care not filling up the compressor sump with liquid refrigerant via the evaporator and suction line.
- "Crack" open the LP service gauge manifold valve. The pressure in the system LP side increase slowly until LP pressure equals HP pressure. The pressure increase at LP side shall not be faster than 0.25 bar/second. A brutal pressure increase can cause internal compressor damage because of an excessive LP/HP compressor side difference.
- Compressor can be started. Make sure the compressor is not going to run under vacuum. If this situation appears then manually stop and restart the compressor. When a EXV is used it can be prepositioned at given opening degree to avoid running at low evaporating during EXV self adjustment. Never by-pass the LP pressure switch.
- Allow the system to operate until the design operating temperature has been achieved before making final refrigerant charge adjustment.
- The additional refrigerant charge must be done on the LP side by slowly throttling through the Schrader fitting.
- Continue to monitor the system closely throughout the entire, initial pull-down period. Observe all operating system pressures and temperatures and make any other necessary control adjustments. During this time, the compressor oil level should be maintained within the sight glass and suction superheat measured at the compressor suction to ensure adequate motor cooling and no liquid refrigerant is being returned directly to the compressor.

Commissioning

The system must be monitored after initial start-up for a minimum of 60 minutes to ensure proper operating characteristics such as:

- Proper metering device operation and desired superheat readings
- Suction and discharge pressure are within acceptable levels
- Correct oil level in compressor sump indicating proper oil return
- Low foaming in sight glass and compressor sump temperature 10K above saturation temperature to show that there is no refrigerant migration taking place
- Acceptable cycling rate of compressors, including duration of run times

A short cycling protection is provided in the CDS302 frequency converter. It is factory preset "enabled" with the following parameters in:

28.01 interval between 2 starts: 300 secondes
28.02 minimum run time: 12 seconds

This minimum run time is set to guaranty long enough running time at start up in order to create enough refrigerant flow velocity in the system to recover the oil to the compressor sump.

- Current draw of compressor within acceptable values (current can be displayed on the LCP)
- No abnormal vibrations and noise.

Optional relay card

In some situation, an optional relay card is needed and installed on the frequency converter. This will give access to extra parameters that will have to be set according to the application needs. These settings can be done directly to the frequency converter or downloaded to it (via a LCP for example).

Afterwards, if the relay card is removed and the frequency converter is powered-up without the relay card in place, the settings will be loosed and reset to factory settings. Therefore, during commissioning or card replacement, it is important to not power-up the frequency converter while the relay card is not in place.

Oil level checking and top-up

In installation with good oil return and line runs up to 20 metres no additional oil is required. If installation lines exceed 20 m, additional oil may be needed. 2% of the total system refrigerant charge (in weight) can be used to roughly define the required oil top-up quantity but in any case the oil adjustment has to be based on the oil level in the compressor sight glass. This procedure must be conducted with the system running at high load (compressor at full speed).

When the compressor is running under stabilised conditions the oil level must be visible in the sight glass.

Mandatory check is made at low load and stabilised conditions, compressor at minimum speed, for a minimum duration of 1 hour. The oil level must be always visible at the compressor sight glass. If any deviation is observed, this means that some oil is trapped in the system, heat exchangers and/or pipes.

The CDS302 frequency converter integrates an oil recovery management algorithm which needs to be adjusted in regards to the system design. Oil return management function forces the compressor to rotate at 4200rpm (70 Hz) for an adjustable given period of time in order to build a good refrigerant gas velocity in the system to allow the oil recovery to the compressor sump. This oil management function is factory preset with the following parameters:

- 28-10 Oil return management : enabled
- 28-11 Low speed running time : 60 minutes. This is the duration during which the compressor rotation speed is below 3000rpm (50 Hz)
- 28-12 Fixed boost interval : 24 hours
- 28-13 Boost duration: 30 seconds

If the oil level decreases down to the bottom side of the sight glass, parameter 28-11 must be adjusted to start the boost cycle. During this boost cycle the oil level in the sight has to be monitored in order to adjust the boost duration on parameter 28-13 to a value that allows the oil level to be recovered at ½ of the sight glass.

Oil level check must always be done compressor running. When the compressor is off, the level in the sight glass is influenced by the presence of refrigerant in the oil.

Top-up the oil with compressor running. Use the Schrader connector or any other accessible connector on the compressor suction line and a suitable pump. See dedicated bulletin "Lubricants filling in instructions for Danfoss Commercial Compressors".

Kit ordering and shipping

The tables on the following pages give code numbers for ordering purposes for the VSH compressor and CDS302 frequency converter kit packed and shipped separately.

Packaging

Compressor single pack

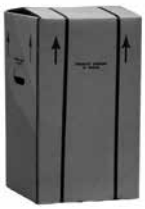

Compressor model	Height (mm)	Width (mm)	Depth (mm)	Weight (kg)
VSH088	578	455	355	59
VSH117	578	455	355	65
VSH170	765	515	450	106

Frequency converter single pack

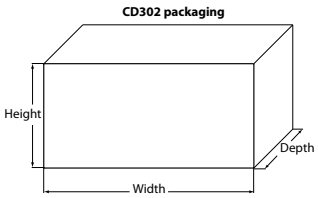

Drive supply voltage	Drive power (kW)	IP20				IP55			
		Height (mm)	Width (mm)	Depth (mm)	Weight (kg)	Height (mm)	Width (mm)	Depth (mm)	Weight (kg)
T2	15	346	810	320	24	430	805	405	46
	18 - 22	437	805	405	36	437	805	405	46
T4	15	349	500	330	13	346	810	320	24
	18 - 22	346	810	320	24	346	810	320	28
T6	15	349	500	330	13	346	810	320	24
	18 – 22	346	810	320	24	346	810	320	28

VSH voltage code J - 200-240 Volt

Compressor		Frequency converter					
Model	Code n° for ordering	Model & power	LCP	IP class	RFI class	Coating	Code n° for ordering
VSH088-J	120G0004	CDS302 15.0kW	No	IP20	H2	No	131H9124
						Yes	131H9125
			Yes	IP20	H2	No	131H9132
				IP55	H2	Yes	131H9137
VSH117-J	120G0005	CDS302 18.5kW	No	IP20	H3	No	131H9138
					H2	No	131H9140
						Yes	131H9141
			Yes	IP20	H3	No	131F0395
					H2	No	131H9147
				IP55	H2	Yes	131H9152
VSH170-J	120G0006	CDS302 22.0kW	No	IP20	H2	No	131H9155
						Yes	131H9156
			Yes	IP20	H2	No	131H9162

VSH voltage code G - 380-480 Volt

Compressor		Frequency converter					
Model	Code n° for ordering	Model & power	LCP	IP class	RFI class	Coating	Code n° for ordering
VSH088-G	120G0001	CDS302 15.0kW	No	IP20	H3	No	131H4380
					H2	No	131H9078
						Yes	131H9080
				IP55	H2	Yes	131H9084
			Yes	IP20	H3	No	131B8789
						Yes	131H9085
					H2	No	131H9086
						Yes	131H9087
				IP55	H3	No	131H9088
					H2	Yes	131H9091
VSH117-G	120G0002	CDS302 18.5kW	No	IP20	H3	No	131H4381
					H2	No	131H9093
						Yes	131H9094
				IP55	H2	Yes	131H9097
			Yes	IP20	H3	No	131F5247
					H2	No	131H9100
				IP55	H2	Yes	131H9106
VSH170-G	120G0003	CDS302 22.0 kW	No	IP20	H3	No	131H4382
						Yes	131H9107
					H2	No	131H9108
						Yes	131H9109
				IP55	H3	Yes	131H9111
					H2	Yes	131H9113
			Yes	IP20	H2	No	131H9116
				IP55	H3	Yes	131H9119
					H2	No	131H9120
						Yes	131H9121

VSH voltage code H - 525-600 Volt

Compressor		Frequency converter					
Model	Code n° for ordering	Model & power	LCP	IP class	RFI class	Coating	Code n° for ordering
VSH088-H	120G0007	CDS302 15.0kW	No	IP20	HX	No	131N3583
VSH117-H	120G0008	CDS302 18.5kW	Yes	IP20	HX	No	131N6989
VSH170-H	120G0009	CDS302 22.0 kW	Yes	IP20	HX	No	131N6998

Valves, adapters, connectors & gaskets for use on suction and discharge connections

Solder sleeve adapter sets

Type	Code n°	Description	Application	Packaging	Pack size
	120Z0125	Solder sleeve adapter set (1"3/4 Rotolock, 1"1/8 ODF), (1"1/4 Rotolock, 7/8" ODF)	VSH088	Multipack	8
	120Z0405	Solder sleeve adapter set (1"3/4 rotolock, 1"3/8 ODF), (1"1/4 rotolock, 7/8" ODF)	VSH117	Multipack	8
	7765028	Solder sleeve adapter set, (2"1/4 Rotolock, 1"5/8 ODF), (1"3/4 Rotolock, 1"1/8 ODF)	VSH170	Multipack	6

Rotolock adapter

Type	Code n°	Description	Application	Packaging	Pack size
	120Z0367	Rotolock adapter (1"1/4 Rotolock, 7/8" ODF)	VSH 088-117 (Discharge side)	Multipack	10
	120Z0364	Rotolock adapter (1"3/4 Rotolock, 1"1/8 ODF)	VSH 088 (Suction side) VSH 170 (Discharge side)	Multipack	10
	120Z0431	Rotolock adapter (1"3/4 Rotolock, 1"3/8 ODF)	VSH 117 (Suction side)	Multipack	10
	120Z0432	Rotolock adapter (2"1/4 Rotolock, 1"5/8 ODF)	VSH 170 (Suction side)	Multipack	10

Gaskets and gasket set

Type	Code n°	Description	Application	Packaging	Pack size
G07	8156132	Gasket, 1"3/4	Models with 1"3/4 rotolock connection	Multipack	10
G07	7956003	Gasket, 1"3/4	Models with 1"3/4 rotolock connection	Industry pack	50
G08	8156133	Gasket, 2"1/4	Models with 2"1/4 rotolock connection	Multipack	10
G08	7956004	Gasket, 2"1/4	Models with 2"1/4 rotolock connection	Industry pack	50
	8156013	Gasket set, 1"1/4, 1"3/4, 2"1/4, OSG gaskets black & white	All rotolock models	Multipack	10

Solder sleeves

Type	Code n°	Description	Application	Packaging	Pack size
P02	8153004	Solder sleeve, P02 (1"3/4 Rotolock, 1"1/8 ODF)	Models with 1"3/4 rotolock connection	Multipack	10
P02	7953005	Solder sleeve, P02 (1"3/4 Rotolock, 1"1/8 ODF)	Models with 1"3/4 rotolock connection	Industry pack	50
P10	8153003	Solder sleeve, P10 (1"3/4 Rotolock, 1"3/8 ODF)	Models with 1"3/4 rotolock connection	Multipack	10
P03	8153006	Solder sleeve, P03 (2"1/4 Rotolock, 1"5/8 ODF)	Models with 2"1/4 rotolock connection	Multipack	10
P03	7953006	Solder sleeve, P03 (2"1/4 Rotolock, 1"5/8 ODF)	Models with 2"1/4 rotolock connection	Industry pack	50

Rotolock nuts

Type	Code n°	Description	Application	Packaging	Pack size
	8153124	Rotolock nut, 1"3/4	Models with 1"3/4 rotolock connection	Multipack	10
	7953003	Rotolock nut, 1"3/4	Models with 1"3/4 rotolock connection	Industry pack	50
	8153126	Rotolock nut, 2"1/4	Models with 2"1/4 rotolock connection	Multipack	10
	120Z0047	Rotolock nut, 2"1/4	Models with 2"1/4 rotolock connection	Industry pack	50

Rotolock service valves and valve sets (without gasket)

Type	Code n°	Description	Application	Packaging	Pack size
V05	8168030	Rotolock valve, V05 (1"1/4 Rotolock, 7/8" ODF)	Models with 1"1/4 rotolock connection	Multipack	6
V05	7968007	Rotolock valve, V05 (1"1/4 Rotolock, 7/8" ODF)	Models with 1"1/4 rotolock connection	Industry pack	36
V02	8168028	Rotolock valve, V02 (1"3/4 Rotolock, 1"1/8 ODF)	Models with 1"3/4 rotolock connection	Multipack	6
V02	7968009	Rotolock valve, V02 (1"3/4 Rotolock, 1"1/8 ODF)	Models with 1"3/4 rotolock connection	Industry pack	24
V10	8168022	Rotolock valve, V10 (1"3/4 Rotolock, 1"3/8 ODF)	Models with 1"3/4 rotolock connection	Single pack	1
V03	8168026	Rotolock valve, V03 (2-1/4" Rotolock, 1"5/8 ODF)	Models with 2"1/4 rotolock connection	Multipack	6
V03	7968011	Rotolock valve, V03 (2-1/4" Rotolock, 1"5/8 ODF)	Models with 2"1/4 rotolock connection	Industry pack	18
V02-V05	7703008	Valve set, V02(1"3/4~1"1/8), V05(1"1/4~7/8")	VSH088	Multipack	6
V02-V05	120Z0403	Valve set, V02(1"3/4~1"1/8), V05(1"1/4~7/8")	VSH088	Multipack	8
V10-V05	7703392	Valve set, V10 (1"3/4~1"3/8), V05 (1"1/4~7/8")	VSH117	Multipack	6
V03-V02	7703383	Valve set, V03 (2-1/4"~1"5/8), V02 (1"3/4~1"1/8)	VSH170	Multipack	4

Rotolock angle adapters and sets

Type	Code n°	Description	Application	Packaging	Pack size
C03	8168006	Angle adapter, C04 (1"1/4 Rotolock, 3/4" ODF)	Models with 1"1/4 rotolock connection	Multipack	6
C07	8168008	Angle adapter, C07 (1"3/4 Rotolock, 7/8" ODF)	Models with 1"3/4 rotolock connection	Multipack	6
C02	8168005	Angle adapter, C02 (1"3/4 Rotolock, 1"1/8 ODF)	Models with 1"3/4 rotolock connection	Multipack	6

Crankcase heaters & thermostats

Crankcase heaters

Type	Code n°	Description	Application	Packaging	Pack size
	7773109	Belt type crankcase heater, 65 W, 110 V, CE mark, UL		Multipack	6
	7973001	Belt type crankcase heater, 65 W, 110 V, CE mark, UL		Industry pack	50
	7773107	Belt type crankcase heater, 65 W, 230 V, CE mark, UL		Multipack	6
	120Z0038	Belt type crankcase heater, 65 W, 230 V, CE mark, UL		Multipack	8
	7973002	Belt type crankcase heater, 65 W, 230 V, CE mark, UL	VSH088-117	Industry pack	50
	7773117	Belt type crankcase heater, 65 W, 400 V, CE mark, UL		Multipack	6
	120Z0039	Belt type crankcase heater, 65 W, 400 V, CE mark, UL		Multipack	8
	120Z0466	Belt type crankcase heater, 65 W, 460 V, CE mark, UL		Multipack	6
	120Z0467	Belt type crankcase heater, 65 W, 575 V, CE mark, UL		Multipack	6
	7773110	Belt type crankcase heater, 75 W, 110 V, CE mark, UL		Multipack	6
	7773108	Belt type crankcase heater, 75 W, 230 V, CE mark, UL	VSH170	Multipack	6
	7773118	Belt type crankcase heater, 75 W, 400 V, CE mark, UL		Multipack	6

Surface sump heaters

Type	Code n°	Description	Application	Packaging	Pack size
	120Z0388	Surface sump heater, 80 W, 24 V, CE, UL		Multipack	8
	120Z0389	Surface sump heater, 80 W, 230 V, CE, UL		Multipack	8
	120Z0390	Surface sump heater, 80 W, 400 V, CE, UL	VSH088-117	Multipack	8
	120Z0391	Surface sump heater, 80 W, 460 V,CE, UL		Multipack	8
	120Z0402	Surface sump heater, 80 W, 575 V, CE, UL		Multipack	8
	120Z0360	Surface sump heater + bottom insulation, 56 W, 24 V, CE, UL		Multipack	6
	120Z0376	Surface sump heater + bottom insulation, 56 W, 230 V, CE, UL		Multipack	6
	120Z0377	Surface sump heater + bottom insulation, 56 W, 400 V, CE, UL	VSH170	Multipack	6
	120Z0378	Surface sump heater + bottom insulation, 56 W, 460 V, CE, UL		Multipack	6
	120Z0379	Surface sump heater + bottom insulation, 56 W, 575 V, CE, UL		Multipack	6

Discharge thermostats and sensors

Type	Code n°	Description	Application	Packaging	Pack size
	120Z0157	Discharge temperature sensor / converter kit	VSH all models	Single pack	1
	120Z0158	Discharge temperature sensor	VSH all models	Single pack	1
	120Z0159	Discharge temperature converter	VSH all models	Single pack	1
	7750009	Discharge thermostat kit	VSH all models	Multipack	10

Lubricant , acoustic hoods and spareparts

Acoustic hoods

Type	Code n°	Description	Application	Packaging	Pack size
	120Z0152	Acoustic hood for VSD Scroll compressors	VSH088-G/H	Single pack	1
	120Z0153	Acoustic hood for VSD Scroll compressors	VSH117-G/H	Single pack	1
	120Z0154	Acoustic hood for VSD Scroll compressors	VSH170-G/H/J	Single pack	1
	120Z0155	Acoustic hood for VSD Scroll compressors	VSH088-J	Single pack	1
	120Z0156	Acoustic hood for VSD Scroll compressors	VSH117-J	Single pack	1

Mounting kits

Type	Code n°	Description	Application	Packaging	Pack size
	120Z0066	Mounting kit for 1 scroll compressor including 4 grommets, 4 sleeves, 4 bolts, 4 washers	VSH088-117	Single pack	1
	8156138	Mounting kit for 1 scroll compressor including 4 grommets, 4 sleeves, 4 bolts, 4 washers	VSH170	Single pack	1

Terminal boxes, covers & T-block connectors

Type	Code n°	Description	Application	Packaging	Pack size
	8173230	T block connector 52 x 57 mm	VSH088-G/H.VSH117-G/H	Multipack	10
	8173021	T block connector 60 x 75 mm	VSH088-J.VSH117-J.VSH170-G/H	Multipack	10
	8173331	T block connector 80 x 80 mm	VSH170-J	Multipack	10
	120Z0146	Electrical box	VSH088-G/H.VSH117-G/H	Single pack	1
	120Z0147	Electrical box	VSH170-G/H/J	Single pack	1
	120Z0148	Electrical box	VSH088-117-J	Single pack	1
	120Z0149	Electrical box cover	VSH088-G/H.VSH117-G/H	Single pack	1
	120Z0150	Electrical box cover	VSH170-G/H/J	Single pack	1
	120Z0151	Electrical box cover	VSH088-117-J	Single pack	1

Coil

Type	Code n°	Description	Application	Packaging	Pack size
	120Z0143	Coil / 230V	VSH all models	Single pack	1
	120Z0144	Coil / 24V	VSH all models	Single pack	1

Valve Body

Type	Code n°	Description	Application	Packaging	Pack size
	120Z0145	Valve body	VSH all models	Single pack	1

Lubricant / oils

Type	Code n°	Description	Application	Packaging	Pack size
160SZ	7754023	POE lubricant, 160SZ, 1 litre can	VSH with R410A	Multipack	12
160SZ	7754024	POE lubricant, 160SZ, 2 litre can	VSH with R410A	Multipack	8

Miscellaneous

Type	Code n°	Description	Application	Packaging	Pack size
	8156019	Oil sight glass with gaskets (black & white)	VSH all models	Multipack	4
	8156129	Gasket for oil sight glass (white teflon)	VSH all models	Multipack	10
	7956005	Gasket for oil sight glass (white teflon)	VSH all models	Industry pack	50
	8154001	Danfoss CC blue spray paint	VSH all models	Single pack	1

Spare parts frequency converter

LCP's

Code n°	Description	Application	Packaging	Pack size
120Z0326	LCP	Frequency converter / all models	Single pack	1
175Z0929	RS cable to LCP	Frequency converter / all models	Single pack	1
130B1077	LCP Blind cover	Frequency converter IP55/IP66	Single pack	1

Fans

Code n°	Description	Application	Packaging	Pack size
130B3406	Fan 1 (main) IP55	18,5 - 22 kW	Single pack	1

Control card

Code n°	Description	Application	Packaging	Pack size
130B1109	Control card	Frequency converter / all models	Single pack	1

Accessory bags

Code n°	Description	Application	Packaging	Pack size
130B0980	Accessory bag IP20	15 - 18.5 kW	Single pack	1

Relays card

Code n°	Description	Application	Packaging	Pack size
120Z0350	Relays card	Frequency converter	Single pack	1

Previous version

- Page 8: Compressor nomenclature
- Page 30: Approvals and certificates
- Page 50: Accessories

Current version

- Page 8: Updated Evolution index in Compressor nomenclature
- Page 30: Updated Approvals and certificates & Added Low voltage directive
- Page 50: Updated Solder sleeve adapter sets in Accessories

ENGINEERING
TOMORROW

Danfoss Commercial Compressors

is a worldwide manufacturer of compressors and condensing units for refrigeration and HVAC applications. With a wide range of high quality and innovative products we help your company to find the best possible energy efficient solution that respects the environment and reduces total life cycle costs.

We have 40 years of experience within the development of hermetic compressors which has brought us amongst the global leaders in our business, and positioned us as distinct variable speed technology specialists. Today we operate from engineering and manufacturing facilities spanning across three continents.

Danfoss Turbocor Compressors

Danfoss Inverter Scrolls

Danfoss Scrolls

Danfoss Optyma Condensing Units

Danfoss Maneurop Reciprocating Compressors

Danfoss Light Commercial Refrigeration Compressors

Our products can be found in a variety of applications such as rooftops, chillers, residential air conditioners, heatpumps, coldrooms, supermarkets, milk tank cooling and industrial cooling processes.

http://cc.danfoss.com

Danfoss Commercial Compressors, BP 331, 01603 Trévoux Cedex, France | +334 74 00 28 29

member of:
ASERCOM
www.asercom.org

Danfoss can accept no responsibility for possible errors in catalogues, brochures and other printed material. Danfoss reserves the right to alter its products without notice. This also applies to products already on order provided that such alterations can be made without subsequential changes being necessary in specifications already agreed.
All trademarks in this material are property of the respective companies. Danfoss and the Danfoss logotype are trademarks of Danfoss A/S. All rights reserved.

© Danfoss | DCS (CC) | 2016.05