ENGINEERING
TOMORROW

Datasheets

BD50F Direct Current Compressor
R134a, 12/24V DC & 100-240V AC 50/60Hz

General

Code number (without electronic units)	101Z0203	Approvals
Electronic unit 12/24V DC - Standard	101N0212, 30 pcs: 101N0213	–
Electronic unit 12/24V DC - AEO	101N0340, 30 pcs: 101N0341	UL
Electronic unit 12/24V DC & 100-240V AC 50/60Hz	101N0510, 28 pcs: 101N0511	UL / VDE
Electronic unit 12/24V DC - Automotive	101N0650, 30 pcs: 101N0651	UL
Compressors on pallet	150	

TOOL4COOL®
Flexible control settings

Application

Application		LBP/MBP/HBP
Evaporating temperature	°F	-20 to 50
Voltage range DC	VDC	9.6 - 17 / 21.3 - 31.5
Voltage range AC	V/Hz	100 - 240 / 50 - 60
Max. condensing temperature continuous (short)	°F	140 (158)
Max. winding temperature continuous (short)	°F	257 (275)

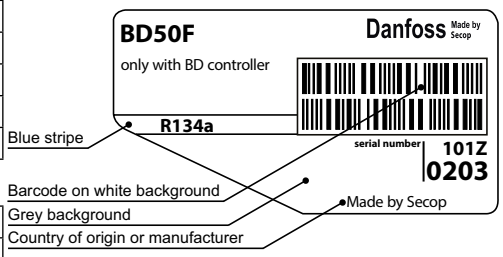

Cooling requirements

Application	LBP	MBP	HBP
32°C	S	S	F_1
38°C	S	S	F_1
43°C	S	S	F_1
Remarks on application: Fan cooling F_1 depending on application and speed.			

S = Static cooling normally sufficient
O = Oil cooling
F_1 = Fan cooling 1.5 m/s (compressor compartment temperature equal to ambient temperature)
F_2 = Fan cooling 3.0 m/s necessary
SG = Suction gas cooling normally sufficent
– = not applicable in this area

Motor

Motor type		variable speed
Resistance, all 3 windings (25°C)	Ω	1.8

Design

Displacement	cu.in.	0.15
Oil quantity (type)	fl.oz.	5.1 (polyolester)
Maximum refrigerant charge	oz.	10.5
Free gas volume in compressor	fl.oz.	29.6
Weight - Compressor/Electronic unit	lbs.	9.5 / 0.42 (Standard)

Standard battery protection settings (refer to electronic unit *Instructions* for optional settings)

Voltage		12V	24V
Cut out	VDC	10.4	22.8
Cut in	VDC	11.7	24.2

Dimensions

Height	inch	A	5.39
		B	5.32
		B1	5.04
		B2	2.87
Suction connector	location/I.D. inch | angle	C	0.252-0259 | 40°
	material | comment		Cu-plated steel | Al cap
Process connector	location/I.D. inch | angle	D	0.252-0259 | 45°
	material | comment		Cu-plated steel | Al cap
Discharge connector	location/I.D. inch | angle	E	0.202-0.205 | 21°
	material | comment		Cu-plated steel | Al cap
Remarks: **inch connectors**			

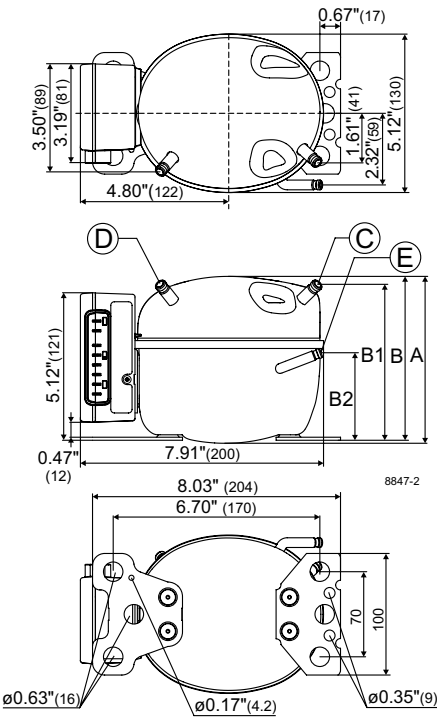

Capacity (ASHRAE LBP) 12V DC, static cooling **BTU/h**

rpm \ °F	-20	-13	-10	0	10	14	20	30	40	41	45	50
2,000	96	127	142	202	274	307	360	459	572	584*	633*	698*
2,500	119	156	174	245	334	375	442	572	724	741*	810*	
3,000	143	189	211	297	403	452	531	682	858*			
3,500	168	219	244	342	464	520*	613*	792*				

Capacity (EN 12900 Household/CECOMAF) 12V DC, static cooling **watt**

rpm \ °F	-20	-13	-10	0	10	14	20	30	40	41	45	50
2,000	22.8	30.1	33.7	47.8	65.1	72.8	85.4	109	135	138*	150*	165*
2,500	28.2	37.0	41.3	58.1	79.1	88.7	105	135	171	175*	191*	
3,000	33.9	44.8	50.1	70.5	95.6	107	126	161	203*			
3,500	40.0	52.0	57.9	81.0	110	123*	145*	187*				

Power consumption 12V DC, static cooling **watt**

rpm \ °F	-20	-13	-10	0	10	14	20	30	40	41	45	50
2,000	26.4	31.4	33.5	40.5	47.4	50.3	54.8	63.0	72.2	73.2*	77.3*	82.8*
2,500	32.8	39.5	42.3	51.7	60.9	64.6	70.2	79.6	89.3	90.3*	94.4*	
3,000	39.9	48.0	51.4	62.5	73.2	77.5	84.0	95.0	107*			
3,500	47.7	56.7	60.5	72.9	85.4	90.6*	98.7*	113*				

Current consumption (for 24V applications the following must be halfed) **A**

rpm \ °F	-20	-13	-10	0	10	14	20	30	40	41	45	50
2,000	2.19	2.58	2.76	3.37	4.01	4.29	4.70	5.43	6.20	6.28*	6.60*	7.01*
2,500	2.76	3.25	3.47	4.23	5.03	5.36	5.86	6.69	7.51	7.59*	7.91*	
3,000	3.38	3.99	4.26	5.16	6.08	6.46	7.03	7.99	8.98*			
3,500	4.04	4.69	4.98	6.00	7.09	7.55*	8.27*	9.51*				

EER (ASHRAE LBP) 12V DC, static cooling **BTU/Wh**

rpm \ °F	-20	-13	-10	0	10	14	20	30	40	41	45	50
2,000	3.64	4.04	4.24	4.98	5.78	6.10	6.57	7.29	7.92	7.98*	8.19*	8.43*
2,500	3.64	3.96	4.12	4.75	5.49	5.80	6.30	7.18	8.11	8.20*	8.58*	
3,000	3.58	3.93	4.10	4.76	5.51	5.82	6.32	7.18	8.06*			
3,500	3.53	3.86	4.03	4.69	5.43	5.74*	6.21*	6.99*				

COP (EN 12900 Household/CECOMAF) 12V DC, static cooling **W/W**

rpm \ °F	-20	-13	-10	0	10	14	20	30	40	41	45	50
2,000	0.86	0.95	1.00	1.17	1.36	1.43	1.54	1.71	1.86	1.87*	1.92*	1.97*
2,500	0.86	0.94	0.97	1.12	1.29	1.37	1.48	1.69	1.90	1.92*	2.01*	
3,000	0.85	0.93	0.97	1.12	1.30	1.37	1.49	1.68	1.89*			
3,500	0.84	0.92	0.95	1.11	1.28	1.35*	1.46*	1.64*				

* fan cooling of electronic unit compulsory

Test conditions with electronic units	101N0212 101N0650	EN 12900/CECOMAF	ASHRAE LBP
Condensing temperature		131°F	130°F
Ambient temperature		90°F	90°F
Suction gas temperature		90°F	90°F
Liquid temperature		no subcooling	90°F

Accessories for BD50F			Code number
Bolt joint for one comp.		Ø: 5/8 in.	118-1917
Bolt joint in quantities		Ø: 5/8 in.	118-1918
Snap-on in quantities		Ø: 5/8 in.	118-1919
Remote kit (without cable)			105N9210
One Wire/LIN gateway			105N9501
DC usage:	Automoblie fuse, DIN 7258	12V: 15A | 24V: 7.5 A	Not deliverable from Secop
	Main switch	min. 20A	
AC usage:	Fuse, 100-240V		
	Main switch	min. 6A	

Compressor speed

Electronit unit Code number	Resistor (R1) [Ω] calculated values	Motor speed [rpm]	Control circuit current [mA]
101N0212 101N0510 101N0650	0	2,000	5
	277	2,500	4
	692	3,000	3
	1523	3,500	2
101N0340 with AEO	0	AEO	6
	173	2,000	5
	450	2,500	4
	865	3,000	3
	1696	3,500	2

In AEO (Adaptive Energy Optimizing) speed mode the BD compressor will always adapt its speed to the actual cooling demand.

Wire dimensions DC

Size Cross section [mm²]	Size AWG [Gauge]	Max. length* 12V operation [m]	Max. length* 12V operation [ft.]	Max. length* 24V operation [m]	Max. length* 24V operation [ft.]
2.5	12	2.5	8	5	16
4	12	4	13	8	26
6	10	6	20	12	39
10	8	10	33	20	66

*Length between battery and electronic unit

Wire dimensions AC

Cross section min. 0.75 mm² or AWG 18

Operational errors

Error code or LED flashes	Error type Can be read out in the software TOOL4COOL®
6	**Thermostat failure** (If the NTC thermistor is short-circuit or has no connection).
5	**Thermal cut-out of electronic unit** (If the refrigeration system has been too heavily loaded, or if the ambient temperature is high, the electronic unit will run too hot).
4	**Minimum motor speed error** (If the refrigeration system is too heavily loaded, the motor cannot maintain minimum speed at approximately 1,850 rpm).
3	**Motor start error** (The rotor is blocked or the differential pressure in the refrigeration system is too high (>5 bar)).
2	**Too many start attempts or fan over current** (Too many compressor or fan starts in short time or fan current higher than $0.5A_{avg}$).
1	**Battery protection cut-out** (The voltage is outside the cut-out setting).

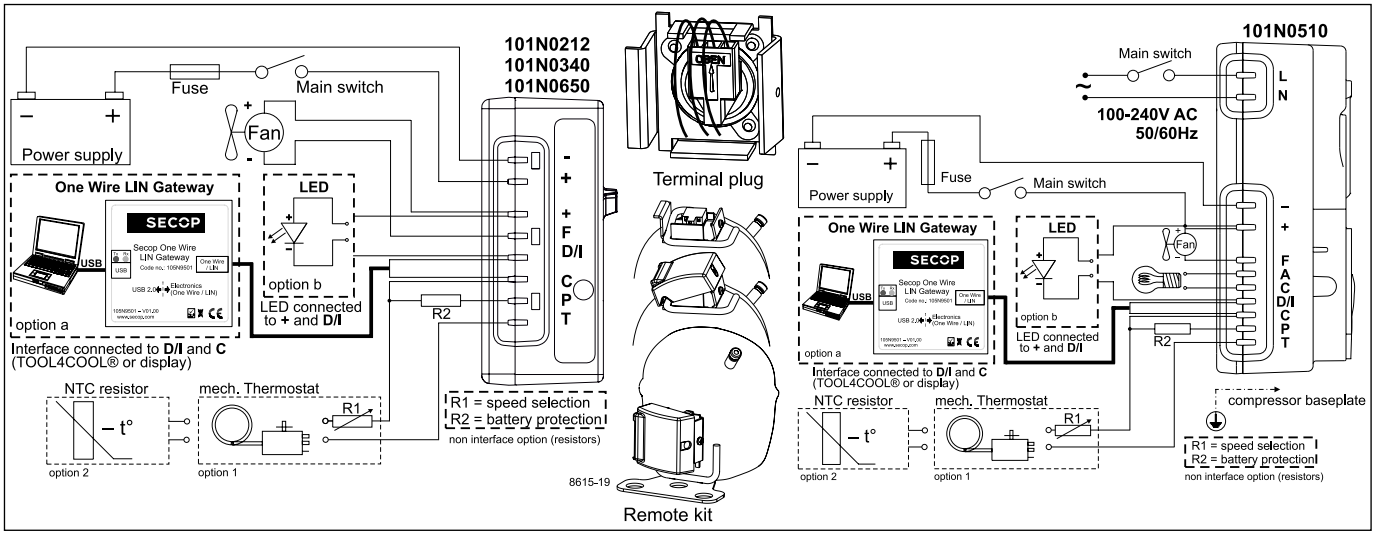

Danfoss can accept no responsibility for possible errors in catalogues, brochures and other printed material. Danfoss reserves the right to alter its products without notice. This also applies to products already on order provided that such alterations can be made without subsequential changes being necessary in specifications already agreed.
All trademarks in this material are property of the respective companies. Danfoss and the Danfoss logotype are trademarks of Danfoss A/S. All rights reserved.