ENGINEERING
TOMORROW

Installation Guide

Solenoid Valve

Types EVRS 3 – 20 and EVRST 10 – 20

032R9513

032R9513

Refrigerants:

R744, R717, R22/R407C, R404A/R507, R410A, R134a, R407A, R23.
For other refrigerants, please contact Danfoss.

Body material – stainless steel
1.4308 for EVRS 10, EVRS 15, EVRS 20
1.4301 for EVRS 3

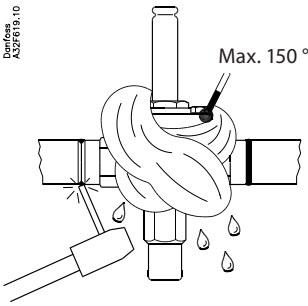

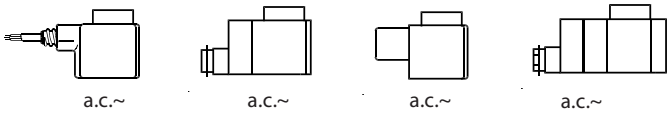

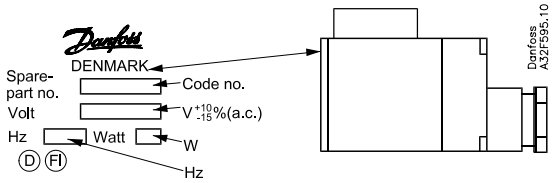

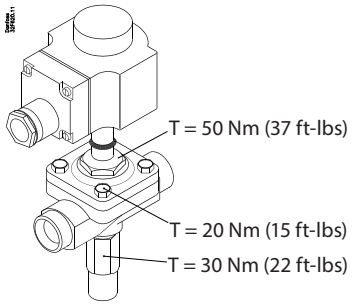

10 W a.c.		$t_{max.}$ 80 °C (175 °F)
10 / 12 W a.c.		$t_{max.}$ 80 °C (175 °F)
20 W d.c.		$t_{max.}$ 50 °C (120 °F)
		$t_{min.}$ -40 °C (-40 °F)

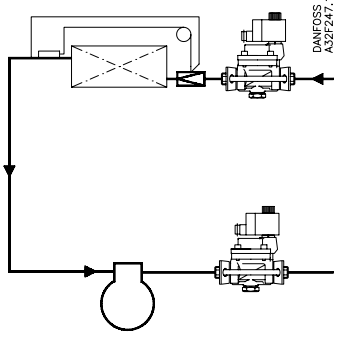

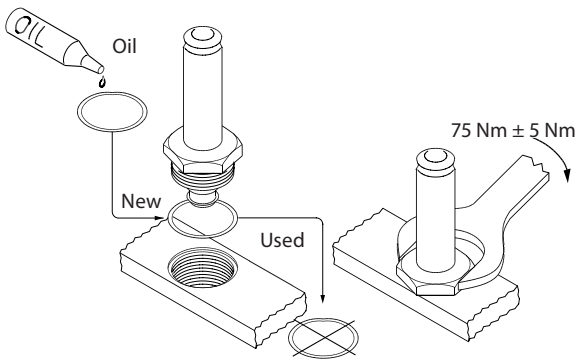

Min. medium temperature		-40 °C (-40 °F)
Max. medium temperature		105 °C (221 °F)
Max. working pressure PS/MWP	EVRS/T 3 EVRS/T 10 EVRS/T 15	50 barg / 725 psig
	EVRS/T 20	28 barg / 406 psig for 032F3086 and 032F2237 50 barg / 725 psig for 032F5437 and 032F5438
Max. opening diff. pressure: **Max. working pressure PS/MWP:**		

Warning
Never switch on power to the coil when the coil is dismounted from the valve. Otherwise the coil may be damaged and there is risk of injuries and burns.

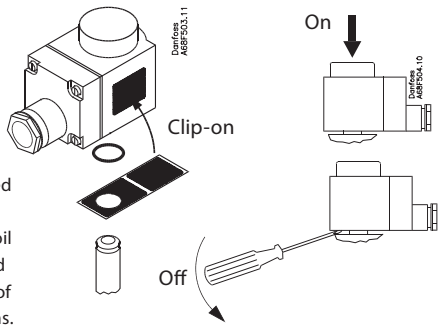

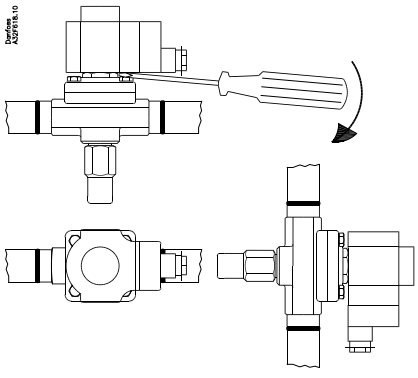

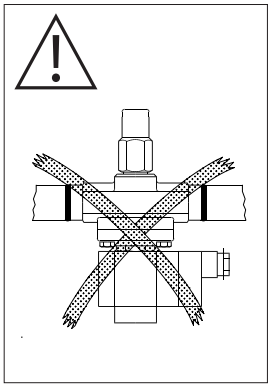

The manual opener of EVRS 3-20 and EVRST 10-20 is intended to be activated only during initial pressure testing of the refrigeration system.
After pressure testing or service-related manual forced opening of the manual opener the spindle **must** be turned fully back to back-seated position to avoid any packing gland leakage.
Furthermore it is essential that the sealing cap is properly reinstalled. This will eliminate any risk of leakage from the manual opener.

EVRS 3

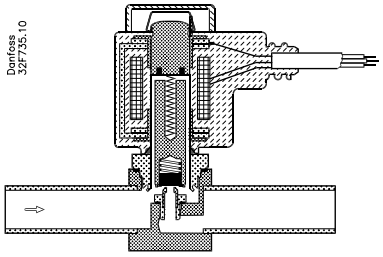

EVRS 10 – 20

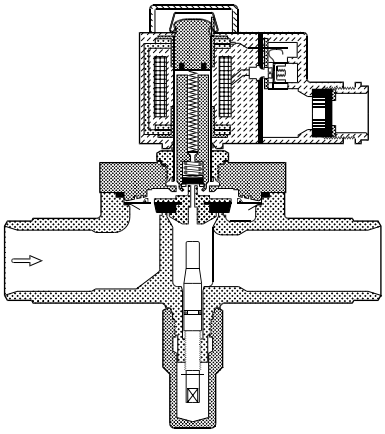

EVRST 10 – 20

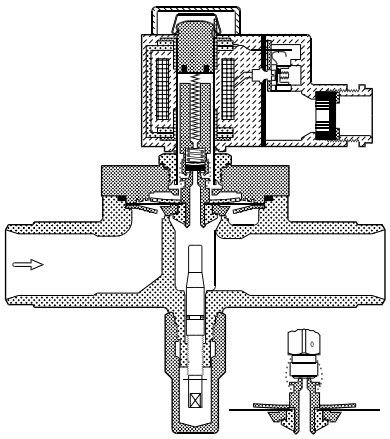

EVRS 3

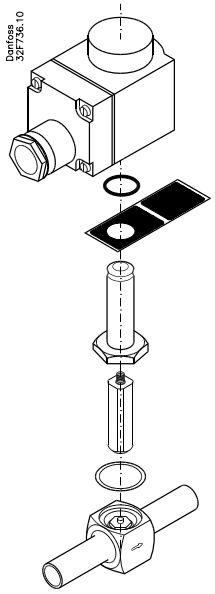

EVRS 10 – 20

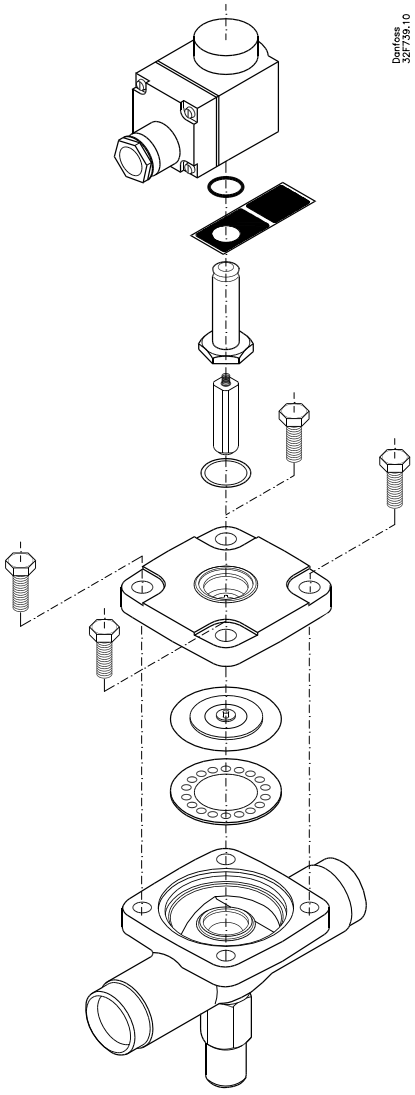
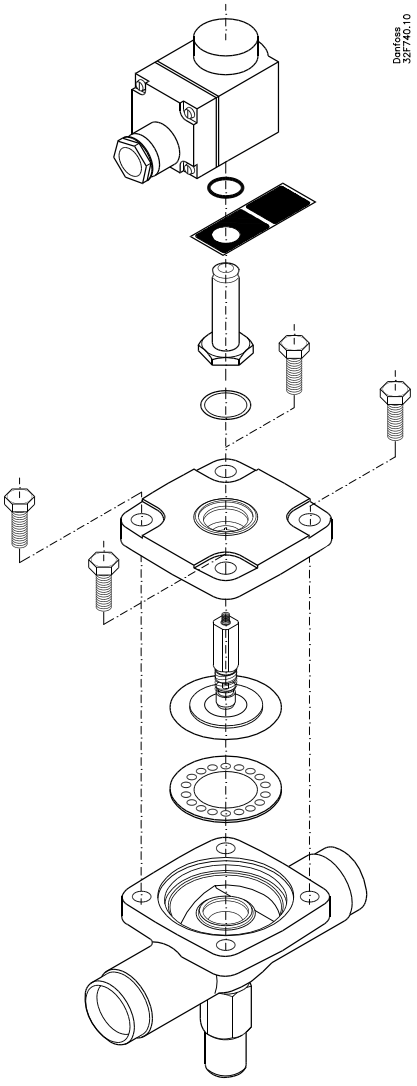
EVRST 10 – 20