General Characteristics

Model number (on compressor nameplate)		VZH028CJANA
Code number for Singlepack*		120G0064
Code number for Industrial pack**		120G0135
Drawing number		0VG8213b
Suction and discharge connections		Brazed
Suction connection		3/4 " ODF
Discharge connection		1/2 " ODF
Oil sight glass		Threaded
Oil equalisation connection		None
Oil drain connection		1/4" flare
LP gauge port		None
IPR valve		Yes
Swept volume	27.8 cm3/rev	
Displacement @ Nominal speed	6.0 m3/h @ 3600 rpm	
Net weight	26 kg	
Oil charge	1.1 litre, PVE - FVC32D	
Maximum number of starts per hour	12	
Refrigerant charge limit	3.6 kg	
Approved refrigerants	R410A	

Electrical Characteristics

Nominal voltage	Supply voltage 200-240V/3/50-60Hz
Voltage range	180-264 V supply to frequency converter
Winding resistance (between phases) +/- 7% at 25ºC	0.19 Ω
Rated Load Amps (RLA)	22 A
Motor protection	Motor protection by frequency converter

Recommended Installation torques

Oil sight glass	52.5 Nm
Power connections / Earth connection	0 Nm / 2 Nm
Mounting bolts	11 Nm

Parts shipped with compressor

Mounting kit with grommets and sleeves
Initial oil charge
Installation instructions

Approvals : CE certified, UL certified (file SA11565), -

*Singlepack: Compressor in cardboard box

**Industrial pack: 12 Unboxed compressors on pallet (order per multiples of 12)

Dimensions

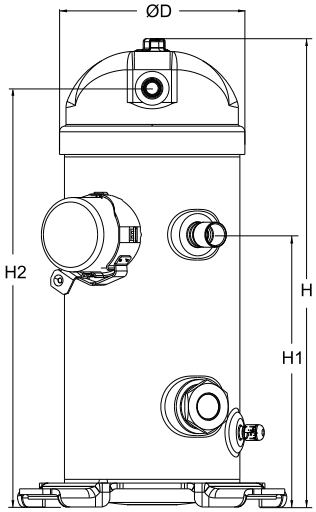

D=164.5 mm
H=415.4 mm
H1=241.5 mm
H2=371.4 mm
H3=- mm

Terminal box

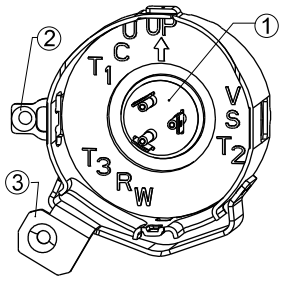

IP22

1: Power connections
2: Earth connection
3: EMC braket with shielded cable

Danfoss can accept no responsibility for possible errors in catalogues, brochures and other printed material. Danfoss reserves the right to alter its products without notice.
This also applies to products already on order provided that such alternations can be made without subsequential changes being necessary in specifications already agreed.
All trademarks in this material are property of the respective companies. Danfoss and the Danfoss logotype are trademarks of Danfoss A/S. All rights reserved.

Rotolock accessories, suction side	Code no.
Rotolock adapter (1-1/4" Rotolock, 3/4" ODF)	120Z0366

Rotolock accessories, discharge side	Code no.
Rotolock adapter (1" Rotolock, 1/2" ODF)	120Z0365

Rotolock accessories, sets	Code no.
Solder sleeve adapter set (1-1/4" Rotolock, 3/4" ODF), (1" Rotolock, 1/2" ODF)	120Z0126

Oil / lubricants	Code no.

Crankcase heaters	Code no.
Belt type crankcase heater, 70 W, 240 V, CE mark, UL	120Z5040
Belt type crankcase heater, 70 W, 400/460V, CE mark, UL	120Z5041

Miscellaneous accessories	Code no.
Acoustic hood	120Z5043

Spare parts	Code no.
Mounting kit for 1 scroll compressor including 4 grommets, 4 sleeves, 4 bolts, 4 washers, 2 grounding screws	120Z0622
Terminal box cover	120Z5015

Solder sleeve adapter set

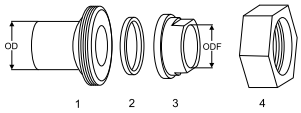

1: Rotolock adapter (Suc & Dis)
2: Gasket (Suc & Dis)
3: Solder sleeve (Suc & Dis)
4: Rotolock nut (Suc & Dis)

Danfoss can accept no responsibility for possible errors in catalogues, brochures and other printed material. Danfoss reserves the right to alter its products without notice.
This also applies to products already on order provided that such alternations can be made without subsequential changes being necessary in specifications already agreed.
All trademarks in this material are property of the respective companies. Danfoss and the Danfoss logotype are trademarks of Danfoss A/S. All rights reserved.

Performance data at 15 Hz, EN 12900 rating conditions

R410A

Cond. temp. in °C (tc)	Evaporating temperature in °C (to)								
	-20	-15	-10	-5	0	5	10	15	20
Cooling capacity in W									
5	-	1 329	1 618	1 950	2 328	-	-	-	-
10	-	1 292	1 579	1 908	2 282	2 706	-	-	-
15	-	1 242	1 526	1 851	2 220	2 636	3 104	-	-
20	-	1 180	1 460	1 779	2 141	2 549	3 007	3 518	-
25	-	1 108	1 382	1 694	2 048	2 446	2 893	3 391	3 946
30	-	-	1 293	1 597	1 940	2 327	2 761	3 246	3 785
35	-	-	-	1 488	1 821	2 195	2 615	3 084	3 605
40	-	-	-	-	-	-	-	-	-
Power input in W									
5	-	308	283	256	231	-	-	-	-
10	-	347	324	297	269	242	-	-	-
15	-	389	369	343	313	283	255	-	-
20	-	433	418	394	365	332	300	270	-
25	-	479	470	451	423	390	355	320	289
30	-	-	526	512	488	456	420	381	344
35	-	-	-	579	560	530	494	454	412
40	-	-	-	-	-	-	-	-	-
Current consumption in A									
5	-	1.44	1.38	1.28	1.13	-	-	-	-
10	-	1.57	1.52	1.44	1.31	1.11	-	-	-
15	-	1.70	1.67	1.61	1.50	1.32	1.07	-	-
20	-	1.84	1.83	1.78	1.69	1.54	1.31	0.99	-
25	-	2.00	1.99	1.97	1.90	1.77	1.56	1.27	0.87
30	-	-	2.18	2.16	2.11	2.00	1.83	1.56	1.19
35	-	-	-	2.38	2.34	2.26	2.10	1.86	1.52
40	-	-	-	-	-	-	-	-	-
Mass flow in kg/h									
5	-	22	27	32	37	-	-	-	-
10	-	22	27	32	38	45	-	-	-
15	-	22	27	32	38	45	53	-	-
20	-	22	27	32	38	45	53	62	-
25	-	21	26	32	38	45	53	62	72
30	-	-	26	32	38	45	53	62	72
35	-	-	-	31	37	45	53	62	72
40	-	-	-	-	-	-	-	-	-
Coefficient of performance (C.O.P.)									
5	-	4.32	5.72	7.61	10.10	-	-	-	-
10	-	3.72	4.87	6.43	8.50	11.19	-	-	-
15	-	3.19	4.13	5.40	7.08	9.32	12.19	-	-
20	-	2.73	3.49	4.51	5.87	7.67	10.03	13.03	-
25	-	2.31	2.94	3.76	4.84	6.27	8.15	10.60	13.68
30	-	-	2.46	3.12	3.98	5.10	6.58	8.52	11.01
35	-	-	-	2.57	3.25	4.14	5.29	6.80	8.75
40	-	-	-	-	-	-	-	-	-

Nominal performance at to = 5 °C, tc = 50 °C

Cooling capacity	-	W
Power input	-	W
Current consumption	-	A
Mass flow	-	kg/h
C.O.P.	-	

Pressure switch settings

Maximum HP switch setting	43.8	bar(g)
Minimum LP switch setting	1	bar(g)
LP pump down setting	1.2	bar(g)

Sound power data

Sound power level	dB(A)
With accoustic hood	dB(A)

to: Evaporating temperature at dew point
tc: Condensing temperature at dew point
Rating conditions : Superheat = 10 K , Subcooling = 0 K

Tolerance according EN12900

Danfoss can accept no responsibility for possible errors in catalogues, brochures and other printed material. Danfoss reserves the right to alter its products without notice.
This also applies to products already on order provided that such alternations can be made without subsequential changes being necessary in specifications already agreed.
All trademarks in this material are property of the respective companies. Danfoss and the Danfoss logotype are trademarks of Danfoss A/S. All rights reserved.

Performance data at 15 Hz, ARI rating conditions

R410A

Cond. temp. in °C (tc)	Evaporating temperature in °C (to)								
	-20	-15	-10	-5	0	5	10	15	20
Cooling capacity in W									
5	-	1 404	1 708	2 057	2 454	-	-	-	-
10	-	1 368	1 671	2 018	2 413	2 859	-	-	-
15	-	1 320	1 621	1 965	2 354	2 794	3 288	-	-
20	-	1 259	1 557	1 896	2 280	2 712	3 197	3 739	-
25	-	1 187	1 480	1 813	2 190	2 614	3 089	3 619	4 208
30	-	-	1 393	1 718	2 086	2 499	2 963	3 481	4 056
35	-	-	-	1 611	1 968	2 371	2 822	3 325	3 885
40	-	-	-	-	-	-	-	-	-
Power input in W									
5	-	308	283	256	231	-	-	-	-
10	-	347	324	297	269	242	-	-	-
15	-	389	369	343	313	283	255	-	-
20	-	433	418	394	365	332	300	270	-
25	-	479	470	451	423	390	355	320	289
30	-	-	526	512	488	456	420	381	344
35	-	-	-	579	560	530	494	454	412
40	-	-	-	-	-	-	-	-	-
Current consumption in A									
5	-	1.44	1.38	1.28	1.13	-	-	-	-
10	-	1.57	1.52	1.44	1.31	1.11	-	-	-
15	-	1.70	1.67	1.61	1.50	1.32	1.07	-	-
20	-	1.84	1.83	1.78	1.69	1.54	1.31	0.99	-
25	-	2.00	1.99	1.97	1.90	1.77	1.56	1.27	0.87
30	-	-	2.18	2.16	2.11	2.00	1.83	1.56	1.19
35	-	-	-	2.38	2.34	2.26	2.10	1.86	1.52
40	-	-	-	-	-	-	-	-	-
Mass flow in kg/h									
5	-	22	26	31	37	-	-	-	-
10	-	22	27	32	38	44	-	-	-
15	-	22	27	32	38	45	52	-	-
20	-	22	27	32	38	45	53	61	-
25	-	21	26	32	38	45	53	62	71
30	-	-	26	31	38	45	53	62	71
35	-	-	-	31	37	44	52	61	71
40	-	-	-	-	-	-	-	-	-
Coefficient of performance (C.O.P.)									
5	-	4.56	6.04	8.03	10.64	-	-	-	-
10	-	3.94	5.16	6.80	8.99	11.83	-	-	-
15	-	3.39	4.39	5.73	7.51	9.88	12.91	-	-
20	-	2.91	3.72	4.81	6.25	8.16	10.66	13.84	-
25	-	2.48	3.15	4.02	5.17	6.70	8.70	11.31	14.58
30	-	-	2.65	3.35	4.27	5.48	7.06	9.13	11.80
35	-	-	-	2.78	3.52	4.47	5.71	7.33	9.43
40	-	-	-	-	-	-	-	-	-

Nominal performance at to = 7.2 °C, tc = 54.4 °C

Cooling capacity	-	W
Power input	-	W
Current consumption	-	A
Mass flow	-	kg/h
C.O.P.	-	

Pressure switch settings

Maximum HP switch setting	43.8	bar(g)
Minimum LP switch setting	1	bar(g)
LP pump down setting	1.2	bar(g)

Sound power data

Sound power level	dB(A)
With accoustic hood	dB(A)

to: Evaporating temperature at dew point
tc: Condensing temperature at dew point
Rating conditions : Superheat = 11.1 K , Subcooling = 8.3 K

Tolerance according EN12900

Danfoss can accept no responsibility for possible errors in catalogues, brochures and other printed material. Danfoss reserves the right to alter its products without notice.
This also applies to products already on order provided that such alternations can be made without subsequential changes being necessary in specifications already agreed.
All trademarks in this material are property of the respective companies. Danfoss and the Danfoss logotype are trademarks of Danfoss A/S. All rights reserved.

Performance data at 20 Hz, EN 12900 rating conditions

R410A

Cond. temp. in °C (tc)	Evaporating temperature in °C (to)								
	-20	-15	-10	-5	0	5	10	15	20
Cooling capacity in W									
5	-	1 842	2 250	2 720	3 260	-	-	-	-
10	-	1 778	2 178	2 639	3 166	3 766	-	-	-
15	-	1 702	2 094	2 544	3 058	3 642	4 301	-	-
20	-	1 617	1 998	2 435	2 935	3 502	4 142	4 860	-
30	-	-	1 775	2 184	2 650	3 179	3 776	4 446	5 195
35	-	-	-	2 042	2 489	2 997	3 570	4 215	4 935
40	-	-	-	-	2 317	2 802	3 350	3 967	4 658
50	-	-	-	-	-	-	2 868	3 425	4 049
Power input in W									
5	-	364	327	278	216	-	-	-	-
10	-	419	390	348	294	227	-	-	-
15	-	473	452	418	371	311	239	-	-
20	-	529	515	489	450	397	332	253	-
30	-	-	648	638	615	578	527	462	384
35	-	-	-	719	703	674	631	574	502
40	-	-	-	-	797	776	741	691	627
50	-	-	-	-	-	-	982	948	899
Current consumption in A									
5	-	1.59	1.50	1.37	1.17	-	-	-	-
10	-	1.76	1.70	1.59	1.42	1.18	-	-	-
15	-	1.92	1.88	1.80	1.67	1.46	1.15	-	-
20	-	2.09	2.07	2.01	1.91	1.73	1.46	1.09	-
30	-	-	2.45	2.44	2.39	2.27	2.08	1.80	1.39
35	-	-	-	2.67	2.64	2.56	2.40	2.15	1.79
40	-	-	-	-	2.92	2.86	2.74	2.53	2.21
50	-	-	-	-	-	-	3.47	3.33	3.09
Mass flow in kg/h									
5	-	31	37	44	52	-	-	-	-
10	-	31	37	44	53	62	-	-	-
15	-	30	37	44	53	62	73	-	-
20	-	30	37	44	53	62	73	85	-
30	-	-	36	43	52	62	73	85	99
35	-	-	-	42	51	61	72	85	98
40	-	-	-	-	50	60	71	84	98
50	-	-	-	-	-	-	69	82	96
Coefficient of performance (C.O.P.)									
5	-	5.06	6.88	9.80	15.07	-	-	-	-
10	-	4.24	5.59	7.59	10.78	16.59	-	-	-
15	-	3.60	4.63	6.08	8.24	11.69	18.00	-	-
20	-	3.06	3.88	4.98	6.52	8.81	12.48	19.20	-
30	-	-	2.74	3.42	4.31	5.50	7.17	9.62	13.55
35	-	-	-	2.84	3.54	4.44	5.66	7.35	9.83
40	-	-	-	-	2.91	3.61	4.52	5.74	7.43
50	-	-	-	-	-	-	2.92	3.61	4.50

Nominal performance at to = 5 °C, tc = 50 °C

Cooling capacity	-	W
Power input	-	W
Current consumption	-	A
Mass flow	-	kg/h
C.O.P.	-	

Pressure switch settings

Maximum HP switch setting	43.8	bar(g)
Minimum LP switch setting	1	bar(g)
LP pump down setting	1.2	bar(g)

Sound power data

Sound power level	dB(A)
With accoustic hood	dB(A)

to: Evaporating temperature at dew point
tc: Condensing temperature at dew point
Rating conditions : Superheat = 10 K , Subcooling = 0 K

Tolerance according EN12900

Danfoss can accept no responsibility for possible errors in catalogues, brochures and other printed material. Danfoss reserves the right to alter its products without notice.
This also applies to products already on order provided that such alternations can be made without subsequential changes being necessary in specifications already agreed.
All trademarks in this material are property of the respective companies. Danfoss and the Danfoss logotype are trademarks of Danfoss A/S. All rights reserved.

Performance data at 20 Hz, ARI rating conditions

R410A

Cond. temp. in °C (tc)	Evaporating temperature in °C (to)								
	-20	-15	-10	-5	0	5	10	15	20
Cooling capacity in W									
5	-	1 945	2 374	2 869	3 436	-	-	-	-
10	-	1 883	2 305	2 791	3 347	3 979	-	-	-
15	-	1 809	2 224	2 700	3 244	3 861	4 556	-	-
20	-	1 725	2 130	2 595	3 125	3 726	4 404	5 164	-
30	-	-	1 912	2 349	2 848	3 414	4 052	4 768	5 567
35	-	-	-	2 210	2 691	3 237	3 853	4 545	5 318
40	-	-	-	-	2 523	3 048	3 641	4 307	5 053
50	-	-	-	-	-	-	3 177	3 789	4 476
Power input in W									
5	-	364	327	278	216	-	-	-	-
10	-	419	390	348	294	227	-	-	-
15	-	473	452	418	371	311	239	-	-
20	-	529	515	489	450	397	332	253	-
30	-	-	648	638	615	578	527	462	384
35	-	-	-	719	703	674	631	574	502
40	-	-	-	-	797	776	741	691	627
50	-	-	-	-	-	-	982	948	899
Current consumption in A									
5	-	1.59	1.50	1.37	1.17	-	-	-	-
10	-	1.76	1.70	1.59	1.42	1.18	-	-	-
15	-	1.92	1.88	1.80	1.67	1.46	1.15	-	-
20	-	2.09	2.07	2.01	1.91	1.73	1.46	1.09	-
30	-	-	2.45	2.44	2.39	2.27	2.08	1.80	1.39
35	-	-	-	2.67	2.64	2.56	2.40	2.15	1.79
40	-	-	-	-	2.92	2.86	2.74	2.53	2.21
50	-	-	-	-	-	-	3.47	3.33	3.09
Mass flow in kg/h									
5	-	30	37	44	52	-	-	-	-
10	-	30	37	44	52	62	-	-	-
15	-	30	37	44	52	62	73	-	-
20	-	30	36	44	52	62	73	85	-
30	-	-	35	43	52	61	72	84	98
35	-	-	-	42	51	61	72	84	98
40	-	-	-	-	50	60	71	83	97
50	-	-	-	-	-	-	69	81	95
Coefficient of performance (C.O.P.)									
5	-	5.35	7.26	10.33	15.88	-	-	-	-
10	-	4.49	5.92	8.02	11.40	17.53	-	-	-
15	-	3.82	4.92	6.46	8.74	12.39	19.07	-	-
20	-	3.26	4.13	5.30	6.95	9.38	13.27	20.40	-
30	-	-	2.95	3.68	4.63	5.91	7.69	10.32	14.51
35	-	-	-	3.08	3.83	4.80	6.11	7.92	10.59
40	-	-	-	-	3.17	3.93	4.91	6.23	8.06
50	-	-	-	-	-	-	3.24	4.00	4.98

Nominal performance at to = 7.2 °C, tc = 54.4 °C

Cooling capacity	-	W
Power input	-	W
Current consumption	-	A
Mass flow	-	kg/h
C.O.P.	-	

Pressure switch settings

Maximum HP switch setting	43.8	bar(g)
Minimum LP switch setting	1	bar(g)
LP pump down setting	1.2	bar(g)

Sound power data

Sound power level	dB(A)
With accoustic hood	dB(A)

to: Evaporating temperature at dew point
tc: Condensing temperature at dew point
Rating conditions : Superheat = 11.1 K , Subcooling = 8.3 K

Tolerance according EN12900

Danfoss can accept no responsibility for possible errors in catalogues, brochures and other printed material. Danfoss reserves the right to alter its products without notice.
This also applies to products already on order provided that such alternations can be made without subsequential changes being necessary in specifications already agreed.
All trademarks in this material are property of the respective companies. Danfoss and the Danfoss logotype are trademarks of Danfoss A/S. All rights reserved.

Performance data at 25 Hz, EN 12900 rating conditions

R410A

Cond. temp. in °C (tc)	Evaporating temperature in °C (to)								
	-20	-15	-10	-5	0	5	10	15	20
Cooling capacity in W									
5	-	2 352	2 877	3 485	4 184	-	-	-	-
10	-	2 262	2 773	3 365	4 045	4 818	-	-	-
15	-	2 162	2 659	3 233	3 892	4 642	5 490	-	-
20	-	2 053	2 534	3 090	3 726	4 451	5 271	6 193	-
30	-	-	2 257	2 770	3 358	4 028	4 787	5 642	6 600
35	-	-	-	2 595	3 157	3 798	4 524	5 343	6 261
40	-	-	-	-	2 945	3 555	4 246	5 028	5 905
50	-	-	-	-	-	-	3 650	4 350	5 139
Power input in W									
5	-	425	376	306	210	-	-	-	-
10	-	495	460	404	326	221	-	-	-
15	-	563	540	498	435	347	233	-	-
20	-	629	617	589	540	468	372	247	-
30	-	-	775	769	746	704	639	550	432
35	-	-	-	863	852	823	772	699	599
40	-	-	-	-	961	944	908	849	766
50	-	-	-	-	-	-	1 193	1 162	1 109
Current consumption in A									
5	-	1.75	1.64	1.47	1.22	-	-	-	-
10	-	1.96	1.88	1.75	1.55	1.25	-	-	-
15	-	2.16	2.11	2.01	1.85	1.60	1.24	-	-
20	-	2.35	2.32	2.25	2.13	1.93	1.63	1.20	-
30	-	-	2.74	2.73	2.68	2.56	2.36	2.04	1.60
35	-	-	-	2.99	2.96	2.88	2.72	2.46	2.08
40	-	-	-	-	3.26	3.22	3.10	2.89	2.56
50	-	-	-	-	-	-	3.92	3.80	3.58
Mass flow in kg/h									
5	-	39	47	56	67	-	-	-	-
10	-	39	47	56	67	79	-	-	-
15	-	39	47	56	67	79	93	-	-
20	-	38	46	56	67	79	93	109	-
30	-	-	45	55	66	78	92	108	126
35	-	-	-	54	65	77	91	107	125
40	-	-	-	-	64	76	90	106	124
50	-	-	-	-	-	-	88	104	121
Coefficient of performance (C.O.P.)									
5	-	5.54	7.65	11.41	19.88	-	-	-	-
10	-	4.57	6.03	8.32	12.42	21.78	-	-	-
15	-	3.84	4.93	6.49	8.95	13.37	23.57	-	-
20	-	3.26	4.10	5.25	6.90	9.50	14.18	25.10	-
30	-	-	2.91	3.60	4.50	5.72	7.49	10.27	15.28
35	-	-	-	3.01	3.71	4.62	5.86	7.65	10.46
40	-	-	-	-	3.06	3.76	4.68	5.92	7.71
50	-	-	-	-	-	-	3.06	3.74	4.63

Nominal performance at to = 5 °C, tc = 50 °C

Cooling capacity	-	W
Power input	-	W
Current consumption	-	A
Mass flow	-	kg/h
C.O.P.	-	

Pressure switch settings

Maximum HP switch setting	43.8	bar(g)
Minimum LP switch setting	1	bar(g)
LP pump down setting	1.2	bar(g)

Sound power data

Sound power level	dB(A)
With accoustic hood	dB(A)

to: Evaporating temperature at dew point
tc: Condensing temperature at dew point
Rating conditions : Superheat = 10 K , Subcooling = 0 K

Tolerance according EN12900

Danfoss can accept no responsibility for possible errors in catalogues, brochures and other printed material. Danfoss reserves the right to alter its products without notice.
This also applies to products already on order provided that such alternations can be made without subsequential changes being necessary in specifications already agreed.
All trademarks in this material are property of the respective companies. Danfoss and the Danfoss logotype are trademarks of Danfoss A/S. All rights reserved.

Performance data at 25 Hz, ARI rating conditions

R410A

Cond. temp. in °C (tc)	Evaporating temperature in °C (to)								
	-20	-15	-10	-5	0	5	10	15	20
Cooling capacity in W									
5	-	2 484	3 036	3 676	4 410	-	-	-	-
10	-	2 396	2 936	3 560	4 276	5 090	-	-	-
15	-	2 298	2 824	3 432	4 128	4 920	5 816	-	-
20	-	2 191	2 702	3 292	3 967	4 736	5 604	6 581	-
30	-	-	2 430	2 980	3 609	4 326	5 137	6 050	7 072
35	-	-	-	2 809	3 413	4 102	4 882	5 761	6 747
40	-	-	-	-	3 207	3 867	4 615	5 459	6 406
50	-	-	-	-	-	-	4 043	4 813	5 680
Power input in W									
5	-	425	376	306	210	-	-	-	-
10	-	495	460	404	326	221	-	-	-
15	-	563	540	498	435	347	233	-	-
20	-	629	617	589	540	468	372	247	-
30	-	-	775	769	746	704	639	550	432
35	-	-	-	863	852	823	772	699	599
40	-	-	-	-	961	944	908	849	766
50	-	-	-	-	-	-	1 193	1 162	1 109
Current consumption in A									
5	-	1.75	1.64	1.47	1.22	-	-	-	-
10	-	1.96	1.88	1.75	1.55	1.25	-	-	-
15	-	2.16	2.11	2.01	1.85	1.60	1.24	-	-
20	-	2.35	2.32	2.25	2.13	1.93	1.63	1.20	-
30	-	-	2.74	2.73	2.68	2.56	2.36	2.04	1.60
35	-	-	-	2.99	2.96	2.88	2.72	2.46	2.08
40	-	-	-	-	3.26	3.22	3.10	2.89	2.56
50	-	-	-	-	-	-	3.92	3.80	3.58
Mass flow in kg/h									
5	-	39	47	56	67	-	-	-	-
10	-	39	47	56	67	79	-	-	-
15	-	38	47	56	67	79	93	-	-
20	-	38	46	56	66	79	92	108	-
30	-	-	45	54	65	78	91	107	125
35	-	-	-	54	64	77	91	106	124
40	-	-	-	-	63	76	90	105	123
50	-	-	-	-	-	-	87	103	120
Coefficient of performance (C.O.P.)									
5	-	5.85	8.07	12.03	20.95	-	-	-	-
10	-	4.84	6.38	8.81	13.13	23.02	-	-	-
15	-	4.08	5.23	6.89	9.50	14.17	24.97	-	-
20	-	3.48	4.38	5.59	7.35	10.11	15.08	26.67	-
30	-	-	3.14	3.87	4.84	6.14	8.04	11.01	16.37
35	-	-	-	3.25	4.01	4.99	6.32	8.25	11.27
40	-	-	-	-	3.34	4.10	5.08	6.43	8.36
50	-	-	-	-	-	-	3.39	4.14	5.12

Nominal performance at to = 7.2 °C, tc = 54.4 °C

Cooling capacity	-	W
Power input	-	W
Current consumption	-	A
Mass flow	-	kg/h
C.O.P.	-	

Pressure switch settings

Maximum HP switch setting	43.8	bar(g)
Minimum LP switch setting	1	bar(g)
LP pump down setting	1.2	bar(g)

Sound power data

Sound power level	dB(A)
With accoustic hood	dB(A)

to: Evaporating temperature at dew point
tc: Condensing temperature at dew point
Rating conditions : Superheat = 11.1 K , Subcooling = 8.3 K

Tolerance according EN12900

Danfoss can accept no responsibility for possible errors in catalogues, brochures and other printed material. Danfoss reserves the right to alter its products without notice.
This also applies to products already on order provided that such alternations can be made without subsequential changes being necessary in specifications already agreed.
All trademarks in this material are property of the respective companies. Danfoss and the Danfoss logotype are trademarks of Danfoss A/S. All rights reserved.

Performance data at 30 Hz, EN 12900 rating conditions

R410A

Cond. temp. in °C (tc)	Evaporating temperature in °C (to)								
	-25	-20	-15	-10	-5	0	5	10	20
Cooling capacity in W									
5	1 851	2 312	2 859	3 500	4 244	5 100	-	-	-
15	1 666	2 104	2 620	3 222	3 920	4 721	5 635	6 671	-
20	1 566	1 990	2 488	3 069	3 741	4 514	5 395	6 393	-
30	1 353	1 745	2 204	2 738	3 355	4 065	4 875	5 795	7 998
40	-	1 482	1 895	2 376	2 933	3 573	4 307	5 142	7 150
50	-	-	-	1 985	2 474	3 040	3 689	4 432	6 228
55	-	-	-	-	2 231	2 755	3 359	4 051	5 734
60	-	-	-	-	-	2 455	3 010	3 648	5 207
Power input in W									
5	538	525	491	431	340	213	-	-	-
15	652	661	656	632	583	504	390	237	-
20	710	728	734	724	693	635	545	419	-
30	844	871	894	907	904	882	835	757	489
40	-	1 049	1 079	1 107	1 125	1 130	1 116	1 078	910
50	-	-	-	1 348	1 379	1 403	1 414	1 408	1 322
55	-	-	-	-	1 525	1 556	1 576	1 583	1 531
60	-	-	-	-	-	1 723	1 751	1 768	1 748
Current consumption in A									
5	2.08	2.01	1.92	1.79	1.58	1.28	-	-	-
15	2.49	2.45	2.41	2.34	2.23	2.04	1.75	1.34	-
20	2.67	2.64	2.62	2.58	2.51	2.37	2.14	1.80	-
30	3.07	3.04	3.05	3.05	3.04	2.99	2.87	2.65	1.82
40	-	3.54	3.55	3.58	3.62	3.63	3.59	3.48	2.93
50	-	-	-	4.26	4.32	4.38	4.42	4.39	4.08
55	-	-	-	-	4.75	4.83	4.89	4.91	4.70
60	-	-	-	-	-	5.34	5.43	5.47	5.36
Mass flow in kg/h									
5	31	39	47	57	69	82	-	-	-
15	30	38	47	57	68	81	96	113	-
20	30	37	46	56	68	81	96	113	-
30	28	36	45	55	66	80	95	112	152
40	-	34	43	53	64	78	93	109	150
50	-	-	-	50	62	75	90	107	147
55	-	-	-	-	60	73	88	105	145
60	-	-	-	-	-	71	86	103	143
Coefficient of performance (C.O.P.)									
5	3.44	4.41	5.83	8.13	12.49	23.96	-	-	-
15	2.55	3.18	3.99	5.10	6.73	9.37	14.44	28.17	-
20	2.20	2.73	3.39	4.24	5.40	7.11	9.89	15.25	-
30	1.60	2.00	2.47	3.02	3.71	4.61	5.84	7.66	16.35
40	-	1.41	1.76	2.15	2.61	3.16	3.86	4.77	7.86
50	-	-	-	1.47	1.79	2.17	2.61	3.15	4.71
55	-	-	-	-	1.46	1.77	2.13	2.56	3.74
60	-	-	-	-	-	1.42	1.72	2.06	2.98

Nominal performance at to = 5 °C, tc = 50 °C

Cooling capacity	3 689	W
Power input	1 414	W
Current consumption	4.42	A
Mass flow	90	kg/h
C.O.P.	2.61	

to: Evaporating temperature at dew point

tc: Condensing temperature at dew point

Rating conditions : Superheat = 10 K , Subcooling = 0 K

Pressure switch settings

Maximum HP switch setting	43.8	bar(g)
Minimum LP switch setting	1	bar(g)
LP pump down setting	1.2	bar(g)

Sound power data

Sound power level	dB(A)
With accoustic hood	dB(A)

Tolerance according EN12900

Danfoss can accept no responsibility for possible errors in catalogues, brochures and other printed material. Danfoss reserves the right to alter its products without notice. This also applies to products already on order provided that such alternations can be made without subsequential changes being necessary in specifications already agreed. All trademarks in this material are property of the respective companies. Danfoss and the Danfoss logotype are trademarks of Danfoss A/S. All rights reserved.

Performance data at 30 Hz, ARI rating conditions

R410A

Cond. temp. in °C (tc)	Evaporating temperature in °C (to)								
	-25	-20	-15	-10	-5	0	5	10	20
Cooling capacity in W									
5	1 957	2 443	3 019	3 694	4 476	5 375	-	-	-
15	1 773	2 238	2 784	3 422	4 160	5 008	5 974	7 067	-
20	1 674	2 125	2 655	3 273	3 986	4 806	5 740	6 798	-
30	1 461	1 883	2 375	2 948	3 609	4 369	5 236	6 219	8 570
40	-	1 621	2 071	2 593	3 196	3 891	4 685	5 588	7 756
50	-	-	-	2 211	2 752	3 376	4 091	4 909	6 884
55	-	-	-	-	2 519	3 105	3 780	4 553	6 427
60	-	-	-	-	-	2 828	3 460	4 186	5 957
Power input in W									
5	538	525	491	431	340	213	-	-	-
15	652	661	656	632	583	504	390	237	-
20	710	728	734	724	693	635	545	419	-
30	844	871	894	907	904	882	835	757	489
40	-	1 049	1 079	1 107	1 125	1 130	1 116	1 078	910
50	-	-	-	1 348	1 379	1 403	1 414	1 408	1 322
55	-	-	-	-	1 525	1 556	1 576	1 583	1 531
60	-	-	-	-	-	1 723	1 751	1 768	1 748
Current consumption in A									
5	2.08	2.01	1.92	1.79	1.58	1.28	-	-	-
15	2.49	2.45	2.41	2.34	2.23	2.04	1.75	1.34	-
20	2.67	2.64	2.62	2.58	2.51	2.37	2.14	1.80	-
30	3.07	3.04	3.05	3.05	3.04	2.99	2.87	2.65	1.82
40	-	3.54	3.55	3.58	3.62	3.63	3.59	3.48	2.93
50	-	-	-	4.26	4.32	4.38	4.42	4.39	4.08
55	-	-	-	-	4.75	4.83	4.89	4.91	4.70
60	-	-	-	-	-	5.34	5.43	5.47	5.36
Mass flow in kg/h									
5	31	39	47	57	68	81	-	-	-
15	30	38	46	56	68	81	96	112	-
20	30	37	46	56	67	80	95	112	-
30	28	36	44	54	66	79	94	111	151
40	-	34	42	52	64	77	92	109	149
50	-	-	-	50	61	74	89	106	146
55	-	-	-	-	60	73	87	104	144
60	-	-	-	-	-	71	86	102	142
Coefficient of performance (C.O.P.)									
5	3.64	4.66	6.15	8.58	13.17	25.25	-	-	-
15	2.72	3.38	4.24	5.42	7.14	9.94	15.30	29.85	-
20	2.36	2.92	3.62	4.52	5.76	7.57	10.53	16.22	-
30	1.73	2.16	2.66	3.25	3.99	4.95	6.27	8.22	17.52
40	-	1.55	1.92	2.34	2.84	3.44	4.20	5.18	8.52
50	-	-	-	1.64	2.00	2.41	2.89	3.49	5.21
55	-	-	-	-	1.65	2.00	2.40	2.88	4.20
60	-	-	-	-	-	1.64	1.98	2.37	3.41

Nominal performance at to = 7.2 °C, tc = 54.4 °C

Cooling capacity	4 148	W
Power input	1 560	W
Current consumption	4.84	A
Mass flow	95	kg/h
C.O.P.	2.66	

Pressure switch settings

Maximum HP switch setting	43.8	bar(g)
Minimum LP switch setting	1	bar(g)
LP pump down setting	1.2	bar(g)

Sound power data

Sound power level	dB(A)
With accoustic hood	dB(A)

to: Evaporating temperature at dew point
tc: Condensing temperature at dew point
Rating conditions : Superheat = 11.1 K , Subcooling = 8.3 K

Tolerance according EN12900

Danfoss can accept no responsibility for possible errors in catalogues, brochures and other printed material. Danfoss reserves the right to alter its products without notice.
This also applies to products already on order provided that such alternations can be made without subsequential changes being necessary in specifications already agreed.
All trademarks in this material are property of the respective companies. Danfoss and the Danfoss logotype are trademarks of Danfoss A/S. All rights reserved.

Performance data at 35 Hz, EN 12900 rating conditions

R410A

Cond. temp. in °C (tc)	Evaporating temperature in °C (to)								
	-25	-20	-15	-10	-5	0	5	10	20
Cooling capacity in W									
5	2 176	2 719	3 363	4 119	4 997	6 008	-	-	-
15	1 960	2 472	3 076	3 783	4 603	5 546	6 623	7 844	-
20	1 846	2 340	2 922	3 603	4 391	5 298	6 334	7 510	-
30	1 607	2 062	2 596	3 218	3 940	4 770	5 721	6 800	9 391
40	-	1 767	2 246	2 805	3 453	4 201	5 059	6 036	8 392
50	-	-	-	2 362	2 931	3 589	4 346	5 214	7 317
55	-	-	-	-	2 654	3 263	3 967	4 775	6 744
60	-	-	-	-	-	2 920	3 566	4 311	6 134
Power input in W									
5	613	599	561	490	380	224	-	-	-
15	746	758	754	728	672	579	441	250	-
20	814	834	844	835	801	735	628	474	-
30	973	1 000	1 026	1 043	1 044	1 022	970	879	555
40	-	1 209	1 239	1 270	1 294	1 304	1 293	1 253	1 059
50	-	-	-	1 545	1 580	1 609	1 627	1 626	1 537
55	-	-	-	-	1 746	1 781	1 809	1 822	1 777
60	-	-	-	-	-	1 970	2 005	2 030	2 021
Current consumption in A									
5	2.29	2.21	2.10	1.94	1.70	1.36	-	-	-
15	2.75	2.71	2.66	2.59	2.46	2.25	1.92	1.45	-
20	2.96	2.93	2.90	2.86	2.78	2.62	2.37	1.98	-
30	3.40	3.36	3.37	3.38	3.38	3.32	3.19	2.95	2.06
40	-	3.90	3.91	3.95	4.00	4.02	3.99	3.88	3.31
50	-	-	-	4.69	4.77	4.85	4.90	4.89	4.60
55	-	-	-	-	5.24	5.34	5.42	5.45	5.29
60	-	-	-	-	-	5.90	6.00	6.08	6.02
Mass flow in kg/h									
5	37	46	56	67	81	96	-	-	-
15	36	45	55	67	80	96	113	133	-
20	35	44	54	66	79	95	113	133	-
30	34	42	53	64	78	93	111	131	179
40	-	40	51	62	76	91	109	128	176
50	-	-	-	60	73	88	106	125	173
55	-	-	-	-	71	87	104	124	171
60	-	-	-	-	-	85	102	122	169
Coefficient of performance (C.O.P.)									
5	3.55	4.54	6.00	8.40	13.14	26.87	-	-	-
15	2.63	3.26	4.08	5.19	6.85	9.58	15.03	31.33	-
20	2.27	2.81	3.46	4.31	5.48	7.21	10.08	15.83	-
30	1.65	2.06	2.53	3.09	3.77	4.67	5.90	7.73	16.91
40	-	1.46	1.81	2.21	2.67	3.22	3.91	4.82	7.92
50	-	-	-	1.53	1.86	2.23	2.67	3.21	4.76
55	-	-	-	-	1.52	1.83	2.19	2.62	3.80
60	-	-	-	-	-	1.48	1.78	2.12	3.03

Nominal performance at to = 5 °C, tc = 50 °C

Cooling capacity	4 346	W
Power input	1 627	W
Current consumption	4.90	A
Mass flow	106	kg/h
C.O.P.	2.67	

to: Evaporating temperature at dew point
tc: Condensing temperature at dew point
Rating conditions : Superheat = 10 K , Subcooling = 0 K

Pressure switch settings

Maximum HP switch setting	43.8	bar(g)
Minimum LP switch setting	1	bar(g)
LP pump down setting	1.2	bar(g)

Sound power data

Sound power level	dB(A)
With accoustic hood	dB(A)

Tolerance according EN12900

Danfoss can accept no responsibility for possible errors in catalogues, brochures and other printed material. Danfoss reserves the right to alter its products without notice.
This also applies to products already on order provided that such alternations can be made without subsequential changes being necessary in specifications already agreed.
All trademarks in this material are property of the respective companies. Danfoss and the Danfoss logotype are trademarks of Danfoss A/S. All rights reserved.

Performance data at 35 Hz, ARI rating conditions

R410A

Cond. temp. in °C (tc)	Evaporating temperature in °C (to)								
	-25	-20	-15	-10	-5	0	5	10	20
Cooling capacity in W									
5	2 301	2 873	3 551	4 347	5 270	6 333	-	-	-
15	2 087	2 630	3 270	4 018	4 885	5 883	7 020	8 309	-
20	1 973	2 500	3 119	3 841	4 679	5 641	6 740	7 985	-
30	1 736	2 225	2 798	3 465	4 238	5 127	6 143	7 297	10 063
40	-	1 933	2 454	3 061	3 764	4 574	5 503	6 560	9 104
50	-	-	-	2 631	3 259	3 985	4 820	5 775	8 088
55	-	-	-	-	2 996	3 678	4 465	5 366	7 559
60	-	-	-	-	-	3 363	4 100	4 947	7 017
Power input in W									
5	613	599	561	490	380	224	-	-	-
15	746	758	754	728	672	579	441	250	-
20	814	834	844	835	801	735	628	474	-
30	973	1 000	1 026	1 043	1 044	1 022	970	879	555
40	-	1 209	1 239	1 270	1 294	1 304	1 293	1 253	1 059
50	-	-	-	1 545	1 580	1 609	1 627	1 626	1 537
55	-	-	-	-	1 746	1 781	1 809	1 822	1 777
60	-	-	-	-	-	1 970	2 005	2 030	2 021
Current consumption in A									
5	2.29	2.21	2.10	1.94	1.70	1.36	-	-	-
15	2.75	2.71	2.66	2.59	2.46	2.25	1.92	1.45	-
20	2.96	2.93	2.90	2.86	2.78	2.62	2.37	1.98	-
30	3.40	3.36	3.37	3.38	3.38	3.32	3.19	2.95	2.06
40	-	3.90	3.91	3.95	4.00	4.02	3.99	3.88	3.31
50	-	-	-	4.69	4.77	4.85	4.90	4.89	4.60
55	-	-	-	-	5.24	5.34	5.42	5.45	5.29
60	-	-	-	-	-	5.90	6.00	6.08	6.02
Mass flow in kg/h									
5	37	45	55	67	80	96	-	-	-
15	36	44	55	66	80	95	112	132	-
20	35	44	54	66	79	94	112	132	-
30	33	42	52	64	77	93	110	130	177
40	-	40	50	62	75	91	108	128	175
50	-	-	-	59	73	88	105	125	171
55	-	-	-	-	71	86	103	123	169
60	-	-	-	-	-	84	101	121	167
Coefficient of performance (C.O.P.)									
5	3.75	4.79	6.33	8.87	13.86	28.32	-	-	-
15	2.80	3.47	4.33	5.52	7.27	10.16	15.93	33.19	-
20	2.42	3.00	3.70	4.60	5.84	7.68	10.73	16.84	-
30	1.78	2.22	2.73	3.32	4.06	5.01	6.33	8.30	18.12
40	-	1.60	1.98	2.41	2.91	3.51	4.26	5.23	8.60
50	-	-	-	1.70	2.06	2.48	2.96	3.55	5.26
55	-	-	-	-	1.72	2.07	2.47	2.94	4.25
60	-	-	-	-	-	1.71	2.04	2.44	3.47

Nominal performance at to = 7.2 °C, tc = 54.4 °C

Cooling capacity	4 892	W
Power input	1 794	W
Current consumption	5.37	A
Mass flow	112	kg/h
C.O.P.	2.73	

Pressure switch settings

Maximum HP switch setting	43.8	bar(g)
Minimum LP switch setting	1	bar(g)
LP pump down setting	1.2	bar(g)

Sound power data

Sound power level	dB(A)
With accoustic hood	dB(A)

to: Evaporating temperature at dew point

tc: Condensing temperature at dew point

Rating conditions : Superheat = 11.1 K , Subcooling = 8.3 K

Tolerance according EN12900

Danfoss can accept no responsibility for possible errors in catalogues, brochures and other printed material. Danfoss reserves the right to alter its products without notice.
This also applies to products already on order provided that such alternations can be made without subsequential changes being necessary in specifications already agreed.
All trademarks in this material are property of the respective companies. Danfoss and the Danfoss logotype are trademarks of Danfoss A/S. All rights reserved.

Performance data at 40 Hz, EN 12900 rating conditions

R410A

Cond. temp. in °C (tc)	Evaporating temperature in °C (to)								
	-30	-20	-15	-10	-5	0	5	10	20
Cooling capacity in W									
5	1 983	3 124	3 864	4 734	5 745	6 909	-	-	-
15	1 763	2 839	3 531	4 342	5 283	6 366	7 604	9 009	-
20	1 650	2 690	3 356	4 135	5 038	6 079	7 269	8 620	-
30	1 421	2 379	2 987	3 698	4 523	5 475	6 564	7 802	10 777
40	-	2 051	2 597	3 234	3 974	4 829	5 810	6 930	9 632
50	-	-	2 183	2 739	3 387	4 138	5 004	5 996	8 406
60	-	-	-	-	2 748	3 385	4 123	4 974	7 061
65	-	-	-	-	2 392	2 962	3 627	4 397	6 297
Power input in W									
5	687	678	636	555	427	243	-	-	-
15	822	859	857	830	767	659	498	274	-
20	897	945	958	951	914	839	717	537	-
30	1 088	1 134	1 163	1 185	1 189	1 167	1 110	1 007	630
40	-	1 373	1 403	1 438	1 467	1 482	1 473	1 432	1 213
50	-	-	1 717	1 747	1 785	1 821	1 845	1 849	1 756
60	-	-	-	-	2 181	2 222	2 263	2 295	2 297
65	-	-	-	-	2 420	2 457	2 500	2 541	2 577
Current consumption in A									
5	2.59	2.41	2.29	2.11	1.83	1.44	-	-	-
15	3.09	2.98	2.93	2.85	2.70	2.46	2.09	1.57	-
20	3.32	3.22	3.20	3.16	3.06	2.89	2.61	2.18	-
30	3.83	3.70	3.71	3.73	3.72	3.67	3.53	3.27	2.31
40	-	4.29	4.30	4.35	4.41	4.44	4.42	4.31	3.71
50	-	-	5.09	5.15	5.24	5.33	5.40	5.41	5.14
60	-	-	-	-	6.35	6.48	6.61	6.71	6.70
65	-	-	-	-	7.05	7.18	7.33	7.47	7.58
Mass flow in kg/h									
5	34	52	64	78	93	111	-	-	-
15	33	51	63	76	92	110	130	153	-
20	32	51	62	76	91	109	129	152	-
30	30	49	61	74	89	107	127	150	205
40	-	47	58	72	87	105	125	148	202
50	-	-	56	69	84	102	122	144	198
60	-	-	-	-	81	98	118	141	194
65	-	-	-	-	79	97	116	138	192
Coefficient of performance (C.O.P.)									
5	2.89	4.61	6.08	8.53	13.45	28.48	-	-	-
15	2.15	3.31	4.12	5.23	6.89	9.66	15.27	32.90	-
20	1.84	2.85	3.50	4.35	5.51	7.24	10.14	16.05	-
30	1.31	2.10	2.57	3.12	3.80	4.69	5.92	7.75	17.10
40	-	1.49	1.85	2.25	2.71	3.26	3.94	4.84	7.94
50	-	-	1.27	1.57	1.90	2.27	2.71	3.24	4.79
60	-	-	-	-	1.26	1.52	1.82	2.17	3.07
65	-	-	-	-	0.99	1.21	1.45	1.73	2.44

Nominal performance at to = 5 °C, tc = 50 °C

Cooling capacity	5 004	W
Power input	1 845	W
Current consumption	5.40	A
Mass flow	122	kg/h
C.O.P.	2.71	

to: Evaporating temperature at dew point

tc: Condensing temperature at dew point

Rating conditions : Superheat = 10 K , Subcooling = 0 K

Pressure switch settings

Maximum HP switch setting	43.8	bar(g)
Minimum LP switch setting	1	bar(g)
LP pump down setting	1.2	bar(g)

Sound power data

Sound power level	dB(A)
With accoustic hood	dB(A)

Tolerance according EN12900

Danfoss can accept no responsibility for possible errors in catalogues, brochures and other printed material. Danfoss reserves the right to alter its products without notice.
This also applies to products already on order provided that such alternations can be made without subsequential changes being necessary in specifications already agreed.
All trademarks in this material are property of the respective companies. Danfoss and the Danfoss logotype are trademarks of Danfoss A/S. All rights reserved.

Performance data at 40 Hz, ARI rating conditions

R410A

Cond. temp. in °C (tc)	Evaporating temperature in °C (to)								
	-30	-20	-15	-10	-5	0	5	10	20
Cooling capacity in W									
5	2 098	3 301	4 080	4 995	6 058	7 282	-	-	-
15	1 878	3 020	3 754	4 612	5 607	6 753	8 061	9 544	-
20	1 766	2 873	3 581	4 409	5 368	6 473	7 734	9 166	-
30	1 536	2 566	3 220	3 982	4 866	5 884	7 049	8 373	11 548
40	-	2 244	2 837	3 529	4 331	5 258	6 320	7 531	10 449
50	-	-	2 435	3 050	3 766	4 595	5 550	6 642	9 292
60	-	-	-	-	3 173	3 899	4 740	5 708	8 078
65	-	-	-	-	2 866	3 538	4 320	5 225	7 451
Power input in W									
5	687	678	636	555	427	243	-	-	-
15	822	859	857	830	767	659	498	274	-
20	897	945	958	951	914	839	717	537	-
30	1 088	1 134	1 163	1 185	1 189	1 167	1 110	1 007	630
40	-	1 373	1 403	1 438	1 467	1 482	1 473	1 432	1 213
50	-	-	1 717	1 747	1 785	1 821	1 845	1 849	1 756
60	-	-	-	-	2 181	2 222	2 263	2 295	2 297
65	-	-	-	-	2 420	2 457	2 500	2 541	2 577
Current consumption in A									
5	2.59	2.41	2.29	2.11	1.83	1.44	-	-	-
15	3.09	2.98	2.93	2.85	2.70	2.46	2.09	1.57	-
20	3.32	3.22	3.20	3.16	3.06	2.89	2.61	2.18	-
30	3.83	3.70	3.71	3.73	3.72	3.67	3.53	3.27	2.31
40	-	4.29	4.30	4.35	4.41	4.44	4.42	4.31	3.71
50	-	-	5.09	5.15	5.24	5.33	5.40	5.41	5.14
60	-	-	-	-	6.35	6.48	6.61	6.71	6.70
65	-	-	-	-	7.05	7.18	7.33	7.47	7.58
Mass flow in kg/h									
5	34	52	64	77	92	110	-	-	-
15	32	51	63	76	91	109	129	152	-
20	32	50	62	75	91	108	128	151	-
30	30	49	60	74	89	106	126	149	203
40	-	47	58	71	87	104	124	146	200
50	-	-	56	69	84	101	121	143	197
60	-	-	-	-	81	98	117	140	193
65	-	-	-	-	79	96	115	137	190
Coefficient of performance (C.O.P.)									
5	3.06	4.87	6.42	9.00	14.18	30.01	-	-	-
15	2.29	3.52	4.38	5.56	7.31	10.24	16.18	34.86	-
20	1.97	3.04	3.74	4.64	5.87	7.71	10.79	17.06	-
30	1.41	2.26	2.77	3.36	4.09	5.04	6.35	8.31	18.33
40	-	1.63	2.02	2.45	2.95	3.55	4.29	5.26	8.61
50	-	-	1.42	1.75	2.11	2.52	3.01	3.59	5.29
60	-	-	-	-	1.45	1.75	2.09	2.49	3.52
65	-	-	-	-	1.18	1.44	1.73	2.06	2.89

Nominal performance at to = 7.2 °C, tc = 54.4 °C

Cooling capacity	5 638	W
Power input	2 032	W
Current consumption	5.93	A
Mass flow	129	kg/h
C.O.P.	2.77	

to: Evaporating temperature at dew point

tc: Condensing temperature at dew point

Rating conditions : Superheat = 11.1 K , Subcooling = 8.3 K

Pressure switch settings

Maximum HP switch setting	43.8	bar(g)
Minimum LP switch setting	1	bar(g)
LP pump down setting	1.2	bar(g)

Sound power data

Sound power level	dB(A)
With accoustic hood	dB(A)

Tolerance according EN12900

Danfoss can accept no responsibility for possible errors in catalogues, brochures and other printed material. Danfoss reserves the right to alter its products without notice. This also applies to products already on order provided that such alternations can be made without subsequential changes being necessary in specifications already agreed. All trademarks in this material are property of the respective companies. Danfoss and the Danfoss logotype are trademarks of Danfoss A/S. All rights reserved.

Performance data at 45 Hz, EN 12900 rating conditions

R410A

Cond. temp. in °C (tc)	Evaporating temperature in °C (to)								
	-30	-20	-15	-10	-5	0	5	10	20
Cooling capacity in W									
5	2 240	3 527	4 363	5 344	6 486	7 802	-	-	-
15	1 995	3 206	3 985	4 898	5 959	7 182	8 579	10 165	-
20	1 871	3 039	3 788	4 665	5 683	6 857	8 199	9 724	-
30	1 620	2 695	3 378	4 178	5 106	6 177	7 405	8 801	12 158
40	-	2 334	2 946	3 662	4 494	5 456	6 561	7 823	10 869
50	-	-	2 490	3 114	3 842	4 687	5 662	6 780	9 496
60	-	-	-	-	3 134	3 849	4 680	5 639	7 991
65	-	-	-	-	2 737	3 378	4 127	4 994	7 135
Power input in W									
5	768	762	715	625	480	270	-	-	-
15	921	965	965	935	866	745	563	307	-
20	1 007	1 061	1 077	1 071	1 032	949	812	608	-
30	1 226	1 272	1 305	1 331	1 338	1 316	1 254	1 140	714
40	-	1 541	1 573	1 611	1 645	1 665	1 658	1 615	1 373
50	-	-	1 923	1 954	1 996	2 038	2 068	2 075	1 978
60	-	-	-	-	2 434	2 479	2 526	2 565	2 574
65	-	-	-	-	2 699	2 738	2 786	2 834	2 882
Current consumption in A									
5	2.80	2.63	2.49	2.29	1.98	1.53	-	-	-
15	3.36	3.26	3.21	3.12	2.96	2.69	2.28	1.70	-
20	3.62	3.52	3.50	3.46	3.36	3.17	2.86	2.39	-
30	4.17	4.05	4.07	4.09	4.09	4.03	3.88	3.61	2.57
40	-	4.69	4.71	4.77	4.84	4.88	4.86	4.75	4.13
50	-	-	5.57	5.63	5.74	5.85	5.93	5.95	5.69
60	-	-	-	-	6.94	7.09	7.24	7.36	7.39
65	-	-	-	-	7.70	7.85	8.02	8.18	8.34
Mass flow in kg/h									
5	38	59	72	88	105	125	-	-	-
15	37	58	71	86	104	124	147	173	-
20	36	57	70	85	103	123	146	172	-
30	34	55	68	84	101	121	144	169	231
40	-	53	66	81	99	118	141	167	228
50	-	-	64	79	96	115	138	163	224
60	-	-	-	-	93	112	134	159	220
65	-	-	-	-	91	110	132	157	217
Coefficient of performance (C.O.P.)									
5	2.92	4.63	6.10	8.55	13.50	28.90	-	-	-
15	2.17	3.32	4.13	5.24	6.88	9.63	15.25	33.11	-
20	1.86	2.86	3.52	4.36	5.51	7.22	10.10	16.00	-
30	1.32	2.12	2.59	3.14	3.82	4.69	5.91	7.72	17.03
40	-	1.51	1.87	2.27	2.73	3.28	3.96	4.84	7.92
50	-	-	1.29	1.59	1.92	2.30	2.74	3.27	4.80
60	-	-	-	-	1.29	1.55	1.85	2.20	3.10
65	-	-	-	-	1.01	1.23	1.48	1.76	2.48

Nominal performance at to = 5 °C, tc = 50 °C

Cooling capacity	5 662	W
Power input	2 068	W
Current consumption	5.93	A
Mass flow	138	kg/h
C.O.P.	2.74	

Pressure switch settings

Maximum HP switch setting	43.8	bar(g)
Minimum LP switch setting	1	bar(g)
LP pump down setting	1.2	bar(g)

Sound power data

Sound power level	dB(A)
With accoustic hood	dB(A)

to: Evaporating temperature at dew point
tc: Condensing temperature at dew point
Rating conditions : Superheat = 10 K , Subcooling = 0 K

Tolerance according EN12900

Danfoss can accept no responsibility for possible errors in catalogues, brochures and other printed material. Danfoss reserves the right to alter its products without notice.
This also applies to products already on order provided that such alternations can be made without subsequential changes being necessary in specifications already agreed.
All trademarks in this material are property of the respective companies. Danfoss and the Danfoss logotype are trademarks of Danfoss A/S. All rights reserved.

Performance data at 45 Hz, ARI rating conditions

R410A

Cond. temp. in °C (tc)	Evaporating temperature in °C (to)								
	-30	-20	-15	-10	-5	0	5	10	20
Cooling capacity in W									
5	2 370	3 727	4 607	5 640	6 841	8 223	-	-	-
15	2 126	3 410	4 236	5 203	6 325	7 618	9 094	10 769	-
20	2 002	3 246	4 043	4 974	6 056	7 301	8 724	10 340	-
30	1 752	2 907	3 641	4 498	5 493	6 639	7 952	9 444	13 028
40	-	2 553	3 219	3 996	4 898	5 941	7 137	8 501	11 791
50	-	-	2 778	3 469	4 273	5 205	6 279	7 510	10 496
60	-	-	-	-	3 617	4 434	5 380	6 471	9 141
65	-	-	-	-	3 278	4 035	4 915	5 934	8 442
Power input in W									
5	768	762	715	625	480	270	-	-	-
15	921	965	965	935	866	745	563	307	-
20	1 007	1 061	1 077	1 071	1 032	949	812	608	-
30	1 226	1 272	1 305	1 331	1 338	1 316	1 254	1 140	714
40	-	1 541	1 573	1 611	1 645	1 665	1 658	1 615	1 373
50	-	-	1 923	1 954	1 996	2 038	2 068	2 075	1 978
60	-	-	-	-	2 434	2 479	2 526	2 565	2 574
65	-	-	-	-	2 699	2 738	2 786	2 834	2 882
Current consumption in A									
5	2.80	2.63	2.49	2.29	1.98	1.53	-	-	-
15	3.36	3.26	3.21	3.12	2.96	2.69	2.28	1.70	-
20	3.62	3.52	3.50	3.46	3.36	3.17	2.86	2.39	-
30	4.17	4.05	4.07	4.09	4.09	4.03	3.88	3.61	2.57
40	-	4.69	4.71	4.77	4.84	4.88	4.86	4.75	4.13
50	-	-	5.57	5.63	5.74	5.85	5.93	5.95	5.69
60	-	-	-	-	6.94	7.09	7.24	7.36	7.39
65	-	-	-	-	7.70	7.85	8.02	8.18	8.34
Mass flow in kg/h									
5	38	59	72	87	104	124	-	-	-
15	37	58	71	86	103	123	146	171	-
20	36	57	70	85	102	122	145	170	-
30	34	55	68	83	100	120	143	168	229
40	-	53	66	81	98	118	140	165	226
50	-	-	63	78	95	115	137	162	222
60	-	-	-	-	92	111	133	158	218
65	-	-	-	-	90	109	131	156	216
Coefficient of performance (C.O.P.)									
5	3.09	4.89	6.44	9.02	14.24	30.46	-	-	-
15	2.31	3.54	4.39	5.56	7.30	10.22	16.16	35.08	-
20	1.99	3.06	3.75	4.64	5.87	7.69	10.75	17.01	-
30	1.43	2.29	2.79	3.38	4.10	5.04	6.34	8.29	18.25
40	-	1.66	2.05	2.48	2.98	3.57	4.30	5.27	8.59
50	-	-	1.44	1.77	2.14	2.55	3.04	3.62	5.31
60	-	-	-	-	1.49	1.79	2.13	2.52	3.55
65	-	-	-	-	1.21	1.47	1.76	2.09	2.93

Nominal performance at to = 7.2 °C, tc = 54.4 °C

Cooling capacity	6 384	W
Power input	2 274	W
Current consumption	6.51	A
Mass flow	146	kg/h
C.O.P.	2.81	

Pressure switch settings

Maximum HP switch setting	43.8	bar(g)
Minimum LP switch setting	1	bar(g)
LP pump down setting	1.2	bar(g)

Sound power data

Sound power level	dB(A)
With accoustic hood	dB(A)

to: Evaporating temperature at dew point
tc: Condensing temperature at dew point
Rating conditions : Superheat = 11.1 K , Subcooling = 8.3 K

Tolerance according EN12900

Danfoss can accept no responsibility for possible errors in catalogues, brochures and other printed material. Danfoss reserves the right to alter its products without notice.
This also applies to products already on order provided that such alternations can be made without subsequential changes being necessary in specifications already agreed.
All trademarks in this material are property of the respective companies. Danfoss and the Danfoss logotype are trademarks of Danfoss A/S. All rights reserved.

Performance data at 50 Hz, EN 12900 rating conditions

R410A

Cond. temp. in °C (tc)	Evaporating temperature in °C (to)								
	-30	-20	-15	-10	-5	0	5	10	20
Cooling capacity in W									
5	2 497	3 928	4 858	5 951	7 222	8 687	-	-	-
15	2 227	3 571	4 437	5 453	6 633	7 993	9 548	11 314	-
20	2 092	3 388	4 220	5 194	6 326	7 632	9 125	10 822	-
30	1 819	3 010	3 769	4 657	5 688	6 879	8 243	9 797	13 532
40	-	2 616	3 296	4 090	5 014	6 083	7 312	8 715	12 104
50	-	-	2 795	3 489	4 298	5 237	6 320	7 563	10 585
60	-	-	-	-	3 518	4 314	5 238	6 304	8 922
65	-	-	-	-	3 079	3 793	4 626	5 591	7 974
Power input in W									
5	854	850	800	700	540	306	-	-	-
15	1 024	1 075	1 076	1 046	970	837	635	350	-
20	1 120	1 182	1 201	1 196	1 155	1 064	912	686	-
30	1 365	1 414	1 452	1 482	1 492	1 470	1 402	1 278	806
40	-	1 712	1 746	1 789	1 829	1 852	1 847	1 801	1 537
50	-	-	2 132	2 166	2 213	2 260	2 295	2 305	2 203
60	-	-	-	-	2 692	2 740	2 793	2 838	2 854
65	-	-	-	-	2 982	3 023	3 076	3 130	3 189
Current consumption in A									
5	3.02	2.85	2.71	2.48	2.13	1.63	-	-	-
15	3.63	3.54	3.50	3.40	3.22	2.92	2.47	1.84	-
20	3.91	3.84	3.82	3.78	3.67	3.46	3.12	2.61	-
30	4.51	4.41	4.44	4.47	4.48	4.42	4.26	3.96	2.84
40	-	5.10	5.14	5.21	5.29	5.34	5.33	5.22	4.56
50	-	-	6.07	6.15	6.27	6.39	6.49	6.52	6.27
60	-	-	-	-	7.56	7.72	7.89	8.04	8.10
65	-	-	-	-	8.38	8.54	8.74	8.92	9.12
Mass flow in kg/h									
5	43	66	81	97	117	139	-	-	-
15	41	65	79	96	115	138	163	192	-
20	40	64	78	95	115	137	162	191	-
30	39	62	76	93	112	135	160	189	257
40	-	60	74	91	110	132	157	186	254
50	-	-	72	88	107	129	154	182	250
60	-	-	-	-	104	125	150	178	245
65	-	-	-	-	102	124	148	176	243
Coefficient of performance (C.O.P.)									
5	2.92	4.62	6.08	8.50	13.38	28.42	-	-	-
15	2.17	3.32	4.12	5.21	6.84	9.55	15.05	32.33	-
20	1.87	2.87	3.51	4.34	5.48	7.17	10.00	15.77	-
30	1.33	2.13	2.60	3.14	3.81	4.68	5.88	7.67	16.79
40	-	1.53	1.89	2.29	2.74	3.28	3.96	4.84	7.88
50	-	-	1.31	1.61	1.94	2.32	2.75	3.28	4.80
60	-	-	-	-	1.31	1.57	1.88	2.22	3.13
65	-	-	-	-	1.03	1.25	1.50	1.79	2.50

Nominal performance at to = 5 °C, tc = 50 °C

Cooling capacity	6 320	W
Power input	2 295	W
Current consumption	6.49	A
Mass flow	154	kg/h
C.O.P.	2.75	

Pressure switch settings

Maximum HP switch setting	43.8	bar(g)
Minimum LP switch setting	1	bar(g)
LP pump down setting	1.2	bar(g)

Sound power data

Sound power level	dB(A)
With accoustic hood	dB(A)

to: Evaporating temperature at dew point
tc: Condensing temperature at dew point
Rating conditions : Superheat = 10 K , Subcooling = 0 K

Tolerance according EN12900

Danfoss can accept no responsibility for possible errors in catalogues, brochures and other printed material. Danfoss reserves the right to alter its products without notice.
This also applies to products already on order provided that such alternations can be made without subsequential changes being necessary in specifications already agreed.
All trademarks in this material are property of the respective companies. Danfoss and the Danfoss logotype are trademarks of Danfoss A/S. All rights reserved.

Performance data at 50 Hz, ARI rating conditions

R410A

Cond. temp. in °C (tc)	Evaporating temperature in °C (to)								
	-30	-20	-15	-10	-5	0	5	10	20
Cooling capacity in W									
5	2 642	4 151	5 130	6 280	7 617	9 156	-	-	-
15	2 373	3 799	4 717	5 792	7 040	8 478	10 121	11 986	-
20	2 238	3 618	4 503	5 539	6 741	8 126	9 709	11 507	-
30	1 966	3 247	4 062	5 014	6 119	7 393	8 853	10 513	14 500
40	-	2 862	3 601	4 463	5 465	6 623	7 953	9 470	13 131
50	-	-	3 119	3 886	4 780	5 816	7 010	8 378	11 699
60	-	-	-	-	4 061	4 969	6 021	7 235	10 206
65	-	-	-	-	3 689	4 531	5 510	6 644	9 436
Power input in W									
5	854	850	800	700	540	306	-	-	-
15	1 024	1 075	1 076	1 046	970	837	635	350	-
20	1 120	1 182	1 201	1 196	1 155	1 064	912	686	-
30	1 365	1 414	1 452	1 482	1 492	1 470	1 402	1 278	806
40	-	1 712	1 746	1 789	1 829	1 852	1 847	1 801	1 537
50	-	-	2 132	2 166	2 213	2 260	2 295	2 305	2 203
60	-	-	-	-	2 692	2 740	2 793	2 838	2 854
65	-	-	-	-	2 982	3 023	3 076	3 130	3 189
Current consumption in A									
5	3.02	2.85	2.71	2.48	2.13	1.63	-	-	-
15	3.63	3.54	3.50	3.40	3.22	2.92	2.47	1.84	-
20	3.91	3.84	3.82	3.78	3.67	3.46	3.12	2.61	-
30	4.51	4.41	4.44	4.47	4.48	4.42	4.26	3.96	2.84
40	-	5.10	5.14	5.21	5.29	5.34	5.33	5.22	4.56
50	-	-	6.07	6.15	6.27	6.39	6.49	6.52	6.27
60	-	-	-	-	7.56	7.72	7.89	8.04	8.10
65	-	-	-	-	8.38	8.54	8.74	8.92	9.12
Mass flow in kg/h									
5	42	66	80	97	116	139	-	-	-
15	41	64	79	95	115	137	162	191	-
20	40	63	78	95	114	136	161	190	-
30	38	62	76	93	112	134	159	187	255
40	-	59	74	90	109	131	156	184	252
50	-	-	71	88	106	128	153	181	248
60	-	-	-	-	103	125	149	177	243
65	-	-	-	-	101	123	147	175	241
Coefficient of performance (C.O.P.)									
5	3.09	4.88	6.41	8.97	14.11	29.96	-	-	-
15	2.32	3.53	4.38	5.54	7.26	10.13	15.95	34.25	-
20	2.00	3.06	3.75	4.63	5.84	7.64	10.65	16.77	-
30	1.44	2.30	2.80	3.38	4.10	5.03	6.31	8.23	17.99
40	-	1.67	2.06	2.49	2.99	3.58	4.31	5.26	8.54
50	-	-	1.46	1.79	2.16	2.57	3.05	3.63	5.31
60	-	-	-	-	1.51	1.81	2.16	2.55	3.58
65	-	-	-	-	1.24	1.50	1.79	2.12	2.96

Nominal performance at to = 7.2 °C, tc = 54.4 °C

Cooling capacity	7 131	W
Power input	2 520	W
Current consumption	7.11	A
Mass flow	163	kg/h
C.O.P.	2.83	

Pressure switch settings

Maximum HP switch setting	43.8	bar(g)
Minimum LP switch setting	1	bar(g)
LP pump down setting	1.2	bar(g)

Sound power data

Sound power level	dB(A)
With accoustic hood	dB(A)

to: Evaporating temperature at dew point

tc: Condensing temperature at dew point

Rating conditions : Superheat = 11.1 K , Subcooling = 8.3 K

Tolerance according EN12900

Danfoss can accept no responsibility for possible errors in catalogues, brochures and other printed material. Danfoss reserves the right to alter its products without notice.
This also applies to products already on order provided that such alternations can be made without subsequential changes being necessary in specifications already agreed.
All trademarks in this material are property of the respective companies. Danfoss and the Danfoss logotype are trademarks of Danfoss A/S. All rights reserved.

Performance data at 55 Hz, EN 12900 rating conditions

R410A

Cond. temp. in °C (tc)	Evaporating temperature in °C (to)								
	-30	-20	-15	-10	-5	0	5	10	20
Cooling capacity in W									
5	2 753	4 328	5 350	6 553	7 952	9 565	-	-	-
15	2 458	3 936	4 888	6 005	7 303	8 800	10 511	12 455	-
20	2 311	3 736	4 650	5 722	6 967	8 403	10 046	11 913	-
30	2 016	3 325	4 159	5 135	6 269	7 579	9 080	10 790	14 901
40	-	2 897	3 644	4 518	5 534	6 710	8 062	9 605	13 336
50	-	-	3 100	3 863	4 753	5 786	6 979	8 347	11 674
60	-	-	-	-	3 901	4 778	5 796	6 971	9 854
65	-	-	-	-	3 421	4 208	5 126	6 190	8 816
Power input in W									
5	944	942	889	781	606	350	-	-	-
15	1 131	1 190	1 193	1 161	1 079	935	714	403	-
20	1 237	1 307	1 329	1 325	1 281	1 184	1 019	772	-
30	1 505	1 561	1 604	1 638	1 651	1 628	1 556	1 421	907
40	-	1 887	1 925	1 973	2 017	2 045	2 041	1 992	1 706
50	-	-	2 345	2 382	2 434	2 486	2 526	2 539	2 431
60	-	-	-	-	2 954	3 007	3 065	3 115	3 136
65	-	-	-	-	3 268	3 313	3 371	3 431	3 498
Current consumption in A									
5	3.25	3.08	2.93	2.68	2.29	1.74	-	-	-
15	3.90	3.84	3.80	3.69	3.50	3.17	2.68	1.98	-
20	4.20	4.16	4.16	4.11	4.00	3.77	3.39	2.83	-
30	4.85	4.79	4.83	4.87	4.88	4.82	4.65	4.33	3.12
40	-	5.54	5.59	5.68	5.77	5.83	5.82	5.70	5.01
50	-	-	6.60	6.69	6.82	6.96	7.07	7.11	6.86
60	-	-	-	-	8.21	8.39	8.58	8.74	8.83
65	-	-	-	-	9.08	9.27	9.48	9.68	9.92
Mass flow in kg/h									
5	47	73	89	107	129	154	-	-	-
15	45	71	87	106	127	152	180	212	-
20	45	70	86	105	126	151	179	210	-
30	43	68	84	103	124	148	176	208	283
40	-	66	82	100	121	146	173	204	280
50	-	-	79	98	118	142	170	201	275
60	-	-	-	-	115	139	166	197	271
65	-	-	-	-	113	137	164	195	268
Coefficient of performance (C.O.P.)									
5	2.92	4.59	6.02	8.39	13.13	27.35	-	-	-
15	2.17	3.31	4.10	5.17	6.77	9.41	14.73	30.93	-
20	1.87	2.86	3.50	4.32	5.44	7.10	9.86	15.43	-
30	1.34	2.13	2.59	3.13	3.80	4.66	5.84	7.60	16.42
40	-	1.54	1.89	2.29	2.74	3.28	3.95	4.82	7.82
50	-	-	1.32	1.62	1.95	2.33	2.76	3.29	4.80
60	-	-	-	-	1.32	1.59	1.89	2.24	3.14
65	-	-	-	-	1.05	1.27	1.52	1.80	2.52

Nominal performance at to = 5 °C, tc = 50 °C

Cooling capacity	6 979	W
Power input	2 526	W
Current consumption	7.07	A
Mass flow	170	kg/h
C.O.P.	2.76	

Pressure switch settings

Maximum HP switch setting	43.8	bar(g)
Minimum LP switch setting	1	bar(g)
LP pump down setting	1.2	bar(g)

Sound power data

Sound power level	dB(A)
With accoustic hood	dB(A)

to: Evaporating temperature at dew point
tc: Condensing temperature at dew point
Rating conditions : Superheat = 10 K , Subcooling = 0 K

Tolerance according EN12900

Danfoss can accept no responsibility for possible errors in catalogues, brochures and other printed material. Danfoss reserves the right to alter its products without notice.
This also applies to products already on order provided that such alternations can be made without subsequential changes being necessary in specifications already agreed.
All trademarks in this material are property of the respective companies. Danfoss and the Danfoss logotype are trademarks of Danfoss A/S. All rights reserved.

Performance data at 55 Hz, ARI rating conditions

R410A

Cond. temp. in °C (tc)	Evaporating temperature in °C (to)								
	-30	-20	-15	-10	-5	0	5	10	20
Cooling capacity in W									
5	2 913	4 573	5 650	6 915	8 387	10 081	-	-	-
15	2 619	4 187	5 196	6 378	7 752	9 334	11 142	13 194	-
20	2 473	3 990	4 963	6 101	7 424	8 947	10 689	12 668	-
30	2 179	3 587	4 482	5 529	6 744	8 146	9 751	11 578	15 967
40	-	3 169	3 982	4 930	6 032	7 306	8 769	10 438	14 467
50	-	-	3 458	4 303	5 286	6 426	7 740	9 246	12 903
60	-	-	-	-	4 504	5 504	6 663	7 999	11 273
65	-	-	-	-	4 098	5 026	6 106	7 355	10 432
Power input in W									
5	944	942	889	781	606	350	-	-	-
15	1 131	1 190	1 193	1 161	1 079	935	714	403	-
20	1 237	1 307	1 329	1 325	1 281	1 184	1 019	772	-
30	1 505	1 561	1 604	1 638	1 651	1 628	1 556	1 421	907
40	-	1 887	1 925	1 973	2 017	2 045	2 041	1 992	1 706
50	-	-	2 345	2 382	2 434	2 486	2 526	2 539	2 431
60	-	-	-	-	2 954	3 007	3 065	3 115	3 136
65	-	-	-	-	3 268	3 313	3 371	3 431	3 498
Current consumption in A									
5	3.25	3.08	2.93	2.68	2.29	1.74	-	-	-
15	3.90	3.84	3.80	3.69	3.50	3.17	2.68	1.98	-
20	4.20	4.16	4.16	4.11	4.00	3.77	3.39	2.83	-
30	4.85	4.79	4.83	4.87	4.88	4.82	4.65	4.33	3.12
40	-	5.54	5.59	5.68	5.77	5.83	5.82	5.70	5.01
50	-	-	6.60	6.69	6.82	6.96	7.07	7.11	6.86
60	-	-	-	-	8.21	8.39	8.58	8.74	8.83
65	-	-	-	-	9.08	9.27	9.48	9.68	9.92
Mass flow in kg/h									
5	47	72	88	107	128	153	-	-	-
15	45	71	87	105	126	151	179	210	-
20	44	70	86	104	125	150	177	209	-
30	42	68	84	102	123	147	175	206	281
40	-	66	82	100	121	145	172	203	277
50	-	-	79	97	118	142	169	199	273
60	-	-	-	-	114	138	165	196	269
65	-	-	-	-	113	136	163	193	266
Coefficient of performance (C.O.P.)									
5	3.09	4.85	6.36	8.86	13.84	28.83	-	-	-
15	2.32	3.52	4.36	5.50	7.18	9.99	15.61	32.76	-
20	2.00	3.05	3.73	4.60	5.79	7.56	10.49	16.40	-
30	1.45	2.30	2.79	3.37	4.08	5.00	6.27	8.15	17.60
40	-	1.68	2.07	2.50	2.99	3.57	4.30	5.24	8.48
50	-	-	1.47	1.81	2.17	2.58	3.06	3.64	5.31
60	-	-	-	-	1.52	1.83	2.17	2.57	3.59
65	-	-	-	-	1.25	1.52	1.81	2.14	2.98

Nominal performance at to = 7.2 °C, tc = 54.4 °C

Cooling capacity	7 879	W
Power input	2 771	W
Current consumption	7.74	A
Mass flow	180	kg/h
C.O.P.	2.84	

to: Evaporating temperature at dew point

tc: Condensing temperature at dew point

Rating conditions : Superheat = 11.1 K , Subcooling = 8.3 K

Pressure switch settings

Maximum HP switch setting	43.8	bar(g)
Minimum LP switch setting	1	bar(g)
LP pump down setting	1.2	bar(g)

Sound power data

Sound power level	dB(A)
With accoustic hood	dB(A)

Tolerance according EN12900

Danfoss can accept no responsibility for possible errors in catalogues, brochures and other printed material. Danfoss reserves the right to alter its products without notice.
This also applies to products already on order provided that such alternations can be made without subsequential changes being necessary in specifications already agreed.
All trademarks in this material are property of the respective companies. Danfoss and the Danfoss logotype are trademarks of Danfoss A/S. All rights reserved.

Performance data at 60 Hz, EN 12900 rating conditions

R410A

Cond. temp. in °C (tc)	Evaporating temperature in °C (to)								
	-30	-20	-15	-10	-5	0	5	10	20
Cooling capacity in W									
5	3 009	4 725	5 840	7 151	8 676	10 435	-	-	-
15	2 689	4 300	5 338	6 555	7 970	9 602	11 468	13 587	-
20	2 530	4 083	5 080	6 248	7 606	9 171	10 963	12 999	-
30	2 212	3 639	4 549	5 613	6 850	8 278	9 915	11 779	16 264
40	-	3 177	3 992	4 945	6 054	7 337	8 811	10 495	14 565
50	-	2 690	3 403	4 236	5 208	6 336	7 638	9 132	12 763
60	-	-	-	3 462	4 283	5 242	6 354	7 638	10 788
65	-	-	-	-	3 761	4 622	5 626	6 789	9 660
Power input in W									
5	1 038	1 039	982	867	678	402	-	-	-
15	1 241	1 309	1 314	1 280	1 193	1 038	800	465	-
20	1 356	1 436	1 462	1 459	1 413	1 308	1 131	866	-
30	1 647	1 713	1 761	1 799	1 814	1 790	1 713	1 569	1 017
40	-	2 065	2 108	2 162	2 211	2 241	2 238	2 187	1 880
50	-	2 549	2 561	2 603	2 661	2 718	2 762	2 777	2 662
60	-	-	-	3 182	3 220	3 278	3 342	3 397	3 421
65	-	-	-	-	3 558	3 607	3 671	3 736	3 809
Current consumption in A									
5	3.48	3.32	3.16	2.89	2.47	1.86	-	-	-
15	4.17	4.15	4.11	4.00	3.79	3.43	2.90	2.14	-
20	4.50	4.49	4.50	4.46	4.33	4.09	3.68	3.07	-
30	5.20	5.18	5.24	5.29	5.30	5.24	5.06	4.72	3.42
40	-	5.99	6.06	6.16	6.27	6.34	6.33	6.21	5.48
50	-	7.12	7.15	7.25	7.40	7.56	7.68	7.73	7.47
60	-	-	-	8.74	8.89	9.08	9.28	9.46	9.57
65	-	-	-	-	9.82	10.01	10.24	10.46	10.73
Mass flow in kg/h									
5	51	79	97	117	141	168	-	-	-
15	50	78	95	115	139	166	196	231	-
20	49	77	94	114	138	164	195	230	-
30	47	75	92	112	135	162	192	227	309
40	-	73	90	110	133	159	189	223	305
50	-	70	87	107	130	156	186	220	301
60	-	-	-	104	127	153	182	216	297
65	-	-	-	-	125	151	180	214	294
Coefficient of performance (C.O.P.)									
5	2.90	4.55	5.95	8.25	12.80	25.96	-	-	-
15	2.17	3.29	4.06	5.12	6.68	9.25	14.33	29.20	-
20	1.87	2.84	3.47	4.28	5.38	7.01	9.69	15.01	-
30	1.34	2.13	2.58	3.12	3.78	4.62	5.79	7.51	15.99
40	-	1.54	1.89	2.29	2.74	3.27	3.94	4.80	7.75
50	-	1.06	1.33	1.63	1.96	2.33	2.77	3.29	4.79
60	-	-	-	1.09	1.33	1.60	1.90	2.25	3.15
65	-	-	-	-	1.06	1.28	1.53	1.82	2.54

Nominal performance at to = 5 °C, tc = 50 °C

Cooling capacity	7 638	W
Power input	2 762	W
Current consumption	7.68	A
Mass flow	186	kg/h
C.O.P.	2.77	

to: Evaporating temperature at dew point

tc: Condensing temperature at dew point

Rating conditions : Superheat = 10 K , Subcooling = 0 K

Pressure switch settings

Maximum HP switch setting	43.8	bar(g)
Minimum LP switch setting	1	bar(g)
LP pump down setting	1.2	bar(g)

Sound power data

Sound power level	77	dB(A)
With accoustic hood	70	dB(A)

Tolerance according EN12900

Danfoss can accept no responsibility for possible errors in catalogues, brochures and other printed material. Danfoss reserves the right to alter its products without notice. This also applies to products already on order provided that such alternations can be made without subsequential changes being necessary in specifications already agreed. All trademarks in this material are property of the respective companies. Danfoss and the Danfoss logotype are trademarks of Danfoss A/S. All rights reserved.

Performance data at 60 Hz, ARI rating conditions

R410A

Cond. temp. in °C (tc)	Evaporating temperature in °C (to)								
	-30	-20	-15	-10	-5	0	5	10	20
Cooling capacity in W									
5	3 183	4 992	6 167	7 546	9 150	10 999	-	-	-
15	2 865	4 574	5 674	6 963	8 460	10 185	12 156	14 394	-
20	2 707	4 361	5 421	6 662	8 104	9 765	11 664	13 822	-
30	2 391	3 926	4 902	6 043	7 368	8 897	10 647	12 640	17 427
40	-	3 476	4 362	5 396	6 599	7 988	9 584	11 405	15 801
50	-	3 007	3 796	4 719	5 792	7 037	8 471	10 115	14 107
60	-	-	-	4 006	4 945	6 038	7 305	8 765	12 341
65	-	-	-	-	4 505	5 520	6 701	8 067	11 431
Power input in W									
5	1 038	1 039	982	867	678	402	-	-	-
15	1 241	1 309	1 314	1 280	1 193	1 038	800	465	-
20	1 356	1 436	1 462	1 459	1 413	1 308	1 131	866	-
30	1 647	1 713	1 761	1 799	1 814	1 790	1 713	1 569	1 017
40	-	2 065	2 108	2 162	2 211	2 241	2 238	2 187	1 880
50	-	2 549	2 561	2 603	2 661	2 718	2 762	2 777	2 662
60	-	-	-	3 182	3 220	3 278	3 342	3 397	3 421
65	-	-	-	-	3 558	3 607	3 671	3 736	3 809
Current consumption in A									
5	3.48	3.32	3.16	2.89	2.47	1.86	-	-	-
15	4.17	4.15	4.11	4.00	3.79	3.43	2.90	2.14	-
20	4.50	4.49	4.50	4.46	4.33	4.09	3.68	3.07	-
30	5.20	5.18	5.24	5.29	5.30	5.24	5.06	4.72	3.42
40	-	5.99	6.06	6.16	6.27	6.34	6.33	6.21	5.48
50	-	7.12	7.15	7.25	7.40	7.56	7.68	7.73	7.47
60	-	-	-	8.74	8.89	9.08	9.28	9.46	9.57
65	-	-	-	-	9.82	10.01	10.24	10.46	10.73
Mass flow in kg/h									
5	51	79	96	116	140	166	-	-	-
15	49	77	95	115	138	164	195	229	-
20	49	76	94	114	137	163	194	228	-
30	47	74	92	112	135	161	191	225	307
40	-	72	89	109	132	158	188	222	303
50	-	70	87	106	129	155	185	218	299
60	-	-	-	103	126	151	181	214	294
65	-	-	-	-	124	150	179	212	292
Coefficient of performance (C.O.P.)									
5	3.07	4.80	6.28	8.71	13.50	27.36	-	-	-
15	2.31	3.49	4.32	5.44	7.09	9.81	15.19	30.93	-
20	2.00	3.04	3.71	4.56	5.74	7.46	10.31	15.96	-
30	1.45	2.29	2.78	3.36	4.06	4.97	6.21	8.06	17.13
40	-	1.68	2.07	2.50	2.98	3.56	4.28	5.22	8.40
50	-	1.18	1.48	1.81	2.18	2.59	3.07	3.64	5.30
60	-	-	-	1.26	1.54	1.84	2.19	2.58	3.61
65	-	-	-	-	1.27	1.53	1.83	2.16	3.00

Nominal performance at to = 7.2 °C, tc = 54.4 °C

Cooling capacity	8 627	W
Power input	3 026	W
Current consumption	8.40	A
Mass flow	197	kg/h
C.O.P.	2.85	

Pressure switch settings

Maximum HP switch setting	43.8	bar(g)
Minimum LP switch setting	1	bar(g)
LP pump down setting	1.2	bar(g)

Sound power data

Sound power level	77	dB(A)
With accoustic hood	70	dB(A)

to: Evaporating temperature at dew point

tc: Condensing temperature at dew point

Rating conditions : Superheat = 11.1 K , Subcooling = 8.3 K

Tolerance according EN12900

Danfoss can accept no responsibility for possible errors in catalogues, brochures and other printed material. Danfoss reserves the right to alter its products without notice. This also applies to products already on order provided that such alternations can be made without subsequential changes being necessary in specifications already agreed. All trademarks in this material are property of the respective companies. Danfoss and the Danfoss logotype are trademarks of Danfoss A/S. All rights reserved.

Performance data at 65 Hz, EN 12900 rating conditions

R410A

Cond. temp. in °C (tc)	Evaporating temperature in °C (to)								
	-30	-20	-15	-10	-5	0	5	10	20
Cooling capacity in W									
5	3 263	5 120	6 327	7 745	9 395	11 297	-	-	-
15	2 920	4 663	5 786	7 103	8 634	10 399	12 419	14 712	-
20	2 749	4 430	5 509	6 773	8 242	9 936	11 874	14 078	-
30	2 407	3 953	4 938	6 090	7 429	8 975	10 747	12 766	17 620
40	-	3 456	4 340	5 372	6 574	7 963	9 560	11 385	15 793
50	-	2 931	3 705	4 609	5 663	6 886	8 298	9 916	13 852
60	-	-	-	3 773	4 665	5 706	6 913	8 307	11 724
65	-	-	-	-	4 099	5 035	6 126	7 390	10 505
Power input in W									
5	1 136	1 141	1 080	957	757	463	-	-	-
15	1 356	1 433	1 439	1 404	1 312	1 147	894	538	-
20	1 479	1 571	1 600	1 598	1 549	1 438	1 249	968	-
30	1 790	1 869	1 922	1 965	1 982	1 957	1 876	1 722	1 136
40	-	2 246	2 296	2 356	2 410	2 443	2 440	2 385	2 060
50	-	2 764	2 781	2 829	2 892	2 955	3 002	3 018	2 897
60	-	-	-	3 447	3 491	3 554	3 623	3 682	3 707
65	-	-	-	-	3 852	3 906	3 975	4 044	4 122
Current consumption in A									
5	3.71	3.58	3.40	3.11	2.65	1.99	-	-	-
15	4.45	4.46	4.43	4.32	4.09	3.70	3.12	2.31	-
20	4.79	4.84	4.85	4.82	4.68	4.42	3.98	3.33	-
30	5.55	5.58	5.66	5.73	5.75	5.68	5.48	5.12	3.73
40	-	6.46	6.55	6.67	6.79	6.87	6.86	6.74	5.96
50	-	7.68	7.72	7.85	8.01	8.18	8.31	8.37	8.10
60	-	-	-	9.43	9.59	9.80	10.02	10.21	10.33
65	-	-	-	-	10.58	10.79	11.03	11.26	11.55
Mass flow in kg/h									
5	56	86	105	127	152	181	-	-	-
15	54	84	103	125	150	179	212	250	-
20	53	83	102	124	149	178	211	249	-
30	51	81	100	122	147	176	208	246	335
40	-	79	98	119	144	173	205	242	331
50	-	76	95	116	141	170	202	239	327
60	-	-	-	113	138	166	198	235	322
65	-	-	-	-	136	164	196	233	320
Coefficient of performance (C.O.P.)									
5	2.87	4.49	5.86	8.09	12.42	24.42	-	-	-
15	2.15	3.25	4.02	5.06	6.58	9.07	13.90	27.36	-
20	1.86	2.82	3.44	4.24	5.32	6.91	9.51	14.55	-
30	1.34	2.12	2.57	3.10	3.75	4.59	5.73	7.41	15.51
40	-	1.54	1.89	2.28	2.73	3.26	3.92	4.77	7.67
50	-	1.06	1.33	1.63	1.96	2.33	2.76	3.29	4.78
60	-	-	-	1.09	1.34	1.61	1.91	2.26	3.16
65	-	-	-	-	1.06	1.29	1.54	1.83	2.55

Nominal performance at to = 5 °C, tc = 50 °C

Cooling capacity	8 298	W
Power input	3 002	W
Current consumption	8.31	A
Mass flow	202	kg/h
C.O.P.	2.76	

Pressure switch settings

Maximum HP switch setting	43.8	bar(g)
Minimum LP switch setting	1	bar(g)
LP pump down setting	1.2	bar(g)

Sound power data

Sound power level	dB(A)
With accoustic hood	dB(A)

to: Evaporating temperature at dew point
tc: Condensing temperature at dew point
Rating conditions : Superheat = 10 K , Subcooling = 0 K

Tolerance according EN12900

Danfoss can accept no responsibility for possible errors in catalogues, brochures and other printed material. Danfoss reserves the right to alter its products without notice.
This also applies to products already on order provided that such alternations can be made without subsequential changes being necessary in specifications already agreed.
All trademarks in this material are property of the respective companies. Danfoss and the Danfoss logotype are trademarks of Danfoss A/S. All rights reserved.

Performance data at 65 Hz, ARI rating conditions

R410A

Cond. temp. in °C (tc)	Evaporating temperature in °C (to)								
	-30	-20	-15	-10	-5	0	5	10	20
Cooling capacity in W									
5	3 452	5 410	6 680	8 173	9 908	11 908	-	-	-
15	3 111	4 960	6 150	7 545	9 165	11 031	13 164	15 585	-
20	2 941	4 732	5 879	7 222	8 782	10 579	12 635	14 969	-
30	2 602	4 265	5 322	6 557	7 992	9 646	11 542	13 699	18 881
40	-	3 781	4 741	5 863	7 165	8 671	10 399	12 372	17 133
50	-	3 276	4 133	5 133	6 298	7 647	9 203	10 984	15 311
60	-	-	-	4 365	5 385	6 572	7 948	9 532	13 412
65	-	-	-	-	4 910	6 014	7 297	8 780	12 431
Power input in W									
5	1 136	1 141	1 080	957	757	463	-	-	-
15	1 356	1 433	1 439	1 404	1 312	1 147	894	538	-
20	1 479	1 571	1 600	1 598	1 549	1 438	1 249	968	-
30	1 790	1 869	1 922	1 965	1 982	1 957	1 876	1 722	1 136
40	-	2 246	2 296	2 356	2 410	2 443	2 440	2 385	2 060
50	-	2 764	2 781	2 829	2 892	2 955	3 002	3 018	2 897
60	-	-	-	3 447	3 491	3 554	3 623	3 682	3 707
65	-	-	-	-	3 852	3 906	3 975	4 044	4 122
Current consumption in A									
5	3.71	3.58	3.40	3.11	2.65	1.99	-	-	-
15	4.45	4.46	4.43	4.32	4.09	3.70	3.12	2.31	-
20	4.79	4.84	4.85	4.82	4.68	4.42	3.98	3.33	-
30	5.55	5.58	5.66	5.73	5.75	5.68	5.48	5.12	3.73
40	-	6.46	6.55	6.67	6.79	6.87	6.86	6.74	5.96
50	-	7.68	7.72	7.85	8.01	8.18	8.31	8.37	8.10
60	-	-	-	9.43	9.59	9.80	10.02	10.21	10.33
65	-	-	-	-	10.58	10.79	11.03	11.26	11.55
Mass flow in kg/h									
5	55	85	104	126	151	180	-	-	-
15	54	84	103	124	149	178	211	248	-
20	53	83	102	123	148	177	210	247	-
30	51	81	99	121	146	174	207	244	332
40	-	78	97	119	143	172	204	241	328
50	-	76	94	116	140	168	201	237	324
60	-	-	-	112	137	165	197	233	320
65	-	-	-	-	135	163	195	231	317
Coefficient of performance (C.O.P.)									
5	3.04	4.74	6.18	8.54	13.10	25.74	-	-	-
15	2.29	3.46	4.27	5.37	6.99	9.62	14.73	28.99	-
20	1.99	3.01	3.67	4.52	5.67	7.36	10.11	15.47	-
30	1.45	2.28	2.77	3.34	4.03	4.93	6.15	7.96	16.62
40	-	1.68	2.07	2.49	2.97	3.55	4.26	5.19	8.32
50	-	1.19	1.49	1.81	2.18	2.59	3.07	3.64	5.29
60	-	-	-	1.27	1.54	1.85	2.19	2.59	3.62
65	-	-	-	-	1.27	1.54	1.84	2.17	3.02

Nominal performance at to = 7.2 °C, tc = 54.4 °C

Cooling capacity	9 376	W
Power input	3 285	W
Current consumption	9.08	A
Mass flow	214	kg/h
C.O.P.	2.85	

Pressure switch settings

Maximum HP switch setting	43.8	bar(g)
Minimum LP switch setting	1	bar(g)
LP pump down setting	1.2	bar(g)

Sound power data

Sound power level	dB(A)
With accoustic hood	dB(A)

to: Evaporating temperature at dew point
tc: Condensing temperature at dew point
Rating conditions : Superheat = 11.1 K , Subcooling = 8.3 K

Tolerance according EN12900

Danfoss can accept no responsibility for possible errors in catalogues, brochures and other printed material. Danfoss reserves the right to alter its products without notice.
This also applies to products already on order provided that such alternations can be made without subsequential changes being necessary in specifications already agreed.
All trademarks in this material are property of the respective companies. Danfoss and the Danfoss logotype are trademarks of Danfoss A/S. All rights reserved.

Performance data at 70 Hz, EN 12900 rating conditions

R410A

Cond. temp. in °C (tc)	Evaporating temperature in °C (to)								
	-30	-20	-15	-10	-5	0	5	10	20
Cooling capacity in W									
5	3 517	5 514	6 810	8 334	10 108	12 152	-	-	-
15	3 150	5 025	6 233	7 649	9 295	11 192	13 363	15 828	-
20	2 967	4 777	5 937	7 296	8 876	10 697	12 782	15 151	-
30	2 601	4 267	5 327	6 567	8 008	9 671	11 578	13 749	18 971
40	-	3 734	4 687	5 799	7 093	8 590	10 309	12 273	17 017
50	-	3 169	4 005	4 981	6 118	7 437	8 958	10 702	14 942
60	-	-	-	4 081	5 045	6 169	7 473	8 976	12 661
65	-	-	-	-	4 436	5 448	6 627	7 991	11 353
Power input in W									
5	1 238	1 247	1 183	1 053	841	532	-	-	-
15	1 474	1 561	1 569	1 533	1 435	1 261	995	620	-
20	1 605	1 710	1 743	1 741	1 690	1 572	1 373	1 077	-
30	1 934	2 029	2 089	2 136	2 155	2 129	2 042	1 880	1 263
40	-	2 431	2 488	2 555	2 613	2 649	2 646	2 588	2 244
50	-	2 979	3 004	3 060	3 129	3 197	3 247	3 264	3 134
60	-	-	-	3 715	3 766	3 836	3 910	3 971	3 996
65	-	-	-	-	4 149	4 209	4 284	4 357	4 437
Current consumption in A									
5	3.94	3.84	3.66	3.34	2.84	2.13	-	-	-
15	4.72	4.78	4.76	4.64	4.40	3.99	3.36	2.48	-
20	5.09	5.19	5.22	5.19	5.05	4.76	4.29	3.59	-
30	5.91	5.99	6.10	6.18	6.21	6.13	5.92	5.53	4.05
40	-	6.95	7.06	7.21	7.34	7.43	7.42	7.28	6.45
50	-	8.26	8.32	8.47	8.65	8.83	8.97	9.03	8.74
60	-	-	-	10.15	10.33	10.55	10.78	10.98	11.11
65	-	-	-	-	11.37	11.59	11.84	12.09	12.38
Mass flow in kg/h									
5	60	93	113	137	164	195	-	-	-
15	58	91	111	135	162	193	228	269	-
20	57	90	110	134	161	192	227	267	-
30	55	88	108	131	158	189	224	265	361
40	-	85	105	129	156	186	221	261	357
50	-	82	103	126	153	183	218	258	353
60	-	-	-	122	149	179	214	254	348
65	-	-	-	-	147	177	212	251	346
Coefficient of performance (C.O.P.)									
5	2.84	4.42	5.76	7.91	12.01	22.86	-	-	-
15	2.14	3.22	3.97	4.99	6.48	8.88	13.44	25.54	-
20	1.85	2.79	3.41	4.19	5.25	6.80	9.31	14.07	-
30	1.34	2.10	2.55	3.07	3.72	4.54	5.67	7.31	15.02
40	-	1.54	1.88	2.27	2.71	3.24	3.90	4.74	7.58
50	-	1.06	1.33	1.63	1.96	2.33	2.76	3.28	4.77
60	-	-	-	1.10	1.34	1.61	1.91	2.26	3.17
65	-	-	-	-	1.07	1.29	1.55	1.83	2.56

Nominal performance at to = 5 °C, tc = 50 °C

Cooling capacity	8 958	W
Power input	3 247	W
Current consumption	8.97	A
Mass flow	218	kg/h
C.O.P.	2.76	

to: Evaporating temperature at dew point

tc: Condensing temperature at dew point

Rating conditions : Superheat = 10 K , Subcooling = 0 K

Pressure switch settings

Maximum HP switch setting	43.8	bar(g)
Minimum LP switch setting	1	bar(g)
LP pump down setting	1.2	bar(g)

Sound power data

Sound power level	dB(A)
With accoustic hood	dB(A)

Tolerance according EN12900

Danfoss can accept no responsibility for possible errors in catalogues, brochures and other printed material. Danfoss reserves the right to alter its products without notice.
This also applies to products already on order provided that such alternations can be made without subsequential changes being necessary in specifications already agreed.
All trademarks in this material are property of the respective companies. Danfoss and the Danfoss logotype are trademarks of Danfoss A/S. All rights reserved.

Performance data at 70 Hz, ARI rating conditions

R410A

Cond. temp. in °C (tc)	Evaporating temperature in °C (to)								
	-30	-20	-15	-10	-5	0	5	10	20
Cooling capacity in W									
5	3 721	5 826	7 191	8 795	10 660	12 808	-	-	-
15	3 356	5 345	6 625	8 124	9 866	11 872	14 165	16 768	-
20	3 175	5 102	6 336	7 780	9 457	11 390	13 600	16 110	-
30	2 812	4 603	5 741	7 071	8 614	10 394	12 433	14 754	20 328
40	-	4 085	5 120	6 328	7 732	9 353	11 213	13 337	18 461
50	-	3 542	4 468	5 548	6 804	8 258	9 935	11 854	16 515
60	-	-	-	4 723	5 825	7 107	8 591	10 300	14 483
65	-	-	-	-	5 314	6 507	7 893	9 495	13 434
Power input in W									
5	1 238	1 247	1 183	1 053	841	532	-	-	-
15	1 474	1 561	1 569	1 533	1 435	1 261	995	620	-
20	1 605	1 710	1 743	1 741	1 690	1 572	1 373	1 077	-
30	1 934	2 029	2 089	2 136	2 155	2 129	2 042	1 880	1 263
40	-	2 431	2 488	2 555	2 613	2 649	2 646	2 588	2 244
50	-	2 979	3 004	3 060	3 129	3 197	3 247	3 264	3 134
60	-	-	-	3 715	3 766	3 836	3 910	3 971	3 996
65	-	-	-	-	4 149	4 209	4 284	4 357	4 437
Current consumption in A									
5	3.94	3.84	3.66	3.34	2.84	2.13	-	-	-
15	4.72	4.78	4.76	4.64	4.40	3.99	3.36	2.48	-
20	5.09	5.19	5.22	5.19	5.05	4.76	4.29	3.59	-
30	5.91	5.99	6.10	6.18	6.21	6.13	5.92	5.53	4.05
40	-	6.95	7.06	7.21	7.34	7.43	7.42	7.28	6.45
50	-	8.26	8.32	8.47	8.65	8.83	8.97	9.03	8.74
60	-	-	-	10.15	10.33	10.55	10.78	10.98	11.11
65	-	-	-	-	11.37	11.59	11.84	12.09	12.38
Mass flow in kg/h									
5	60	92	112	136	163	194	-	-	-
15	58	90	110	134	161	192	227	267	-
20	57	89	109	133	160	190	226	266	-
30	55	87	107	131	157	188	223	263	358
40	-	85	105	128	155	185	220	259	354
50	-	82	102	125	152	182	217	256	350
60	-	-	-	122	148	178	213	252	345
65	-	-	-	-	146	176	211	250	343
Coefficient of performance (C.O.P.)									
5	3.00	4.67	6.08	8.35	12.67	24.10	-	-	-
15	2.28	3.42	4.22	5.30	6.87	9.41	14.24	27.05	-
20	1.98	2.98	3.64	4.47	5.60	7.24	9.90	14.96	-
30	1.45	2.27	2.75	3.31	4.00	4.88	6.09	7.85	16.09
40	-	1.68	2.06	2.48	2.96	3.53	4.24	5.15	8.23
50	-	1.19	1.49	1.81	2.17	2.58	3.06	3.63	5.27
60	-	-	-	1.27	1.55	1.85	2.20	2.59	3.62
65	-	-	-	-	1.28	1.55	1.84	2.18	3.03

Nominal performance at to = 7.2 °C, tc = 54.4 °C

Cooling capacity	10 126	W
Power input	3 549	W
Current consumption	9.79	A
Mass flow	232	kg/h
C.O.P.	2.85	

to: Evaporating temperature at dew point

tc: Condensing temperature at dew point

Rating conditions : Superheat = 11.1 K , Subcooling = 8.3 K

Pressure switch settings

Maximum HP switch setting	43.8	bar(g)
Minimum LP switch setting	1	bar(g)
LP pump down setting	1.2	bar(g)

Sound power data

Sound power level	dB(A)
With accoustic hood	dB(A)

Tolerance according EN12900

Danfoss can accept no responsibility for possible errors in catalogues, brochures and other printed material. Danfoss reserves the right to alter its products without notice. This also applies to products already on order provided that such alternations can be made without subsequential changes being necessary in specifications already agreed. All trademarks in this material are property of the respective companies. Danfoss and the Danfoss logotype are trademarks of Danfoss A/S. All rights reserved.

Performance data at 75 Hz, EN 12900 rating conditions

R410A

Cond. temp. in °C (tc)	Evaporating temperature in °C (to)								
	-30	-20	-15	-10	-5	0	5	10	20
Cooling capacity in W									
5	3 770	5 905	7 291	8 920	10 815	12 999	-	-	-
15	3 379	5 386	6 678	8 192	9 952	11 981	14 301	16 937	-
20	3 185	5 122	6 364	7 818	9 508	11 455	13 685	16 218	-
30	2 793	4 580	5 716	7 043	8 586	10 366	12 406	14 729	20 316
40	-	4 011	5 033	6 226	7 613	9 216	11 057	13 160	18 239
50	-	3 406	4 304	5 352	6 572	7 987	9 618	11 488	16 031
60	-	-	-	4 388	5 425	6 633	8 033	9 646	13 599
65	-	-	-	-	4 771	5 860	7 127	8 593	12 202
Power input in W									
5	1 345	1 357	1 291	1 155	933	609	-	-	-
15	1 595	1 694	1 704	1 666	1 563	1 381	1 103	712	-
20	1 734	1 854	1 890	1 889	1 835	1 712	1 504	1 194	-
30	2 079	2 194	2 261	2 312	2 332	2 305	2 214	2 043	1 400
40	-	2 619	2 686	2 759	2 822	2 860	2 856	2 794	2 433
50	-	3 195	3 231	3 295	3 371	3 444	3 496	3 513	3 374
60	-	-	-	3 987	4 045	4 122	4 200	4 265	4 287
65	-	-	-	-	4 450	4 517	4 597	4 674	4 754
Current consumption in A									
5	4.18	4.11	3.92	3.58	3.05	2.28	-	-	-
15	5.00	5.11	5.10	4.98	4.73	4.28	3.61	2.67	-
20	5.39	5.55	5.60	5.57	5.43	5.12	4.61	3.86	-
30	6.27	6.42	6.55	6.65	6.68	6.61	6.38	5.97	4.39
40	-	7.46	7.60	7.76	7.91	8.01	8.00	7.85	6.97
50	-	8.86	8.95	9.11	9.32	9.51	9.66	9.72	9.40
60	-	-	-	10.90	11.09	11.33	11.57	11.78	11.90
65	-	-	-	-	12.19	12.42	12.68	12.94	13.23
Mass flow in kg/h									
5	64	99	121	146	175	209	-	-	-
15	62	97	119	144	173	207	245	288	-
20	61	96	118	143	172	205	243	286	-
30	59	94	116	141	170	203	241	283	386
40	-	92	113	138	167	200	238	280	382
50	-	89	110	135	164	197	234	277	378
60	-	-	-	132	160	193	230	273	374
65	-	-	-	-	158	191	228	270	371
Coefficient of performance (C.O.P.)									
5	2.80	4.35	5.65	7.73	11.60	21.35	-	-	-
15	2.12	3.18	3.92	4.92	6.37	8.68	12.97	23.80	-
20	1.84	2.76	3.37	4.14	5.18	6.69	9.10	13.58	-
30	1.34	2.09	2.53	3.05	3.68	4.50	5.60	7.21	14.52
40	-	1.53	1.87	2.26	2.70	3.22	3.87	4.71	7.50
50	-	1.07	1.33	1.62	1.95	2.32	2.75	3.27	4.75
60	-	-	-	1.10	1.34	1.61	1.91	2.26	3.17
65	-	-	-	-	1.07	1.30	1.55	1.84	2.57

Nominal performance at to = 5 °C, tc = 50 °C

Cooling capacity	9 618	W
Power input	3 496	W
Current consumption	9.66	A
Mass flow	234	kg/h
C.O.P.	2.75	

to: Evaporating temperature at dew point
tc: Condensing temperature at dew point
Rating conditions : Superheat = 10 K , Subcooling = 0 K

Pressure switch settings

Maximum HP switch setting	43.8	bar(g)
Minimum LP switch setting	1	bar(g)
LP pump down setting	1.2	bar(g)

Sound power data

Sound power level	dB(A)
With accoustic hood	dB(A)

Tolerance according EN12900

Danfoss can accept no responsibility for possible errors in catalogues, brochures and other printed material. Danfoss reserves the right to alter its products without notice.
This also applies to products already on order provided that such alternations can be made without subsequential changes being necessary in specifications already agreed.
All trademarks in this material are property of the respective companies. Danfoss and the Danfoss logotype are trademarks of Danfoss A/S. All rights reserved.

Performance data at 75 Hz, ARI rating conditions

R410A

Cond. temp. in °C (tc)	Evaporating temperature in °C (to)								
	-30	-20	-15	-10	-5	0	5	10	20
Cooling capacity in W									
5	3 989	6 239	7 699	9 413	11 406	13 701	-	-	-
15	3 600	5 730	7 098	8 702	10 564	12 708	15 160	17 942	-
20	3 407	5 471	6 791	8 337	10 131	12 197	14 561	17 245	-
30	3 020	4 940	6 160	7 583	9 236	11 141	13 323	15 806	21 769
40	-	4 388	5 499	6 794	8 298	10 034	12 027	14 301	19 787
50	-	3 806	4 801	5 961	7 309	8 870	10 667	12 725	17 719
60	-	-	-	5 078	6 263	7 640	9 235	11 069	15 557
65	-	-	-	-	5 716	6 999	8 489	10 210	14 439
Power input in W									
5	1 345	1 357	1 291	1 155	933	609	-	-	-
15	1 595	1 694	1 704	1 666	1 563	1 381	1 103	712	-
20	1 734	1 854	1 890	1 889	1 835	1 712	1 504	1 194	-
30	2 079	2 194	2 261	2 312	2 332	2 305	2 214	2 043	1 400
40	-	2 619	2 686	2 759	2 822	2 860	2 856	2 794	2 433
50	-	3 195	3 231	3 295	3 371	3 444	3 496	3 513	3 374
60	-	-	-	3 987	4 045	4 122	4 200	4 265	4 287
65	-	-	-	-	4 450	4 517	4 597	4 674	4 754
Current consumption in A									
5	4.18	4.11	3.92	3.58	3.05	2.28	-	-	-
15	5.00	5.11	5.10	4.98	4.73	4.28	3.61	2.67	-
20	5.39	5.55	5.60	5.57	5.43	5.12	4.61	3.86	-
30	6.27	6.42	6.55	6.65	6.68	6.61	6.38	5.97	4.39
40	-	7.46	7.60	7.76	7.91	8.01	8.00	7.85	6.97
50	-	8.86	8.95	9.11	9.32	9.51	9.66	9.72	9.40
60	-	-	-	10.90	11.09	11.33	11.57	11.78	11.90
65	-	-	-	-	12.19	12.42	12.68	12.94	13.23
Mass flow in kg/h									
5	64	99	120	145	174	207	-	-	-
15	62	97	118	143	172	205	243	286	-
20	61	96	117	142	171	204	242	284	-
30	59	94	115	140	169	201	239	281	383
40	-	91	113	137	166	199	236	278	379
50	-	88	110	134	163	195	232	275	375
60	-	-	-	131	159	192	229	271	371
65	-	-	-	-	157	190	227	268	368
Coefficient of performance (C.O.P.)									
5	2.97	4.60	5.96	8.15	12.23	22.50	-	-	-
15	2.26	3.38	4.17	5.22	6.76	9.20	13.75	25.21	-
20	1.97	2.95	3.59	4.41	5.52	7.12	9.68	14.44	-
30	1.45	2.25	2.72	3.28	3.96	4.83	6.02	7.74	15.55
40	-	1.68	2.05	2.46	2.94	3.51	4.21	5.12	8.13
50	-	1.19	1.49	1.81	2.17	2.58	3.05	3.62	5.25
60	-	-	-	1.27	1.55	1.85	2.20	2.60	3.63
65	-	-	-	-	1.28	1.55	1.85	2.18	3.04

Nominal performance at to = 7.2 °C, tc = 54.4 °C

Cooling capacity	10 876	W
Power input	3 817	W
Current consumption	10.53	A
Mass flow	249	kg/h
C.O.P.	2.85	

Pressure switch settings

Maximum HP switch setting	43.8	bar(g)
Minimum LP switch setting	1	bar(g)
LP pump down setting	1.2	bar(g)

Sound power data

Sound power level	dB(A)
With accoustic hood	dB(A)

to: Evaporating temperature at dew point

tc: Condensing temperature at dew point

Rating conditions : Superheat = 11.1 K , Subcooling = 8.3 K

Tolerance according EN12900

Danfoss can accept no responsibility for possible errors in catalogues, brochures and other printed material. Danfoss reserves the right to alter its products without notice.
This also applies to products already on order provided that such alternations can be made without subsequential changes being necessary in specifications already agreed.
All trademarks in this material are property of the respective companies. Danfoss and the Danfoss logotype are trademarks of Danfoss A/S. All rights reserved.

Performance data at 80 Hz, EN 12900 rating conditions

R410A

Cond. temp. in °C (tc)	Evaporating temperature in °C (to)								
	-30	-20	-15	-10	-5	0	5	10	20
Cooling capacity in W									
5	4 023	6 295	7 769	9 501	11 516	13 838	-	-	-
15	3 608	5 747	7 122	8 734	10 607	12 765	15 234	18 037	-
20	3 402	5 467	6 790	8 339	10 137	12 210	14 583	17 279	-
30	2 985	4 892	6 104	7 519	9 163	11 059	13 232	15 706	21 654
40	-	4 287	5 379	6 652	8 132	9 842	11 805	14 047	19 459
50	-	3 640	4 601	5 722	7 026	8 537	10 279	12 274	17 120
60	-	-	-	4 693	5 804	7 096	8 593	10 317	14 539
65	-	-	-	-	5 105	6 272	7 628	9 196	13 053
Power input in W									
5	1 456	1 472	1 403	1 261	1 030	694	-	-	-
15	1 721	1 832	1 843	1 804	1 697	1 507	1 218	814	-
20	1 866	2 002	2 042	2 041	1 985	1 856	1 640	1 319	-
30	2 226	2 364	2 437	2 493	2 514	2 485	2 389	2 212	1 545
40	-	2 811	2 888	2 968	3 036	3 075	3 070	3 005	2 628
50	-	3 412	3 461	3 535	3 618	3 695	3 750	3 766	3 617
60	-	-	-	4 261	4 329	4 413	4 496	4 562	4 580
65	-	-	-	-	4 754	4 830	4 915	4 995	5 073
Current consumption in A									
5	4.42	4.38	4.20	3.84	3.26	2.44	-	-	-
15	5.28	5.45	5.45	5.34	5.06	4.59	3.87	2.86	-
20	5.69	5.92	5.99	5.97	5.82	5.49	4.95	4.15	-
30	6.63	6.87	7.02	7.14	7.18	7.10	6.86	6.41	4.73
40	-	7.98	8.15	8.34	8.51	8.61	8.60	8.44	7.50
50	-	9.48	9.59	9.79	10.01	10.22	10.37	10.43	10.09
60	-	-	-	11.68	11.89	12.14	12.39	12.60	12.71
65	-	-	-	-	13.03	13.28	13.55	13.80	14.10
Mass flow in kg/h									
5	69	106	129	156	187	222	-	-	-
15	67	104	127	154	185	220	260	306	-
20	66	103	126	153	184	219	259	305	-
30	63	101	124	150	181	216	257	302	412
40	-	98	121	148	178	214	254	299	408
50	-	95	118	145	175	210	250	296	404
60	-	-	-	141	171	206	246	292	400
65	-	-	-	-	169	204	244	289	397
Coefficient of performance (C.O.P.)									
5	2.76	4.28	5.54	7.53	11.18	19.93	-	-	-
15	2.10	3.14	3.86	4.84	6.25	8.47	12.51	22.17	-
20	1.82	2.73	3.33	4.08	5.11	6.58	8.89	13.10	-
30	1.34	2.07	2.50	3.02	3.64	4.45	5.54	7.10	14.02
40	-	1.53	1.86	2.24	2.68	3.20	3.85	4.67	7.41
50	-	1.07	1.33	1.62	1.94	2.31	2.74	3.26	4.73
60	-	-	-	1.10	1.34	1.61	1.91	2.26	3.17
65	-	-	-	-	1.07	1.30	1.55	1.84	2.57

Nominal performance at to = 5 °C, tc = 50 °C

Cooling capacity	10 279	W
Power input	3 750	W
Current consumption	10.37	A
Mass flow	250	kg/h
C.O.P.	2.74	

Pressure switch settings

Maximum HP switch setting	43.8	bar(g)
Minimum LP switch setting	1	bar(g)
LP pump down setting	1.2	bar(g)

Sound power data

Sound power level	dB(A)
With accoustic hood	dB(A)

to: Evaporating temperature at dew point
tc: Condensing temperature at dew point
Rating conditions : Superheat = 10 K , Subcooling = 0 K

Tolerance according EN12900

Danfoss can accept no responsibility for possible errors in catalogues, brochures and other printed material. Danfoss reserves the right to alter its products without notice.
This also applies to products already on order provided that such alternations can be made without subsequential changes being necessary in specifications already agreed.
All trademarks in this material are property of the respective companies. Danfoss and the Danfoss logotype are trademarks of Danfoss A/S. All rights reserved.

Performance data at 80 Hz, ARI rating conditions

R410A

Cond. temp. in °C (tc)	Evaporating temperature in °C (to)								
	-30	-20	-15	-10	-5	0	5	10	20
Cooling capacity in W									
5	4 256	6 651	8 203	10 026	12 145	14 586	-	-	-
15	3 844	6 113	7 570	9 277	11 258	13 540	16 148	19 108	-
20	3 639	5 839	7 246	8 892	10 801	13 001	15 516	18 373	-
30	3 227	5 277	6 578	8 096	9 857	11 886	14 210	16 854	23 203
40	-	4 690	5 876	7 259	8 864	10 716	12 841	15 264	21 110
50	-	4 068	5 133	6 373	7 814	9 481	11 400	13 596	18 922
60	-	-	-	5 430	6 700	8 174	9 879	11 840	16 632
65	-	-	-	-	6 116	7 491	9 086	10 926	15 446
Power input in W									
5	1 456	1 472	1 403	1 261	1 030	694	-	-	-
15	1 721	1 832	1 843	1 804	1 697	1 507	1 218	814	-
20	1 866	2 002	2 042	2 041	1 985	1 856	1 640	1 319	-
30	2 226	2 364	2 437	2 493	2 514	2 485	2 389	2 212	1 545
40	-	2 811	2 888	2 968	3 036	3 075	3 070	3 005	2 628
50	-	3 412	3 461	3 535	3 618	3 695	3 750	3 766	3 617
60	-	-	-	4 261	4 329	4 413	4 496	4 562	4 580
65	-	-	-	-	4 754	4 830	4 915	4 995	5 073
Current consumption in A									
5	4.42	4.38	4.20	3.84	3.26	2.44	-	-	-
15	5.28	5.45	5.45	5.34	5.06	4.59	3.87	2.86	-
20	5.69	5.92	5.99	5.97	5.82	5.49	4.95	4.15	-
30	6.63	6.87	7.02	7.14	7.18	7.10	6.86	6.41	4.73
40	-	7.98	8.15	8.34	8.51	8.61	8.60	8.44	7.50
50	-	9.48	9.59	9.79	10.01	10.22	10.37	10.43	10.09
60	-	-	-	11.68	11.89	12.14	12.39	12.60	12.71
65	-	-	-	-	13.03	13.28	13.55	13.80	14.10
Mass flow in kg/h									
5	68	105	128	155	185	221	-	-	-
15	66	103	126	153	183	219	259	304	-
20	65	102	125	152	182	217	257	303	-
30	63	100	123	149	180	215	255	300	408
40	-	97	120	147	177	212	252	297	405
50	-	94	117	144	174	209	248	293	401
60	-	-	-	140	170	205	245	289	397
65	-	-	-	-	168	203	242	287	394
Coefficient of performance (C.O.P.)									
5	2.92	4.52	5.85	7.95	11.79	21.00	-	-	-
15	2.23	3.34	4.11	5.14	6.64	8.99	13.26	23.49	-
20	1.95	2.92	3.55	4.36	5.44	7.00	9.46	13.93	-
30	1.45	2.23	2.70	3.25	3.92	4.78	5.95	7.62	15.02
40	-	1.67	2.03	2.45	2.92	3.48	4.18	5.08	8.03
50	-	1.19	1.48	1.80	2.16	2.57	3.04	3.61	5.23
60	-	-	-	1.27	1.55	1.85	2.20	2.60	3.63
65	-	-	-	-	1.29	1.55	1.85	2.19	3.04

Nominal performance at to = 7.2 °C, tc = 54.4 °C

Cooling capacity	11 627	W
Power input	4 089	W
Current consumption	11.29	A
Mass flow	266	kg/h
C.O.P.	2.84	

Pressure switch settings

Maximum HP switch setting	43.8	bar(g)
Minimum LP switch setting	1	bar(g)
LP pump down setting	1.2	bar(g)

Sound power data

Sound power level	dB(A)
With accoustic hood	dB(A)

to: Evaporating temperature at dew point
tc: Condensing temperature at dew point
Rating conditions : Superheat = 11.1 K , Subcooling = 8.3 K

Tolerance according EN12900

Danfoss can accept no responsibility for possible errors in catalogues, brochures and other printed material. Danfoss reserves the right to alter its products without notice.
This also applies to products already on order provided that such alternations can be made without subsequential changes being necessary in specifications already agreed.
All trademarks in this material are property of the respective companies. Danfoss and the Danfoss logotype are trademarks of Danfoss A/S. All rights reserved.

Performance data at 85 Hz, EN 12900 rating conditions

R410A

Cond. temp. in °C (tc)	Evaporating temperature in °C (to)								
	-30	-20	-15	-10	-5	0	5	10	20
Cooling capacity in W									
5	4 274	6 683	8 244	10 078	12 212	14 670	-	-	-
15	3 837	6 106	7 564	9 273	11 258	13 544	16 160	19 129	-
20	3 618	5 812	7 215	8 858	10 764	12 962	15 476	18 333	-
30	3 175	5 204	6 491	7 994	9 739	11 751	14 056	16 680	22 987
40	-	4 562	5 724	7 078	8 651	10 467	12 552	14 932	20 676
50	-	3 872	4 897	6 092	7 480	9 088	10 940	13 061	18 209
60	-	-	-	4 996	6 181	7 559	9 154	10 990	15 481
65	-	-	-	-	5 438	6 683	8 129	9 799	13 907
Power input in W									
5	1 571	1 591	1 520	1 373	1 134	788	-	-	-
15	1 850	1 974	1 987	1 946	1 835	1 638	1 340	925	-
20	2 002	2 155	2 198	2 198	2 139	2 006	1 782	1 451	-
30	2 374	2 538	2 619	2 678	2 700	2 670	2 570	2 385	1 698
40	-	3 006	3 094	3 182	3 255	3 295	3 289	3 219	2 827
50	-	3 630	3 694	3 779	3 871	3 952	4 008	4 022	3 863
60	-	-	-	4 539	4 618	4 709	4 796	4 864	4 875
65	-	-	-	-	5 062	5 147	5 238	5 320	5 394
Current consumption in A									
5	4.67	4.67	4.48	4.10	3.49	2.61	-	-	-
15	5.56	5.80	5.82	5.70	5.41	4.90	4.13	3.06	-
20	5.99	6.30	6.39	6.38	6.22	5.88	5.30	4.44	-
30	6.99	7.32	7.51	7.65	7.70	7.61	7.36	6.88	5.09
40	-	8.52	8.73	8.94	9.13	9.24	9.22	9.05	8.04
50	-	10.12	10.27	10.49	10.73	10.95	11.11	11.17	10.79
60	-	-	-	12.48	12.71	12.97	13.23	13.44	13.53
65	-	-	-	-	13.90	14.16	14.44	14.70	14.97
Mass flow in kg/h									
5	73	112	137	165	198	236	-	-	-
15	71	110	135	163	196	233	276	325	-
20	70	109	134	162	195	232	275	324	-
30	67	107	132	160	193	230	273	321	437
40	-	104	129	157	190	227	270	318	434
50	-	101	125	154	186	224	266	314	430
60	-	-	-	150	183	220	262	311	426
65	-	-	-	-	180	218	260	308	423
Coefficient of performance (C.O.P.)									
5	2.72	4.20	5.42	7.34	10.77	18.61	-	-	-
15	2.07	3.09	3.81	4.77	6.14	8.27	12.06	20.68	-
20	1.81	2.70	3.28	4.03	5.03	6.46	8.69	12.63	-
30	1.34	2.05	2.48	2.98	3.61	4.40	5.47	6.99	13.54
40	-	1.52	1.85	2.22	2.66	3.18	3.82	4.64	7.31
50	-	1.07	1.33	1.61	1.93	2.30	2.73	3.25	4.71
60	-	-	-	1.10	1.34	1.61	1.91	2.26	3.18
65	-	-	-	-	1.07	1.30	1.55	1.84	2.58

Nominal performance at to = 5 °C, tc = 50 °C

Cooling capacity	10 940	W
Power input	4 008	W
Current consumption	11.11	A
Mass flow	266	kg/h
C.O.P.	2.73	

to: Evaporating temperature at dew point
tc: Condensing temperature at dew point
Rating conditions : Superheat = 10 K , Subcooling = 0 K

Pressure switch settings

Maximum HP switch setting	43.8	bar(g)
Minimum LP switch setting	1	bar(g)
LP pump down setting	1.2	bar(g)

Sound power data

Sound power level	dB(A)
With accoustic hood	dB(A)

Tolerance according EN12900

Danfoss can accept no responsibility for possible errors in catalogues, brochures and other printed material. Danfoss reserves the right to alter its products without notice.
This also applies to products already on order provided that such alternations can be made without subsequential changes being necessary in specifications already agreed.
All trademarks in this material are property of the respective companies. Danfoss and the Danfoss logotype are trademarks of Danfoss A/S. All rights reserved.

Performance data at 85 Hz, ARI rating conditions

R410A

Cond. temp. in °C (tc)	Evaporating temperature in °C (to)								
	-30	-20	-15	-10	-5	0	5	10	20
Cooling capacity in W									
5	4 522	7 061	8 705	10 635	12 879	15 463	-	-	-
15	4 088	6 495	8 040	9 849	11 949	14 367	17 130	20 265	-
20	3 871	6 207	7 700	9 445	11 470	13 801	16 467	19 494	-
30	3 432	5 614	6 996	8 607	10 477	12 630	15 095	17 899	24 632
40	-	4 991	6 253	7 724	9 429	11 397	13 654	16 227	22 430
50	-	4 328	5 464	6 785	8 319	10 092	12 133	14 467	20 126
60	-	-	-	5 781	7 136	8 707	10 523	12 611	17 709
65	-	-	-	-	6 514	7 982	9 683	11 644	16 456
Power input in W									
5	1 571	1 591	1 520	1 373	1 134	788	-	-	-
15	1 850	1 974	1 987	1 946	1 835	1 638	1 340	925	-
20	2 002	2 155	2 198	2 198	2 139	2 006	1 782	1 451	-
30	2 374	2 538	2 619	2 678	2 700	2 670	2 570	2 385	1 698
40	-	3 006	3 094	3 182	3 255	3 295	3 289	3 219	2 827
50	-	3 630	3 694	3 779	3 871	3 952	4 008	4 022	3 863
60	-	-	-	4 539	4 618	4 709	4 796	4 864	4 875
65	-	-	-	-	5 062	5 147	5 238	5 320	5 394
Current consumption in A									
5	4.67	4.67	4.48	4.10	3.49	2.61	-	-	-
15	5.56	5.80	5.82	5.70	5.41	4.90	4.13	3.06	-
20	5.99	6.30	6.39	6.38	6.22	5.88	5.30	4.44	-
30	6.99	7.32	7.51	7.65	7.70	7.61	7.36	6.88	5.09
40	-	8.52	8.73	8.94	9.13	9.24	9.22	9.05	8.04
50	-	10.12	10.27	10.49	10.73	10.95	11.11	11.17	10.79
60	-	-	-	12.48	12.71	12.97	13.23	13.44	13.53
65	-	-	-	-	13.90	14.16	14.44	14.70	14.97
Mass flow in kg/h									
5	72	112	136	164	197	234	-	-	-
15	71	110	134	162	195	232	274	323	-
20	69	109	133	161	194	231	273	321	-
30	67	106	131	159	191	228	271	319	433
40	-	104	128	156	189	226	268	316	430
50	-	100	125	153	185	222	264	312	426
60	-	-	-	149	181	218	261	308	422
65	-	-	-	-	179	216	258	306	420
Coefficient of performance (C.O.P.)									
5	2.88	4.44	5.73	7.75	11.36	19.61	-	-	-
15	2.21	3.29	4.05	5.06	6.51	8.77	12.78	21.91	-
20	1.93	2.88	3.50	4.30	5.36	6.88	9.24	13.43	-
30	1.45	2.21	2.67	3.21	3.88	4.73	5.87	7.50	14.50
40	-	1.66	2.02	2.43	2.90	3.46	4.15	5.04	7.93
50	-	1.19	1.48	1.80	2.15	2.55	3.03	3.60	5.21
60	-	-	-	1.27	1.55	1.85	2.19	2.59	3.63
65	-	-	-	-	1.29	1.55	1.85	2.19	3.05

Nominal performance at to = 7.2 °C, tc = 54.4 °C

Cooling capacity	12 379	W
Power input	4 365	W
Current consumption	12.07	A
Mass flow	283	kg/h
C.O.P.	2.84	

Pressure switch settings

Maximum HP switch setting	43.8	bar(g)
Minimum LP switch setting	1	bar(g)
LP pump down setting	1.2	bar(g)

Sound power data

Sound power level	dB(A)
With accoustic hood	dB(A)

to: Evaporating temperature at dew point
tc: Condensing temperature at dew point
Rating conditions : Superheat = 11.1 K , Subcooling = 8.3 K

Tolerance according EN12900

Danfoss can accept no responsibility for possible errors in catalogues, brochures and other printed material. Danfoss reserves the right to alter its products without notice.
This also applies to products already on order provided that such alternations can be made without subsequential changes being necessary in specifications already agreed.
All trademarks in this material are property of the respective companies. Danfoss and the Danfoss logotype are trademarks of Danfoss A/S. All rights reserved.

Performance data at 90 Hz, EN 12900 rating conditions

R410A

Cond. temp. in °C (tc)	Evaporating temperature in °C (to)								
	-30	-20	-15	-10	-5	0	5	10	20
Cooling capacity in W									
5	4 525	7 068	8 716	10 651	12 901	15 494	-	-	-
15	4 065	6 465	8 006	9 810	11 905	14 319	17 079	20 213	-
20	3 834	6 156	7 639	9 375	11 390	13 711	16 365	19 381	-
30	3 364	5 515	6 878	8 469	10 315	12 442	14 879	17 651	24 314
40	-	4 836	6 068	7 504	9 170	11 093	13 299	15 817	21 891
50	-	4 102	5 192	6 460	7 934	9 639	11 601	13 848	19 298
60	-	-	-	5 298	6 558	8 022	9 715	11 663	16 423
65	-	-	-	-	5 769	7 093	8 630	10 404	14 762
Power input in W									
5	1 690	1 715	1 641	1 490	1 244	891	-	-	-
15	1 983	2 121	2 135	2 093	1 978	1 775	1 470	1 046	-
20	2 141	2 312	2 359	2 360	2 298	2 160	1 930	1 591	-
30	2 523	2 716	2 805	2 869	2 892	2 859	2 754	2 564	1 861
40	-	3 205	3 306	3 402	3 478	3 520	3 512	3 438	3 032
50	-	3 849	3 931	4 029	4 128	4 214	4 271	4 283	4 112
60	-	-	-	4 819	4 911	5 010	5 101	5 169	5 173
65	-	-	-	-	5 374	5 468	5 565	5 649	5 717
Current consumption in A									
5	4.92	4.97	4.78	4.38	3.73	2.78	-	-	-
15	5.84	6.16	6.19	6.07	5.77	5.23	4.41	3.27	-
20	6.30	6.70	6.81	6.81	6.64	6.28	5.66	4.75	-
30	7.36	7.79	8.01	8.17	8.23	8.14	7.87	7.36	5.46
40	-	9.08	9.32	9.57	9.77	9.89	9.87	9.68	8.60
50	-	10.78	10.97	11.21	11.48	11.71	11.88	11.93	11.50
60	-	-	-	13.31	13.56	13.83	14.10	14.31	14.37
65	-	-	-	-	14.80	15.07	15.35	15.61	15.87
Mass flow in kg/h									
5	77	119	145	175	209	249	-	-	-
15	75	117	143	173	207	247	292	343	-
20	74	116	142	172	206	246	291	342	-
30	71	113	139	169	204	243	288	340	462
40	-	110	137	167	201	241	286	337	459
50	-	107	133	163	198	237	282	333	456
60	-	-	-	159	194	233	278	330	452
65	-	-	-	-	191	231	276	327	449
Coefficient of performance (C.O.P.)									
5	2.68	4.12	5.31	7.15	10.37	17.40	-	-	-
15	2.05	3.05	3.75	4.69	6.02	8.07	11.62	19.32	-
20	1.79	2.66	3.24	3.97	4.96	6.35	8.48	12.18	-
30	1.33	2.03	2.45	2.95	3.57	4.35	5.40	6.89	13.07
40	-	1.51	1.84	2.21	2.64	3.15	3.79	4.60	7.22
50	-	1.07	1.32	1.60	1.92	2.29	2.72	3.23	4.69
60	-	-	-	1.10	1.34	1.60	1.90	2.26	3.17
65	-	-	-	-	1.07	1.30	1.55	1.84	2.58

Nominal performance at to = 5 °C, tc = 50 °C

Cooling capacity	11 601	W
Power input	4 271	W
Current consumption	11.88	A
Mass flow	282	kg/h
C.O.P.	2.72	

Pressure switch settings

Maximum HP switch setting	43.8	bar(g)
Minimum LP switch setting	1	bar(g)
LP pump down setting	1.2	bar(g)

Sound power data

Sound power level	dB(A)
With accoustic hood	dB(A)

to: Evaporating temperature at dew point

tc: Condensing temperature at dew point

Rating conditions : Superheat = 10 K , Subcooling = 0 K

Tolerance according EN12900

Danfoss can accept no responsibility for possible errors in catalogues, brochures and other printed material. Danfoss reserves the right to alter its products without notice. This also applies to products already on order provided that such alternations can be made without subsequential changes being necessary in specifications already agreed. All trademarks in this material are property of the respective companies. Danfoss and the Danfoss logotype are trademarks of Danfoss A/S. All rights reserved.

Performance data at 90 Hz, ARI rating conditions

R410A

Cond. temp. in °C (tc)	Evaporating temperature in °C (to)								
	-30	-20	-15	-10	-5	0	5	10	20
Cooling capacity in W									
5	4 788	7 468	9 203	11 240	13 606	16 331	-	-	-
15	4 331	6 877	8 509	10 420	12 637	15 189	18 105	21 413	-
20	4 102	6 574	8 153	9 997	12 136	14 598	17 413	20 608	-
30	3 637	5 950	7 413	9 119	11 096	13 373	15 978	18 941	26 053
40	-	5 290	6 630	8 188	9 995	12 078	14 466	17 188	23 748
50	-	4 585	5 792	7 196	8 824	10 704	12 866	15 339	21 330
60	-	-	-	6 130	7 571	9 241	11 169	13 383	18 788
65	-	-	-	-	6 910	8 472	10 279	12 362	17 468
Power input in W									
5	1 690	1 715	1 641	1 490	1 244	891	-	-	-
15	1 983	2 121	2 135	2 093	1 978	1 775	1 470	1 046	-
20	2 141	2 312	2 359	2 360	2 298	2 160	1 930	1 591	-
30	2 523	2 716	2 805	2 869	2 892	2 859	2 754	2 564	1 861
40	-	3 205	3 306	3 402	3 478	3 520	3 512	3 438	3 032
50	-	3 849	3 931	4 029	4 128	4 214	4 271	4 283	4 112
60	-	-	-	4 819	4 911	5 010	5 101	5 169	5 173
65	-	-	-	-	5 374	5 468	5 565	5 649	5 717
Current consumption in A									
5	4.92	4.97	4.78	4.38	3.73	2.78	-	-	-
15	5.84	6.16	6.19	6.07	5.77	5.23	4.41	3.27	-
20	6.30	6.70	6.81	6.81	6.64	6.28	5.66	4.75	-
30	7.36	7.79	8.01	8.17	8.23	8.14	7.87	7.36	5.46
40	-	9.08	9.32	9.57	9.77	9.89	9.87	9.68	8.60
50	-	10.78	10.97	11.21	11.48	11.71	11.88	11.93	11.50
60	-	-	-	13.31	13.56	13.83	14.10	14.31	14.37
65	-	-	-	-	14.80	15.07	15.35	15.61	15.87
Mass flow in kg/h									
5	77	118	144	173	208	247	-	-	-
15	75	116	142	172	206	245	290	341	-
20	74	115	141	171	205	244	289	340	-
30	71	113	139	168	203	242	286	337	458
40	-	110	136	166	200	239	284	334	455
50	-	106	132	162	197	236	280	331	452
60	-	-	-	158	192	232	277	327	448
65	-	-	-	-	190	230	274	325	446
Coefficient of performance (C.O.P.)									
5	2.83	4.35	5.61	7.55	10.93	18.34	-	-	-
15	2.18	3.24	3.99	4.98	6.39	8.56	12.32	20.46	-
20	1.92	2.84	3.46	4.24	5.28	6.76	9.02	12.95	-
30	1.44	2.19	2.64	3.18	3.84	4.68	5.80	7.39	14.00
40	-	1.65	2.01	2.41	2.87	3.43	4.12	5.00	7.83
50	-	1.19	1.47	1.79	2.14	2.54	3.01	3.58	5.19
60	-	-	-	1.27	1.54	1.84	2.19	2.59	3.63
65	-	-	-	-	1.29	1.55	1.85	2.19	3.06

Nominal performance at to = 7.2 °C, tc = 54.4 °C

Cooling capacity	13 132	W
Power input	4 646	W
Current consumption	12.89	A
Mass flow	300	kg/h
C.O.P.	2.83	

to: Evaporating temperature at dew point

tc: Condensing temperature at dew point

Rating conditions : Superheat = 11.1 K , Subcooling = 8.3 K

Pressure switch settings

Maximum HP switch setting	43.8	bar(g)
Minimum LP switch setting	1	bar(g)
LP pump down setting	1.2	bar(g)

Sound power data

Sound power level	dB(A)
With accoustic hood	dB(A)

Tolerance according EN12900

Danfoss can accept no responsibility for possible errors in catalogues, brochures and other printed material. Danfoss reserves the right to alter its products without notice. This also applies to products already on order provided that such alternations can be made without subsequential changes being necessary in specifications already agreed. All trademarks in this material are property of the respective companies. Danfoss and the Danfoss logotype are trademarks of Danfoss A/S. All rights reserved.

Performance data at 95 Hz, EN 12900 rating conditions

R410A

Cond. temp. in °C (tc)	Evaporating temperature in °C (to)								
	-30	-20	-15	-10	-5	0	5	10	20
Cooling capacity in W									
5	4 775	7 452	9 185	11 220	13 585	16 311	-	-	-
15	4 292	6 823	8 445	10 345	12 550	15 090	17 993	21 289	-
20	4 049	6 499	8 063	9 891	12 012	14 456	17 250	20 423	-
30	3 552	5 826	7 265	8 943	10 889	13 131	15 698	18 619	25 635
40	-	5 109	6 412	7 929	9 689	11 718	14 046	16 700	23 103
50	-	4 330	5 485	6 829	8 388	10 190	12 263	14 635	20 387
60	-	-	-	5 597	6 934	8 485	10 277	12 337	17 368
65	-	-	-	-	6 098	7 503	9 131	11 009	15 619
Power input in W									
5	1 813	1 843	1 767	1 612	1 361	1 001	-	-	-
15	2 119	2 272	2 288	2 244	2 126	1 918	1 607	1 177	-
20	2 283	2 475	2 525	2 526	2 462	2 319	2 083	1 739	-
30	2 674	2 899	2 996	3 064	3 088	3 052	2 944	2 747	2 032
40	-	3 407	3 522	3 626	3 707	3 749	3 739	3 660	3 241
50	-	4 069	4 171	4 283	4 391	4 481	4 538	4 547	4 365
60	-	-	-	5 103	5 209	5 316	5 411	5 478	5 473
65	-	-	-	-	5 689	5 794	5 897	5 982	6 042
Current consumption in A									
5	5.17	5.28	5.08	4.66	3.97	2.97	-	-	-
15	6.12	6.52	6.57	6.46	6.14	5.57	4.70	3.49	-
20	6.60	7.10	7.24	7.24	7.08	6.69	6.03	5.07	-
30	7.73	8.27	8.53	8.71	8.78	8.69	8.40	7.85	5.84
40	-	9.66	9.94	10.22	10.44	10.56	10.54	10.33	9.18
50	-	11.46	11.69	11.97	12.25	12.50	12.67	12.71	12.24
60	-	-	-	14.17	14.44	14.72	14.99	15.20	15.23
65	-	-	-	-	15.73	16.01	16.29	16.54	16.77
Mass flow in kg/h									
5	81	125	152	184	220	262	-	-	-
15	79	123	151	182	218	260	308	362	-
20	78	122	150	181	217	259	307	360	-
30	75	120	147	179	215	257	304	358	487
40	-	117	144	176	213	254	302	356	484
50	-	113	140	172	209	251	299	352	481
60	-	-	-	168	205	247	295	349	477
65	-	-	-	-	202	244	292	346	475
Coefficient of performance (C.O.P.)									
5	2.63	4.04	5.20	6.96	9.98	16.29	-	-	-
15	2.03	3.00	3.69	4.61	5.90	7.87	11.20	18.08	-
20	1.77	2.63	3.19	3.92	4.88	6.23	8.28	11.74	-
30	1.33	2.01	2.42	2.92	3.53	4.30	5.33	6.78	12.61
40	-	1.50	1.82	2.19	2.61	3.13	3.76	4.56	7.13
50	-	1.06	1.32	1.59	1.91	2.27	2.70	3.22	4.67
60	-	-	-	1.10	1.33	1.60	1.90	2.25	3.17
65	-	-	-	-	1.07	1.29	1.55	1.84	2.58

Nominal performance at to = 5 °C, tc = 50 °C

Cooling capacity	12 263	W
Power input	4 538	W
Current consumption	12.67	A
Mass flow	299	kg/h
C.O.P.	2.70	

to: Evaporating temperature at dew point

tc: Condensing temperature at dew point

Rating conditions : Superheat = 10 K , Subcooling = 0 K

Pressure switch settings

Maximum HP switch setting	43.8	bar(g)
Minimum LP switch setting	1	bar(g)
LP pump down setting	1.2	bar(g)

Sound power data

Sound power level	dB(A)
With accoustic hood	dB(A)

Tolerance according EN12900

Danfoss can accept no responsibility for possible errors in catalogues, brochures and other printed material. Danfoss reserves the right to alter its products without notice.
This also applies to products already on order provided that such alternations can be made without subsequential changes being necessary in specifications already agreed.
All trademarks in this material are property of the respective companies. Danfoss and the Danfoss logotype are trademarks of Danfoss A/S. All rights reserved.

Performance data at 95 Hz, ARI rating conditions

R410A

Cond. temp. in °C (tc)	Evaporating temperature in °C (to)								
	-30	-20	-15	-10	-5	0	5	10	20
Cooling capacity in W									
5	5 053	7 874	9 699	11 840	14 327	17 192	-	-	-
15	4 573	7 257	8 977	10 988	13 321	16 006	19 073	22 553	-
20	4 332	6 941	8 604	10 547	12 800	15 392	18 354	21 716	-
30	3 840	6 285	7 830	9 629	11 714	14 113	16 859	19 980	27 469
40	-	5 589	7 005	8 653	10 560	12 759	15 278	18 148	25 063
50	-	4 839	6 120	7 606	9 328	11 316	13 600	16 211	22 533
60	-	-	-	6 477	8 004	9 773	11 814	14 157	19 868
65	-	-	-	-	7 305	8 961	10 877	13 082	18 482
Power input in W									
5	1 813	1 843	1 767	1 612	1 361	1 001	-	-	-
15	2 119	2 272	2 288	2 244	2 126	1 918	1 607	1 177	-
20	2 283	2 475	2 525	2 526	2 462	2 319	2 083	1 739	-
30	2 674	2 899	2 996	3 064	3 088	3 052	2 944	2 747	2 032
40	-	3 407	3 522	3 626	3 707	3 749	3 739	3 660	3 241
50	-	4 069	4 171	4 283	4 391	4 481	4 538	4 547	4 365
60	-	-	-	5 103	5 209	5 316	5 411	5 478	5 473
65	-	-	-	-	5 689	5 794	5 897	5 982	6 042
Current consumption in A									
5	5.17	5.28	5.08	4.66	3.97	2.97	-	-	-
15	6.12	6.52	6.57	6.46	6.14	5.57	4.70	3.49	-
20	6.60	7.10	7.24	7.24	7.08	6.69	6.03	5.07	-
30	7.73	8.27	8.53	8.71	8.78	8.69	8.40	7.85	5.84
40	-	9.66	9.94	10.22	10.44	10.56	10.54	10.33	9.18
50	-	11.46	11.69	11.97	12.25	12.50	12.67	12.71	12.24
60	-	-	-	14.17	14.44	14.72	14.99	15.20	15.23
65	-	-	-	-	15.73	16.01	16.29	16.54	16.77
Mass flow in kg/h									
5	81	124	151	183	219	260	-	-	-
15	79	123	150	181	217	258	305	359	-
20	78	122	149	180	216	257	304	358	-
30	75	119	146	178	214	255	302	356	483
40	-	116	143	175	211	253	300	353	481
50	-	112	140	171	208	249	296	350	477
60	-	-	-	167	203	245	293	346	474
65	-	-	-	-	201	243	290	344	472
Coefficient of performance (C.O.P.)									
5	2.79	4.27	5.49	7.35	10.53	17.17	-	-	-
15	2.16	3.19	3.92	4.90	6.27	8.35	11.87	19.15	-
20	1.90	2.80	3.41	4.18	5.20	6.64	8.81	12.49	-
30	1.44	2.17	2.61	3.14	3.79	4.62	5.73	7.27	13.52
40	-	1.64	1.99	2.39	2.85	3.40	4.09	4.96	7.73
50	-	1.19	1.47	1.78	2.12	2.53	3.00	3.57	5.16
60	-	-	-	1.27	1.54	1.84	2.18	2.58	3.63
65	-	-	-	-	1.28	1.55	1.84	2.19	3.06

Nominal performance at to = 7.2 °C, tc = 54.4 °C

Cooling capacity	13 885	W
Power input	4 931	W
Current consumption	13.72	A
Mass flow	318	kg/h
C.O.P.	2.82	

Pressure switch settings

Maximum HP switch setting	43.8	bar(g)
Minimum LP switch setting	1	bar(g)
LP pump down setting	1.2	bar(g)

Sound power data

Sound power level	dB(A)
With accoustic hood	dB(A)

to: Evaporating temperature at dew point

tc: Condensing temperature at dew point

Rating conditions : Superheat = 11.1 K , Subcooling = 8.3 K

Tolerance according EN12900

Danfoss can accept no responsibility for possible errors in catalogues, brochures and other printed material. Danfoss reserves the right to alter its products without notice.
This also applies to products already on order provided that such alternations can be made without subsequential changes being necessary in specifications already agreed.
All trademarks in this material are property of the respective companies. Danfoss and the Danfoss logotype are trademarks of Danfoss A/S. All rights reserved.

Performance data at 100 Hz, EN 12900 rating conditions

R410A

Cond. temp. in °C (tc)	Evaporating temperature in °C (to)								
	-30	-20	-15	-10	-5	0	5	10	20
Cooling capacity in W									
5	5 025	7 834	9 651	11 784	14 263	17 119	-	-	-
15	4 519	7 179	8 884	10 877	13 191	15 856	18 901	22 357	-
20	4 264	6 842	8 485	10 406	12 633	15 198	18 130	21 459	-
30	3 739	6 137	7 652	9 417	11 463	13 820	16 516	19 584	26 950
40	-	5 380	6 755	8 354	10 207	12 343	14 792	17 583	24 312
50	-	4 556	5 777	7 196	8 841	10 741	12 925	15 423	21 476
60	-	-	-	5 895	7 309	8 947	10 839	13 012	18 314
65	-	-	-	-	6 426	7 912	9 633	11 616	16 477
Power input in W									
5	1 941	1 976	1 898	1 739	1 484	1 120	-	-	-
15	2 260	2 428	2 446	2 400	2 278	2 066	1 751	1 318	-
20	2 428	2 642	2 696	2 696	2 630	2 484	2 243	1 895	-
30	2 826	3 087	3 193	3 264	3 288	3 250	3 137	2 936	2 212
40	-	3 613	3 742	3 856	3 941	3 984	3 970	3 886	3 456
50	-	4 290	4 414	4 542	4 659	4 753	4 809	4 815	4 620
60	-	-	-	5 389	5 510	5 627	5 725	5 791	5 774
65	-	-	-	-	6 008	6 125	6 233	6 319	6 370
Current consumption in A									
5	5.43	5.59	5.40	4.96	4.23	3.17	-	-	-
15	6.40	6.90	6.97	6.86	6.52	5.92	5.00	3.72	-
20	6.91	7.51	7.68	7.70	7.52	7.11	6.42	5.40	-
30	8.10	8.77	9.06	9.27	9.35	9.26	8.94	8.37	6.24
40	-	10.25	10.58	10.89	11.13	11.26	11.23	11.00	9.77
50	-	12.17	12.44	12.75	13.06	13.32	13.49	13.52	12.99
60	-	-	-	15.06	15.34	15.64	15.91	16.11	16.11
65	-	-	-	-	16.68	16.97	17.26	17.50	17.69
Mass flow in kg/h									
5	86	132	160	193	231	275	-	-	-
15	84	130	158	191	230	273	323	380	-
20	82	129	157	191	229	272	322	379	-
30	79	126	155	188	227	270	320	377	512
40	-	123	152	185	224	268	318	374	510
50	-	118	148	182	220	265	315	371	507
60	-	-	-	177	216	260	311	368	504
65	-	-	-	-	213	258	308	365	501
Coefficient of performance (C.O.P.)									
5	2.59	3.96	5.08	6.78	9.61	15.29	-	-	-
15	2.00	2.96	3.63	4.53	5.79	7.67	10.79	16.96	-
20	1.76	2.59	3.15	3.86	4.80	6.12	8.08	11.33	-
30	1.32	1.99	2.40	2.88	3.49	4.25	5.26	6.67	12.18
40	-	1.49	1.81	2.17	2.59	3.10	3.73	4.52	7.04
50	-	1.06	1.31	1.58	1.90	2.26	2.69	3.20	4.65
60	-	-	-	1.09	1.33	1.59	1.89	2.25	3.17
65	-	-	-	-	1.07	1.29	1.55	1.84	2.59

Nominal performance at to = 5 °C, tc = 50 °C

Cooling capacity	12 925	W
Power input	4 809	W
Current consumption	13.49	A
Mass flow	315	kg/h
C.O.P.	2.69	

to: Evaporating temperature at dew point

tc: Condensing temperature at dew point

Rating conditions : Superheat = 10 K , Subcooling = 0 K

Pressure switch settings

Maximum HP switch setting	43.8	bar(g)
Minimum LP switch setting	1	bar(g)
LP pump down setting	1.2	bar(g)

Sound power data

Sound power level	86	dB(A)
With accoustic hood	79	dB(A)

Tolerance according EN12900

Danfoss can accept no responsibility for possible errors in catalogues, brochures and other printed material. Danfoss reserves the right to alter its products without notice. This also applies to products already on order provided that such alternations can be made without subsequential changes being necessary in specifications already agreed. All trademarks in this material are property of the respective companies. Danfoss and the Danfoss logotype are trademarks of Danfoss A/S. All rights reserved.

Performance data at 100 Hz, ARI rating conditions

R410A

Cond. temp. in °C (tc)	Evaporating temperature in °C (to)								
	-30	-20	-15	-10	-5	0	5	10	20
Cooling capacity in W									
5	5 317	8 277	10 191	12 435	15 043	18 044	-	-	-
15	4 815	7 637	9 442	11 554	14 002	16 818	20 036	23 685	-
20	4 562	7 307	9 055	11 096	13 461	16 182	19 290	22 818	-
30	4 042	6 620	8 246	10 139	12 331	14 853	17 737	21 015	28 878
40	-	5 886	7 381	9 117	11 126	13 439	16 090	19 108	26 375
50	-	5 092	6 445	8 015	9 832	11 928	14 335	17 084	23 737
60	-	-	-	6 822	8 437	10 306	12 460	14 931	20 951
65	-	-	-	-	7 698	9 450	11 474	13 802	19 498
Power input in W									
5	1 941	1 976	1 898	1 739	1 484	1 120	-	-	-
15	2 260	2 428	2 446	2 400	2 278	2 066	1 751	1 318	-
20	2 428	2 642	2 696	2 696	2 630	2 484	2 243	1 895	-
30	2 826	3 087	3 193	3 264	3 288	3 250	3 137	2 936	2 212
40	-	3 613	3 742	3 856	3 941	3 984	3 970	3 886	3 456
50	-	4 290	4 414	4 542	4 659	4 753	4 809	4 815	4 620
60	-	-	-	5 389	5 510	5 627	5 725	5 791	5 774
65	-	-	-	-	6 008	6 125	6 233	6 319	6 370
Current consumption in A									
5	5.43	5.59	5.40	4.96	4.23	3.17	-	-	-
15	6.40	6.90	6.97	6.86	6.52	5.92	5.00	3.72	-
20	6.91	7.51	7.68	7.70	7.52	7.11	6.42	5.40	-
30	8.10	8.77	9.06	9.27	9.35	9.26	8.94	8.37	6.24
40	-	10.25	10.58	10.89	11.13	11.26	11.23	11.00	9.77
50	-	12.17	12.44	12.75	13.06	13.32	13.49	13.52	12.99
60	-	-	-	15.06	15.34	15.64	15.91	16.11	16.11
65	-	-	-	-	16.68	16.97	17.26	17.50	17.69
Mass flow in kg/h									
5	85	131	159	192	230	273	-	-	-
15	83	129	157	190	228	271	321	377	-
20	82	128	156	189	227	271	320	376	-
30	79	125	154	187	225	269	318	374	508
40	-	122	151	184	222	266	316	372	506
50	-	118	147	181	219	263	313	369	503
60	-	-	-	176	214	259	309	365	499
65	-	-	-	-	212	256	306	363	497
Coefficient of performance (C.O.P.)									
5	2.74	4.19	5.37	7.15	10.14	16.11	-	-	-
15	2.13	3.15	3.86	4.81	6.15	8.14	11.44	17.96	-
20	1.88	2.77	3.36	4.11	5.12	6.52	8.60	12.04	-
30	1.43	2.14	2.58	3.11	3.75	4.57	5.65	7.16	13.05
40	-	1.63	1.97	2.36	2.82	3.37	4.05	4.92	7.63
50	-	1.19	1.46	1.76	2.11	2.51	2.98	3.55	5.14
60	-	-	-	1.27	1.53	1.83	2.18	2.58	3.63
65	-	-	-	-	1.28	1.54	1.84	2.18	3.06

Nominal performance at to = 7.2 °C, tc = 54.4 °C

Cooling capacity	14 639	W
Power input	5 221	W
Current consumption	14.59	A
Mass flow	335	kg/h
C.O.P.	2.80	

to: Evaporating temperature at dew point

tc: Condensing temperature at dew point

Rating conditions : Superheat = 11.1 K , Subcooling = 8.3 K

Pressure switch settings

Maximum HP switch setting	43.8	bar(g)
Minimum LP switch setting	1	bar(g)
LP pump down setting	1.2	bar(g)

Sound power data

Sound power level	86	dB(A)
With accoustic hood	79	dB(A)

Tolerance according EN12900

Danfoss can accept no responsibility for possible errors in catalogues, brochures and other printed material. Danfoss reserves the right to alter its products without notice. This also applies to products already on order provided that such alternations can be made without subsequential changes being necessary in specifications already agreed. All trademarks in this material are property of the respective companies. Danfoss and the Danfoss logotype are trademarks of Danfoss A/S. All rights reserved.