ENGINEERING
TOMORROW

Data sheet

Liquid level switch
Type AKS 38

AKS 38 is an electro-mechanical liquid level switch designed to provide a reliable, electro-mechanical response to liquid level changes.

The simple and basic design ensures long lifetime performance and reliable operation for many applications.

AKS 38 can control liquid level in vessels and accumulators or can be used as a low / high level alarm.

Features

- Based on Danfoss liquid level switch type 38E
- DIN, ANSI and FPT / NPT flanges
- The switch box can be placed in any position on top of float housing for ease of installation.
- Adjustable liquid level differential switch point.
- Electric magnetic microswitch, mechanically activated.
- The complete switch box can easily be replaced without any interference with the refrigeration system.
- Switch box supplied with a DIN plug for easy installation and service.
- Flanges included.
- Classification: DNV, CRN, BV, EAC etc.
  To get an updated list of certification on the products please contact your local Danfoss Sales Company.

Technical data

- *Refrigerants*
  Applicable to HCFC, non flammable HFC and R717 (Ammonia).
  Flammable hydrocarbons are not recommended.
- *Temperature range*
  -50 – 65 °C / -58 – 149 °F
- *Pressure range*
  AKS 38 is designed for a max. working pressure of 28 bar g / 406 psi g

IMPORTANT
Should pressure testing in excess of 28 bar g / 406 psig be necessary then the internal float assembly must be removed, thus allowing a maximum test pressure of 42 bar g / 609 psig.

Technical data

- *Material*
  Float housing:
  Cast Iron, zinc chromated,
  EN-GJS-400-18-LT

  Floats housing bolts:
  Stainless steel
  A2-70 (DIN 267-11) / ASTM A-276

  Flanges:
  P285QH
  EN 10222-4 / ASTM A350

  Flange gasket:
  Fiber, non asbestos

  Pressure tube:
  Stainless steel
  X5CrNi18-10, EN 10088 / AISI 304, A276

  O-ring:
  Neoprene (Cloroprene)

  Gasket between pressure tube and housing
  Aluminium

  Electrical switch box:
  Shock resistant polycarbonate
  CT-661-T

- *Electrical data*
  - **Change over Micro (SPDT) switch**
    250 V AC / 10 A
    30 V DC / 5 A
    Normally Open (NO) and Normally Closed (NC) function
  - **DIN Plug**
    DIN 43650 connection
    PG 11, 8 – 10 mm / 0.31 – 0.39”
    Screw terminal 1.5 mm^2 (16 AWG)
    3+PE
- *Liquid level differential*
  Variable between 12.5 mm to 50 mm (½" to 2") in 12.5 mm (½") increments. Required diffferential setting should be made prior to installation.
  Factory set at 50 mm (2").
- *Enclosure*
  IP 65
- *Weight (including flanges)*
  9.75 kg / 21.5 lb
- *Approvals*
  CE – for further details please see instruction.

Design

AKS 38 is an electro-mechanical liquid level switch.

The design is based on a mechanical float, which will operate in the refrigerant. When the set level is reached an electrical volt free micro (SPDT) switch will be activated.

The microswitch is located in the switch box which has a clear front cover and allows viewing of the switch position. The micro- switch is fully isolated from the refrigeration system and operates by means of a magnet.

AKS 38 is supplied with a DIN plug for the electrical connections. The microswitch provides volt free contacts to open / close solenoid valves or energise / de-energise contactors for the starting / stopping refrigerant pumps / compressors.

Can be used as a device for acoustic alarms / switches for visual indication when there is a danger of high or low liquid level.

The switch box can be placed in any position on top of the float housing for easy installation and can be replaced without any interference with the refrigeration system.
Flanges are included.

Function

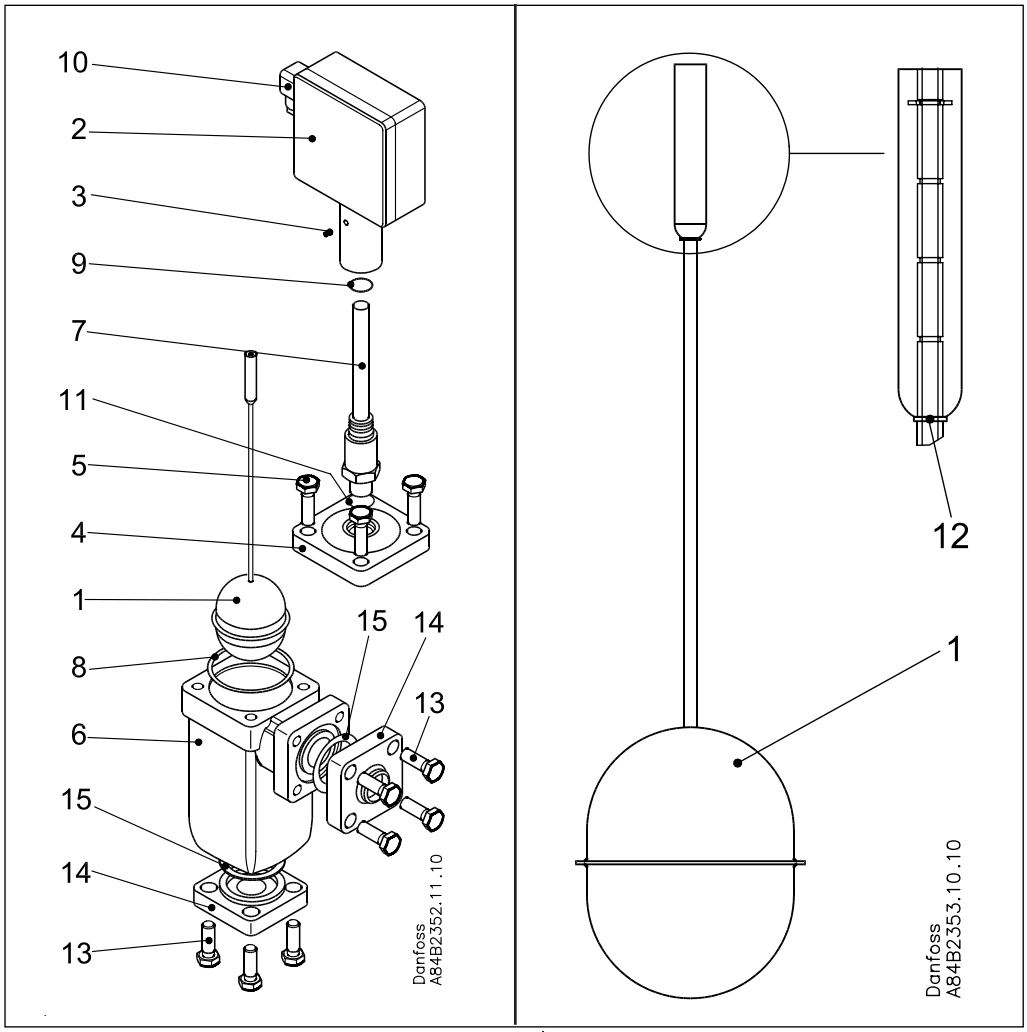

1 Internal float assembly
2 Switch box
3 M4x8 pinol tailstock screw
4 Top cover
5 4 pcs M12x35 stainless steel bolts
6 AKS 38 housing
7 Pressure tube
8 Top cover gasket
9 O-ring for pressure tube
10 DIN-plug for electrical connection
11 Aluminium gasket
12 Locking ring for internal float
13 Stainless steel bolts
14 Flanges
15 Flange gaskets

AKS 38 incorporates an internal float assembly (1), which will operate directly in accordance with the refrigerant level.

The internal float will follow the liquid level vertically up and down.

The upper part of the internal float assembly moves within the pressure tube (7).

At a specific switch point the upper part of the internal float assembly will via a magnet activate the electrical microswitch in the switch box (2).

A volt free signal can be detected by wiring to terminals at the DIN-plug (10). The actual switch point can be adjusted by means of a locking ring (12) before installation.

Function

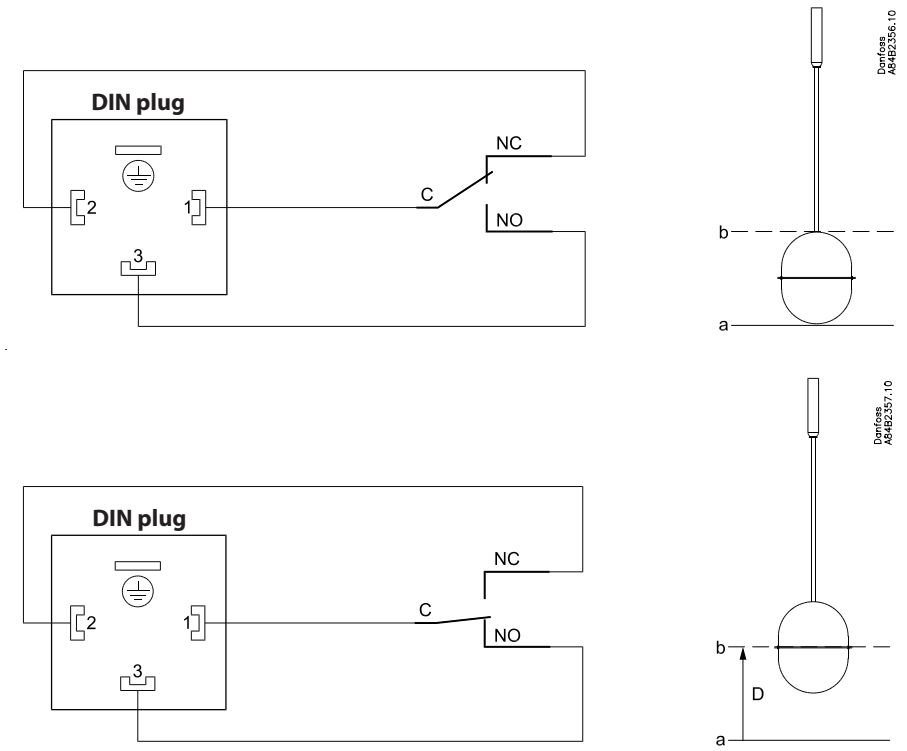

Differential (D) = Variable between 12.5 mm (½") to 50 mm (2") in 12. 5 mm (½") increments.

Application

For the control and detection of liquid levels in: -

- Liquid over-feed accumulators.
- Flooded surge drums.
- Flooded shell & tube chillers.
- High and low pressure receivers.
- Inter coolers.
- Use as low / high level switch to protect circulating pumps / compressors.

Ordering

Type	Code No.
AKS 38 Butt Weld, DIN DN 25 (1 in.)	**148H3194**
AKS 38 Butt Weld, ANSI DN 25 (1 in.)	**148H3204**
AKS 38 Socket Weld, ANSI DN 20 (3/4 in.)	**148H3205**
AKS 38 Socket Weld, ANSI DN 25 (1 in.)	**148H3206**
AKS 38 FPT, NPT DN 20 (3/4 in.)	**148H3207**

Dimensions

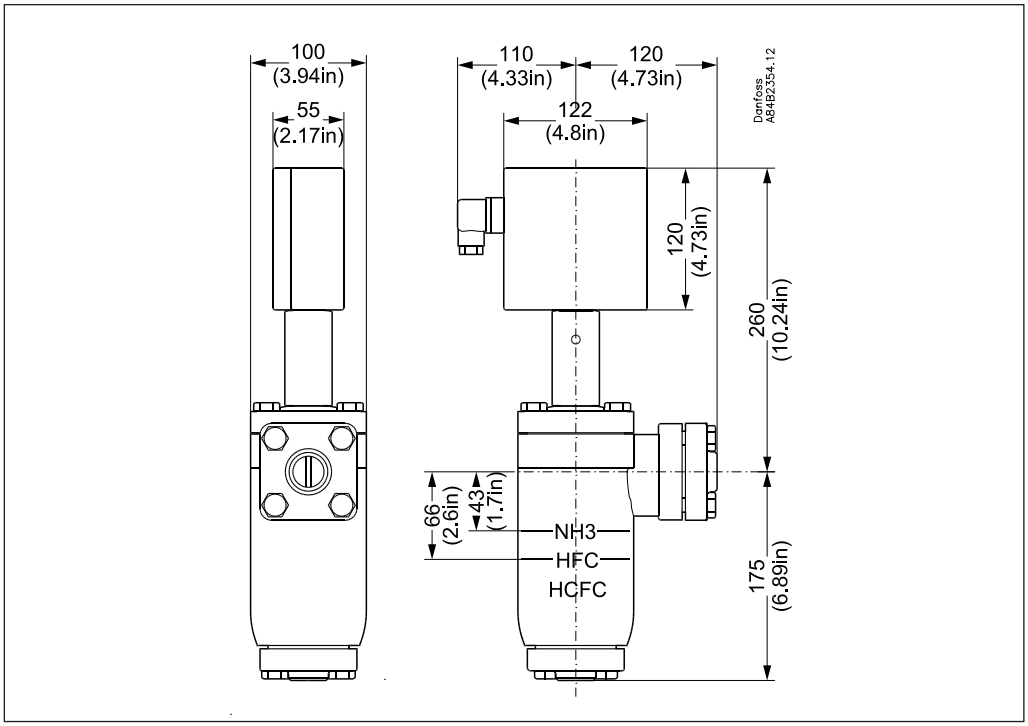

Spare parts

Type	Code no.
Repair kit:	**148H3200**
Top cover gasket	
O-ring for pressure tube	
Alu. gasket	
Flange gasket	
Locking ring for internal float	
Internal float assembly	**148H3203**
Electrical switch box	**148H3202**
Flanges:	
AKS 38 Butt Weld, DIN DN 25 (1 in.)	**027N1026**
AKS 38 Butt Weld, ANSI DN 25 (1 in.)	**027N2023**
AKS 38 Socket Weld, ANSI DN 20 (3/4 in.)	**027N2012**
AKS 38 Socket Weld, ANSI DN 25 (1 in.)	**027N2013**
AKS 38 FPT, NPT DN 20 (3/4 in.)	**027G1007**
Please observe: Same flanges as for NRVA 25 and NRVA 32	

Danfoss can accept no responsibility for possible errors in catalogues, brochures and other printed material. Danfoss reserves the right to alter its products without notice. This also applies to products already on order provided that such alterations can be made without subsequential changes being necessary in specifications already agreed.
All trademarks in this material are property of the respective companies. Danfoss and the Danfoss logotype are trademarks of Danfoss A/S. All rights reserved.