ENGINEERING
TOMORROW

Installation guide

Thermostatic expansion valve
Type TR 6

067R9508

Refrigerants:	**Max. working pressure:**	**Max. test pressure:**
R22/R407C and R410A	PS / MWP = 42 bar / 610 psig	47 bar / 680 psig

067R9508

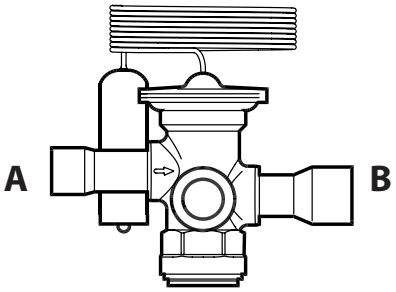

Fixed setting

Flow direction:

Normal: A → B

Reverse: B → A

$Q_{nom.}$ A → B [kW / TR] = 100%
$Q_{nom.}$ B → A [kW / TR] = 80%

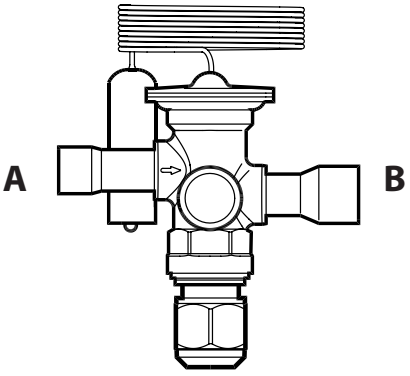

Adjustable setting

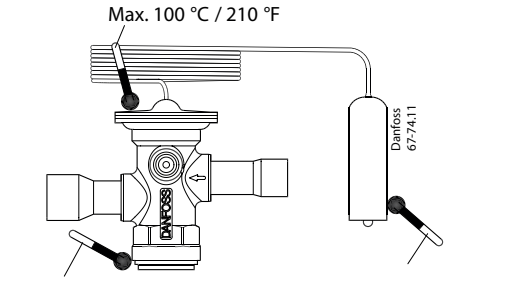

R22 / R407C: Max. 100 °C / 210 °F
R410A: Max. 75 °C / 167 °F

Short-lived peak 150 °C / 300 °F

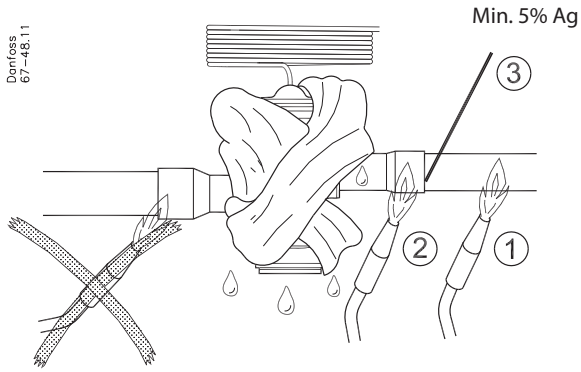

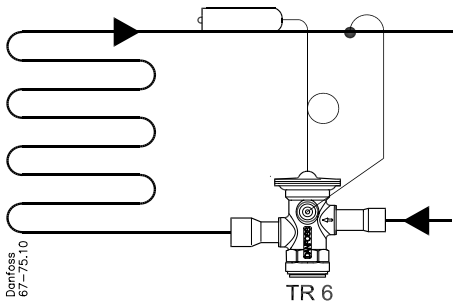

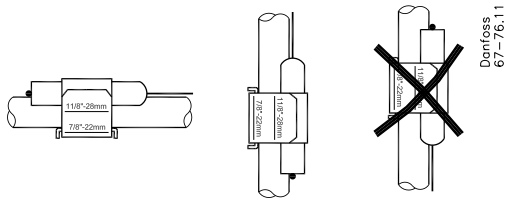

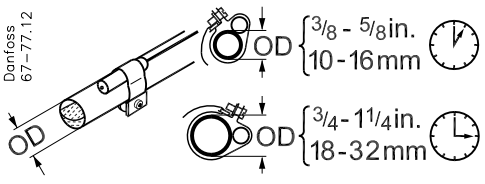

© Danfoss I DCS (sw) I 2015.12

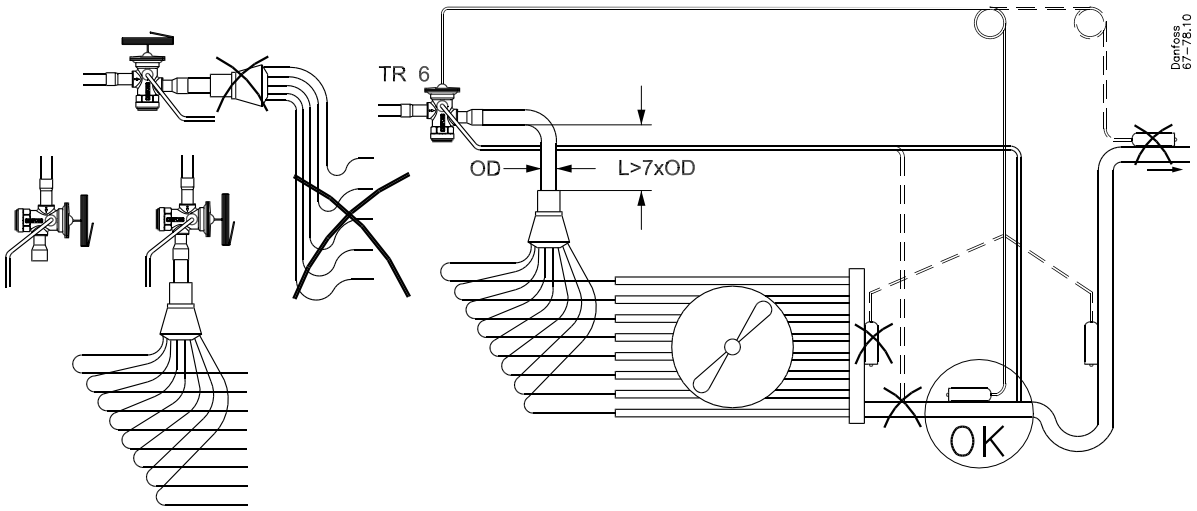

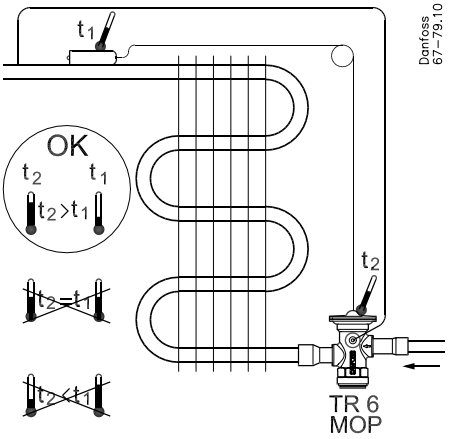

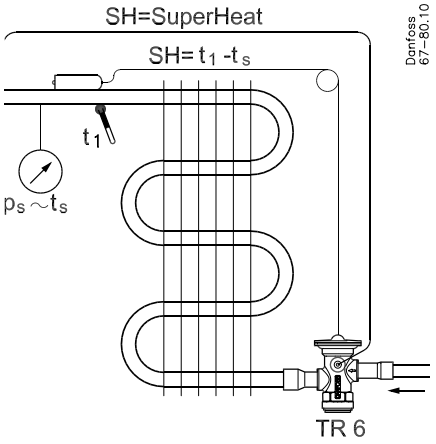

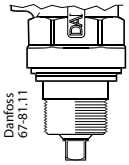

= 19 mm / $^{3}/_{4}$ in.

Torque = 10 Nm / 7 ft-lb

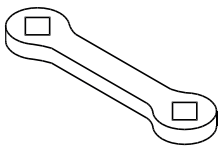

⊿ **SH / 1 turn / 360 °** ≈
R22 / R407C: 1.0 °C / 1.8 °F
R410A: 0.8 °C / 1.1 °F

Factory setting
SS = 2 °C / 3.6 °F or according to customer specification

Refrigerant	Number of turns from SS to **tight** spring	Number of turns from SS to **loose** spring
R22 / R407C	+7.25	–4.25
R410A	+9.5	–2