Contents

This chapter is divided into four sections:

Page

Household compressors – general information 3
Household compressors – how to handle 21
Household compressors – special requirements for R290 systems 39
Commercial compressors – general information 49

Notes

Contents

Page

1.0 General ... 4
2.0 Compressor ... 4
2.1 Denomination ... 5
2.2 Low and High starting torque ... 6
2.3 Motor protector and winding temperature ... 6
2.4 Rubber grommets ... 6
2.5 Minimum ambient temperature ... 6
3.0 Compressor check-up ... 7
3.1 Winding protector cut-out ... 7
3.2 PTC and protector interaction ... 7
3.3 Check of winding protector and resistance ... 7
4.0 Opening the refrigerating system ... 7
4.1 Flammable refrigerants ... 8
5.0 Mounting ... 8
5.1 Connectors ... 8
5.2 Drifting out connectors ... 10
5.3 Tube adaptors ... 10
5.4 Brazing alloy ... 10
5.5 Soldering ... 11
5.6 LOKRING connections ... 12
5.7 Driers ... 12
5.8 Driers and refrigerants ... 13
5.9 Capillary tube in drier ... 13
6.0 Electrical equipment ... 14
6.1 LST starting device ... 14
6.2 HST starting equipment ... 15
6.3 HST CSR starting equipment ... 17
6.4 Equipment for SC twin compressors ... 17
6.5 Electronic unit for variable speed compressors ... 18
7.0 Evacuation ... 18
7.1 Vacuum pumps ... 19
8.0 Charging of refrigerant ... 19
8.1 Maximum refrigerant charge ... 19
8.2 Closing the process tube ... 19
9.0 Testing ... 20
9.1 Testing of the appliance ... 20

1.0 General

When a compressor has to be installed in new appliances normally sufficient time is available to choose the right compressor type from datasheets and make sufficient testing. Contrary when a faulty compressor has to be replaced it can in many cases be impossible to get the same compressor type as the original. In such cases it is necessary to compare relevant compressor catalogue data.

Long lifetime for a compressor can be expected if the service work is done in the right way and cleanness and dryness of the components are taken into consideration.

The service technician has to observe the following when choosing a compressor. Type of refrigerant, voltage and frequency, application range, compressor displacement/ capacity, starting conditions and cooling conditions.

If possible use the same refrigerant type as in the faulty system.

2.0 Compressor

The programme of Danfoss compressors consists of the basic types P, T, N, F, SC, SC Twin and GS.

Danfoss 220 V compressors have a yellow label with information of the type designation, voltage and frequency, application, starting conditions, refrigerant and code number.

The 115 V compressors have a green label.

LST/HST mentioned both means that the starting characteristics are depending on the electrical equipment.

Am0_0024

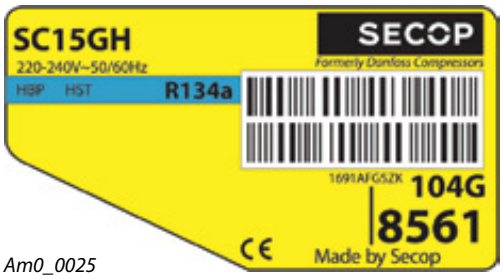

Am0_0025

If the type label has been destroyed, the compressor type and the code number can be found in the stamping on the side of the compressor.

See picture Am0_0025b

Composition of line 1:
H4485: Compressor type information
(e.g. 102H4485 = H4485)

C: internal code

Composition of line 2:
Production date
(week, year, day, hour e.g. 051D11)

Am0_0025b

2.1 Denomination

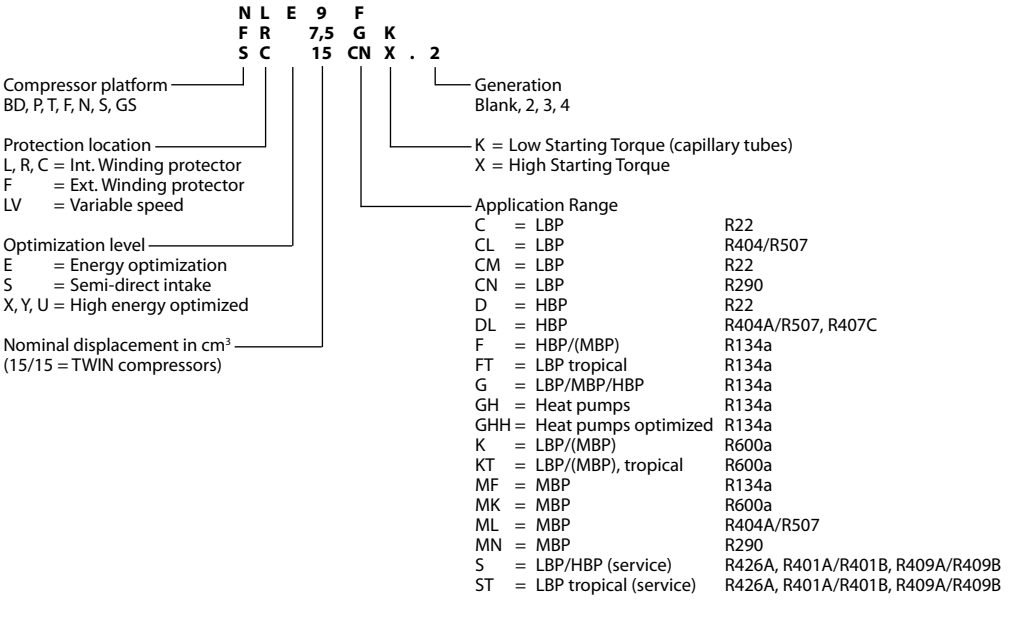

The first letter of the denomination (P, T, N, F, S or G) indicates compressor series whereas the second letter indicates motor protection placing.

E, U, Y and X mean different energy optimization steps. S means semi direct suction. V means variable speed compressors. On all these mentioned types the indicated suction connector has to be used. Using the wrong connector as suction connector will lead to reduced capacity and efficiency.

A number indicates the displacement in cm^3, but for PL compressors the number indicates the nominal capacity.

The letter after the displacement indicates which refrigerant must be used as well as the field of application for the compressor. (See example) LBP (Low Back Pressure) indicates the range of low evaporating temperatures, typically -10°C down to -35°C or even -45°C, for use in freezers and refrigerators with freezer compartments.

MBP (Medium Back Pressure) indicates the range of medium evaporating temperatures, typically -20°C up to 0°C, such as in cold cabinets, milk coolers, ice machines and water coolers.

HBP (High Back Pressure) indicates high evaporating temperatures, typically -5°C up to +15°C, such as in dehumidifiers and some liquid coolers.

T as extra character indicates a compressor intended for tropical application. This means high ambient temperatures and capability of working with more unstable power supply.

The final letter in the compressor denomination provides information on the starting torque. If, as principal rule, the compressor is intended for LST (Low Starting Torque) and HST (High Starting Torque), the place is left empty. The starting characteristics are depending on the electrical equipment chosen.

K indicates LST (capillary tube and pressure equalization during standstill) and X indicates HST (expansion valve or no pressure equalization).

2.2 Low and High starting torque

Description of the different electrical equipments shown can be found in the datasheets for the compressors. See also section 6.0.

Low starting torque (LST) compressors must only be used in refrigerating systems having capillary tube throttling device where pressure equalization is obtained between suction and discharge sides during each standstill period.

A PTC starting device (LST) requires that the standstill time is at least 5 minutes, since this is the time necessary for cooling the PTC.

The HST starting device, which gives the compressor a high starting torque, must always be used in refrigeration systems with expansion valve, and for capillary tube systems without full pressure equalization before each start.

High stating torque (HST) compressors are normally using a relay and starting capacitor as starting device.

The starting capacitors are designed for short time cut-in.

"1.7% ED", which is stamped onto the starting capacitor, means for instance max. 10 cut-ins per hour each with a duration of 6 seconds.

2.3 Motor protector and winding temperature

Most of the Danfoss compressors are equipped with a built-in motor protector (winding protector) in the motor windings. See also section 2.1.

At peak load the winding temperature must not exceed 135°C and at stable conditions the winding temperature must not exceed 125°C. Specific information on some special types can be found in the collection of data sheets.

2.4 Rubber grommets

Stand the compressor on the base plate until it is fitted.

This reduces the risk of oil coatings inside the connectors and associated brazing problems.

Place the compressor on its side with the connectors pointing upwards and then fit the rubber grommets and grommet sleeves on the base plate of the compressor.

Do not turn the compressor upside down.

Mount the compressor on the baseplate of the appliance.

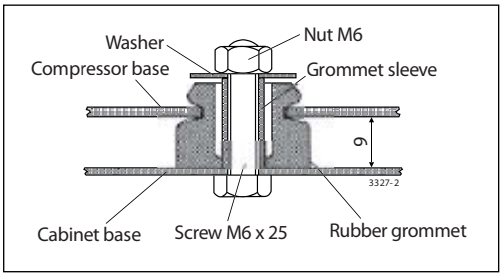

Am0_0026

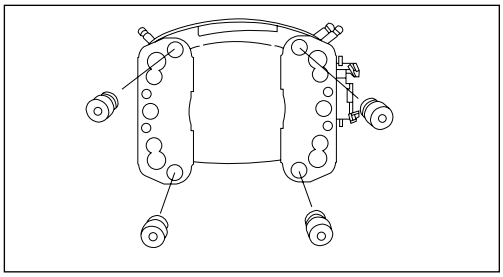

Am0_0027

2.5 Minimum ambient temperature

Allow the compressor to reach a temperature above 10°C before starting the first time to avoid starting problems.

3.0 Compressor check-up

If the compressor does not operate, it could have many reasons. Before replacing the compressor, it should be made sure, that it is defect.

For easy failure location, please see the section "Trouble shooting".

3.1 Winding protector cut-out

If the winding protector cuts out while the compressor is cold, it can take approx 5 minutes for the protector to reset.

If the winding protector cuts out while the compressor is warm (compressor housing above 80°C) the resetting time is increased. Up to approx 45 minutes may pass before reset.

3.2 PTC and protector interaction

The PTC starting unit requires a cooling time of 5 minutes before it can restart the compressor with full starting torque.

Short time power supply cut offs, not long enough to allow the PTC to cool down, can result in start failure for up to 1 hour.

The PTC will not be able to provide full action during the first protector resets, as they typically do not allow pressure equalization also. Thus the protector trips until the reset time is long enough.

This mismatch condition can be solved by unplugging the appliance for 5 to 10 minutes typically.

3.3 Check of winding protector and resistance

In the event of compressor failure a check is made by means of resistance measurement directly on the current lead-in to see whether the defect is due to motor damage or simply a temporarily cut out of the winding protector.

If tests with resistance measurement reveal a connection through the motor windings from point M to S of the current lead-in, but broken circuit between point M and C and S and C this indicates that the winding protector is cut out. Therefore, wait for resetting.

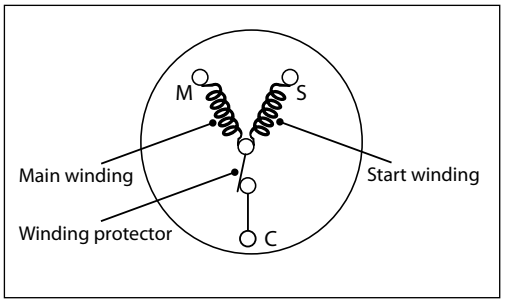

Am0_0028

4.0 Opening the refrigerating system

Never open a refrigerating system before all components for the repair are available.

Compressor, drier and other system components must be sealed off until a continuous assembly can occur.

Opening a defect system must be done in different ways depending on the refrigerant used.

Fit a service valve to the system and collect the refrigerant in the right way.

If the refrigerant is flammable it can be released outside in the open air through a hose if the amount is very limited.

Then flush the system with dry nitrogen.

4.1 Flammable refrigerants

R600a and R290 are hydrocarbons. These refrigerants are flammable and are only allowed for use in appliances which fulfil the requirements laid down in the latest revision of EN/IEC 60335-2-24. (To cover potential risk originated from the use of flammable refrigerants).

Consequently, R600a and R290 are only allowed to be used in appliances designed for this refrigerant and fulfil the above-mentioned standard. R600a and R290 are heavier than air and the concentration will always be highest at the floor. The flammability limits are approx. as follows:

Refrigerant	R600a	R290
Lower limit	1.5% by vol. (38 g/m³)	2.1% by vol. (39 g/m³)
Upper limit	8.5% by vol. (203 g/m³)	9.5% by vol. (177 g/m³)
Ignition temperature	460°C	470°C

In order to carry out service and repair on R600a and R290 systems the service personnel must be properly trained to be able to handle flammable refrigerants.

This includes knowledge on tools, transportation of compressor and refrigerant, and the relevant regulations and safety precautions when carrying out service and repair.

Do not use open fire when working with refrigerants R600a and R290!

Danfoss compressors for the flammable refrigerants R600a and R290 are equipped with a yellow warning label as shown.

The smaller R290 compressors, types T and N, are LST types. These often need a timer to ensure sufficient pressure equalization time.

For further information, please see the section "Practical Application of Refrigerant R290 Propane in Small Hermetic Systems".

Am0_0029

Am0_0030

5.0 Mounting

Soldering problems caused by oil in the connectors can be avoided by placing the compressor on its base plate some time before soldering it into the system.

The compressor must never be placed upside down. The system should be closed within 15 minutes to avoid moisture and dirt penetration.

5.1 Connectors

The positions of connectors are found in the sketches. "C" means suction and must always be connected to the suction line.

"E" means discharge and must be connected to the discharge line. "D" means process and is used for processing the system.

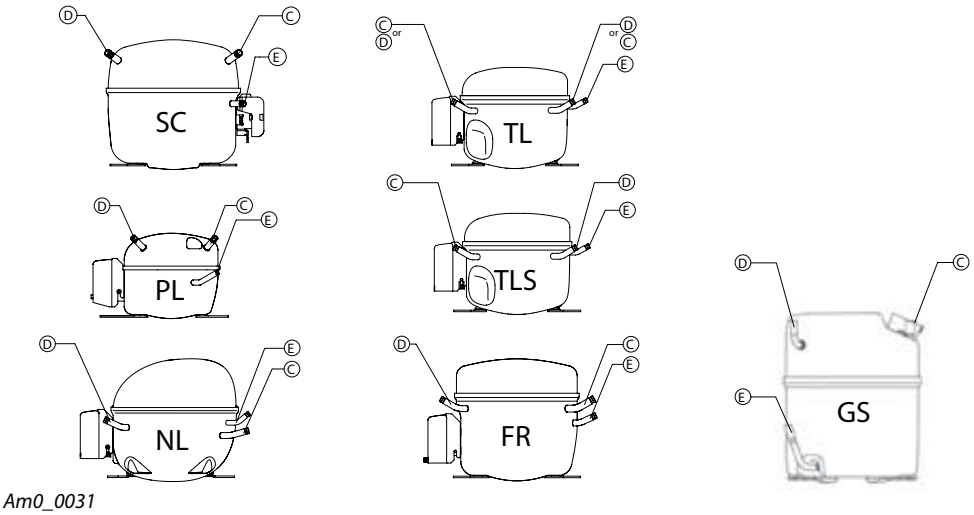

Am0_0031

5.1
Connectors
(continued)

Most Danfoss compressors are equipped with tube connectors of thick-walled, copper-plated steel tube which have a solderability which comes up to that of conventional copper connectors.

The connectors are welded into the compressor housing and weldings cannot be damaged by overheating during soldering.

The connectors have an aluminium cap sealing (capsolut) which gives a tight sealing. The sealing secures that the compressors have not been opened after leaving Danfoss' production lines. In addition to that, the sealing makes a protecting charge of nitrogen superfluous.

The capsoluts are easily removed with an ordinary pair of pliers or a special tool as shown. The capsolut cannot be remounted. When the seals on the compressor connectors are removed the compressor must be mounted in the system within 15 minutes to avoid moisture and dirt penetration.

Capsolut seals on connectors must never be left in the assembled system.

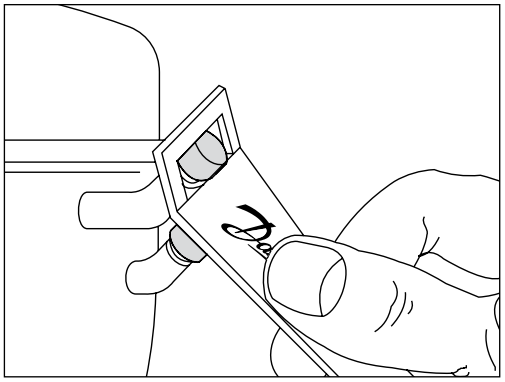

Am0_0032

Oil coolers, if mounted (compressors from 7 cm^3 displacement), are made of copper tube and the tube connectors are sealed with rubber plugs. An oil-cooling coil must be connected in the middle of the condenser circuit.

SC Twin compressors must have a check valve in the discharge line to compressor no. 2. If a change in the starting sequence between compressor no. 1 and no. 2 is wanted a check valve has to be placed in both discharge lines.

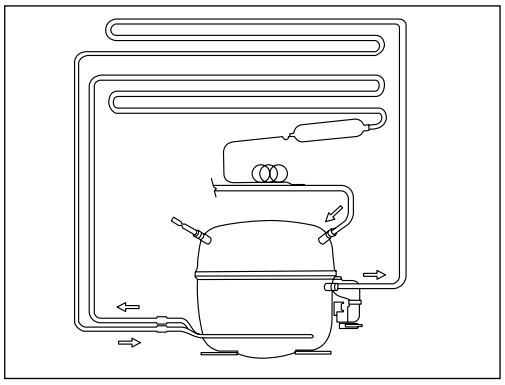

Am0_0033

In order to have optimum conditions for soldering and to minimize the consumption of soldering material, all tube connectors on Danfoss compressors have shoulders, as shown.

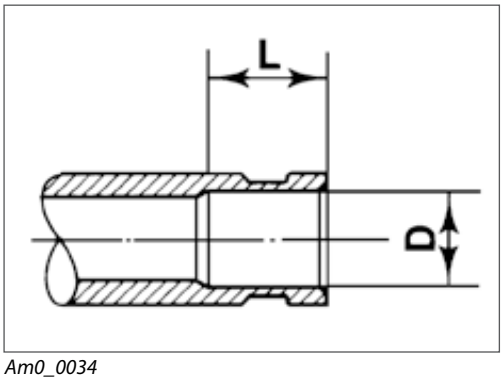

Am0_0034

5.2 Drifting out connectors

It is possible to drift out the connectors having inside diameters from 6.2 mm to 6.5 mm which suit 1/4" (6.35 mm) tube, but we advise against drifting out the connectors by more than 0.3 mm.

During drifting it is necessary to have a suitable counterforce on the connectors so that they don't break off.

A different solution to this problem would be to reduce the diameter of the end of the connector tube with special pliers.

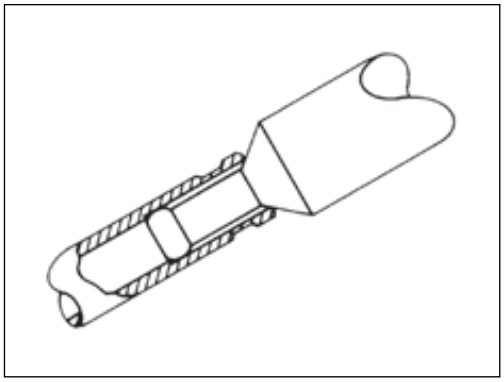

Am0_0035

5.3 Tube adaptors

Instead of drifting out the connectors or reducing the diameter of the connection tube, copper adapter tubes can be used for service.
A 6/6.5 mm adaptor tube can be used where a compressor with millimetre connectors (6.2 mm) is to be connected to a refrigerating system with 1/4" (6.35 mm) tubes.

A 5/6.5 mm adaptor tube can be used where a compressor with a 5 mm discharge connector is to be connected to a 1/4" (6.35 mm) tube.

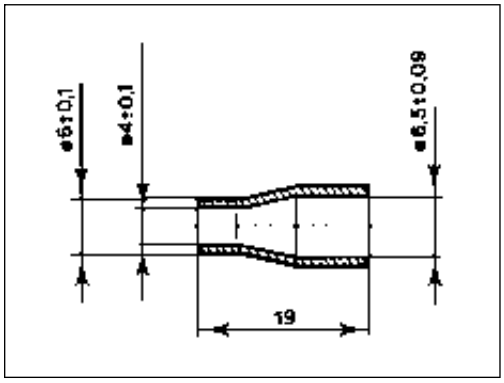

Am0_0036

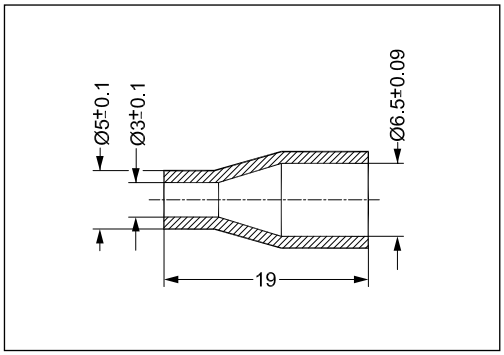

Am0_0037

5.4 Brazing alloy

For soldering the connectors and copper tubes solders having a silver content as low as 2% can theoretically be used but with 15% is preferred. This means that the so-called phosphor solders can also be used when the connecting tube is made of copper.

If the connecting tube is made of steel, a solder with high silver content which does not contain phosphor and which has a liquidus temperature below 740°C is required. For this also a flux is needed.

5.5 Soldering

The following are guidelines for soldering of steel connectors different from soldering copper connectors.

During heating, the temperature should be kept as close to the melting point of the solder as possible.

Overheating will lead to surface damage, so decreasing the chances of good soldering.

Use the "soft" heat in the torch flame when heating the joint.

Distribute the flame so at least 90% of the heat concentrates around the connector and approx. 10% around the connecting tube.

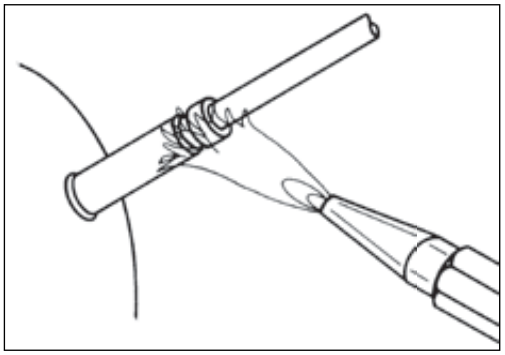

Am0_0038

When the connector is cherry-red (approx. 600°C) apply the flame to the connecting tube for a few seconds.

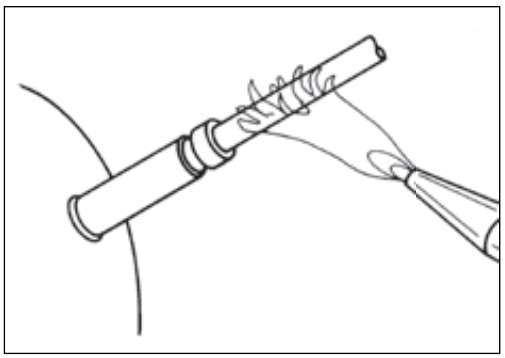

Am0_0039

Continue heating the joint with the "soft" flame and apply solder.

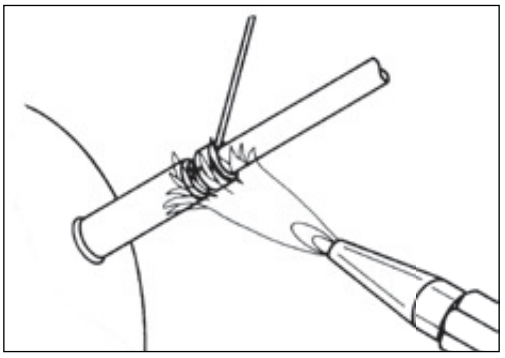

Am0_0040

Draw the solder down into the solder gap by slowly moving the flame towards the compressor then completely remove the flame.

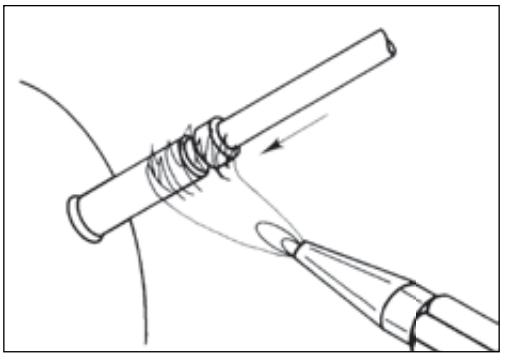

Am0_0041

5.6 LOKRING connections

System containing the flammable refrigerants R600a or R290 must not be soldered. In such cases a LOKRING connection as shown can be used.
Newly made systems can be soldered as usual, as long as they have not been charged with flammable refrigerant.

Charged systems are never to be opened by use of the flame. Compressors from systems with flammable refrigerant have to be evacuated to remove the refrigerant residues from the oil.

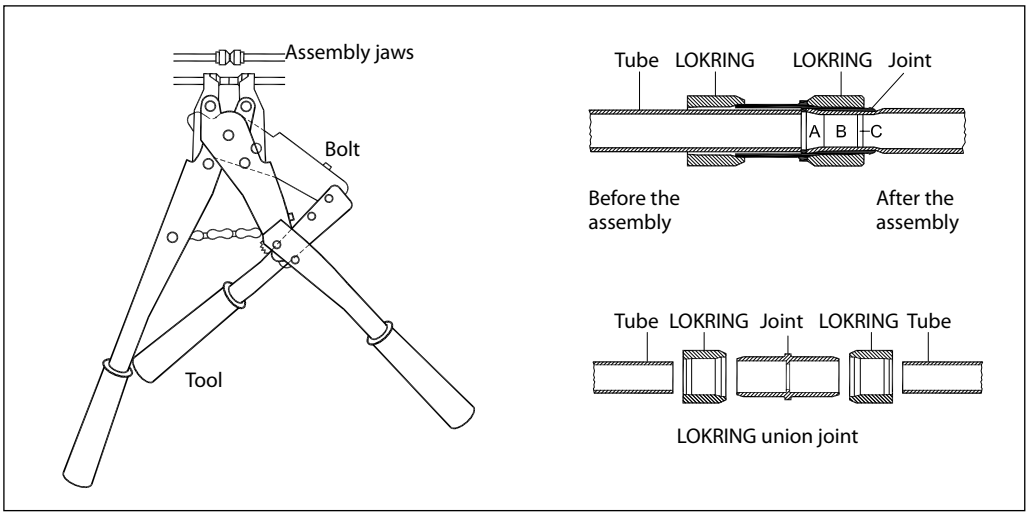

Am0_0042

5.7 Driers

Danfoss compressors are expected to be used in well-dimensioned refrigerant systems including a drier containing an adequate amount and type of desiccant and with a suitable quality.

The refrigerating systems are expected to have a dryness corresponding to 10 ppm. As a max limit 20 ppm is accepted.

The drier must be placed in a way ensuring that the direction of flow of the refrigerant follows gravitation.

Thus the MS beads are prevented from moving among themselves and in this way making dust and possible blockage at the inlet of the capillary tube. At capillary tube systems this also ensures a minimal pressure equalizing time.

Especially pencil driers should be chosen carefully to ensure proper quality. In transportable systems only driers approved for mobile application are to be used.

A new drier must always be installed when a refrigeration system has been opened.

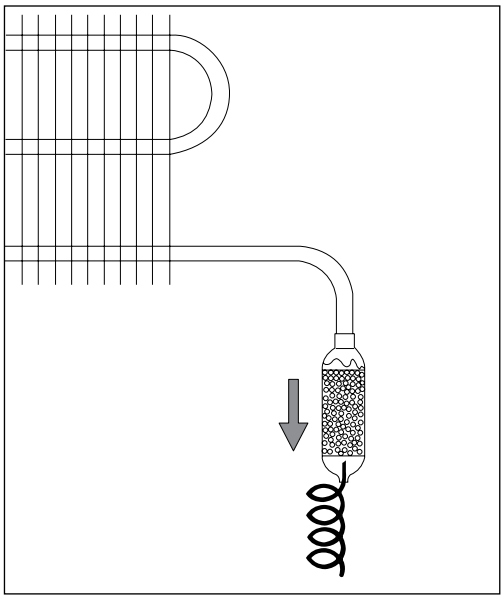

Am0_0043

5.8 Driers and refrigerants

Water has a molecular size of 2.8 Ångström. Accordingly, Molecular Sieves with a pore size of 3 Ångström will be suitable for normally used refrigerants.

MS with a pore size of 3 Ångström can be supplied by the following,

UOP Molecular Sieve Division (former Union Carbide) 25 East Algonquin Road, Des Plaines Illinois 60017-5017, USA	**4A-XH7**	**4A-XH9**
R22, R502	×	×
R134a	×	×
HFC/HCFC blends		×
R290, R600a	×	×

Grace Davison Chemical W.R.Grace & Co, P.O.Box 2117, Baltimore Maryland 212203 USA	**"574"**	**"594"**
R22, R502	×	×
R134a	×	×
HFC/HCFC blends		×
R290, R600a		×

CECA S.A La Defense 2, Cedex 54, 92062 Paris-La Defense France	**NL30R**	**Siliporite H3R**
R22, R502	×	×
R134a	×	×
HFC/HCFC blends		×
R290, R600a		×

Driers with the following amount of desiccants are recommended.

Compressor	**Drier**
PL and TL	6 gram or more
FR and NL	10 gram or more
SC	15 gram or more

In commercial systems larger solid core driers are often used. These are to be used for the refrigerants according to the manufacturers instructions. If a burn-out filter is needed in a repair case, please contact the supplier for detail information.

5.9 Capillary tube in drier

Special care should be taken when soldering the capillary tube. When mounting the capillary tube it should not be pushed too far into the drier, thus touching the gaze or filter disc, causing a blockage or restriction. If, on the other hand, the tube is only partly inserted into the drier, blockage could occur during the soldering.

This problem can be avoided by making a "stop" on the capillary tube with a pair of special pliers as shown.

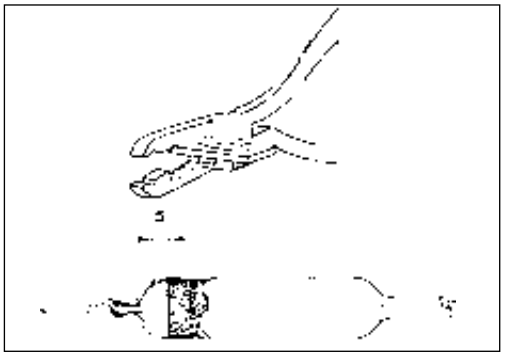

Am0_0044

6.0 Electrical equipment

For information on the right starting devices, please see Datasheets for the compressor. Never use a starting device of and old compressor, because this may cause a compressor failure.

No attempt must be made to start the compressor without the complete starting equipment. For safety reasons the compressor must always be earthed or otherwise additionally protected. Keep away inflammable material from the electrical equipment.

The compressor must not be started under vacuum.

6.1 LST starting device

Compressors with internal motor protector.
The below drawings show three types of devices with PTC starters.

Mount the starting device on the current lead-in of the compressor.

Pressure must be applied to the centre of the starting device so that the clips are not deformed.

Mount the cord relief on the bracket under the starting device.

On some energy optimized compressors a run capacitor is connected across the terminals N and S for lower power consumption.

Pressure must be applied to the centre of the starting device when dismantling so that the clips are not deformed.

Place the cover over the starting device and screw it to the bracket.

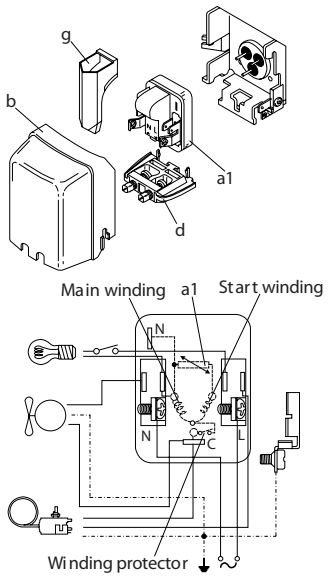

Am0_0045

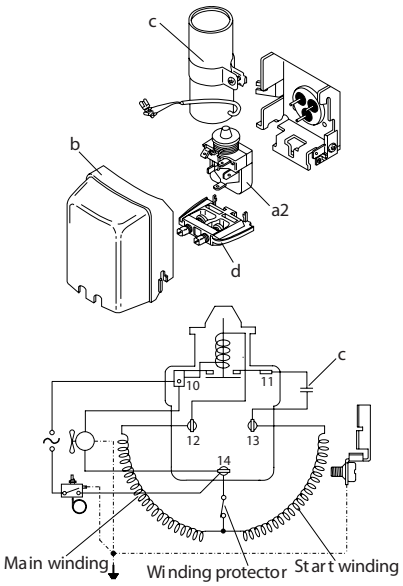

Am0_0046

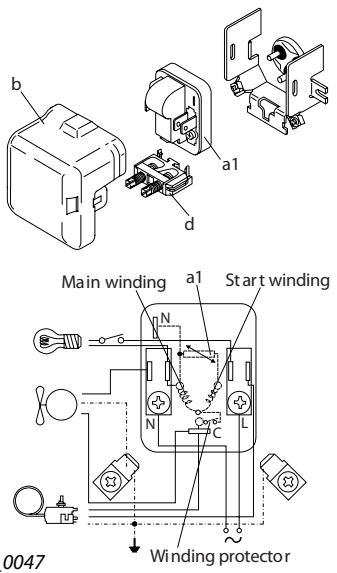

Am0_0047

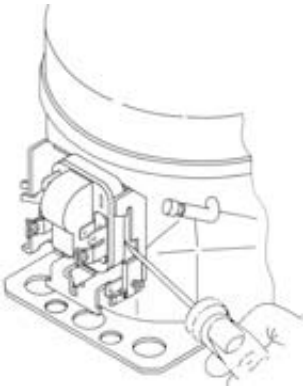

Am0_0048

6.1 LST starting device *(continued)*

Compressors with external motor protector.
The below drawings show equipment with relay and motor protector.

Mounting of the relay is also done by applying pressure on the center of the relay.
The cover is fixed with a clamp.

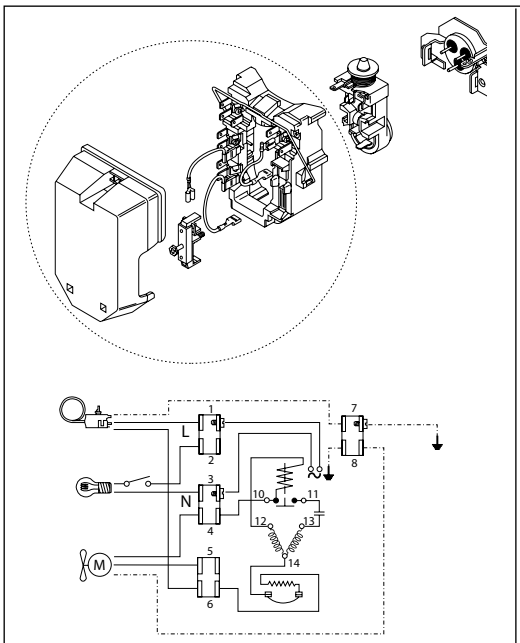

Am0_0049

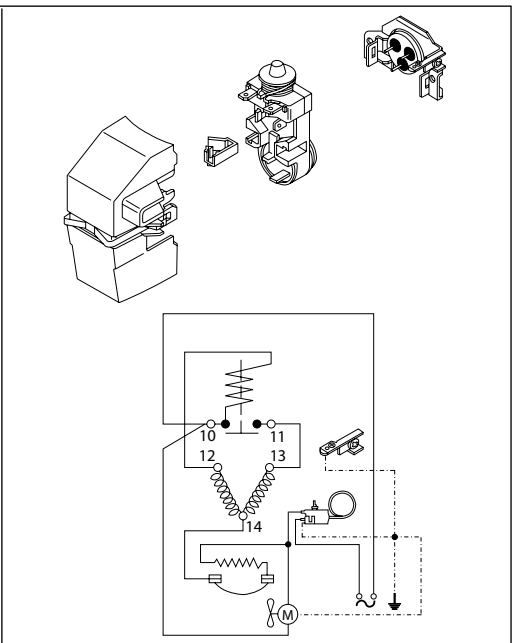

Am0_0050

The below drawing shows equipment with PTC and external protector.

The protector is placed on the bottom terminal pin and the PTC on the 2 on the top.

The cover is fixed with a clamp. No cord relief is available for this equipment.

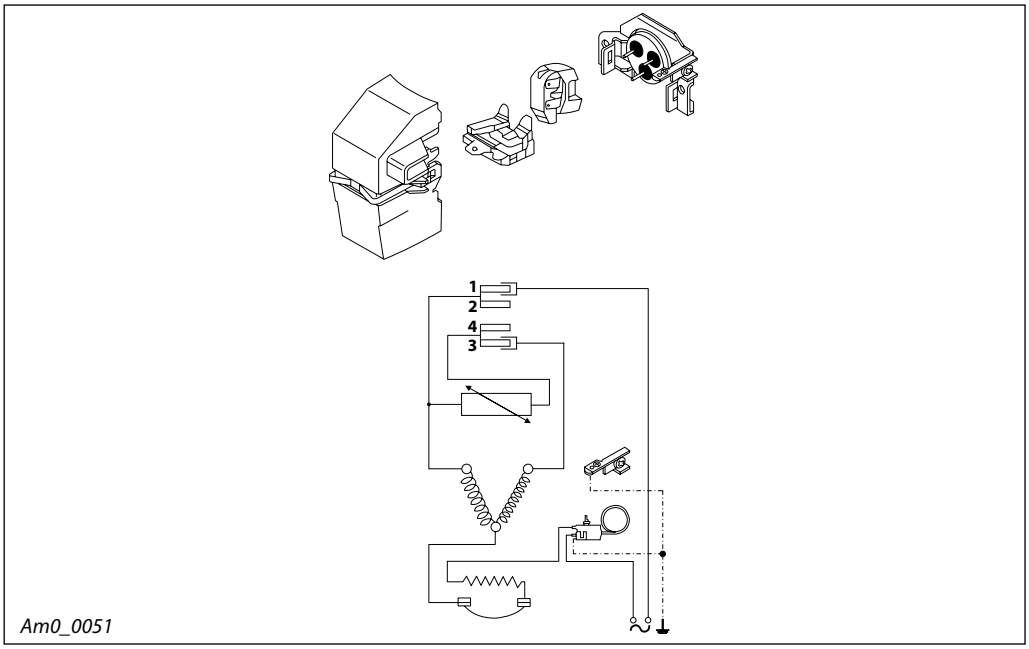

Am0_0051

6.2 HST starting equipment

The next drawings show five types of devices with relays and starting capacitor.

Mount the starting relay on the current lead-in on the compressor. Apply pressure to the centre of the starting relay to avoid deforming the clips. Fasten the starting capacitor to the bracket on the compressor.

Mount the cord relief in the bracket under the starting relay. (Fig. A and B only).

Place the cover over the starting relay and screw it to the bracket or lock it in position with the locking clamp, or the integrated hooks.

6.2
HST starting equipment
(continued)

A

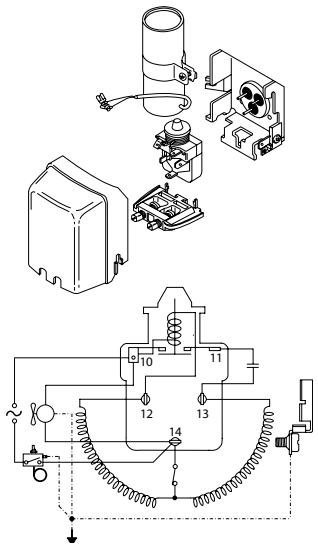

Am0_0052

B

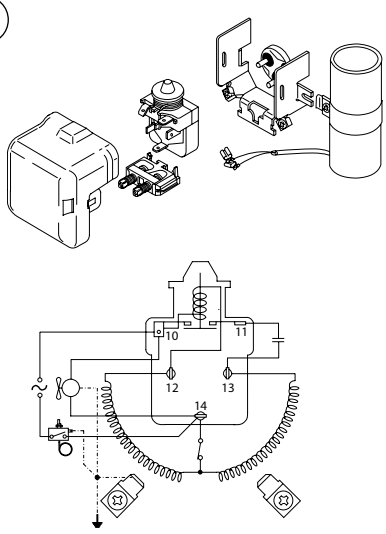

Am0_0053

C

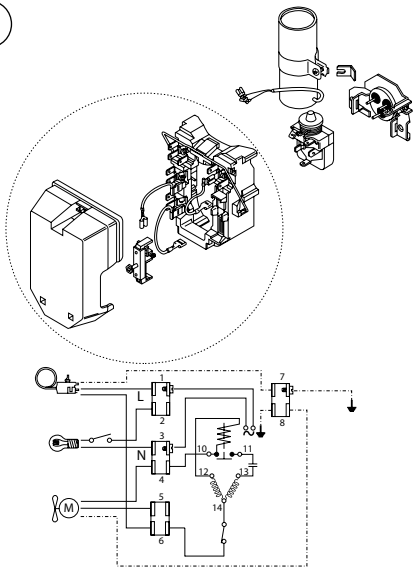

Am0_0054

D

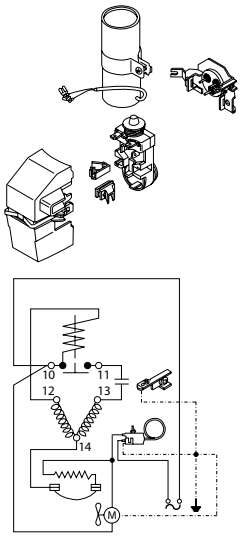

Am0_0055

E

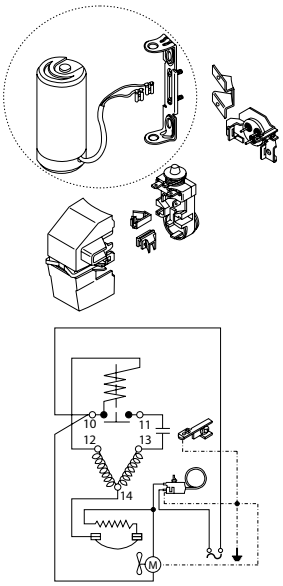

Am0_0056

F

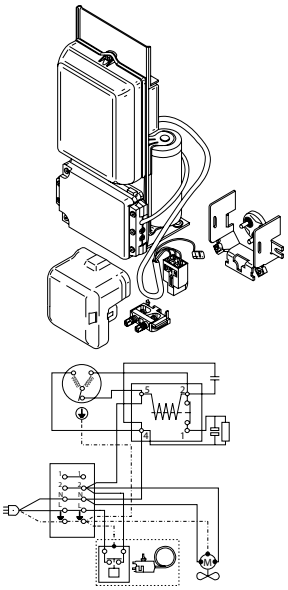

Am0_0057

6.3
HST CSR starting equipment

Mount the terminal box on the current lead-in.
Note that the leads must face upwards.
Mount the cord relief in the bracket under terminal box. Place the cover. (See fig. F).

6.4
Equipment for SC twin compressors

The use of a time delay (e.g. Danfoss 118U0082) is recommended for starting the second section (15 seconds time delay).

If time delay is used, the connection on the terminal board between L and 1 must be removed from the compressor no. 2 connection box.

If thermostat for capacity control is used, the connection on the terminal board between 1 and 2 must be removed.

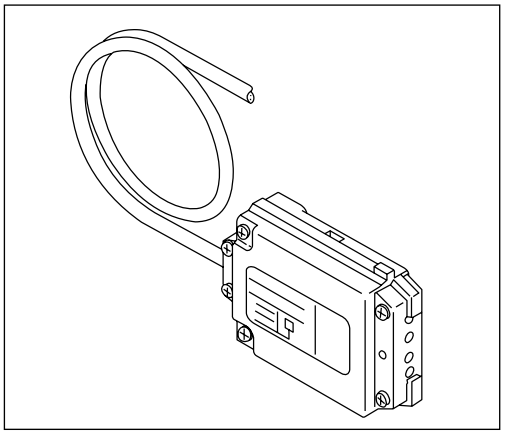

Am0_0058

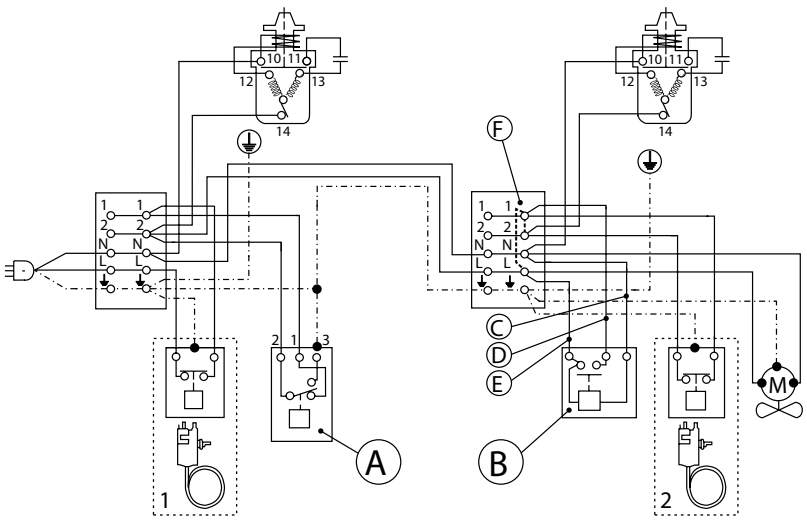

Am0_0059

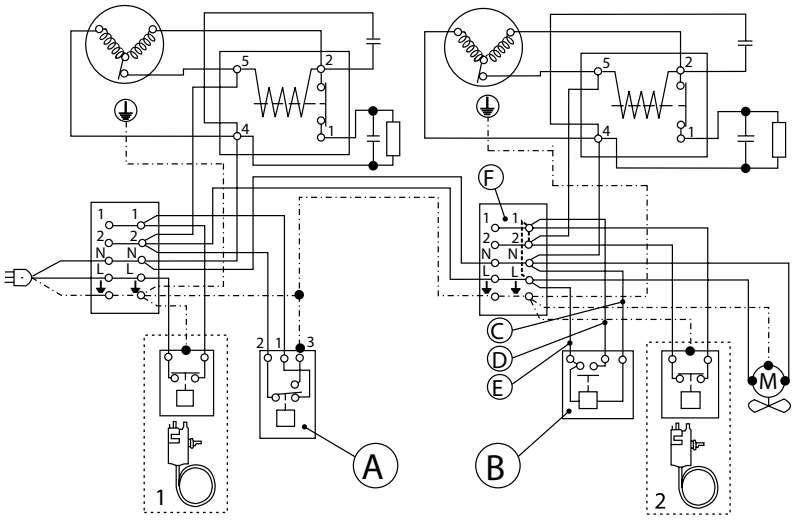

Am0_0060

A: Safety pressure control
B: Time delay relay
C: Blue
D: Black
E: Brown
F: Remove wire L-1 if time delay is used
Remove wire 1-2 if thermostat 2 is used

6.5 Electronic unit for variable speed compressors

The electronic unit provides the NLV compressors with a high starting torque (HST) which means that a pressure-equalization of the system before each start is not necessary.

The variable speed compressor motor is electronically controlled. The electronic unit has built-in overload protection as well as thermal protection. In case of activation of the protection the electronic unit will protect the compressor motor as well as itself. When the protection has been activated, the electronic unit automatically will restart the compressor after a certain time.

The compressors are equipped with permanent magnet rotors (PM motor) and 3 identical stator windings. The electronic unit is mounted directly on the compressor and controls the PM motor.

Connecting the motor directly to AC mains, by fault, will damage the magnets and lead to drastically reduced efficiency, or even no functioning.

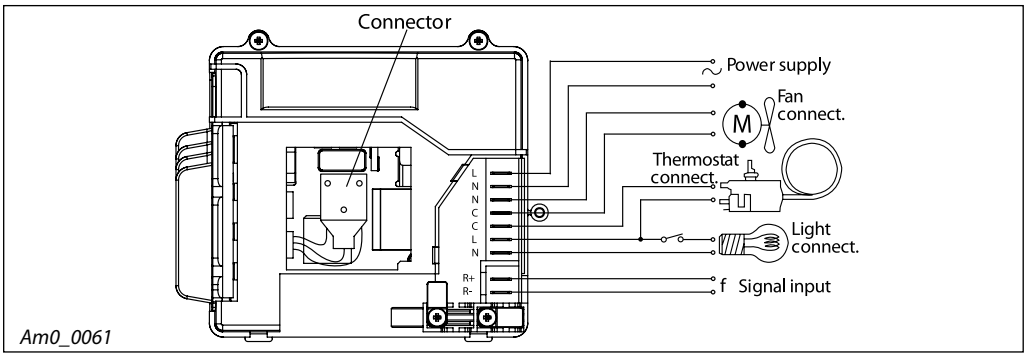

Am0_0061

7.0 Evacuation

After brazing, evacuation of the refrigeration system is started.
When a vacuum below 1 mbar is obtained the system is pressure equalized before the final evacuation and charging of refrigerant.
If a pressure test has been performed directly before evacuation, the evacuation process is to be started smoothly, with low pumping volume, to avoid oil loss from the compressor.
Many opinions exist how evacuation can be carried out in the best way.
Dependent on the volume conditions of the suction and the discharge side in the refrigeration system, it might be necessary to choose one of the following procedures for evacuation.
One-sided evacuation with continuous evacuation until a sufficiently low pressure in the condenser has been obtained. One or more short evacuation cycles with pressure equalization in between is necessary.
Two-sided evacuation with continuous evacuation until a sufficiently low pressure has been obtained.

These procedures naturally require a good uniform quality (dryness) of the components used.
The below drawing shows a typical course of a one-sided evacuation from the process tube of the compressor. It also shows a pressure difference measured in the condenser. This can be remedied by increasing the numbers of pressure equalizations.
The dotted line shows a procedure where two sides are evacuated simultaneously.
When the time is limited, the final vacuum to be obtained is only dependent on the capacity of the vacuum pump and the content of non condensable elements or refrigerant residues in the oil charge.
The advantage of a two-sided evacuation is that it is possible to obtain a considerably lower pressure in the system within a reasonable process time.
This implies that it will be possible to build a leak check into the process in order to sort out leaks before charging the refrigerant.

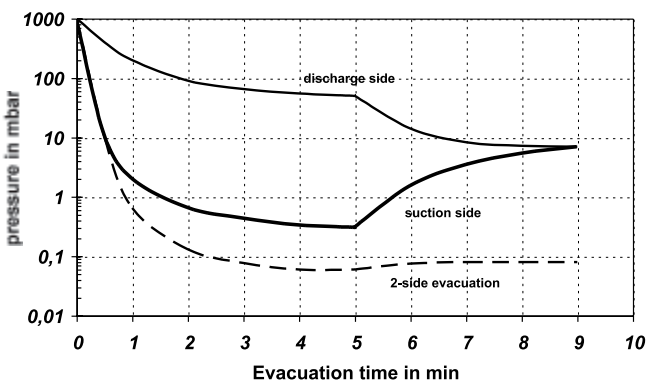

Am0_0062

7.0 Evacuation *(continued)*

The below drawing is an example of a pre-evacuation process with built-in leak test.

The level of vacuum obtained depends on the process chosen. Two-sided evacuation is recommended.

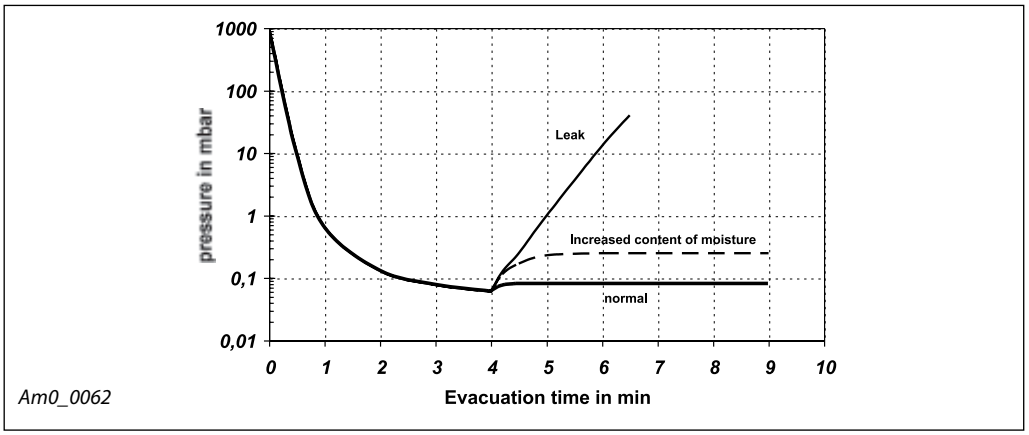

7.1 Vacuum pumps

An explosion-safe vacuum pump must be used for systems with the flammable refrigerants R600a and R290.

The same vacuum pump can be used for all refrigerants if it is charged with Ester oil.

8.0 Charging of refrigerant

Always charge the system with type and amount of refrigerant recommended by the manufacturer. In most cases the refrigerant charge is indicated on the type label of the appliance.

Charging can be done according to volume or by weight. Use a charging glass for charging by volume. Flammable refrigerants must be charged by weight.

8.1 Maximum refrigerant charge

If the max refrigerant charge is exceeded the oil in the compressor may foam after a cold start and the valve system could be demaged.

The refrigerant charge must never be too large to be contained on the condenser side of the refrigeration system. Only the refrigerant amount necessary for the system to function must be charged.

Compressor	Maximum refrigerant charge			
	R134a	R600a	R290	R404A
P	300 g	150 g		
T	400 g*	150 g	150 g	400 g
N	400 g*	150 g	150 g	400 g
F	900 g	150 g		850 g
SC	1300 g		150 g	1300 g
GS	2000 g			2000 g
SC-Twin	2200 g			2200 g

**) Single types with higher limits available, see data sheets.*

8.2 Closing the process tube

For the refrigerants R600a and R290 the closing of the process tube can be done by means of a LOKRING connection.

Soldering is not allowed on systems with flammable refrigerants.

9.0 Testing

Before leaving a system it must be checked that cooling down of the evaporator is possible and that the compressor operates satisfactory on the thermostat.

For systems with capillary tube as throttling device it is important to check that the system is able to pressure equalize during standstill periods and that the low starting torque compressor is able to start the system without causing trips on the motor protector.

9.1 Testing of the appliance

Hermetic refrigerating systems must be tight. If a domestic appliance shall function over a reasonable lifetime, it is necessary to have leak rates below 1 gram per year. So leak test equipment of a high quality is required.

All connections must be tested for leaks with a leak testing equipment. This can be done with an electronic leak testing equipment.

The discharge side of the system (from discharge connector to the condenser and to the drier) must be tested with the compressor running. The evaporator, the suction line and the compressor must be tested during standstill and equalized pressure.

If refrigerant R600a is used, leak test should be done with other means than the refrigerant, e.g. helium, as the equalizing pressure is low, so often below ambient air pressure. Thus leaks would not be detectable.

Contents

Page

1.0 General 23
1.1 Fault location 23
1.2 Replacement of thermostat 24
1.3 Replacement of electrical equipment 25
1.4 Replacement of compressor 25
1.5 Replacement of refrigerant 25
2.0 Rules for repair work 27
2.1 Opening of the system 27
2.2 Brazing under an inert protective gas 28
2.3 Filter drier 28
2.4 Moisture penetration during repair 29
2.5 Preparation of compressor and electrical equipment 29
2.6 Soldering 30
2.7 Evacuation 31
2.8 Vacuum pump and vacuum gauge 31
3.0 Handling of refrigerants 32
3.1 Charging with refrigerant 32
3.2 Maximum refrigerant charge 32
3.3 Test 33
3.4 Leak test 33
4.0 Replacement of defective compressor 34
4.1 Preparation of components 34
4.2 Removal of charge 34
4.3 Removal of defective compressor 34
4.4 Removal of refrigerant residues 34
4.5 Removal of filter drier 34
4.6 Cleaning of solder joints and reassembly 34
5.0 Systems contaminated with moisture 35
5.1 Low degree of contamination 35
5.2 High degree of contamination 35
5.3 Drying of compressor 36
5.4 Oil charge 36
6.0 Lost refrigerant charge 37
7.0 Burnt compressor motor 38
7.1 Oil acidity 38
7.2 Burnt system 38

Notes

1.0 General

Repairs of refrigerators and freezers demand skilled technicians who are to perform this service on a variety of different refrigerator types. Previously service and repair were not as heavily regulated as now due to the new refrigerants, some of which are flammable.

Fig. 1: Hermetic refrigeration system with capillary tubes

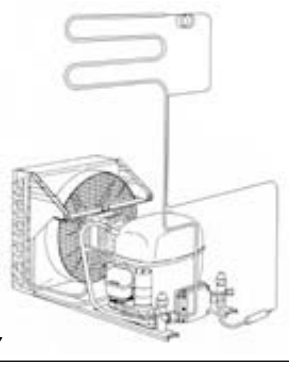

Am0_0107

Fig. 1 shows a hermetic refrigeration system with capillary tube as expansion device. This system type is used in most household refrigerators and in small commercial refrigerators, ice cream freezers and bottle coolers.
Fig. 2. shows a refrigeration system using a thermostatic expansion valve. This system type is mainly used in commercial refrigeration systems.

Fig. 2: Hermetic refrigeration system with expansion valve

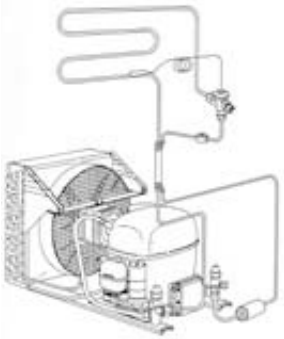

Am0_0108

Repair and service is more difficult than new assembly, since working conditions "in the field" are normally worse than in a production site or in a workshop.
A precondition for satisfactory service work is that the technicians have the right qualifications, i.e. good workmanship, thorough knowledge of the product, precision and intuition.
The purpose of this guide is to increase the knowledge of repair work by going through the basic rules. The subject matter is primarily dealt with reference to repair of refrigeration systems for household refrigerators "in the field" but many of the procedures may also be transferred to commercial hermetic refrigeration installations.

1.1 Fault location

Before performing any operations on a refrigeration system the progress of the repair should be planned, i.e. all necessary replacement components and all resources must be available. To be able to make this planning the fault in the system must first be known. For fault location tools must be available as shown in fig. 3. Suction and discharge manometer, service valves, multimeter (voltage, current and resistance) and a leak tester.

In many cases it can be concluded from the user's statements which faults could be possible, and for most faults a relatively accurate diagnosis can be made. However, a precondition is that the service technician has the necessary knowledge of the functioning of the product and that the right resources are available. An elaborate fault location procedure will not be gone through here, however, the most common faults where the compressor does not start or run are mentioned in the following.

Fig. 3: Pressure gauges, service valve, multimeter and leak tester

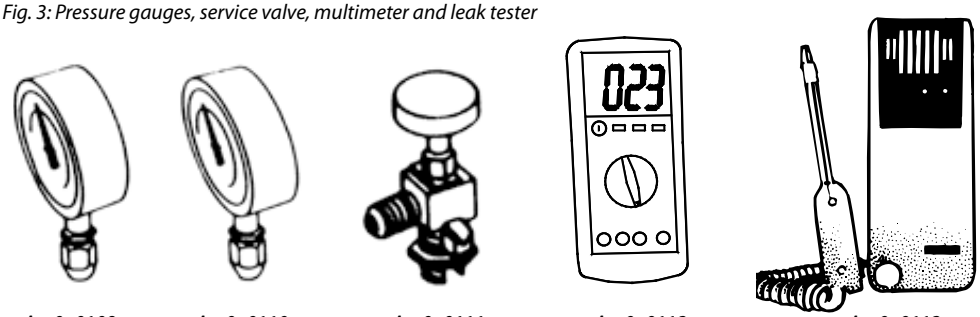

Am0_0109 *Am0_0110* *Am0_0111* *Am0_0112* *Am0_0113*

Main switch released
One potential fault may be a defective fuse, and the reason may be a fault in the motor windings or in the motor protector, a short circuit or a burnt current lead-in on the compressor. These faults require the compressor to be replaced.

Compressor
Starting device and compressor motor may be a wrong choice. Compressor motor or winding protector may be defective, and the compressor may be mechanically blocked.

Frequent reasons for reduced refrigeration capacity are coking or copper platings due to moisture or non-condensable gases in the system.

Blown gaskets or broken valve plates are due to too high peak pressures and short-time pressure peaks as a result of liquid hammering in the compressor, which may be due to a too high refrigerant charge in the system or a blocked capillary tube.

1.1 Fault location *(continued)*

The voltage may be too low or the pressure too high for the compressor. Non equalized pressure causes the motor protector to cut out after each start and will eventually result in a burnt motor winding. A defective fan will also affect the compressor load and may cause motor protector cut outs or blown gaskets.

In case of unsuccessful start and cold compressor up to 15 minutes may pass until the winding protector cuts the compressor out. If the winding protector cuts out when the compressor is hot up to 45 minutes may pass until the protector cuts the compressor in again.
Before starting a systematic fault location it is a good rule to cut off the voltage to the compressor for 5 minutes. This ensures the PTC starting device, if any, to be cooled sufficiently to be able to start the compressor.

Should a brief power failure occur within the first minutes of a refrigeration process, a conflict situation (interlocking) may arise between the protector and the PTC. A compressor with a PTC starting device cannot start in a system that is not pressure-equalized, and the PTC cannot cool so quickly. In some cases it will take up to 1 hour until the refrigerator runs normally again.

High and low pressure switches
Cut out of the high pressure switch may be due to too high condensing pressure, probably caused by lack of fan cooling. A cut-out low pressure switch may be due to insufficient refrigerant charge, leakage, evaporator frost formation or partial blockage of the expansion device.

The cut out may also be due to a mechanical failure, wrong difference setting, wrong cut-out pressure setting or irregularities in pressure.

Thermostat
A defective or incorrectly set thermostat may have cut out the compressor. If the thermostat loses sensor charge or if the temperature setting is too high, the compressor will not start. The fault may also be caused by a wrong electrical connection.
Too low a differential (difference between cut in and cut out temperature) will cause too short compressor standstill periods, and in connection with a LST compressor (low starting torque) this might lead to starting problems.
See also point 1.2 " Replacement of thermostat".

For further details please refer to "Fault location and prevention in refrigeration circuits with hermetic compressors".

A careful fault determination is necessary before opening the system, and especially before removing the compressor from the system. Repairs requiring operations in a refrigeration system are rather costly. Before opening old refrigeration systems it may therefore be appropriate to make sure that the compressor is not close to breaking down though it is still functional.
An estimation can be made by checking the compressor oil charge. A little oil is drained in to a clean test glass and is compared with a new oil sample. If the drained oil is dark, opaque and containing impurities, the compressor should be replaced.

1.2 Replacement of thermostat

Before replacing the compressor it is a good idea to check the thermostat.

A simple test can be made by short-circuiting the thermostat so the compressor gets power directly. If the compressor can operate like this the thermostat must be replaced.

For replacement it is essential to find a suitable type, which may be difficult with so many thermostat types in the market. To make this choice as easy as possible several manufacturers, i.e. Danfoss, have designed so-called "service thermostats" supplied in packages with all accessories necessary for thermostat service.

Fig. 4: Service thermostats

Am0_0114

With eight packages, each covering one type of refrigerator and application, service can be made on almost all common refrigerators. See fig. 4.
The application area of each thermostat covers a wide range of thermostat types. Moreover, the thermostats have a temperature differential between cut in and cut out sufficient to ensure satisfactory pressure equalization in the system standstill periods.

In order to achieve the requested function the thermostat sensor (the last 100 mm of the capillary tube) must always be in close contact with the evaporator.

When replacing a thermostat it is important to check whether the compressor operates satisfactorily both in warm and cold position, and whether the standstill period is sufficient for the system pressure equalization when using a LST compressor.

With most thermostats it is possible to obtain a higher temperature differential by adjusting the differential screw. Before doing this it is recommended to seek advice in the thermostat data sheet which way the screw must be turned. Another way of obtaining a higher differential is to place a piece of plastic between the sensor and the evaporator, since 1 mm plastic results in approx. 1°C higher differential.

1.3 Replacement of electrical equipment

The cause for faults may also be found in the electrical equipment of the compressor, where it is possible to replace starting relay/PTC starting device, motor protector, starting or run capacitor. A damaged starting capacitor may be caused by too low thermostat differential setting, since the starting capacitor must maximum cut in 10 times/hour.

If a fault is found on the winding protector built into many hermetic compressors the entire compressor must be replaced.

When replacing a compressor the electrical equipment must be replaced as well, since old electrical equipment used with a new compressor may cause a compressor breakdown later.

1.4 Replacement of compressor

If the failure is a defective compressor, the technician must take care to select a compressor with the correct characteristics for the appliance. If a compressor corresponding to the defective one is available, and if it is intended for a non regulated refrigerant, no further problems will arise. However, in many cases it is impossible to provide the same compressor type as the defective one, and in this case the service technician must be aware of some factors.
If it is a question of changing from one compressor manufactured to another it can be difficult to select the correct compressor, and therefore different parameters have to be considered.
Compressor voltage and frequency must correspond to voltage and frequency on location.
Then the application area must be considered (low, medium or high evaporating temperatures).
The cooling capacity must correspond to the one of the previous compressor, but if the capacity is unknown a comparison of the compressor displacements will be applicable. It would be appropriate to select a compressor slightly larger than the defective one.
For a capillary tube system with pressure equalization during the standstill periods a LST compressor (low starting torque) can be used, and for a system with expansion valve or no pressure equalization a HST compressor (high starting torque) is to be chosen.
Of course a HST compressor may also be used in a capillary tube system.
Finally the compressor cooling conditions must also be considered. If the system has an oil cooling arrangement, a compressor with an oil cooler must be selected.
In a service situation a compressor with an oil cooler instead of a compressor without oil cooler can be used without problems, since the spiral can be completely ignored when it is not required.

1.5 Replacement of refrigerant

The best solution for a repair is to select the same refrigerant as used in the present system.
Danfoss compressors are supplied or were supplied in versions for the refrigerants R12, R22, R502, R134a, R404A/R507/R407C and for the flammable refrigerants R290 and R600a.
The refrigerants R12 and R502, which are covered by the regulations in the Montreal Protocol, may be used in very few countries only, and the refrigerants will eventually be phased out of production altogether.
For heat pump systems the refrigerant R407C is now used instead of R22 and R502.
The more environmentally acceptable refrigerant R134a has replaced R12, and the refrigerants R404A and R507 have replaced R22 and R502 in many applications.

The flammable refrigerants R290 and R600a
Maximum charge of these refrigerants in a system is 150 g according to today's relevant appliance standards, and they must be applied in small refrigerators only.

The flamable refrigerants must only be used in refrigeration systems meeting the requirements of EN/IEC 60335-2-24 or -2-89, including demands for flammable refrigerants. and the service personnel must be specially trained for the handling. This implies knowledge of tools, transport of compressors and refrigerant as well as all relevant rules and safety regulations.
If open fire or electrical tools are used near the refrigerants R600a and R290, this must take place in conformity with current regulations.
The refrigeration systems must always be opened with a tube cutter.

Change from the refrigerants R12 or R134a to R600a is not permitted, since the refrigerators are not approved for use with flammable refrigerants, and the electrical safety has not been tested according to current standards. The same applies to change from the refrigerants R22, R502 or R134a to R290.

Blend refrigerants

Refrigerant	Trade name	Composition	Replacing	Application area	Applicable oils
R401A	Suva MP39	R22, R152a, R124	R12	L - M	Alkylbenzene
R401B	Suva MP66	R22, R152a, R124	R12	L	Alkylbenzene
R402A	Suva HP80	R22, R125, R290	R502	L	Polyolester Alkylbenzene
R402B	Suva HP81	R22, R125, R290	R502	L - M	Polyolester Alkylbenzene

1.5 Replacement of refrigerant *(continued)*

Refrigerant blends
At the same time as the new environmentally acceptable refrigerants (R134a and R404A) were introduced, some refrigerant blends for service purposes were also introduced. They were better environmentally acceptable than the previously used CFC refrigerants (R12 and R502).
In many countries the refrigerant blends were only permitted for a short period, which meant that they were not widely spread in connection with small hermetic refrigeration systems.
Use of these refrigerants cannot be recommended for series production but they can be used for repair in many cases, see the table on the previous page.

Add in
This designation is used when filling up an existing refrigeration system with another refrigerant than the one originally charged.
This is especially the case when problems arise which must be solved with as small an operation as possible.
Correspondingly, R22 systems were replenished with a small amount of R12 in order to improve the flow of oil back to the compressor.
In several countries it is not allowed to add in on CFC systems (R12, R502, …...)

Drop in
This term means that during service on an existing refrigeration system i.e. > 90% of the original mineral oil is poured out and replaced by synthetic oil, and a new suitable filter drier is mounted. Furthermore, the system is charged with another compatible refrigerant (i.e. blend).

Retrofit
The term retrofit is used about service on refrigeration systems replacing the CFC refrigerant by an environmentally acceptable HFC refrigerant.
The refrigeration system is flushed, and the compressor is replaced by an HFC compressor. Alternatively the compressor oil is replaced by a suitable Ester oil.
The oil must be changed several times after short operating periods, and the filter drier must be replaced.

In case of oilreplacement a statement from the compressor manufactorer on material compatibility is necessary.

2.0 Rules for repair work

To enable a hermetic refrigeration system to work as intended and to achieve a reasonable service life the content of impurities, moisture and non condensable gases must be kept on a low level. When assembling a new system these requirements are relatively easy to meet, but when repairing a defective refrigeration system the matter is more complicated. Among other things, this is due to the fact that faults in a refrigeration system often start disadvantageous chemical processes, and that opening a refrigeration system creates possibilities for contamination.
If a repair is to be carried out with a good result a series of preventive measures is necessary. Before stating any details about the repair work, some general rules and conditions have to be explained.

2.1 Opening of the system

Fig. 5: Hermetic refrigeration system with capillary tube

Am0_0115

If the refrigeration system contains a flammable refrigerant like e.g. R600a or R290, this will appear from the type label. A Danfoss compressor will be provided with a label as shown in fig. 6.

Fig. 6: Label on compressor for R600a

Am0_0117

Service and repair of such systems demand specially trained personnel. This implies knowledge of tools, transport of compressor and refrigerants as well as the relevant guidelines and safety rules.
When working with the refrigerants R600a and R290 open fire may only occur as described in existing guidelines.
Fig. 7 shows a piercing valve for mounting on the process tube, thus enabling an opening into the system for draining off and collecting the refrigerant as per instructions.

Fig. 7: Piercing valve

Am0_0111

Fig. 8 Recovery unit for refrigerants

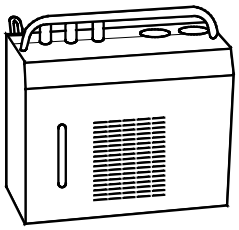

Am0_0116

Before starting to cut tubes in the refrigeration system it is recommended to clean the tubes with emery cloth in the places to be cut. Thus the tubes are prepared for the subsequent soldering, and entry of dirt grains into the system is avoided.

Only use tube cutter, never metal-cutting saw, for cutting tubing in a refrigeration system.
Merely a small burr left in the system can cause a subsequent compressor breakdown.
All refrigerants must be collected as per instructions.

When a capillary tube is cut it is essential not to admit burrs or deformations to the tube. The capillary tube can be cut with special pliers (see fig. 9), or with a file a trace can be produced in the tube which can then be broken.

Fig. 9: Special pliers for capillary tubes

Am0_0118

2.2 Brazing under an inert protective gas

A system charged with refrigerant must never be heated or soldered, especially not when the refrigerant is flammable.
Soldering on a system containing refrigerant will cause formation of refrigerant decomposition products.
Once the refrigerant is drained off an inert protective gas must be filled into the system. This is done by a thorough blow-through with dry nitrogen. Before the blow-through the system must be opened in one more place.

If the compressor is defective it would be appropriate to cut the suction and pressure tube outside the compressor connectors, not opening the process tube.
If, however, the compressor is functional, it is recommended to cut the process tube.
Blow-through must be done first through evaporator and then through condenser.
An inlet pressure of approx. 5 bar and a blow-through of approx. 1-2 minutes would be atisfactory on appliances.

2.3 Filter drier

The filter drier is adsorbing the small water amounts released through the life of the system. Besides, it acts as a trap strainer and prevents blocking of the capillary tube inlet and problems with dirt in the expansion valve.

If a refrigeration system has been opened the filter drier must always be replaced to ensure sufficient dryness in the repaired system.

Replacement of a filter drier must always be done without use of a torch. When heating the filter drier there is a risk of transferring the adsorbed moisture amount to the system, and the possibility of a flammable refrigerant being present must also be considered.
In case of a non-flammable refrigerant, however, a blowpipe flame may be used but the capillary tube must be broken and then dry nitrogen must be blown through the filter towards the open air while the filter drier is detached.
Normally a filter drier can adsorb a water amount of approx. 10% of the desiccant weight. In most systems the capacity is not utilized, but in cases of doubt about the filter size it is better to use an oversized filter than one with too small a capacity.
The new filter drier must be dry. Normally this is no problem but it must always be ensured that the filter drier sealing is intact to prevent moisture collection during storage and transport.
The filter drier must be mounted in a way that flow direction and gravitation have an effect in the same direction.

Thus it is prevented that the Molecular Sieve (MS) balls wear each other and produce dust, which may block the capillary tube inlet. This vertical position also ensures a quicker pressure equalization in capillary tube systems. See fig. 10.

Fig. 10: Correct location of filter drier

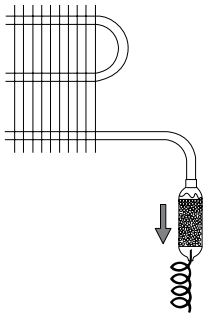

Am0_0119

Since water has a molecule size of 2.8 Ångstrøm, molecular sieve filters with a pore size of 3 Ångstrøm are suitable for the normally used refrigerants, since the water molecules are adsorbed in the pores of the desiccant, whereas the refrigerant can freely pass through the filter.

Compressor	Filter drier
P and T	6 gram or more
F and N	10 gram or more
SC	15 gram or more
GS	22 gram or more

Filter driers with a pore size of 3 Ångstrøm in relation to refrigerant:
In connection with service on commercial refrigeration systems Danfoss DML filters are recommended.

If a filter with aluminium oxide is required for the suction line, Danfoss type DAS burnout filters for the refrigerants R134a and R404A are recommended.

2.4 Moisture penetration during repair

A repair must always be done quickly, and no refrigeration system must be open to the atmosphere for more than 15 minutes to avoid moisture intake. Therefore it is a good rule to have all replacement components made ready before the system is opened.

If it is impossible to complete the repair continuously, the open system must be carefully sealed off and charged with a slight overpressure of dry nitrogen to avoid moisture penetration.

2.5 Preparation of compressor and electrical equipment

Rubber grommets are to be mounted in the compressor base plate while the compressor is standing on its base plate. If the compressor is placed upside down oil will gather in the connectors, which leads to soldering problems. Never use rubber grommets from a defective compressor since they are often aged and harder than new rubber grommets.
Remove the cap (Capsolute) from the process connector of the new compressor and solder a process tube into the connector. Leave the compressor closed until it is to be soldered into the system.
Besides, it is recommended to plug all connectors on compressor, filter drier and system if for some reason the repair is delayed.

The aluminium caps on the connectors must not be left in the finished system.

The caps are only intended to protect the compressor during storage and transport and do not provide tightness in a system under pressure. The caps make sure that the compressor has not been opened after it left Danfoss. If the caps are missing or are damaged, the compressor should not be used until it has been dried and the oil has been replaced.

Never reuse old electrical equipment.

It is recommended always to use new electrical equipment with a new compressor, since use of old electrical equipment with a new compressor may lead to the compressor soon developing defects.
The compressor must not be started without a complete starting device.
Since part of the starting circuit resistance lies in the starting device, start without complete starting device does not provide good starting torque and may result in a very quick heating of the compressor start winding, causing it to be damaged.

The compressor must not be started in vacuum.

Start of compressor in vacuum may cause a breakdown inside between the pins of the current lead-in, since the insulation property of the air is reduced at falling pressure.

Fig. 11 shows a wiring diagram with PTC starting device and winding protector. A run capacitor connected to the terminals N and S will reduce energy consumption on compressors designed for this.

Fig. 11: Wiring diagram with PTC and winding protector

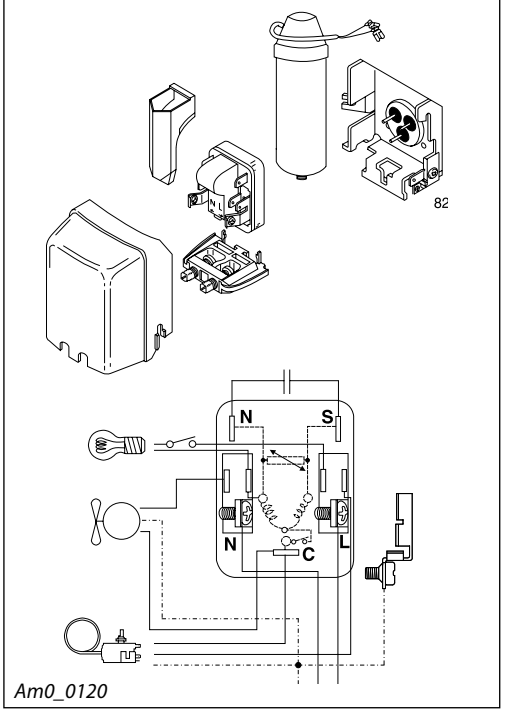

Fig. 12 shows a wiring diagram with starting relay and starting capacitor as well as a motor protector mounted outside the compressor.

Fig. 12: Wiring diagram with starting relay and starting capacitor

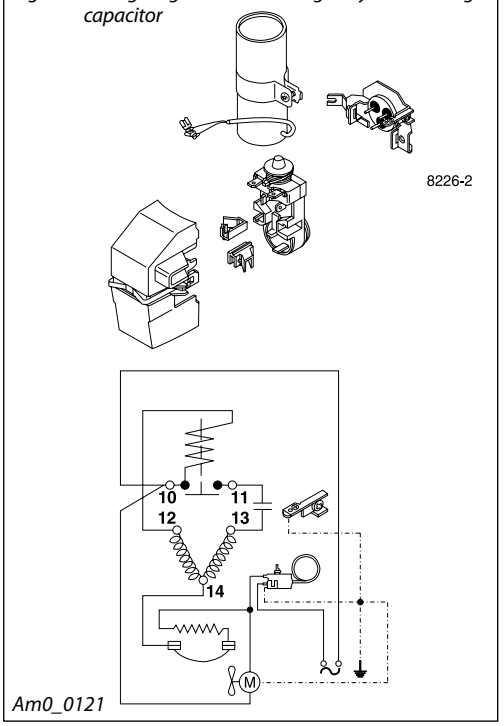

2.5
Preparation of compressor and electrical equipment
(continued)

Fig. 13 shows a wiring diagram for large SC compressors with CSR motor.

Fig. 13: Wiring diagram for CSR motor

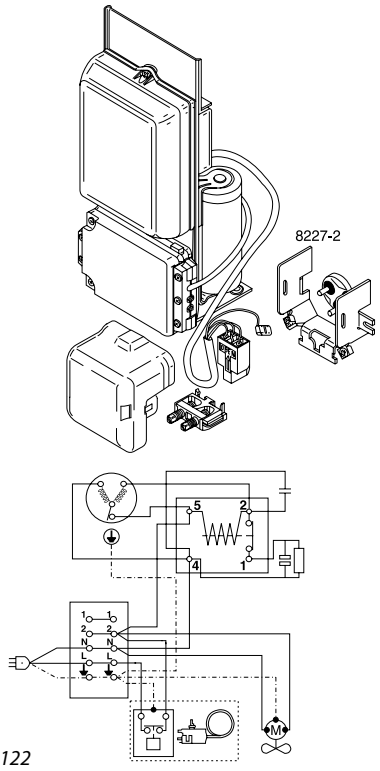

2.6
Soldering

Creation of the correct soldering fit is important.

Recommended soldering gaps for brazing joints

	Material	Material
Solder alloy	Copper tubes	Steel tubes
Easy-flo	0.05 - 0.15 mm	0.04 - 0.15 mm
Argo-flo	0.05 - 0.25 mm	0.04 - 0.2 mm
Sil-fos	0.04 - 0.2 mm	Not suitable

The connectors of most Danfoss compressors are copperplated steel tubes welded into the compressor housing, and the welded connections cannot be damaged by overheating during soldering.

Please see the section "Mounting instructions" for further details about soldering.

2.7 Evacuation

When a refrigeration system is assembled it must be carefully evacuated (remove air from the system), before it is charged with refrigerant. This is necessary to achieve a good repair result.
The main purpose of the evacuation is to reduce the amount of non-condensable gasses (NCG) in the system, and secondarily a limited drying will take place.
Moisture in the system may cause ice blocking, reaction with the refrigerant, ageing of the oil, acceleration of oxidation processes and hydrolysis with insulation materials.
Evacuation of refrigerating system.
Non-condensable gasses (NCG) in a refrigeration system may mean increased condensing pressure and thus greater risk of coking processes and a higher energy consumption.
The content of NCG must be kept below 1 vol. %.
The evacuation may be done in different ways depending on the volume conditions on the suction and discharge side of the system.

If evaporator and compressor have a large volume one-sided evacuation may be used, otherwise double-sided evacuation is recommended.
One-sided evacuation is made through the compressor process tube but this method means slightly worse vacuum and slightly higher content of NCG. From the discharge side of the refrigeration system the air must be removed through the capillary tube, which results in a substantial restriction. The result will be a higher pressure on the discharge side than on the suction side.
The main factor for the NCG content after evacuation is the equalized pressure in the system, which is determined by the distribution of volumes.
Typically, the volume on the discharge side will constitute 10-20% of the total volume, and therefore the high end pressure has less influence on the equalized pressure here than the large volume and low pressure on the suction side.
-

Fig. 14: Evacuation process

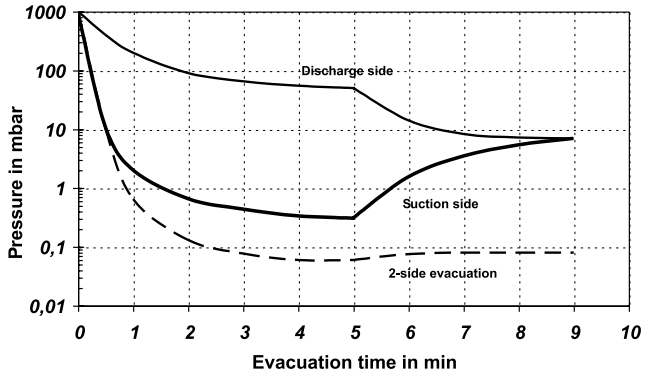

Am0_0133

2.8 Vacuum pump and vacuum gauge

In order to perform a sufficient evacuation a good vacuum pump must be available. See fig. 15.

Fig. 15: Vacuum pump

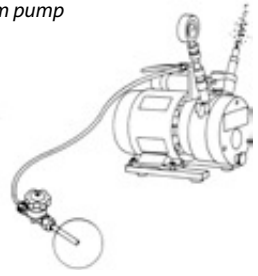

Am0_0135

For stationary use a two-stage 20 m^3/h vacuum pump can be recommended but for service a smaller two-stage 10 m^3/h vacuum pump is better suited due to its lower weight.
A hermetic refrigeration compressor is not suitable for the purpose since it is not able to produce a sufficiently low pressure, and also a compressor used as a vacuum pump would be overheated and damaged.
The insulation resistance of the air is reduced at falling pressure, and therefore there electrical breakdown at the current lead-in or in the motor of the hermetic compressor will quickly occur.

The same vacuum pump may be used for all types of refrigerants provided that it is charged with Ester oil.
A flameproof vacuum pump must be used for refrigeration systems containing the flammable refrigerants R600a and R290.

There is no point in having a suitable vacuum pump available if the vacuum obtained cannot be measured. Therefore it is strongly recommended to use an appropriate robust vacuum gauge (fig. 16) able to measure pressure below 1 mbar.

Fig. 16: Vacuum gauge

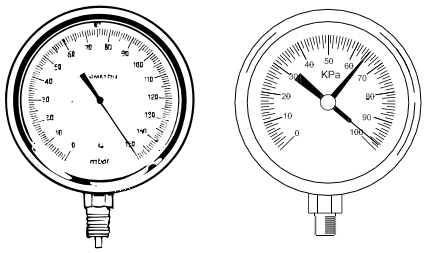

Am0_0136 Am0_0137

3.0 Handling of refrigerants

To ensure a reasonable refrigeration system life the refrigerant must have a maximum moisture content of max 20 ppm (20 mg/kg).
Do not fill refrigerant from a large container into a filling bottle through several container sizes, since with every drawing-off the water content in the refrigerant is increased considerably.

Flammable refrigerants R290 and R600a
R600a must be stored and transported in approved containers only and must be handled according to existing guidelines.

Do not use open fire near the refrigerants R600a and R290.
The refrigeration systems must be opened with a tube cutter.

Conversion from refrigerant R134a to R600a is not permitted, since the refrigerators are not approved for operation with flammable refrigerants, and the electrical safety has not been tested according to existing standards either. The same applies to conversion from refrigerant R134a to R290.

3.1 Charging with refrigerant

Normally, charging with refrigerant is no problem with a suitable charging and provided that the equipment present charging amount of the refrigeration system is known. See fig. 17.

Fig. 17: Charging board for refrigerant

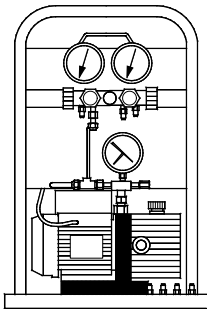

Am0_0138

Always charge the refrigerant amount and type stated by the refrigerator manufacturer.
In most cases this information is stated on the refrigerator type label. The different compressor brands contain different amounts of oil, so when converting to another brand it may be advisable to correct the amount of refrigerant.

Charge of refrigerant can be made by weight or by volume. Flammable refrigerants like R600a and R290 must always be charged by weight. Charging by volume must be made with a refrigerant charging cylinder.

The refrigerant R404A and all other refrigerants in the 400 series must always be charged as liquid.
If the charging amount is unknown, charging must be done gradually until the temperature distribution above the evaporator is correct.
The refrigerant charge must be made with running compressor, refrigerator without load and with the door closed.
The correct charge is characterized by the temperature from inlet plus superheat equals outlet of the evaporator.

Systems with expansion valve must be charged with refrigerant until there are no bubbles in the sight glass, which should be placed as close to the expansion valve as possible.

3.2 Maximum refrigerant charge

If the permissible limit of refrigerant charge stated in the compressor data sheet is exceeded the oil will foam in the compressor after a cold start and may result in a damaged valve system in the compressor.
The refrigerant charge must never exceed the amount that can be contained in the condenser side of the system.

Please also refer to the compressor data sheets, as the present maximum refrigerant charge may deviate on single types from the statements in the form.
The maximum charge of 150 g for R600a and R290 is an upper safety limit of the appliance standards, whereas the other weights are stated to avoid liquid hammer.

Compressor Type	Max. refrigerant charge			
	R134a	R600a	R290	R404A
P	300 g	120 g		
T	400 g	150 g	150 g	600 g
TL….G	600 g	150 g	150 g	
N	400 g	150 g	150 g	
F	900 g	150 g		850 g
SC	1300 g		150 g	1300 g
GS	2200 g			2200 g
SC-Twin	2200 g			

3.3 Test

Before finishing a repair the complete refrigerator must be tested to make sure that the expected result has been achieved. It must be ensured that the evaporator can be cooled down and thus enable the requested temperatures to be obtained.
For systems with capillary tube as throttling device it is important to check if the compressor runs satisfactorily on the thermostat. Further it must be checked if the thermostat differential allows for sufficient standstill periods for pressure equalization so an LST compressor (low starting torque), if any, can start and operate without tripping on the motor protector.
In areas where undervoltage may occur it is important to test operating conditions at 85% of the nominal voltage, since both starting and stall torque of the motor will decline when the voltage is falling.

3.4 Leak test

A hermetic refrigeration system must be tight, and if a refrigerator is to have a reasonable lifetime it is necessary to keep any leaks below 1 gram refrigerant annually.
Since many refrigeration systems with the flammable refrigerants R600a and R290 have charging amounts below 50 g, in these cases the leaks should be below 0.5 g refrigerant annually. This requires a high-quality electronical test equipment that can measure these small leak rates.
It is relevant to test all soldered joints of the system, also in places where no repair has been made.
The joints on the discharge side of the system (from the compressor discharge connector until condenser and filter drier) must be examined during operation of the compressor, which results in the highest pressures.
Evaporator, suction tube and compressor must be examined while the compressor is not operating and the pressure in the system is equalized, since this results in the highest pressures here. See fig. 19.

If no electronic detector (fig. 19) is available the joints may be examined with soapy water or with spray, but of course small leaks cannot be found with these methods.

Fig. 19: Leak detector

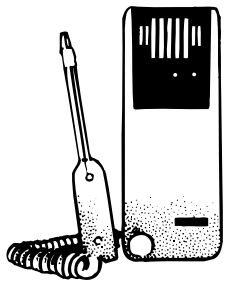

Am0_0113

4.0 Replacement of defective compressor

In the following a procedure for replacement of a defective compressor in a hermetic refrigeration system is outlined, following the fundamental rules.
A precondition is that there is a refrigerant overpressure in the system and that the system is not contaminated with moisture. The refrigerant must correspond to the original refrigerant.
During fault finding the compressor is found to be defective. If it turns out that the motor has burnt resulting in strong contamination of the system another procedure is required.

4.1 Preparation of components

By starting with preparation of the replacement components later delays with opened system are avoided, and thus also increased risk for admission of moisture and impurities.
A process tube with process valve must be mounted into the process connector of the new compressor.
In some case it may be an advantage to mount a piece of connecting tube into the compressor suction connector.
By doing so the later connection of the suction tube to the compressor can take place further away from the compressor if mounting conditions in the machine compartment are narrow.
When the compressor is ready process valve and connectors must be closed. Further, the correct filter drier type must be ready but the cover must remain intact.

4.2 Removal of charge

Place a piercing valve with connection to a recovery unit on the compressor process tube.
Puncture the tube and collect the refrigerant according to guidelines.
Follow the rules described earlier.

4.3 Removal of defective compressor

Cut the compressor suction and discharge tube with a tube cutter approx. 25-30 mm from the connectors in question, but previously the places to be cut must be trimmed with emery cloth preparing the soldering.
If the compressor is to be tested later, the tube ends must be closed with rubber plugs.
To facilitate any analysis or guarantee repair later the compressor must be provided with the cause for the fault and the refrigerator production date.
Compressors for R600a and R290 must always be evacuated and sealed before they are returned to refrigerator manufacturer or dealer.

4.4 Removal of refrigerant residues

To avoid decomposition of any refrigerant residues in the system during the subsequent soldering operations the system must be thoroughly blown through with dry nitrogen.
This is done by connecting the connection tube from the bottle with dry nitrogen first to the cut suction tube and afterwards to the cut discharge tube.

4.5 Removal of filter drier

The filter drier at the condenser outlet should be cut with a tube cutter but another method may also be used.
Produce a slight flow of dry nitrogen through the discharge tube to the condenser and maintain this flow while the filter is carefully removed with a torch. Avoid heating the filter enclosure itself.

4.6 Cleaning of solder joints and reassembly

Soldering silver must be removed from the condenser outlet. This is best done by brushing it off while the soldering silver is still liquid.
The other tube ends are to be prepared for soldering in case this was not yet done. Take care that dirt and metal grains are not admitted to the system when trimming soldered joints.
If necessary, blow through with dry nitrogen while trimming.
The new filter drier must be mounted at the condenser outlet, and the filter must be kept covered until assembly can take place. Avoid heating the filter enclosure itself with the flame.
Before soldering the capillary tube into the filter a slight stop must be produced on the tube as described earlier to ensure the tube end to be at the right place in the filter to avoid blockings.
Be careful during soldering of the capillary tube and avoid burnings.
Mount the compressor, which already during preparation must be provided with rubber grommets.
Mount the electrical equipment and connect the wires. Evacuation and charge are to be made as described in paragraphs 2.7 and 3.1.
Test to be made as described in paragraphs 3.3 and 3.4.
When the process tube is squeezed and soldered the process valve must be removed.

5.0 Systems contaminated with moisture

For systems contaminated with moisture it applies that the degree of contamination may be very varying, and the scope of the repair will vary accordingly.
Systems containing moisture can be divided into two categories, namely the ones with a low degree of contamination and the ones with a high degree of contamination.

Systems with a low degree of contamination are intact and maintain a refrigerant overpressure. Systems with a high degree of contamination, however, are characterized by having been in contact with the atmosphere or moisture has been added directly. The two types of defect will be treated independently.

5.1 Low degree of contamination

This defect is usually characterized by the cooling often being interrupted due to ice blocking in the capillary tube or in the expansion valve. With heat supply the ice blocking is gradually removed, but if the refrigerant circulates the blocking will quickly build up again.
This defect may be due to following reasons.
The system has not been assembled carefully enough.
The components used may have been moist.
A refrigerant with too high a moisture content may have been used.
The system will often be new or it has just been repaired. Usually the moisture amounts are small, and therefore the defect can normally be remedied by replacement of refrigerant and filter drier. The procedure is as follows.

a) Open the system at the process tube and collect the refrigerant.
It is an advantage to first let the compressor run until it is hot. In this way the moisture and refrigerant amount left in the motor or in the oil is reduced.
When ice is blocking capillary tube or expansion valve it is possible to run the compressor hot but the system will not run.
If capillary tube or expansion valve are accessible, the place of blocking may be kept hot with a heating lamp or a cloth with hot water to obtain circulation of the refrigerant.
The evaporating temperature in the system may also be increased by heating the evaporator. Do not use an open flame for heating.

b) After collecting the refrigerant the system must be blown through with dry nitrogen. Nitrogen injection must take place through the compressor process tube, and first the suction side and then the discharge side must be blown through, first directing the nitrogen flow from the compressor through the suction tube and evaporator and out through the capillary tube, then through compressor and condenser and out through the filter drier at the condenser outlet.
It is an advantage to blow through with so much pressure that any oil in the components is removed.

c) Replace filter drier and process tube as described earlier. It pays to use an oversized filter drier.

d) When the system is reassembled, evacuation must be carried out very carefully.
Charge and test according to earlier mentioned guidelines.

5.2 High degree of contamination

If there is a rupture in a refrigeration system and the refrigerant overpressure escapes, moisture contamination will take place. The longer time the system is open to the atmosphere the higher the degree of contamination. If the compressor is operating at the same time, conditions are further worsened. The admitted moisture amount will distribute in compressor, filter drier and other system components depending on their ability to hold the moisture.
In the compressor it will especially be the oil charge that absorbs the water. In evaporator, condenser and tubes the contamination will primarily be determined by the oil amounts present here.
Of course the largest water amounts will be in compressor and filter drier. There is also a high risk that valve coking has started damaging the compressor Therefore compressor and filter drier must be replaced during the normal repair procedure.

a) Remove the compressor from the system with a tube cutter.

b) Break the capillary tube at the condenser outlet, and blow through the condenser with dry nitrogen as protective gas.
Remove the filter drier.
Repeat the blow-through with increased pressure to remove oil from the condenser, if any. Cover condenser inlet and outlet.

c) Treat suction line heat exchanger and evaporator in the same way. The opportunity of an efficient blow-through is improved if the capillary tube is broken off at the evaporator inlet. Blow-through with nitrogen will then take place in two paces; first suction tube and evaporator, then capillary tubes.
If the reason for the repair is a broken capillary tube the operations must be changed to replace the entire heat exchanger.

d) Reassemble the system with a new compressor and a new filter drier in the right size.

5.2 High degree of contamination *(continued)*

Evacuation must be done with special care, and subsequently charge and test according to normal rules. The outlined procedure is best suited for simple refrigeration systems. If the system has difficult access and the design is complex the following procedure may be better suited.

e) Remove the compressor from the system and treat it according to point a.

f) Break the capillary tube at the condenser outlet.
Blow through with nitrogen through suction and discharge tube.

g) Mount a new oversized filter drier at the condenser outlet. Connect the capillary tube to the filter drier.

h) When the system, excl. compressor, is intact again carry out a drying.
This is made by at the same time connecting suction and discharge tube to a vacuum pump and evacuate to a pressure lower than 10 mbar.
Pressure equalize with dry nitrogen.
Repeat evacuation and pressure equalization.

i) Mount the new compressor.
Then evacuate, charge and test.

5.3 Drying of compressor

In some markets it may be necessary to repair a moist compressor in a workshop, and one is then obliged to manage somehow.
The drying process described here can give the wanted result, provided that the process is closely complied with.
Draw off the compressor oil charge.
Then flush the compressor inside with ½-1 litres of a non-flammable low pressure refrigerant or solvent.
Plug the compressor with the solvent inside and shake it thoroughly in all directions to get the refrigerant in touch with all inside surfaces.
Collect the solvent as stipulated.
Repeat the operation once or twice to ensure that no substantial oil residues are left in the compressor.
Blow through the compressor with dry nitrogen.
Connect the compressor to an arrangement as shown in fig. 20.

Plug the discharge connector.
The connections to the compressor suction connector must be vacuum tight. This can be achieved by soldered joints or by use of a suitable vacuum hose.

Bring the compressor up to a temperature between 115°C and 130°C before starting the evacuation. Then start the evacuation that must bring the pressure in the compressor down to 0.2 mbar or lower.
The joints in the vacuum system must be tight in order to achieve the required vacuum. The moisture content in the compressor will also influence the time for reaching the vacuum.
If the compressor is highly contaminated a few pressure equalizations with dry nitrogen to atmospheric pressure will enhance the process.
Shut off the connection to the vacuum instrument during the pressure equalization.
Temperature and vacuum must be maintained for approx. 4 hours.
On finishing the drying process the pressure in the compressor must be equalized to atmospheric pressure with dry nitrogen and the connectors must be sealed.
Charge the compressor with the specified oil type and amount and mount it into the refrigeration system.

Fig. 20: Drying of compressor

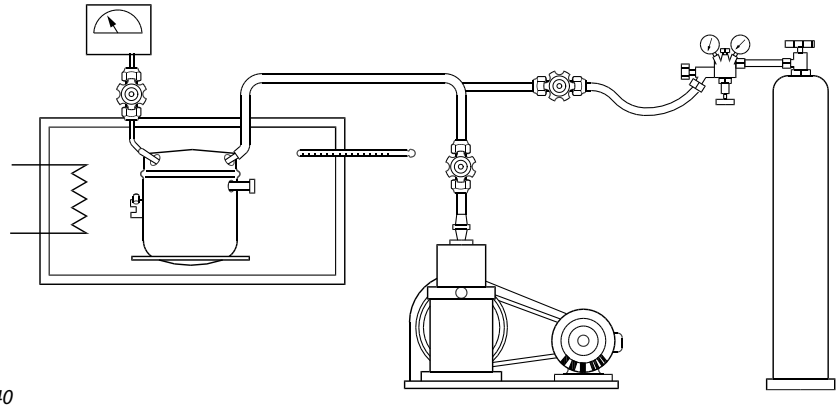

Am0_0140

5.4 Oil charge

In some cases it can be necessary to *replenish* a compressor with oil if it has lost some of the charge.
On some Danfoss compressors the amount of oil is stated on the type label, however, not on all, so the present oil type and amount must be found in the compressor datasheet.

It is absolutely essential to use the oil approved for the compressor in question. If a lost oil charge in a compressor must be replaced, it must generally be assumed that approx. 50 ccm of the oil charge will be left in the compressor when it is emptied completely by draining oil off from a connector.

6.0 Lost refrigerant charge

The term "lost charge" covers cases where the wanted cooling function is not achieved because there is not sufficient amount of refrigerant in the system.
The repair procedure implies a refrigerant overpressure in the system so that the contamination problems that may be caused by penetrating moisture can be disregarded.
"Lost charge" is characterized by the fact that the intended cooling is not achieved. The running time is long, and the compressor may run continuously. The build-up of rime on the evaporator is only partly and perhaps only around the injection place. The compressor will operate at low evaporating pressures, and this means low power and current consumption. The compressor will have a higher temperature than normal due to the reduced refrigerant transport.
The difference between "lost charge" and "blocked capillary tube" consists in the prevailing condenser pressure, however, after some time the pressure will be the same in both cases.
"Blocked capillary tube" results in the refrigerant being pumped into the condenser, and the pressure will become high. As the evaporator is pumped empty, however, the condenser will become cold.
If the blocking is complete no pressure equalization will take place during standstill.
With "lost charge", however, the pressure in the condenser will be lower than normal.
A considerable part of the repair procedure consists of finding the cause of the defect. If this is not done it will only be a question of time until the defect occurs again.
In case of blocking of the capillary tube in small systems they will normally be scrapped, but if large expensive systems are concerned a replacement of the suction line heat exchanger may be approproate.

The main steps in the repair procedure can be as follows (only for non-flammable refrigerants).

a) Mount a service valve on the compressor process tube.
Mount a pressure gauge and use this for fault determination.

b) Increase the refrigerant pressure in the system to 5 bar.

c) Examine all joints to see if there is any oil oozing out.
Perform a thorough search with leak test equipment until the leak is found.

d) Release the overpressure from the system.
Break the capillary tube at the condenser outlet.
Blow through the system with dry nitrogen.

e) Replace filter drier as described earlier.
Replace the process tube and repair the leak.

f) Evacuate the system and charge it with refrigerant.
Subsequently make a new leak test and test out the system.
After a pressure test of the system with high pressure perform a slowly starting evacuation with a large vacuum pump since otherwise the oil can be pumped out of the system.

7.0 Burnt compressor motor

A burnt motor has destroyed wire insulation. By burning is meant motors where the wire insulation is decomposed.

A real burning is characterized by the wire insulation in the motor having been exposed to critical temperatures for a long time.
If the temperature conditions in a compressor are changed in a way that the insulation material assumes a critical temperature for long time a burning will take place.
Such critical conditions may arise when the ventilation conditions are reduced (e.g. due to a defective fan), when the condenser is dirty or at abnormal voltage conditions.
The fault "lost charge" may have a corresponding effect. Part of the motor cooling is done by means of the circulating refrigerant. When the refrigeration system loses charge the evaporating pressure becomes abnormally low, less refrigerant is circulated per time unit, and the cooling is reduced.
In many cases a motor protector mounted in the electrical equipment cannot protect against such conditions. The motor protector is activated both by current and by temperature. If the current consumption is low, a high temperature is required around the protector to cause cut-out. However, at falling evaporating temperatures the temperature difference between motor and compressor housing will increase due to the poorer heat transmission.
Winding protectors placed directly in most motors provide a better protection in this situation, since they are primarily activated by the motor winding temperature.
If the wire insulation is decomposed very high temperatures will arise at the short-circuited wires. This may cause further decomposition of refrigerant and oil. As long as the compressor is functional, the entire process may cause circulation of breakdown products and thus contaminate the system.
When certain refrigerants are breaking up acid may be generated. If no cleaning is made in connection with a compressor replacement, the start of the next breakdown is already programmed.
Motor defects in hermetic compressors in household refrigerators are relatively rare. Normally, failures in the start winding are not causing contamination of the system but a short-circuit in the main winding may very well result in contamination.

7.1 Oil acidity

Since a burnt motor may result in contamination of the system with acid products, the acidity can be taken as a criterion whether the system requires a thorough cleaning.
The compressor itself and the discharge side of the system up to the filter drier will be the most contaminated part of the system. Once the refrigerant is removed from the system the compressor oil will show contamination or acidity.

A simple assessment can be made with an oil sample in a clean test glass. If the oil is dark, sludgy and perhaps contaminated with decomposed particles from the motor insulation, and if it also smells acidly there is something wrong.

7.2 Burnt system

Repair of a burnt system with products of decomposition is not recommended, and if a repair has to be performed anyway it is absolutely necessary to remove the products of decomposition from the system to avoid contamination and thus breakdown of the new compressor.
The following procedure can be used.

a) Remove the defective compressor.
   Blow through the tubes to remove old oil.

b) Mount a new compressor and a Danfoss DAS suction line burnout filter in the suction tube in front of the compressor to protect it against contamination products.
   Replace the filter drier in the liquid line with a DAS filter.

c) Evacuate and charge the system.
   Then let the system operate continuously for at least 6 hours.

d) Check the oil for acidity.
   If the oil is ok no further cleaning is required.
   Remove the filter in the suction line.
   Blow through the capillary tube thoroughly.
   Mount a new filter drier at the condenser outlet, e.g. Danfoss DML.
   Evacuate the system and charge it with refrigerant.

e) If the oil is acid under item d, replace the suction line filter and let the system operate for another 48 hours and then check the oil.
   If the oil is ok, follow item d.

Contents

Page

1.0 Refrigerant 41
1.1 Pressure 41
1.2 Capacity 42
1.3 Refrigerant charge 42
1.4 Purity 42
2.0 Materials 43
2.1 Driers 43
3.0 Flammability and safety 43
3.1 Appliance 44
3.2 Factory 45
4.0 Refrigeration system design 45
4.1 Heat exchangers 46
4.2 Capillary 46
4.3 Evacuation 46
4.4 Cleanliness of components 46
5.0 Service 47
References 47

Notes

Refrigerant R290, or propane, is a possible replacement for other refrigerants, which have high impact on environment, in small hermetic systems, like factory made commercial refrigerators and freezers. It has zero ozone depletion potential ODP and a neglectible global warming potential GWP. Furthermore it is a substance which is a part of petrol gases from natural sources.

The refrigerant R290 has been in use in refrigeration plants in the past, and is still used in some industrial plants. In domestic heat pumps and air conditioners R290 has been used in Germany for some years, however, with different level of success. Because of the availability of propane allover the world it has been discussed widely for CFC replacement.

Propane R290 is a possible refrigerant for this application, with good energy efficiency, but special care has to be taken to the flammability of propane.

1.0 Refrigerant

The properties of R290 differ from other refrigerants commonly used in small hermetic systems, as shown in table 1. This leads to a different design of details in many cases.

Table 1: Refrigerant data comparison

Refrigerant	R290	R134a	R404A	R22	R600a
Name	**Propane**	**1,1,1,2-Tetra-flouro-ethane**	**Mixture R125 R143a R134a**	**Chloro-difluoro-methane**	**Isobutane**
Formula	C_3H_8	CF_3-CH_2F	44/52/4	CHF_2Cl	$(CH_3)_3CH$
Critical temperature in °C	96.7	101	72.5	96.1	135
Molecular weight in kg/kmol	44.1	102	97.6	86.5	58.1
Normal boiling point in °C	–42.1	–26.5	–45.8	–40.8	–11.6
Pressure at –25 °C in bar (absolute)	2.03	1.07	2.50	2.01	0.58
Liquid density at –25 °C in kg/l	0.56	1.37	1.24	1.36	0.60
Vapour density at t_o –25/+32 °C in kg/m³	3.6	4.4	10.0	7.0	1.3
Volumetric capacity at –25/55/32 °C in kJ/m³	1164	658	1334	1244	373
Enthalpy of vaporisation at –25 °C in kJ/kg	406	216	186	223	376
Pressure at +20 °C in bar (absolute)	8.4	5.7	11.0	9.1	3.0

1.1 Pressure

A difference between R290 and R134a is found in the pressure level, which is closer to R22 and R404A, e.g. at -25 °C evaporation the pressure is roughly 190 % of R134a, 81 % of R404A, 350% of R600a or almost exactly that of R22. In connection with this the normal boiling point is close to R22 also. Evaporators will thus have to be designed similar as for R22 or R404A.

The pressure level and critical temperature are almost like R22. However, the discharge temperature is much lower. This gives the opportunity to work at higher pressure ratios, means lower evaporating temperatures, or at higher suction gas temperatures.

Fig. 1: Vapour pressure of different refrigerants versus temperature

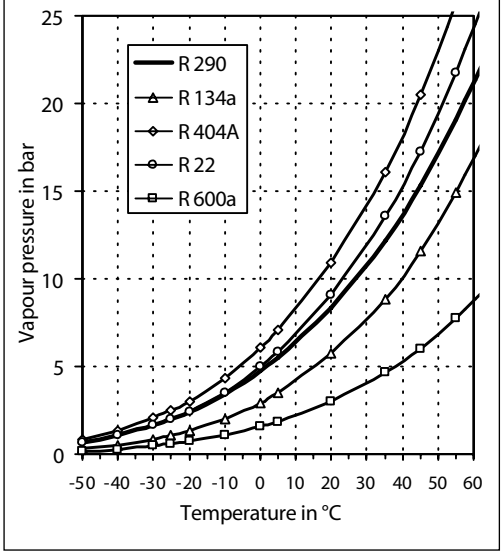

Am0_0141

1.2 Capacity

R290 has roughly 90 % of R22 or 150 % of R134a volumetric capacity at 45 °C condensing temperature, as seen in fig. 2.

Because of this the necessary compressor swept volume is close to R22 also, and 10 % to 20 % larger than for R404A.

The volumetric capacity is approx. 2.5 to 3 times that of R600a. Thus the choice for either R290 or R600a will lead to differences in system design because of very different necessary volume flow for same refrigeration need.

The volumetric cooling capacity is a value calculated from suction gas density and enthalpy difference of evaporation.

Fig. 2: Volumetric capacity of R290, R134a, R404A and R600a, relative to R22, over evaporation temperature, at 45 °C condensing and 32 °C suction gas temperature, no subcooling

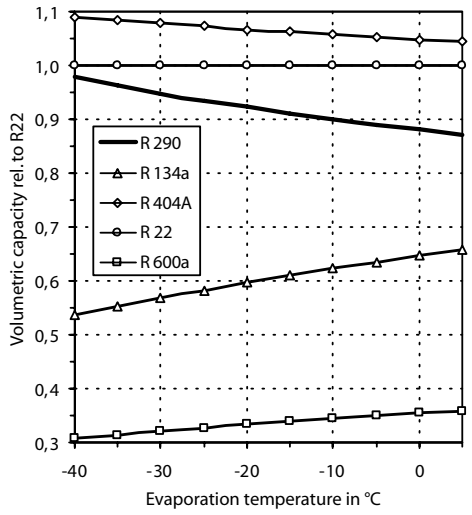

Am0_0142

1.3 Refrigerant charge

If R290 would be charged into an unchanged refrigeration system, charge amount counted in grams would be much lower. However, calculated in cm^3, the charge would be roughly the same liquid volume in the system. This gives charges of approx. 40 % of R22 or R404A charge in grams, according to the data from table 1, which also corresponds with empirical values.

Maximum charge according to safety regulations is 150 g for household refrigerators and similar applications, which corresponds to approx. 360 g of R22 or R404A.

1.4 Purity

Refrigerant R290 specification is not found in international standards. Some data are enclosed in the German standard DIN 8960 of 1998, which is an extended version of ISO 916. The purity of the refrigerant has to be judged from chemical and stability side, for compressor and system lifetime, and from thermodynamic side regarding refrigeration system behaviour and controllability.
The specification in DIN 8960 is a safe general hydrocarbons refrigerant specification, adopted from other refrigerants criteria catalogue and covering propane, isobutane, normal butane, and others. Some points can possibly be accepted a little less narrow for specific refrigerants and impurities combinations after extensive evaluation.

For the time being no refrigerant quality according to an official standard is on the market. The specifications of possible qualities have to be checked with the supplier in details. Liquified petrol gas LPG for fuel applications or technical grade 95 % purity is not sufficient for hermetic refrigeration. Water, sulfur and reactive compounds contents has to be on a lower level than guaranteed for those products. Technical grade 99.5 %, also called 2.5, is widely used.

Table 2: Specification of R290 according to DIN 8960 - 1998

	Specification	Unit
Refrigerant content [1]	≥ 99.5	% by mass
Organic impurities [2]	≤ 99.5	% by mass
1.3-Butadoeme [3]	≤ 5	ppm by mass
Normal Hezane	≤ 50	ppm by mass
Benzene [4]	≤ 1	ppm per substance
Sulfur	≤ 2	ppm by mass
Temperature glide of evap.	≤ 0.5	K (at 5 to 97 % destill.)
Non condensable gasses	≤ 1.5	% vol. of vapour phase
Water [5]	≤ 25	ppm by mass
Acid content	≤ 0.02	mg KOH/g Neutralization
Evaporation residue	≤ 50	ppm by mass
Particles/solids	no	Visual check

1) *This content is not explicitly stated in DIN 8960. Only the impurities are listed and limited. The main content is the rest up to 100 %.*
2) *From compressor point of view a butane content up to approx. 1% is acceptable in the R290.*
3) *This is a maximum value for every single substance of the multiple unsaturated hydrocarbons.*
4) *This is a maximum value for every single aromatic compound.*
5) *This is a preliminary value, to be reviewed with growing experience.*

2.0 Materials

Refrigerant R290 is used with polyolester oil in Danfoss compressors, so material compatibility is almost identical to R134a or R404A situation from oil side. R290 is chemically inactive in refrigeration circuits, so no specific problems should occur there. Solubility with ester oil is good. Direct material compatibility is less problematic. On some rubbers, plastics and especially chlorinated plastics however, problems have been observed, but these materials are normally not present in small hermetic systems. Some materials, on which problems have been reported by different testers, are listed in the table 3. On critical materials test have to be performed for the specified use.

Table 3: Material compatibility

Material	Compatible
Butylic rubber	no
Natural rubber	no
Polyethylene	depends on conditions
PP	no
PVC	no
PVDF	no
EPDM	no
CSM	no

2.1 Driers

For domestic refrigerators the common desiccant is a molecular sieve, a zeolithe. For R290 a material with 3 Å pores is recommended, like for R134a, e.g. UOP XH 7, XH 9 or XH 11, Grace 594, CECA Siliporite H3R. Pencil driers for R134a can possibly be used for R290, if they are tested according to IEC / EN 60 335 burst pressure demands.

If hardcore driers are to be used, please ask the manufacturer for compatibility to R290. Danfoss type DCL driers can be used.

3.0 Flammability and safety

The main disadvantage discussed in connection with R290 use is the risk based in its flammability. This leads to necessity for very careful handling and safety precautions.

Table 4: Flammability of propane

Lower explosion limit (LEL)	2.1%	approx. 39 g/m³
Upper explosion limit (UEL)	9.5%	approx. 177 g/m³
Minimum ignition temperature	470 °C	

Because of the flammability of propane in a wide concentration range safety precautions are necessary, on the appliance itself and in the manufacturing factory. The risk assessments behind these two situations are quite different. Main common starting point is, that accidents need to have two essential preconditions. One is the flammable mixture of gas and air and the other is the ignition source of a certain energy level or temperature.

These two have to be present together for combustions, so avoidance of this combination has to be proven.

Danfoss Compressors for R290 have internal protectors and PTC starters or special relays, both preventing from sparks coming out near the compressor, because it can not be guaranteed to hold surrounding air below LEL in case of leaks close to the compressor. They are equipped with a yellow label warning for flammable gas, like shown in fig. 3.

Fig. 3: Yellow label warning

Am0_0030

3.1 Appliance

For safety testing of household refrigerators and similar applications a standard has been established in Europe, IEC Technical Sheet TS 95006. It is also transferred to an amendment to IEC / EN 60 335-2-24, which is the normal electrical safety standard.

Approvals of refrigerators using hydrocarbons as refrigerant are done according to the procedures of the TS in Europe since 1994.

The methodology of TS and the amendments derived from this are base for the following short description.

Other applications have to take different national standards and legislation into account, e.g. EN 378, DIN 7003, BS 4344, SN 253 130, which can have different demands.

- All electrical elements switching during normal operation are taken to be possible ignition sources. This includes thermostat, door contacts for lighting, on/off and other switches, like superfrost, compressor relays, external klixon, defrost timers and so on.
- All refrigerant containing parts are taken to be possible refrigerant sources through leaks. This includes evaporators, condensers, door heaters, tubings and the compressor.
- Maximum refrigerant charge is set to be 150 g. By keeping the charge to max. 25 % of lower explosion level LEL, which is approx. 8 g/m3, for a standard kitchen, ignition risk is very low, even if refrigerant distribution in case of leakage is uneven for some time first.

The main target of the safety precautions is to separate rooms with refrigerant containing parts from rooms with switching elements.

Fig. 4: Appliance design variants.

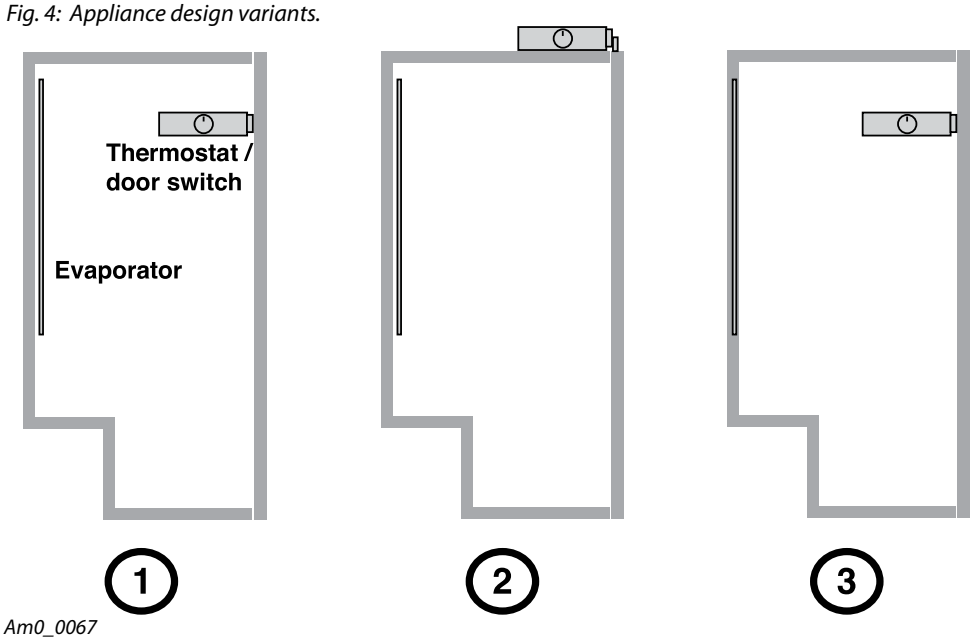

Am0_0067

In fig. 4 three principal possibilities are shown. Option 1 has evaporator and thermostat/door switch both located in the storage volume. This is critical for flammable refrigerants and should not be used. Option 2 has evaporator inside and thermostat/door switch outside, on top. This normally gives a safe solution. Option 3 has thermostat/door switch inside, but evaporator foamed in place behind the inner liner. This is a possible solution used in many cases. Choosen option has to be designed and proven in leakage test according to TS 95006 and IEC / EN 60335 demands.

On many refrigerator or freezer designs this separation is already the existing situation.

- Large free standing bottle coolers and freezers often have all electrical switches in the top panel.
- Some refrigerators have the evaporators hidden behind the liner, in the foam, means not in the cabinet space where thermostats and so on are allowed in this case.
- Critical situation is given whenever it is not possible to avoid evaporator and thermostat or
- Switches being in the cabinet. In this case two possibilities are left:
  - Thermostats and switches have to be changed to sealed versions preventing gas from penetrating them and thus reaching the switching contacts. Danfoss offers electronic thermostats suitable for this application.
  - Fans inside the refrigerated compartment have to be safe and sparkfree even if blocked.
- Electrical connectors and lamp holders have to be proven according to certain specifiations.

3.1 Appliance *(continued)*

Every R290 appliance type has to be tested and approved according to the TS / IEC / EN proceedures, by an independent institute, even if all above mentioned criteria are included in the design. Please see the standards for details.

Instructions for use should contain some informations and warnings for careful handling, like not to defrost freezer compartments with knives, and for installing in a room with at least 1 m^3 of space per 8 g of charge, the latter to be seen on the type label.

Systems using relays or other electrical components near the compressor must meet the specifications. These are including

- Fans at the condenser or compressor must be sparkfree even when blocked or over loaded. Either they have to be designed not to need a thermal switch, or this switch has to meet IEC 60079-15.
- Relays have to meet IEC 60079-15 or being placed where a leakage can not produce a flammable mixture with air, e.g. in a sealed box or at high altitude. The starting accessory of Danfoss SC compressors is delivered with a long cable for placing in a separate electrical installation box.

The refrigerant containing system and the safety system design is to be approved and controlled regularly by local authorities normally. Below the design principles for installations in Germany are given. In many details this is based on regulations for liquified gas installations. Specialities are found around the charging stations, where gas connectors are to be handled frequently and a charging of the appliances occurs.

3.2 Factory

The basic principles for safety are

- Forced ventilation to avoid local accumulation of gas.
- Standard electrical equipment except for the ventilation fans and safety systems.
- Gas sensors continuously monitoring in possible leakage areas like around charging stations, with alarm and doubling of ventilation at 15 % to 20 % of LEL and with disconnection of all non explosion proof electrics in the monitored area at 30 % to 35 % of LEL, leaving the fans running at full speed.
- Leakage test on appliances before charging to avoid charging of leaking systems.
- Charging stations designed for flammable refrigerants and connected to the safety systems.

Safety system design can be supported by suppliers of charging stations and gas sensing equipment in many cases.
For handling of R290 in small containers, the rules are less strict in some countries.

4.0 Refrigeration system design

In many cases of transition from non flammable refrigerants to R290 the appliance cabinet has to be modified for safety reasons as listed in section 3.1. But changes can additionally be necessary for other reasons.

Refrigerant containing system parts have according to IEC / EN 60335 to withstand a specified pressure without leaking. High pressure side has to withstand saturation overpressure of 70 °C times 3.5, low pressure side has to withstand saturation overpressure of 20 °C times 5. This gives the following for R290:

- 87 bar overpressure High Pressure side
- 36.8 bar overpressure Low Pressure side

National standards could have different specifications, depending on the application.

4.1 Heat exchangers

The refrigeration system efficiency will normally not cause a need for changing evaporator or condenser size, means outer surface can be left the same as with R22 or R404A.

Inside design of the evaporator possibly needs some modification, because the refrigerant volume flow is different, according to the compressor swept volume. To keep the refrigerant flow speed within the recommended range of 3 to 5 m/s it may be necessary to adopt the cross flow sections.

Rollbond evaporators can maybe not be used because of the high demands on burst pressure. Special care has to be taken when designing the accumulator in the system. When using R22 or R134a the refrigerant is heavier than the oil used, while with R290 the refrigerant is less heavy, as can be seen in the data table 1.

This can lead to oil accumulation if the accumulator is too large, especially too high, and has a flow path which does not guarantee emptying sufficiently during startup phase of the system.

4.2 Capillary

For R290 experience shows the need for a capillary flow rate almost similar to R404A. At least this is a good starting point for optimization.

As with R134a, R404A and R600a the suction line heat exchanger is very important for system energy efficiency of R290, which it was not for R22, see fig. 5. The figure shows increase of COP with superheat from few K up to +32 °C return gas temperature, where a range from +20 °C to approx. +32 °C is usual for small hermetic systems.

This large increase in COP for R290 is caused by a high vapour heat capacity. In combination with the need for keeping the refrigerant charge close to maximum possible in the system, thus giving no superheat at evaporator outlet, the suction line heat exchanger has to be very efficient for preventing air humidity condensation on the suction tube. In many cases an elongation of the suction line and capillary gives efficiency improvements.

The capillary itself has to be in good heat exchanging contact with the suction line for as long a part of total length as possible.

At high superheat, with good internal heat exchange, the theoretical COP of R290, R600a and R134a is higher than for R22. At very low superheat the COP of R290, R600a and R134a is lower than for R22. The R290 behaviour is similar to R134a, with respect to internal heat exchange.

Fig. 5: Theoretical COP increase of different refrigerants versus suction temperature with adiabatic compression, internal heat exchange, at -25 °C evaporation, 45 °C condensation, no subcooling before internal heat exchanger

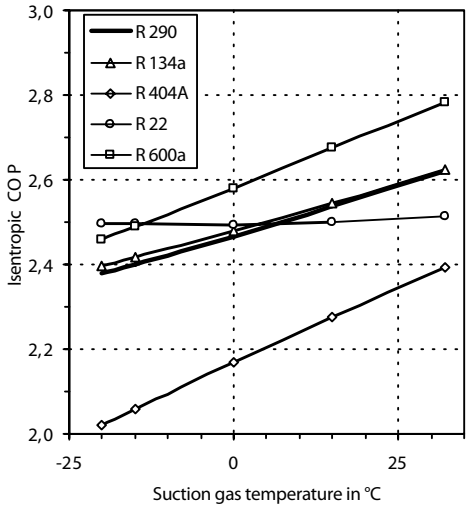

Am0_0143

4.3 Evacuation

Generally the same rules for evacuation and processing are valid as for R22, R134a or R404A systems. The maximum allowable content of non condensable gases is 1 %.

Too high level of non condensables increases energy consumption because of higher condensing temperature and a portion of the transported gas being inactive. It can additionally increase flow noise.

4.4 Cleanliness of components

The specifications for cleanliness are generally comparable to R22 or R134a. The only official standard on cleanliness of components for refrigeration use is the DIN 8964, which also is used in several countries outside Germany.

It specifies maximum contents of soluble, insoluble and other residues. The methods for determining soluble and insoluble contents are to be modified for the actual refrigerant R290, but in principle the same limits are useful.

5.0 Service

Servicing and repair of R290 systems is possible for skilled and well trained service technicians. Please see note CN.73.C for details.

Local laws and regulations have to be taken into account also. It needs very careful handling because of the flammability of the gas, which is a potential danger during work on the refrigeration system.

A good ventilation of the room is necessary and the discharge of the vacuum pump has to be lead to open air.

The equipment of the service technician has to meet the requirements of R290 in terms of evacuation quality and refrigerant charge accuracy. An electronic scales is recommended to control refrigerant charge to within the needed accuracy.

Conversion of a R22, R502 or R134a system to R290 is not recommended by Danfoss, because these systems are not approved for flammable refrigerant use, so electrical safety is not proven to be according to the needed standards.

References

TS 95006	Refrigerators, food-freezers and ice-makers using flammable refrigerants, Safety Requirements, Ammendment to IEC 60 335-2-24, CENELEC, July 1995
CN.86.A	Driers and Molecular Sieves Desiccants
CN.82.A	Evaporators for Refrigerators
CN.73.C	Service on Household Refrigerators and Freezers with New Refrigerants
CN.60.E	Practical Application of Refrigerant R600a Isobutane in Domestic Refrigerator Systems
EN 60335-2-24	Safety of household and similar appliances Part 2: Particular requirements for refrigerators, food freezers and ice-makers

Notes

Contents

1.0 General information on compressors installation and service 50
2. Product range and Nomenclature 51
2.1 Maneurop® Reciprocating Compressors MT/MTZ series for R22/R134a/R404A/R407C MBP ... 51
2.2 Maneurop® Reciprocating Compressors NTZ Series for R404A LBP 52
2.3 Application envelope 53
2.4.1 Compressor Handling 55
2.4.2 System Cleanliness 55
2.4.3 Refrigerant Charging 56
2.4.4 System Design Recommendations 56
2.4.5 Refrigerant Effect 57
2.4.6 Liquid Floodback during Operation 58
2.4.7 Piping Design 58
2.4.8 Operating Voltage Range 60
2.4.9 Cycle Rate Limit 60
2.4.10 Sound Level 61
2.4.11 Vibrations & Pulsations 61
3.0 Performer Scroll Compressors
(type: SM, SY, SZ, SH, HRM/P/H, HLM/P/H, HCM/P/H/J, HHP, MLZ) 62
3.1.1 Functions 62
3.1.2 Labels 63
3.2 Application envelope 64
3.3 Application Guidelines 69
4.0 Trouble Shooting 72
4.1 Why Compressors Fail 73

1.0 General information on compressors installation and service

a) Rules to be followed in maintenance, repair and use:
Installation and servicing of the compressor by qualified personnel only. Follow the instructions and sound refrigeration engineering practice relating to installation, commissioning, maintenance and service.

b) Considerations for transportation and shipment:
- Handle the compressor with care. Use the dedicated handles in the packaging. Use the compressor lifting lug and use appropriate and safe lifting equipment.
- Store and transport the compressor in an upright position.
- Store the compressor between -35°C and 50°C.
- Don't expose the compressor and the packaging to rain or corrosive atmosphere.

c) Warnings against hazards or harm to humans or the environment during the use:
Never use the compressor in a flammable atmosphere. Never pressurize the circuit with oxygen or dry air. This could cause fire or explosion. Internal pressure and surface temperature are dangerous and may cause permanent injury. Maintenance operators and installers require appropriate skills and tools. Tubing temperature may exceed 100°C and can cause severe burns.
Ensure that periodic service inspections to ensure system reliability and as required by local regulations are performed. Under all circumstances, the EN378 (or other applicable local safety regulation) requirements must be fulfilled.

d) Information on misuse:
The compressor must only be used for its designed purpose(s) and within its scope of application. Read carefully the Instructions before the installation. Maintenance and repair should be made only by operators and installers with appropriate skills and tools.

2. Product range and Nomenclature

2.1 Maneurop® Reciprocating Compressors MT/MTZ series for R22/R134a/R404A/R407C MBP

Maneurop® Reciprocating Compressors MT/MTZ series for R22/R134a/R404A/R407C MBP

Maneurop® reciprocating compressors from Danfoss Commercial Compressors are specially designed for applications with a wide range of operating conditions. All components are of high quality and precision in order to assure a long product life.

Maneurop® MT and MTZ series compressors are of the hermetic reciprocating type and are designed for medium and high evaporating temperature applications.

The compressor design allows for the motor to be 100% suction-gas cooled.

The positive benefits of internal motor protection, high eficiency circular valve design and high torque motors provide for a quality installation.

The MT series can also be applied with several R22 based refrigerant blends (substitute refrigerants), using 160 ABM alkylbenzene as lubricant. The MTZ series is specifically designed for use with the HFC refrigerants R407C, R134a, R404A, and R507A, using 160PZ polyester oil as lubricant.

MTZ compressors can be used in new installations and also to replace Maneurop® MTE compressors in existing installations.

MT and MTZ compressors have a large internal free volume that protects against the risk of liquid hammering when liquid refrigerant enters the compressor.

MT and MTZ compressors are fully suction-gas cooled. this means that no additional compressor cooling is required and allows the compressors to be insulated with acoustic jackets, to obtain lower sound levels, without the risk of compressor overheating.

MT and MTZ compressors are available in 22 different models with displacement ranging from 1.84 to 16.57 in^3/rev. seven different motor voltage ranges are available for single and three phase power supplies at 50 and 60 Hz.

Most compressors exist in two versions:
- standard version
- VE version (oil equalization + oil sight glass)

A: Model number
B: Serial number
C: Refrigerant
D: Supply voltage, Starting current & Maximum current
E: Housing service pressure
F: Factory charged lubricant

2.2 Maneurop® Reciprocating Compressors NTZ Series for R404A LBP

The Maneurop® NTZ series from Danfoss Commercial Compressors is a range of hermetic reciprocating compressors for low evaporating temperature applications. These compressors gradually replace the existing LTZ range.

The NTZ series is engineered as a true low temperature compressor, optimised at -35°C with an extended evaporating temperature range from -45°C up to -10°C. The compressors can be operated at a return gas temperature (suction gas temperature) of 20°C even at low evaporating temperatures.

A liquid injection system is not required. All components are of high quality and precision to assure a long product life.

NTZ compressors have a large internal free volume that helps to reduce the risk of liquid hammering. The electrical motor is fully suction gas cooled which means that no additional body cooling is required and it allows the compressor to be insulated with an acoustic hood when the installation requirements call for extra low sound characteristics.

Technical specifications and nominal ratings

Com-pressor	Swept volume cm^3/rev	Displacement		Nominal ratings*				Number of cylin-ders	Oil charge litre	Net weight kg
		50 Hz 2900 rpm m^3/hr	60 Hz 3500 rpm m^3/hr	Cooling capacity W	COP W/W	Cooling capacity W	COP W/W			
NTZ048	48	8.4	10.1	995	1.15	1190	1.13	1	0.95	21
NTZ068	68	11.8	14.3	1749	1.15	1870	1.10	1	0.95	23
NTZ096	96	16.7	20.2	2002	1.15	2395	1.16	2	0.95	35
NTZ108	108	18.7	22.6	2465	1.16	2788	1.10	2	0.95	35
NTZ136	136	23.6	28.5	3225	1.11	3739	1.12	2	0.95	35
NTZ215	215	37.5	45.2	4948	1.19	5886	1.19	4	0.95	62
NTZ271	271	47.3	57.0	6955	1.24	8058	1.21	4	0.95	64

Cross reference list LTZ to NTZ (new)
– dimensions, pipe connections and foot print of NTZ is similar to the corresponding LTZ

Type LTZ	Type NTZ	Code No. – Single pack NTZ
LTZ22-5VI	**NTZ48-5VI**	120F0087
LTZ28-5VI	**NTZ68-5VI**	120F0088
LTZ22-4VI	**NTZ48-4VI**	120F0001
LTZ28-4VI	**NTZ68-4VI**	120F0002
LTZ40-4VI	**NTZ96-4VI**	120F0003
LTZ44-4VI	**NTZ108-4VI**	120F0004
LTZ50-4VI	**NTZ136-4VI**	120F0005
LTZ88-4VI	**NTZ215-4VI**	120F0006
LTZ100-4VI	**NTZ271-4VI**	120F0007

2.3 Application envelope

Look at the application envelope to see, if the evaporation and the condensing temperature of a compressor is ok (in the envelope) or maybe not (outside of envelope).

If e.g. the current evaporation of a MTZ compressor is lower than the low limit of the MTZ (-30°C at R404A) envelope, the compressor can severly be damaged.

One of the technical points here is that there is not sufficient suction gas cooling any more for the compressor as the lower the evaporation goes, the less massflow of refrigerant is travelling throu the compressor.

In cases were the maximum evaporation temperature is exeeded there is also a danger for the compressor. In this condition the internal motor is too weak for the high evaporation. In order to avoid that, a crankcase regulator or a MOP expansion valve can be used.

Maneurop, Compressor Series MTZ
Application Envelope R407C at Dew Point

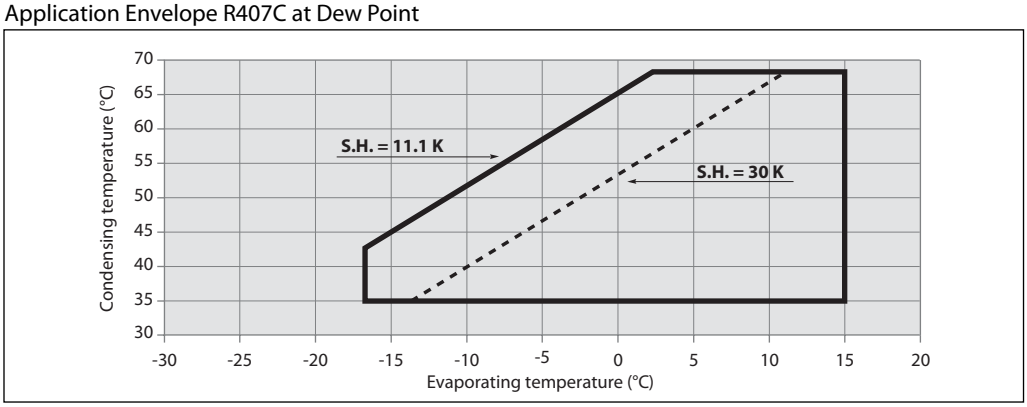

Maneurop, Compressor Series MTZ
Application Envelope R134a

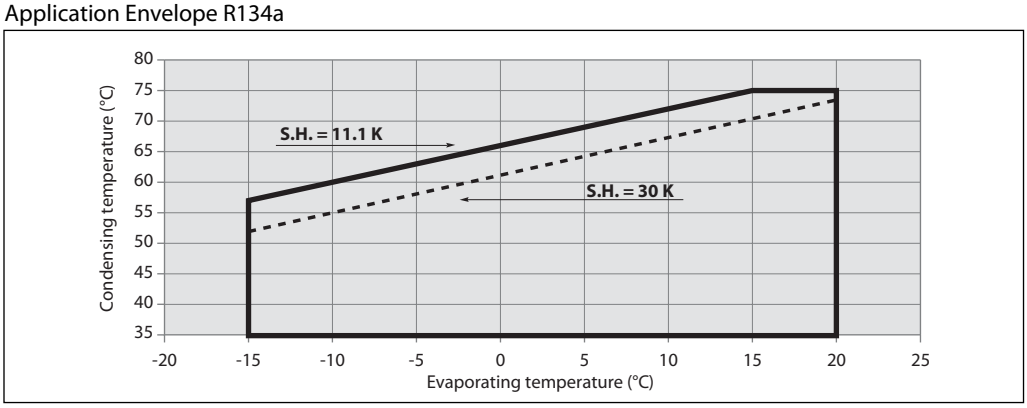

Maneurop, Compressor Series MTZ
Application Envelope R404A/R507A

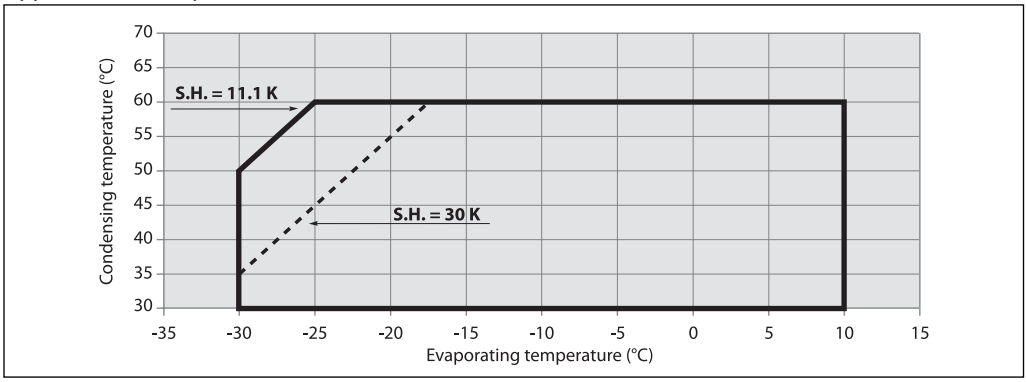

2.3
Application envelope
(continued)

Maneurop, Compressor Series NTZ
Application Envelope R404A/R507

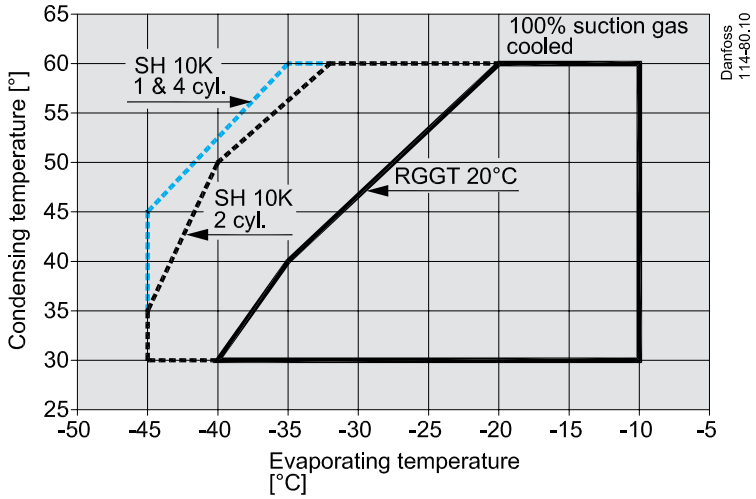

2.4.1 Compressor Handling

- Maneurop® Compressors are provided with a lifting lug
- This lug should always be used to lift the compressor
- Please do not use the lifting lug to lift the complete installation

Lifting lug

2.4.2 System Cleanliness

- System contamination is one of the main factors affecting equipment reliability and compressor service life
- During the manufacturing process system contamination can be caused by:
  - Brazing and welding oxides
  - Filings and particles from removing burrs from pipe-work
  - Brazing flux
  - Moisture and air
- Use only clean and dehydrated refrigeration grad copper tubes and silver alloy brazing material
- Follow the instructions below regarding
  - Leak detection
  - System pressure test
  - Air & moisture removal
- Never drill holes in the pipe-work after completion of the installation

Leak Detection

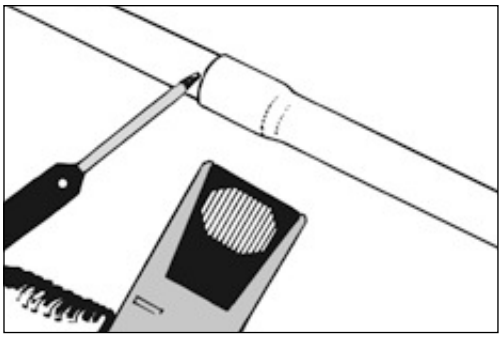

- Leak detection can be carried out using a dry nitrogen.
- Never use other gases such as oxygen or acetylene. These gases can form an flammable mixture.
- If the system is up and running, an electronic dedection devise can be used for leak detection of the system.

System Pressure Test

- It is recommended that an inert gas such as nitrogen be used for pressure testing
- When performing a system pressure test, the max. allowed pressure for the different components should not be exceeded

Max. compressor test pressure	
Low pressure side	25 bar (g)
High pressure side	30 bar (g)

- Do not exceed 30 bar pressure difference between high – and low pressure side of the compressor → This will open the internal compressor relief valve

2.4.2
System Cleanliness
(continued)

Air & Moisture

- Reduce service life and increase condensing pressure, and cause excessively high discharge temperature, which can destroy the lubricating properties of the oil
- Increase the risk of acid formation
- Giving rise to copper platting
- Can cause mechanical and electrical compressor failure

To avoid these problems use a vacuum pump and create a minimum vacuum of 0.67 mbar (other units 500 µHg 66 Pa)

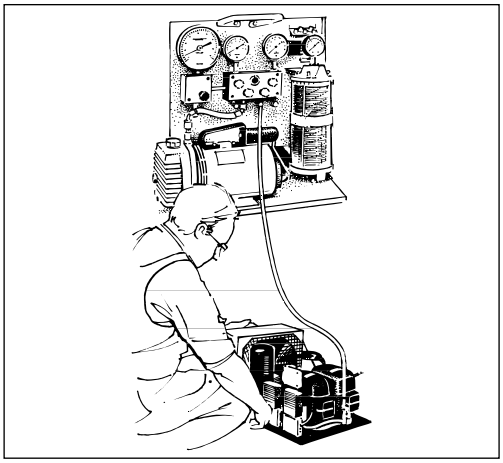

2.4.3
Refrigerant Charging

- The refrigerant charge quantity must be suitable for both winter and summer operation
- If the system refrigerant charge exceed the charge limits additional precautions can be required, such as:
  - Crankcase heater
  - Pump-down cycle
  - Suction accumulator

2.4.4
System Design Recommendations

Crankcase heater

- The appropriate oil temperature is maintained under all ambient conditions → Oil temperature has to be maintained 10K above the saturated LP temperature of the refrigerant
- Under extreme conditions a belt type crankcase heater must be positioned on the compressor shell → Close to the oil sump
- Belt heaters are not self-regulating → Control must be applied
- The belt heater must be energised 12 hours before restarting the compressor following an extended shutdown period

2.4.4 System Design Recommendations *(continued)*

Pump-Down Cycle

- If the crankcase heater is not able to maintain the oil temperature at 10K above the saturated LP temperature of the refrigerant a *pump-down cycle is required*
- A pump-down cycle design is required when evaporators are fitted with electrical defrost heaters

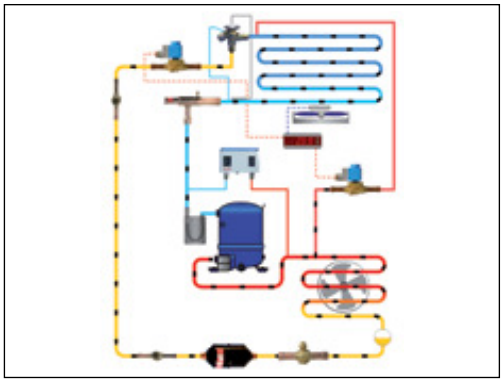

Suction accumulator

- A suction line accumulator offers considerable protection against refrigerant flood back at start-ups, during operation and in hot gas defrost systems
- As a general rule, size the accumulator for at least 50% of the total system charge
- Suction accumulator can not protect 100% the liquid migration into the compressor.

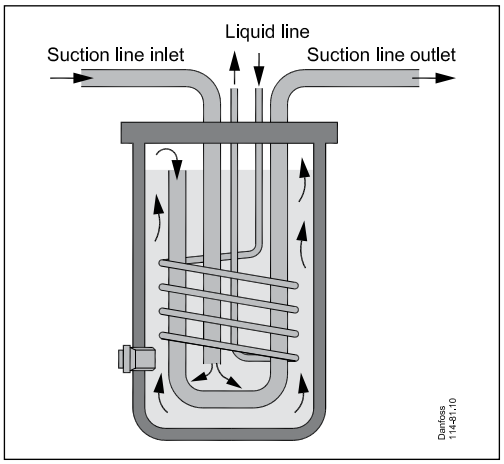

2.4.5 Refrigerant Effect

Liquid Refrigerant

- Refrigeration compressors are designed as vapour compressors.
- Maneurop®reciprocating compressors have a large internal volume and can therefore handle small amount of liquid refrigerant without major problems during the running time.
- Liquid refrigerant return or migration to the compressor could be the reason for:
  - Oil dilute
  - Wash oil out of bearings
  - Result in high oil carry over
  - Resulting in loss of oil from the sump
  - Reduced service life of the compressor

Off-cycle migration

- During system standstill and after pressure equalisation refrigerant will condense in the coldest part of the system – this can be easily the compressor
- A large amount of refrigerant will dissolve in the compressor oil until the oil is completely saturated
- At compressor start the pressure in the crankcase decreases rapidly
- The refrigerant will violently evaporate from the oil, causing the oil to foam → "Boiling"

2.4.5
Refrigerant Effect
(continued)

Off-cycle migration (continued)

- The negative effects from migration on the compressor are:
- On start-up, the oil refrigerant mixture is then used to lubricate the bearing surfaces. this mixture-being a poor lubricant-causes wearing within the compressor.
- Oil foam, transported by refrigerant gas and discharged into the system, causes loss of oil and in extreme situations *risk for oil slugging.*

2.4.6
Liquid Floodback during Operation

- Normal superheat values at compressor suction: 5 to 30K
- However the refrigerant leaving the evaporator can contain an amount of liquid due to different reasons:
  - Wrong dimensioning, wrong setting or malfunction of expansion device.
  - Evaporator fan failure, iced evaporator or blocked air filters.
- In such situations liquid refrigerant will continuously enter the compressor and destroy it.

  The negative effects from continuous liquid flood back are:
  - Permanent oil dilution.
  - Very low sump temperature leading to migration when compressor will shut down.
  - In extreme situations with high system refrigerant charge and large amounts of flood back, liquid slugging could occur.

2.4.7
Piping Design

- Oil in a refrigeration circuit is required to lubricate moving parts in the compressor.
- During system operation small quantities of oil will continuously leave the compressor with discharge gas and this oil has to return to the compressor.
- Too large amounts of oil in the system will have a negative effect on condenser and evaporator efficiency.
- *Only correct piping design can ensure a good oil balance in the system*

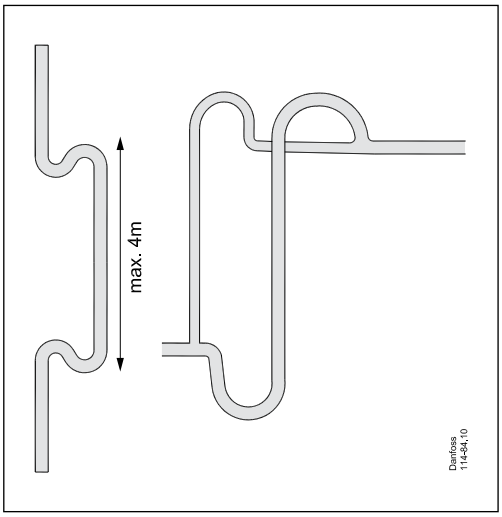

Horizontal Suction Line

- Slope of 0.5% in the direction of refrigerant flow (5 mm per m)
- Cross-section shall be such that the resulting gas velocity is at least 4 m/s

Vertical Suction Line

- A gas velocity of 8 to 12 m/s is required.

2.4.7
Piping Design
(continued)

- A U-trap is required at the foot of each vertical riser.
- The length of each U-trap must be as short as possible.
- *Gas velocities higher than 12 m/s will not contribute to significantly better oil return → Higher noise system and higher suction line pressure drops.*

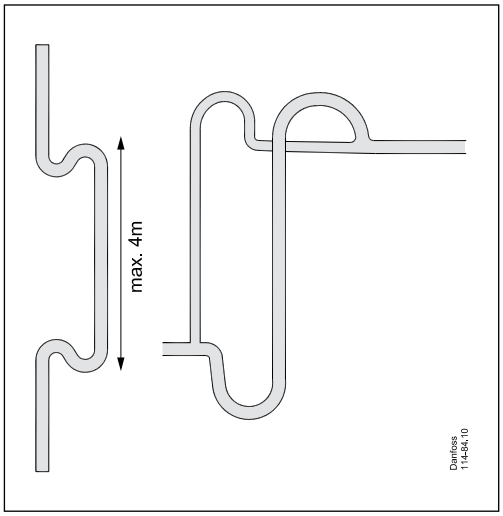

Suction Line

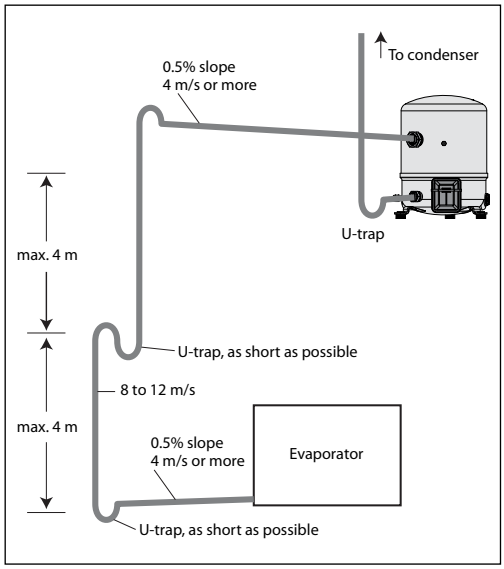

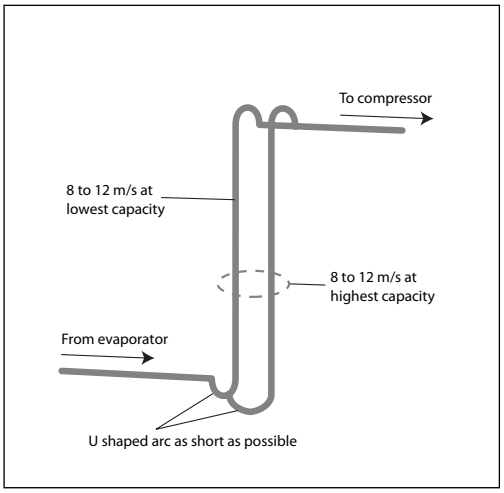

Discharge Line

- Where the condenser is mounted above the compressor, a suitably sized U-trap may be necessary to prevent oil return to the discharge side of the compressor during standstill.
- It will also help eliminate liquid refrigeration flood back from the condenser to the compressor.
- In case of long vertical discharge line the check valve can be installed in the top of the line.

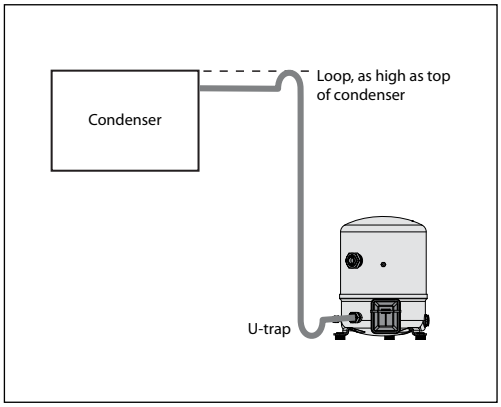

2.4.7 Piping Design *(continued)*

Suction Line
If there are several evaporators these must be connected so that oil cannot flow from operating evaporator to non operating one.

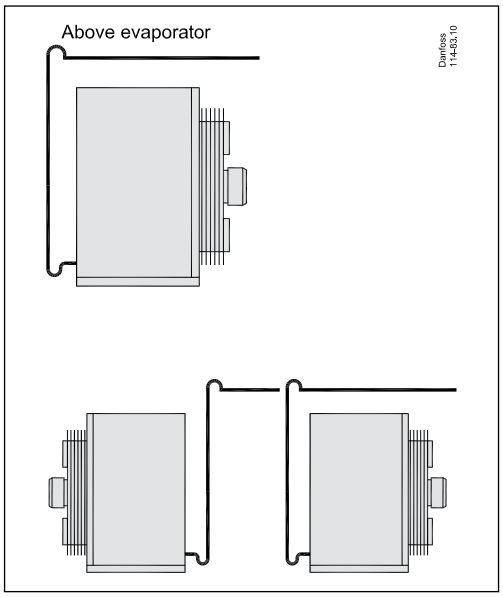

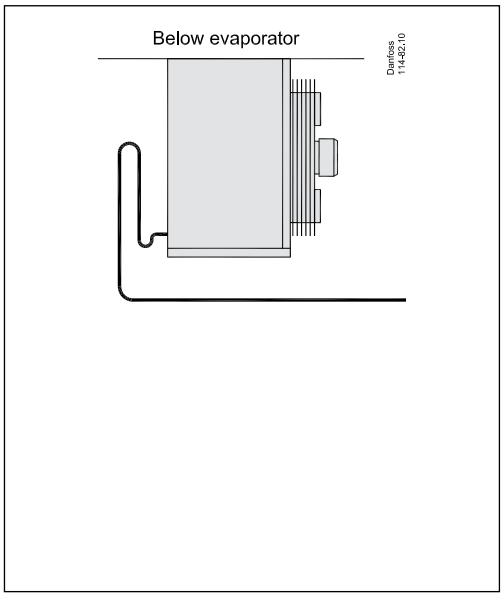

2.4.8 Operating Voltage Range

- The voltage applied to the motor terminals must always be within the limits shown in the table.
- The max. allowable imbalance for 3-phase compressors is 2%
- Voltage imbalance is given by the formula:

$$\frac{\lfloor V_{avg} - V_{1-2} \rfloor + \lfloor V_{avg} - V_{1-3} \rfloor + \lfloor V_{avg} - V_{2-3} \rfloor}{2 \times V_{avg}}$$

V_{avg} = Average voltage of phases 1, 2, 3

V_{1-2} = Voltage between phases 1 and 2

V_{1-3} = Voltage between phases 1 and 3

V_{2-3} = Voltage between phases 2 and 3

Content code	Nominal voltage	Voltage application range
1	208-230 V/1 ph/60 Hz	187-253 V
3	200-230 V/3 ph/60 Hz	180-253 V
4	380-400 V/3 ph/50 Hz 460 V/3 ph/60 Hz	342-400 V 414-506 V
5	230 V/1 ph/50 Hz	207-253 V
6	230 V/3 ph/50 Hz	207-253 V
7	500 V/3 ph/50 Hz 575 V/3 ph/60 Hz	450-550 V 517-632 V
9	380 V/3 ph/60 Hz	342-418 V

2.4.9 Cycle Rate Limit

- There may be no more than 12 starts per hour
- More starts reduces the service life of the motor-compressor unit.
- A time-out of 3 minutes, with comparable running time is recommended.
- Erratic thermostat, too low pressure differential setting for a pressure switch, loose wire connection must be avoided.

2.4.10 Sound Level

- Sound produced by a compressor is transmitted in every direction by the ambient air, the mounting feet, the pipe work and the refrigerant in the pipe work.
- The easiest way to reduce the sound transmitted through ambient air is to fit a acoustic hood accessory.
  - Maneurop®compressors are 100% suction gas cooled and so can run safely with 10K superheat & covered by such device

Running compressors vibrate and generate refrigerant gas pulsations

2.4.11 Vibrations & Pulsations

- The mounting grommets delivered with the compressor should always be used.
- The compressor should never be directly mounted to the base frame without grommets.
- Suction-and discharge lines must have adequate flexibility in 3 planes.
- Eventually external flexible pipe type "anaconda" may be required installed in parallel to motor crankshaft.

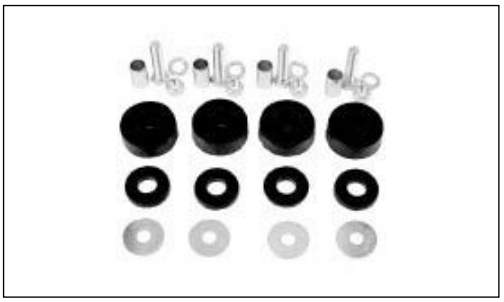

3.0 Performer Scroll Compressors (type: SM, SY, SZ, SH, HRM/P/H, HLM/P/H, HCM/P/H/J, HHP, MLZ)

3.1.1 Functions

In a Performer® scroll compressor, the compression is performed by two scroll elements located in the upper part of the compressor. Suction gas enters the compressor at the suction connection. As all of the gas flows around and through the electrical motor, thus ensuring complete motor cooling in all applications, oil droplets separate and fall into the oil sump. After exiting the electrical motor, the gas enters the scroll elements where compression takes place. Ultimately, the discharge gas leaves the compressor at the discharge connection.
The figure below illustrates the entire compression process. The centre of the orbiting scroll (in grey) traces a circular path around the centre of the fixed scroll (in black). This movement creates symmetrical compression pockets between the two scroll elements.

Low-pressure suction gas is trapped within each crescent-shaped pocket as it gets formed; continuous motion of the orbiting scroll serves to seal the pocket, which decreases in volume as the pocket moves towards the centre of the scroll set increasing the gas pressure. Maximum compression is achieved once a pocket reaches the centre where the discharge port is located; this stage occurs after three complete orbits. Compression is a continuous process: the scroll movement is suction, compression and discharge all at the same time.

Danfoss scroll compressors will only compress gas while rotating counter-clockwise (when viewed from the compressor top). Care must be taken during installation to ensure that the compressor operates in the correct direction.

Eventual reverse rotation can be detected by following phenomena; the excessive noise, no pressure differential between suction and discharge, and line warming rather than immediate cooling.

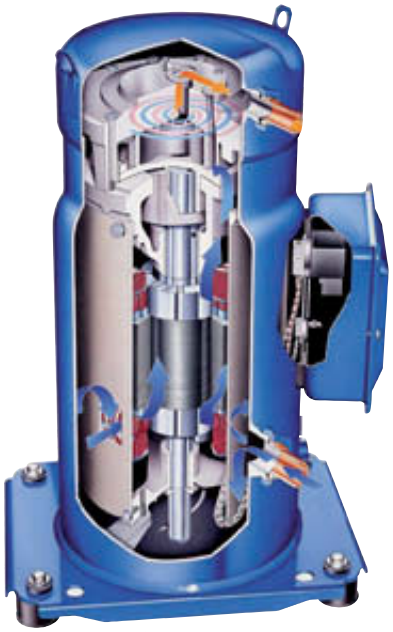

SM / SY / SZ 084-120.148-380

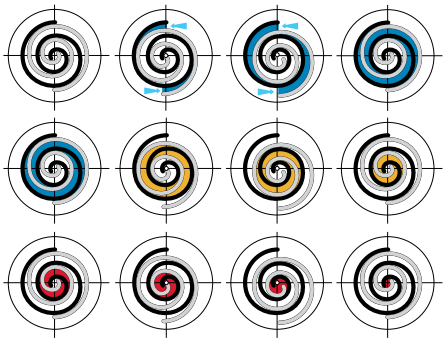

First orbit: ***SUCTION***
Second orbit: ***COMPRESSION***
Third orbit: ***DISCHARGE***

3.1.2 Labels

A: Model number
B: Serial number
C: Refrigerant
D: Supply voltage,
Starting current & Maximum current
E: Housing service pressure
F: Factory charged lubricant

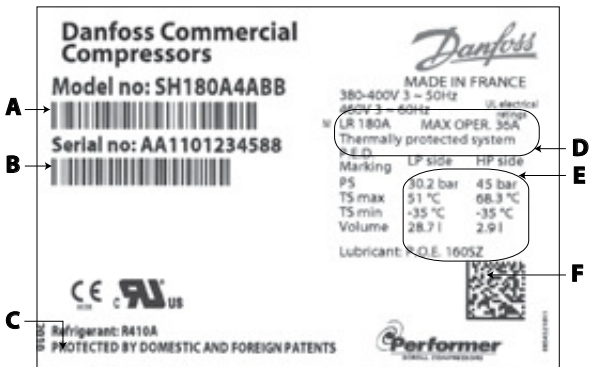

A: Model number
B: Technical number
C: Serial Number
D: Manufacturing year
E: Internal protection
F: Supply voltage range
G: Run capacitor
H: Locked rotor current
Maximum operating current
I: Lubricant type and nominal charge
J: Approved Refrigerant

A: Model number
B: Technical number
C: Serial Number
D: Internal protection
E: Supply voltage range
F: Run capacitor
G: Locked rotor current
Maximum operating current
H: Lubricant type and nominal charge
I: Approved Refrigerant
J: Manufacturing year

3.2 Application envelope

If looking for the right compressor, the application envelope of a specific compressor with the specific refrigerant can be of great help.

Always make sure, that you are having a look on the right type of compressor but also at the right table with the wanted refrigerant. The envelopes of the same compressor but different refrigerant can be totally different.

Especially at scroll compressors if the current evaporation is lower than the low limit (-22°C at R407C dew point SZ 300), the compressor can severly be damaged.

One of the technical points here is that there is not sufficient suction gas cooling any more for the compressor as the lower the evaporation goes, the less massflow of refrigerant is travelling throu the compressor.

In terms of scroll there is also the problem of exessive discharge temperatures when going too low in the evaporation. A discharge thermostat set to 120 - 135°C can help in these cases.

Just connect this thermostat in the supply path of the compressor contactor (before A1 of the contactor) and the compressor will be save (stop) as soon as the discharge temperatur reaches too high values. The reason for that can also be refrigerant loss.

Performer® Scroll Compressor Series "SZ"
Application Envelope R407C
(Dew Temperature)

SZ084 to SZ185

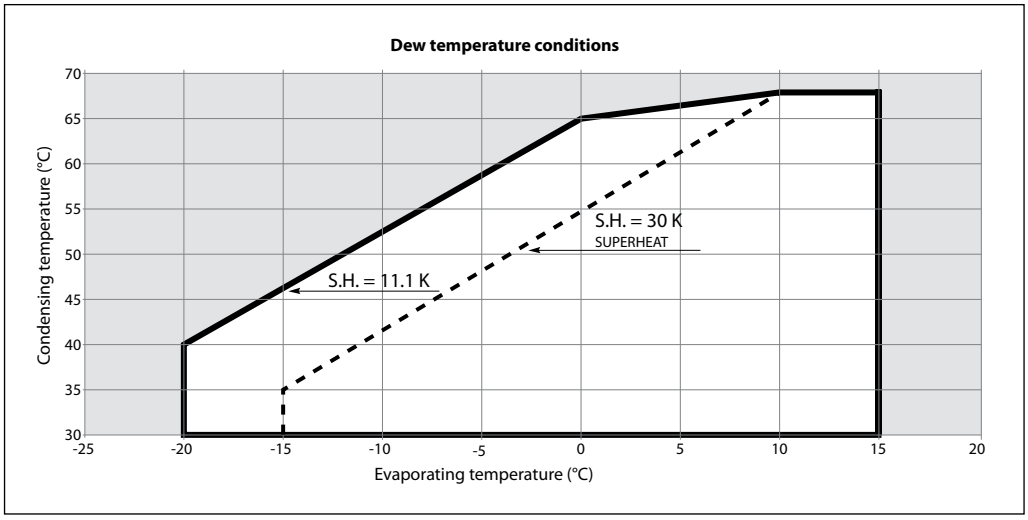

SZ240 to SZ380

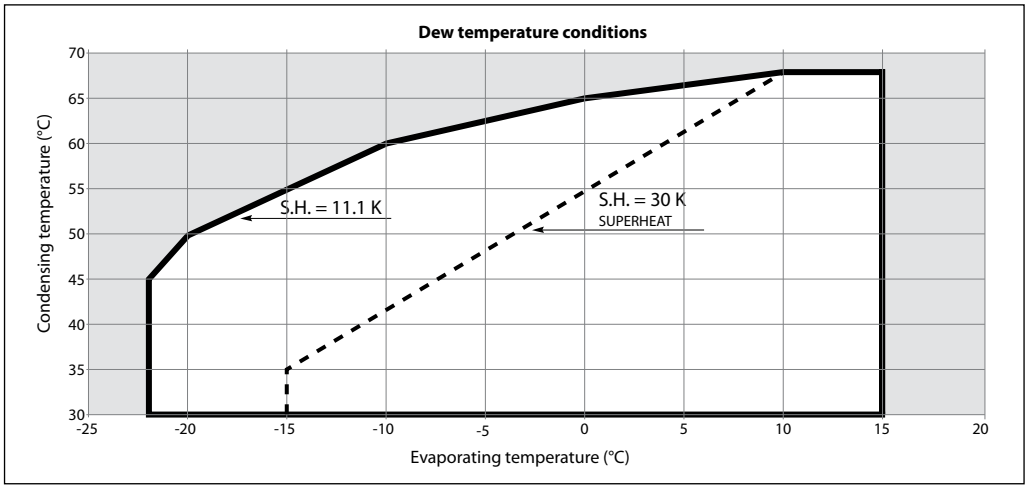

3.2 Application envelope

Performer® Scroll Compressor Series "SZ" Application Envelope R134a

SZ084 to SZ185

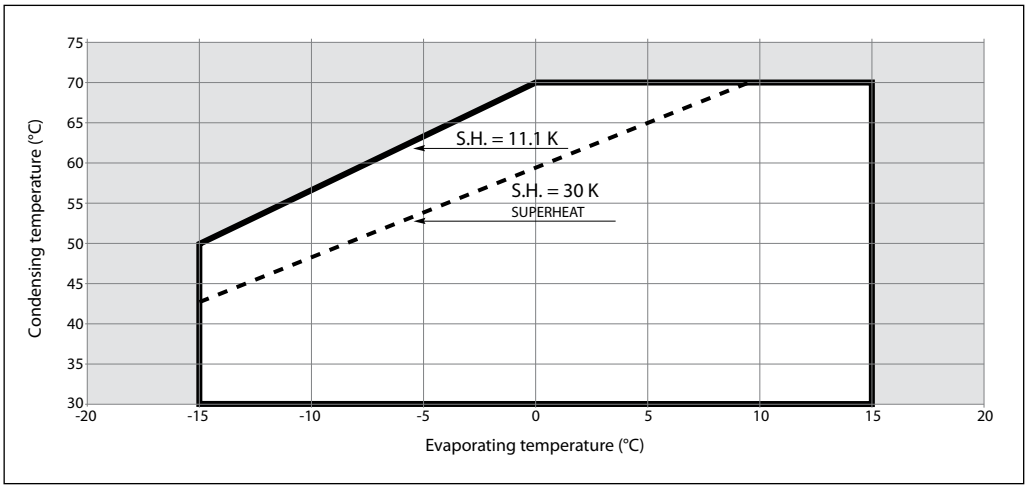

SZ240 to SZ380

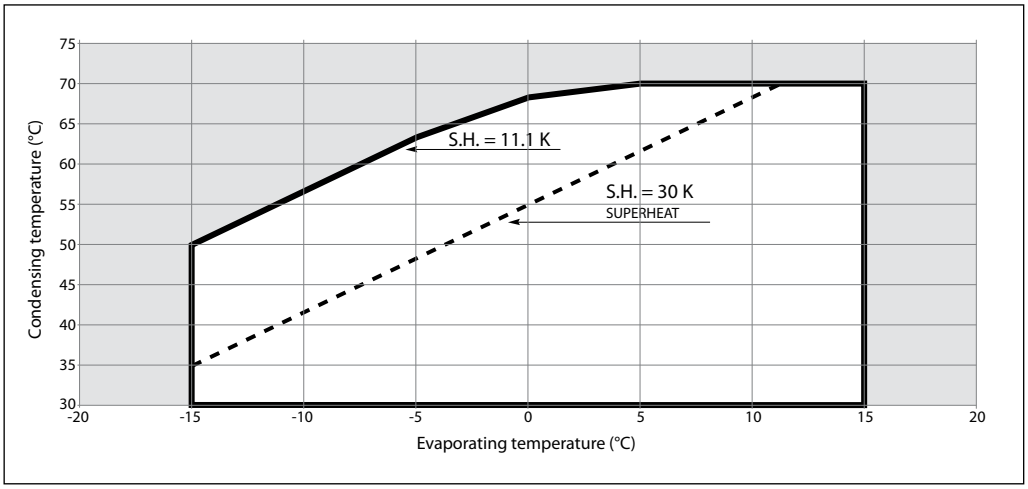

Performer® Scroll Compressor Series "SZ" Application Envelope R404A and R507

SZ084 to SZ185

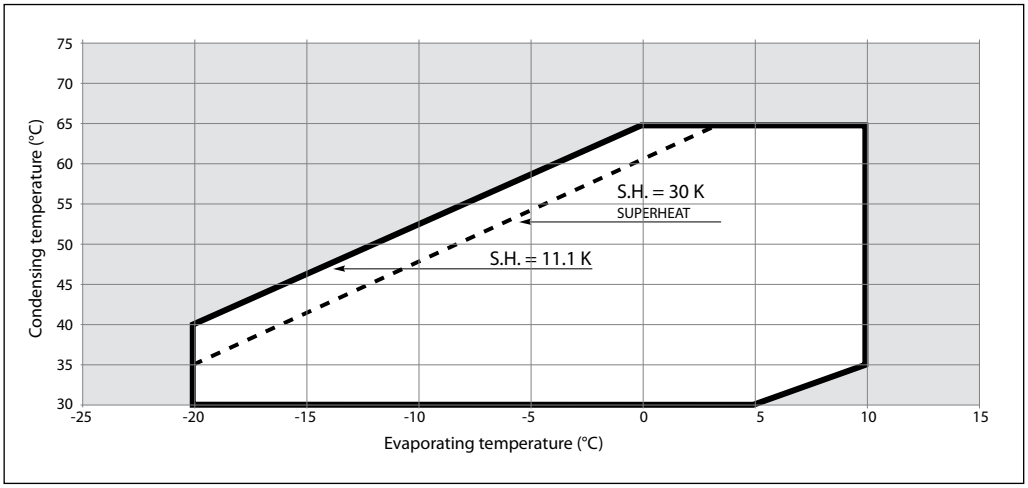

3.2 Application envelope

Performer® Scroll Compressor Series "SH" Application Envelope R410A

SH084 to SH380

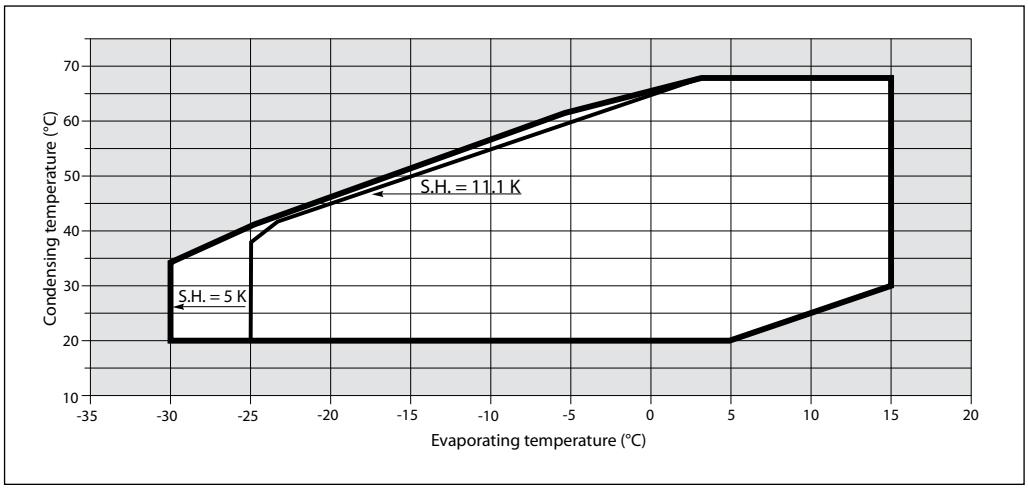

Performer® Scroll Compressor Series "H" Application Envelope

R410A – U design optimized for 7.2°C / 37.8°C

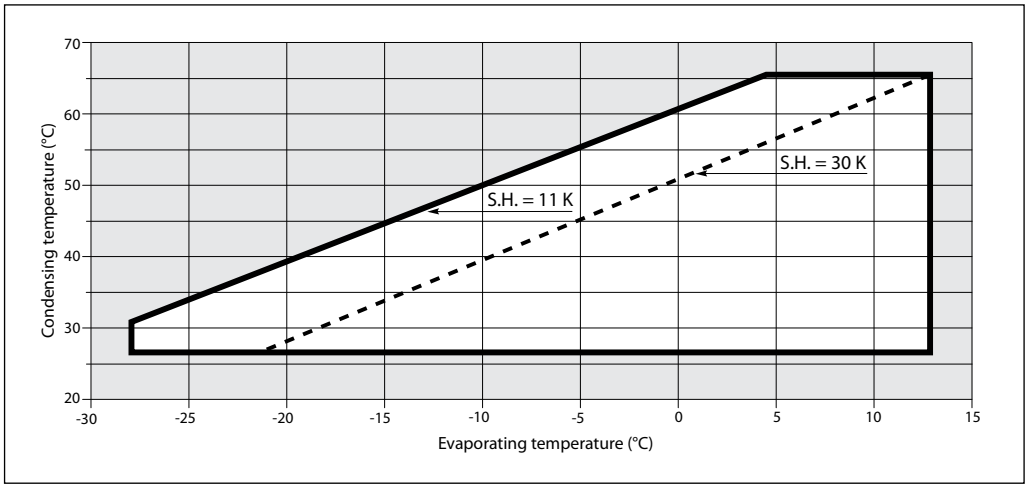

R410A/R407C – T design optimized for 7.2°C / 54.4°C

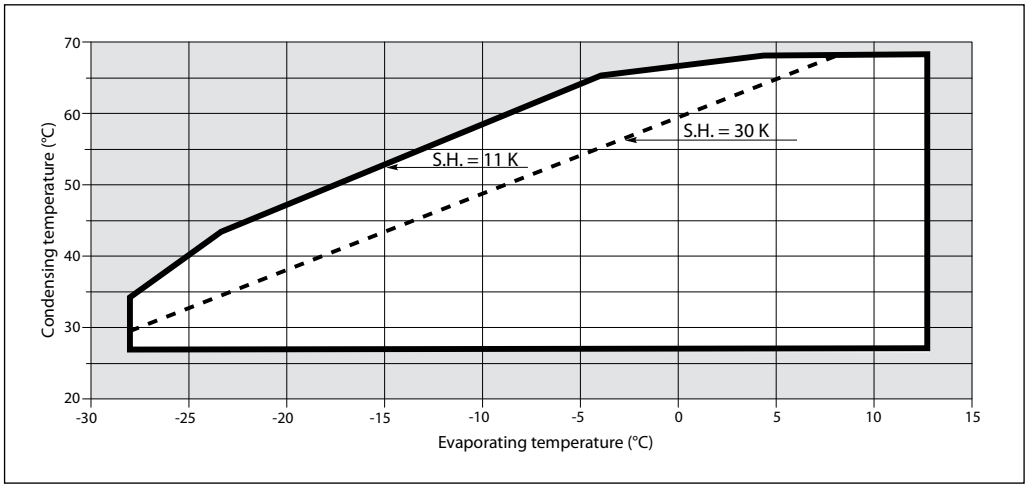

3.2 Application envelope

Performer® Scroll Compressor Series MLZ

Application Envelope R404/R 507-MBP

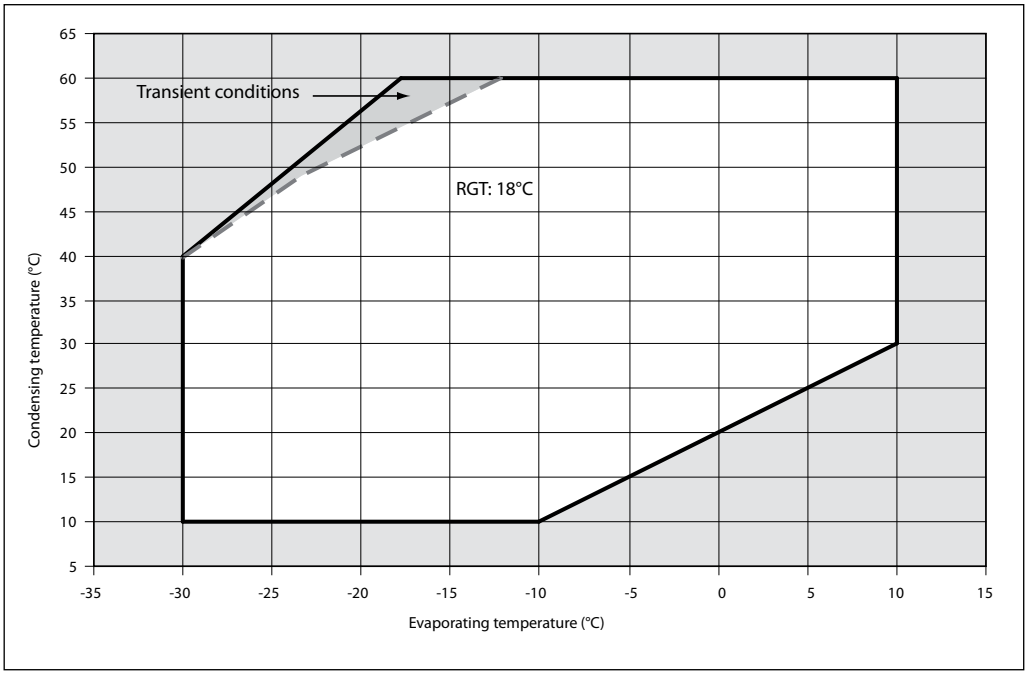

Application Envelope R134a-MBP

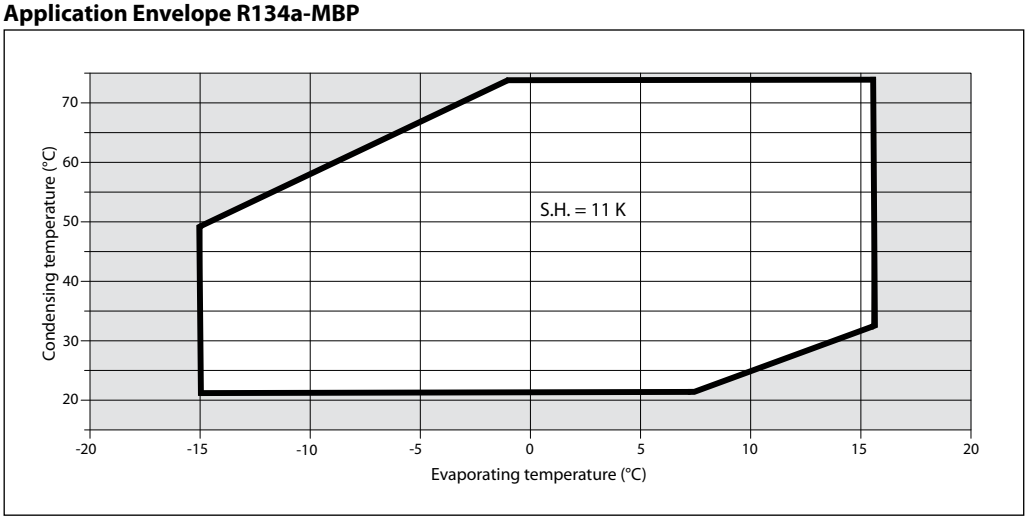

3.2 Application envelope

Performer® Heat Pump Scroll Compressor HHP

Application Envelope, R407C

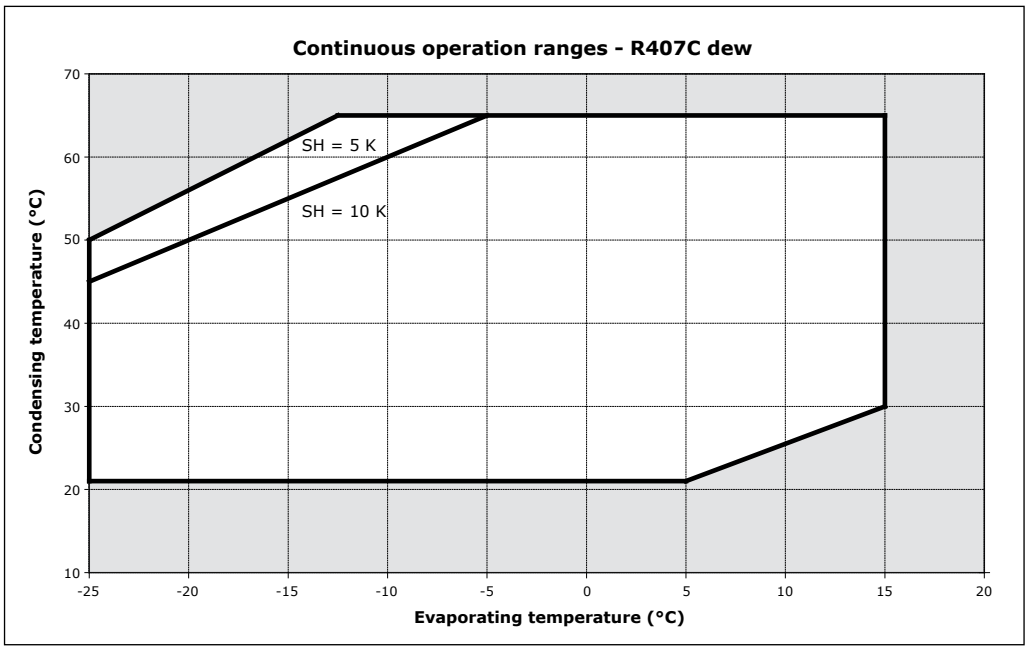

3.3 Application Guidelines

Performer® Scroll Compressors

Compressor Handling

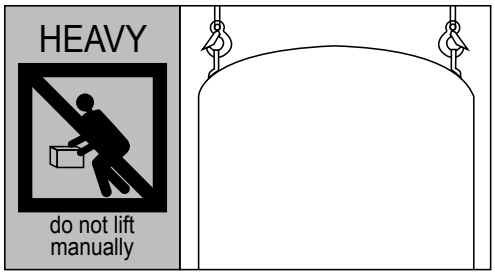

- Each Performer compressor is equipped with two lift rings on the top shell. A spreader bar rated for the mass of the compressor is highly recommended to ensure a better load distribution.
- Maintain the compressor in an upright position during all handling manoeuvres (maximum 15° from vertical).
- Never use only one lifting ring to lift the compressor.
- When the compressor is mounted as part of an installation, never use the lift rings on the compressor to lift the installation.
- Never apply force to the thermal box with intention of moving the compressor.

Charging the system

- Keep the compressor switched off. Charge the refrigerant in liquid phase into the condenser or liquid receiver. The charge must be as close as possible to the nominal system charge to avoid low pressure operation and excessive superheat. Never let the pressure on LP side exceed the pressure on HP side with more than 5bar. Such pressure difference could cause internal compressor damage.
- Keep the refrigerant charge below the indicated charge limits if possible. Above this limit; protect the compressor against liquid floodback with a pump-down cycle, suction line accumulator and a liquid receiver.
- Never leave the filling cylinder connected to the circuit.

System Cleanliness
Vacuum Pump down and Moisture Removal

- The use of highly-hydroscopic polyester oil in compressors requires that the oil should be exposed to the atmosphere as little as possible.
- The required moisture level in the circuit after vacuum dehydration must be <100 ppm.
- Never use the compressors to evacuate the system.
- Connect a vacuum pump to both the LP&HP sides.
- Evacuate the system to a pressure of 500 µ, HG (0.67 mbar) absolute.

Liquid return

- If the evaporator lies above the compressor, as is often the case in split or remote condenser systems, the addition of pump-down cycle is strongly recommended.
- If a pump-down cycle were to be omitted, the suction line must have a loop at the evaporator outlet to prevent refrigerant from draining into the compressors during off-cycles.

3.3 Application Guidelines

Oil Return

- If the evaporator is situated below the compressor, the suction riser must be trapped so as to prevent liquid refrigerant from collecting at the outlet of the evaporator while the system is idle, which would mislead the expansion valve's sensor (thermal bulb) at start-up.
- When the condenser is mounted at higher position then compressor, a suitably size "U"–shaped trap close to the compressor is necessary to prevent oil leaving the compressor from draining back to the discharge side of the compressor during off cycle. The upper loop also helps avoid condensed liquid refrigerant from draining back to the compressor when stop.
- If the evaporator is situated below the compressor, the suction riser must be trapped so as to prevent liquid refrigerant from collecting at the outlet of the evaporator while the system is idle, which would mislead the expansion valve's sensor (thermal bulb) at start-up.

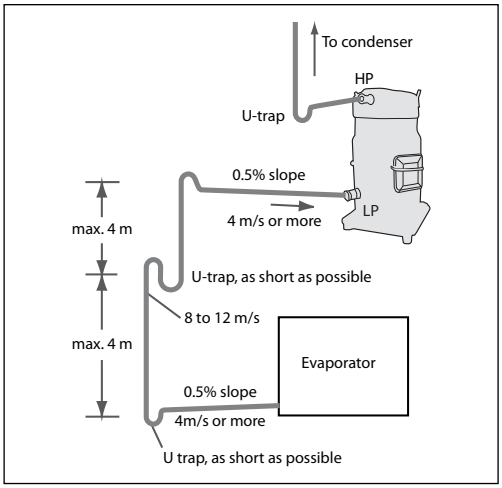

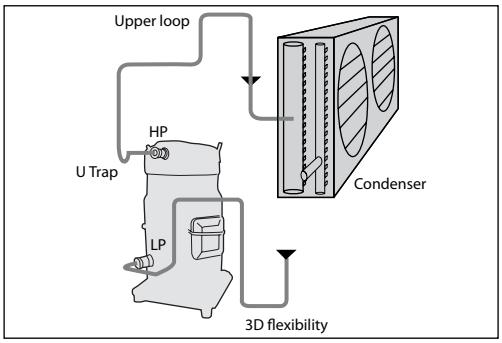

Cycle Rate Limits

- Danfoss recommends a restart delay timer to limit compressor cycling.
- The system must be designed in a way that guarantees a minimum compressor running time of 2 minutes so as to provide for sufficient motor cooling after start-up along with proper oil return. Note that oil return may vary since it depends upon system design.
- There must be no more that 12 starts per hour (6 when a resistor soft-start accessory is introduced); a number higher then 12 reduces the service life of the motor-compressor unit. If necessary, place an anti-short-cycle timer in the control circuit, connected as shown in the wiring diagram section.
- A three-minute (180-sec) time out is recommended.

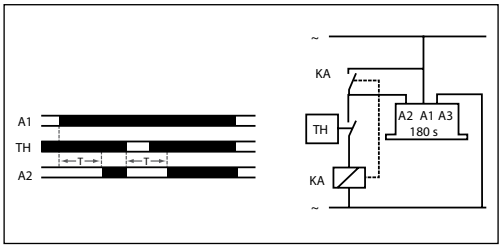

Operating Voltage Range

- The compressors are available in different motor voltages, depending on the type.
- Before start up check if the actual voltage is inside the voltage tolerances shown in the tables below.
- Check also voltage balance inside tolerances.

Performer "S" series

		Motor voltage code 3	Motor voltage code 4	Motor voltage code 6	Motor voltage code 7	Motor voltage code 9
Nominal voltage	50 Hz	-	380-400 V - 3 ph	230 V - 3 ph	500 V - 3 ph	-
Voltage range	50 Hz	-	340-440 V	207 - 253 V	450 - 550 V	-
Nominal voltage	60 Hz	200-230 V - 3 ph	460 V - 3 ph	-	575 V - 3 ph	380 V - 3 ph
Voltage range	60 Hz	180 - 253 V	414 - 506 V	-	517 - 632 V	342 - 418 V

3.3 Application Guidelines

Performer "H" series and MLM / MLZ

		Motor voltage code 1	Motor voltage code 2	Motor voltage code 4	Motor voltage code 5	Motor voltage code 7	Motor voltage code 9
Nominal voltage	50 Hz	-	200-220 V - 3 ph	380-400 V - 3 ph	200-240 V - 1 ph	500 V - 3 ph	-
Voltage range	50 Hz	-	180-242 V	340-460 V	198-264 V	450-550 V	-
Nominal voltage	60 Hz	208-230 V - 1 ph	208-230 V - 3 ph	460 V - 3 ph	-	575 V - 3 ph	380 V - 3 ph
Voltage range	60 Hz	187-253 V	187-253 V	414-506 V	-	517-632 V	342-418 V

- Proper voltage to the unit should be verified.
  1) Voltage Range
     The operating voltage must be limited within rated voltage +/-10%.
  2) Voltage Balance
     The safe voltage unbalance limits is 1%, and must not exceed 2% from the mean voltage.
     Voltage unbalance is given by the formula:

$$\text{\% voltage unbalance} = \frac{|V_{avg} - V_{1\text{-}2}| + |V_{avg} - V_{1\text{-}3}| + |V_{avg} - V_{2\text{-}3}|}{|2 \times V_{avg}} \times 100$$

V_{avg} = Mean voltage of phases 1, 2, 3.
$V_{1\text{-}2}$ = Voltage between phases 1 & 2.
$V_{1\text{-}3}$ = Voltage between phases 1 & 3.
$V_{2\text{-}3}$ = Voltage between phases 2 & 3.

4.0 Trouble Shooting

System Cleanliness

System contamination is one of the main factors affecting equipment reliability and compressor service life. During the manufacturing process, system contamination can be caused by:

- Brazing and welding oxides.
- Filings and particles from removing burrs from pipe-work
- Brazing flux
- Moisture and air

- The presence of non-condensable substances and system contaminates, such as metal shaving, solder and flux, have a negative impact on compressor service life. Many of these contaminants are small enough to pass through a mesh screen and can cause considerable damage within a bearing assembly. Besides, impurities can cause chemical reactions.

Refrigerant Charging

- To avoid system overcharge → operate system with minimum refrigerant charge, especially for large system or system with long pipe distances.
- Too small refrigerant charge can decrease system COP.
- Refrigerant charge limit can be found in *Danfoss application guideline*, if the amount of refrigerant charge in the plant is above the charging limit, a refrigerant migration test is required.

Vacuum Pumping and Moisture Removal

- Moisture obstructs the proper functioning of the compressors and the refrigeration system. Air and moisture reduce service life, increase condensing pressure and cause excessively high discharge temperatures which can destroy the lubricating properties of the oil.
- Air and moisterure also increases the risk of acid formation, giving rise to copper plating.
- All these phenomena can cause mechanical and electrical compressors failure.
- To eliminate these factors, *a vacuum evacuation* is required (see Selection & Application Guidelines for more details).

Liquid Flood Back

- During operation, refrigerant enters the compressor as a superheated vapor. Liquid flood back occurs when parts of the refrigerant entering the compressor is still in liquid state.
- Performer scroll compressors can tolerate occasional liquid flood back. However system design must avoid that repeated and excessive flood back.
- A continuous liquid flood back will cause oil dilution and, in extreme situations lead to lack of lubrication and high rate of the oil leaving the compressor.
- Liquid flood back could also cause liquid slugging resulting in compressor failure.

Suction Line Accumulator

- A suction lineaccumulator can be used for protecting compressor against uncontrolled refrigerant flood back, at start up, during operation, defrosting and reverse cycle.
- Danfoss recommends to use suction line accumulators in reverse systems.
- It is recommended to size the accumulator for at least 50% of the total system charge. Check also min. and max. capacity of selected suction line accumulator.

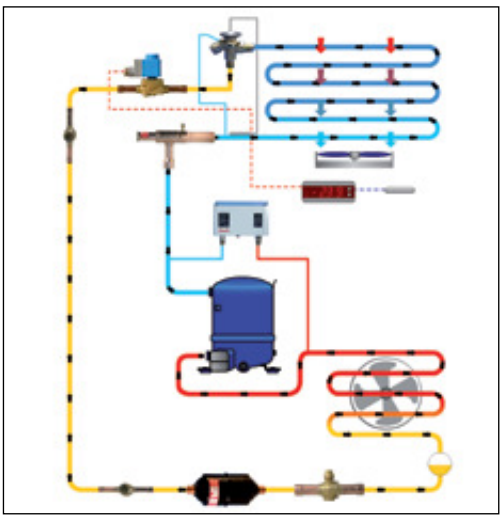

4.1
Why Compressors Fail

Flooded Start

- Flooded Start is an off cycle problem.
- This is the result of refrigerant migrates from the system back to compressor crankcase during off cycle.
- When the compressor starts, the refrigerant diluted in the oil is evaporated causing the crankcase to fill with refrigerant foam. This foaming cannot lubricate properly the bearings and result in an irreversible wear.
- *HOW?*
  Refrigerant will always move and condense in the coolest part of a refrigeration system.

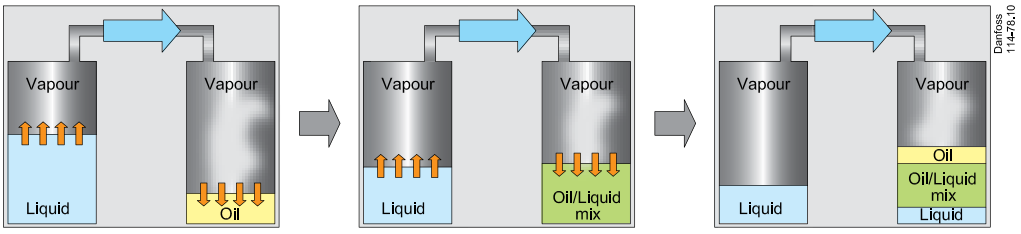

Starting to migrate | Oil diluted with liquid refrigerant | Layering

Refrigerant boils off | Rich foam in sight glass

- *RESULTS:*
  Orbiting scroll bearing is worn

  Or/And

  Upper main bearing seized (with material transferred onto crankshaft surface)

  Or/And

  Motor burnt out

4.1
Why Compressors Fail
(continued)

How can you prevent this problem?

- Site the compressor in a warmer ambient area
- Avoid system overcharge. Operate system with minimum refrigerant charge, especially for large system or system with long refrigerant line.

  Refrigerant charge limit can be found in **Danfoss application guideline** (see also Fitters Notes, chapter 3.5), if real amount of refrigerant charge is above the charging limit, then the refrigerant migration test is required.
- Use a continuous pump down to keep refrigerant out of the compressor. A liquid line solenoid valve is used to isolate there refrigerant.
- Use crankcase heater, and ensure its effectiveness.

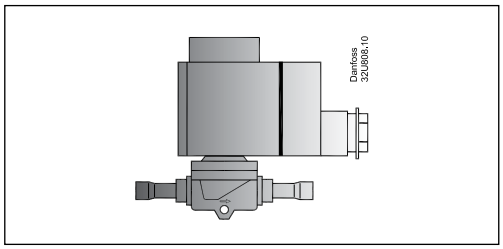

Important:

1. Crankcase heater effectiveness checking. The oil temperature in sump must be at least 10K higher than the saturation temperature of the refrigerant on low pressure side under all ambient conditions.
2. The heater must be energized before initial start-up. Minimum 6 hours pre-heating is recommended for surface sump heater, and 8 hours for belt-type heater.

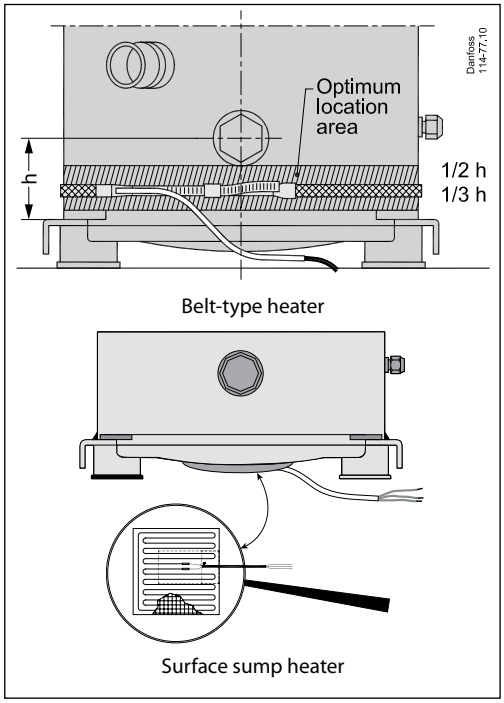

4.1
Why Compressors Fail
(continued)

Refrigerant Liquid Flood Back

- Refrigerant Liquid Flood Back is a running cycle problem.
- This is the result of repetitive and excessive returns of liquid refrigerant to the compressor when it is running.
- The oil is diluted with refrigerant, and the mixture cannot lubricate properly the bearings. All bearings work in bad lubrication conditions and result in an irreversible wear.

HOW?

- Refrigerant flood back can happen in any system. And can be caused by many reasons:
  - Low evaporator loads
  - Liquid flood back very often occurs during LOW LOAD conditions (night, …)
  - Bad efficiency of heat exchanger (faulty evaporator fans/oil in evaporator)
  - Poor defrost settings/functions
  - Expansion valve oversize
  - Expansion valve superheat control unstable
  - Superheat setting too low

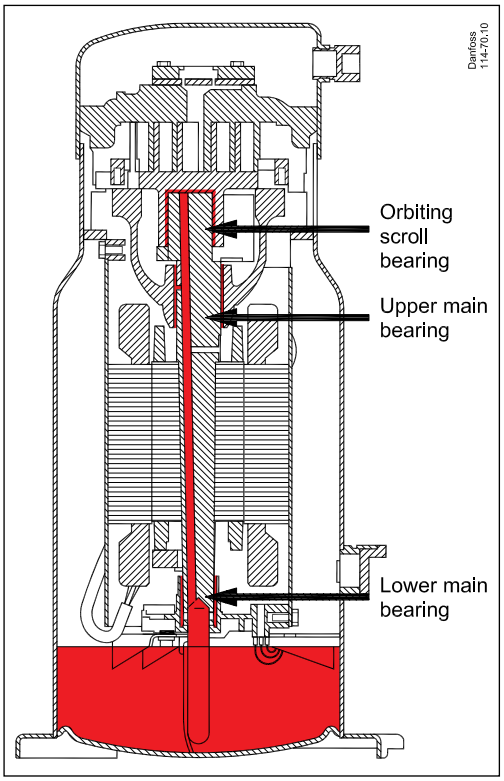

Oil Circulation

- *RESULTS:*
  For a scroll compressor the progressive wear normally happens on each bearing because of no adequate lubrication.

  This fail is more serious on upper main bearing where is the biggest working load location.

  As the consequence, compressor's motor can be burnt out.

4.1
Why Compressors Fail
(continued)

Superheat measurement is very IMPORTANT !

Flood back can be identified by measuring superheat of compressor inlet.

Super heat is the heat added to the saturated suction temperature.

Saturated suction temperature can be obtained by converting the suction pressure to a temperature via a pressure temperature chart.

$SH[K] = t_1[°C] - t_s[°C]$

Superheat must be set for minimum 6-8 Degree K (Thermostatic Expansion Valves), and can be 4-6 Degree K if electronic expansion valves used.

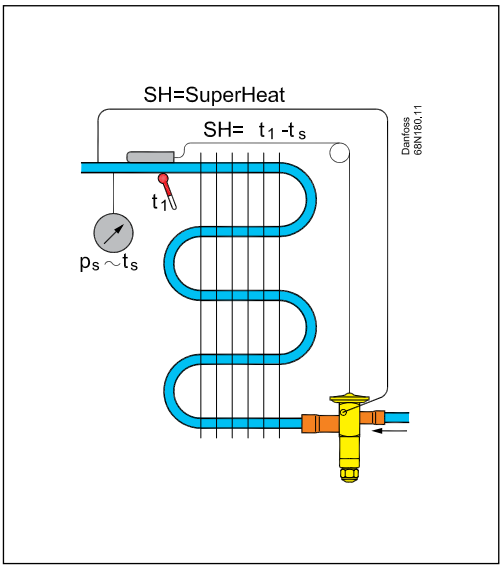

How can you prevent uncontrolled liquid flood back?
A suction line accumulator can be used for protecting compressor against uncontrolled refrigerant flood back, at start up, during operation, defrosting and reverse cycle.

The accumulator size should MORE THAN 50% of the total system charge.

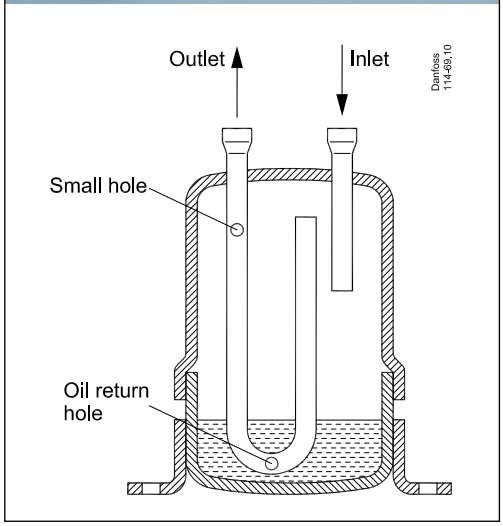

4.1
Why Compressors Fail
(continued)

Refrigerant Liquid Slugging

- Refrigerant Liquid Slugging is a result of excessive liquid refrigerant presence, or oil, or mixture, in the compression sets.
- Trying to compress liquid causes abnormal hydraulic forces and irreversible mechanical damage. Refrigerant liquid slugging usually occurs at start-up in flooded conditions on all unit types, or after defrost on reversible heat pump applications.

HOW?

- Refrigerant liquid slugging usually occurs at start-up in flooded conditions (too large refrigerant charge, refrigerant migration). On reversible heat pump system, it may occur after defrost cycle.
- A refrigerant liquid slugging is where extrem-eflooded start or liquid flood back occur.
- Danfoss scroll compressor has gas intake design, it has good resistance to liquid slug-ging. A slugging is the quantity of liquid enter the compressor is large enough to overcome compressor'liquid handling ability.

Compression Sets
Refrigerant liquid, or oil, or mixture, might enter suction pocket at extreme flooded start or/and flood back conditions.

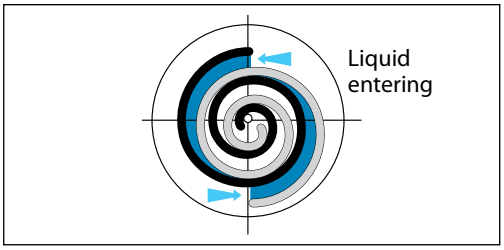

- *RESULTS:*
  Trying to compress liquid, compressor scroll is going to break (normally it is broken on suction side), and Oldham coupling can be damaged too.

  As consequence, the motor stator may be burnt out.

4.1
Why Compressors Fail
(continued)

How can you prevent this problem?

- See relevant preventive recommendation of flooded starts and refrigerant liquid flood back for correcting the problem of liquid slugging. Such as:
  - Maintain proper suction superheat;
  - Correct abnormally low load conditionst;
  - Site the compressor in a warm ambient area;
  - Avoid overcharge of refrigerant;
  - Use suction accumulator and crankcase heater to stop uncontrolled refrigerant migration, etc.

4.1
Why Compressors Fail
(continued)

Loss of Oil

- Loss of Oil is a result insufficient lubricant quantity in the sump for properly lubricate the load bearing surfaces.
- This happens when there is not enough oil which returns to the compressor, a uniform wearing of all load bearings will result.

HOW?
Some of the system problems that cause loss of oil are:

- Compressor short cycling
- Oil traps in the pipe work for incorrect piping design (improper pipe sizing, velocity, risers, improper traps …)
- Loss of charge (Circuit leakage)
- Low load/part load operation during long period of time
- Insufficient oil charge in the system, especial for long pipe system
- Oil trapped in system (accumulator oil return hole blocked, filter blocked…)

Oil Sight Glass
Oil level must be visible in sight glass when the compressor is running under stabilized conditions.

It's critical if oil in sump lower than 25% of nominal oil quantity.

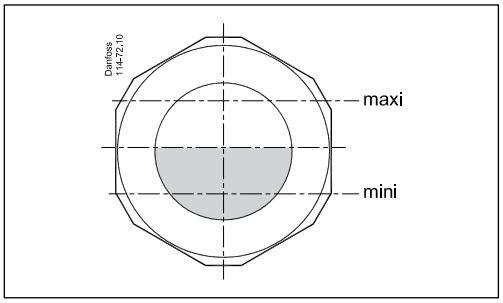

- *RESULTS:*
  In lack of lubrication condition, there is not sufficient oil to lubricate and cool the bearing surface.

  The bearing surface are scored and discolored, some carbon deposits on bearing, which is due to the bearing running hot.

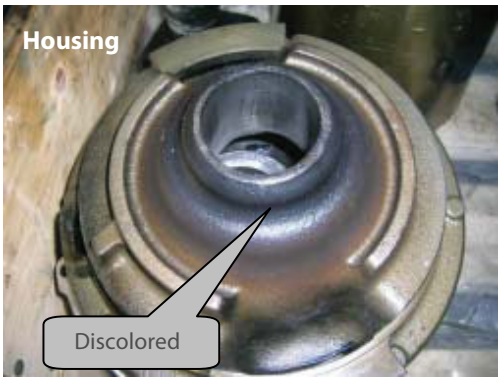

4.1
Why Compressors Fail
(continued)

How can you prevent this problem?
Preventive measures required to prevent oil loss.

- Check oil level under all conditions, and make sure oil level must be visible in sight glass. The oil level can also be checked a few minutes after the compressor stops.
- For long pipe line application, if installation lines exceed 20 m, additional oil may be needed.
- Oil charge has to be evaluated and adjusted based on the oil level in the compressor sight glass.
- And 1 or 2% the total system refrigerant charge (in weight) can be used to roughly define the required oil.
- For a circuit which loss of charge/leakage, the oil level must be checked and add some oil in system if large loss of oil out of compressor.
- Avoid abnormal short cycling.Minimum compressor running time of 2 minutes to ensure oil return.
- Check for inadequate defrosts.Inadequate defrosts might allow ice or frost to build up on coil, it will result in low load condition and cause oil trapped in coil.

Compressor Series	Oil type
SM	Mineral oil 160P
SY	P.O.E. 320 SZ
SZ	P.O.E. 160 SZ

How can you prevent this problem?
- Check pipe work design.
- Use oil separator on the system which it is difficult for oil to return from evaporator.
- If the evaporator is situated below the compressor, the recommendations for vertical risers as below:To ensure proper oil return a gas velocity of 8-12m/s is required. If the riser is higher than 4m additional U-traps are required.

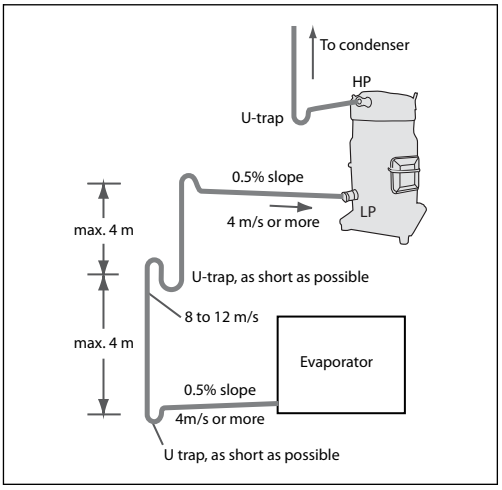

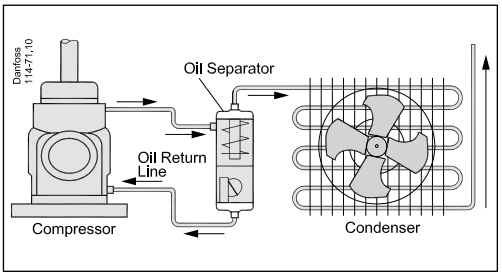

4.1
Why Compressors Fail
(continued)

High Discharge Temperature

- High Discharge Temperature is a result of compressor operation out of the application operating envelope.

- This will lead to big contact efforts on the top of spiral and flanks of scroll involute, due to thermal dilatation phenomena. As the temperature increases, the oil will lose its ability to lubricate bearings properly. The other consequence is the motor stator might be burnt out.

HOW ?
The typical causes of overheating might be:

- System operating out of compressor safety envelop, too low suction pressure, or too high discharge pressure, or too high compression ratios, or too high suction superheat, etc.
- Presence of air or other non condensable gas in system.
- Bad efficiency of condenser, such as inadequate airflow through the condenser, or condenser fan faulty, or inadequate air circulation clearance around unit, etc.
- Less refrigerant gas flow back to compressor, might be caused refrigerant under charge, or system leak, or valve not opened, etc.

In most of time, this problem is combined with lack of external overheat protection of system, or overheat protection doesn't function !

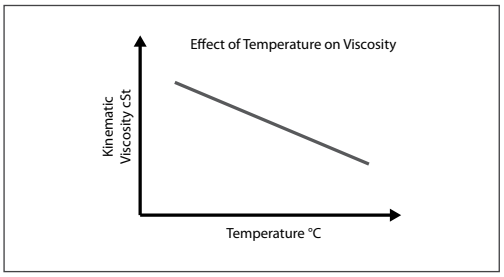

High Temperatures determine a loss of lubricant viscosity.

Oil lubricity is weakening at 148°C-160°C, and will start to break down at 176°C.

The safe discharge gas temperature is 135°C.

Melted tip seal; scored scroll spiral

Carbonized valves and valve plates

Burnt or discolored upper shell

Scored upper main bearing

RESULTS:

- Melted tip seal; scored scroll spiral
- Carbonized valves and valve plates
- Burnt or discolored upper shell
- Scored upper main bearing

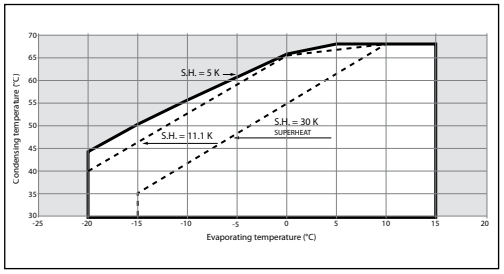

How can you prevent this problem?

- Evaluate system design, to ensure correct super heat setting, condenser size, refrigerant charge, etc.

- The reliable operations of the compressor must be limited in application envelope. Only under transient conditions, such as start-up, or defrost, the compressor may operate outside the envelope for short periods.Maximum suction superheat is 30K.

- Insulate suction lines if necessary.

4.1
Why Compressors Fail
(continued)

How can you prevent this problem?

- System refrigerant charge and leakage checking.

- If there are bubbles in the sight glass, it indicate that the refrigerant in system might be low, insufficient refrigerant cannot provide proper compressor cooling/motor cooling. Bubbles that occur when the system first starts may be normal, and do not indicate low charge.

- Efficiency of condensing checking.

No air circulation clearance at airflow outlet

Choked Condenser

- Correct setting external discharge gas temperature protection.

- Discharge gas temperature protection (DGT) is required if the high and low pressure switch settings do not protect the compressor against operations beyond its application envelope. Heat pump systems must install DGT.

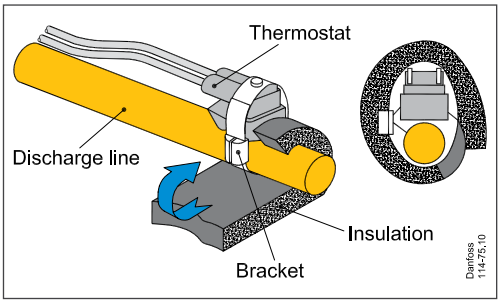

- DGT must be attached to discharge line within 150 mm from the compressor discharge port, and must be thermally insulated.The recommended setting point: 135°C MAX. gas temperature/125°C MAX. pipe surface temperature

4.1
Why Compressors Fail
(continued)

High Pressure Ratio

- High Pressure Ratio is the problem due to compressor operation out of the application operating envelope.

- This led to heavy contact efforts on the top of spiral or/and flanks of scroll involute in discharge side area, due to a large difference of pressure applied on the fixed scroll set.

HOW?
High pressure ratio can be caused by either low suction pressure, high head pressure, or a combination of the both.

- The compression ratio rises will cause the compressor's discharge temperature correspondingly increases, so normally the failure of high pressure ratio is the same thing with high discharge temperature, that can lead to the failure of internal components due to excessive thermal expansion and lubrication degradation. But some extreme high pressure ratio conditions may result in different failure patterns of scroll due to the mechanical stresses in scroll sets.

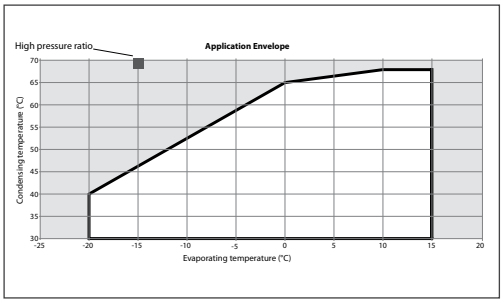

In most of time, this problem is combined with lack of LP/HP protection, related protection doesn't function, or wrong setting points !

RESULTS:

- High pressure ratio conditions might lead to big contact effort on top of spiral and flanks of scroll involute. The spiral bottom and tip area will be scored in discharge side, or scroll spiral broken. Other consequence can be discharge valve and its seat wear (or broken).

Pressure Difference

- High pressure difference applied on the fixed scroll set.

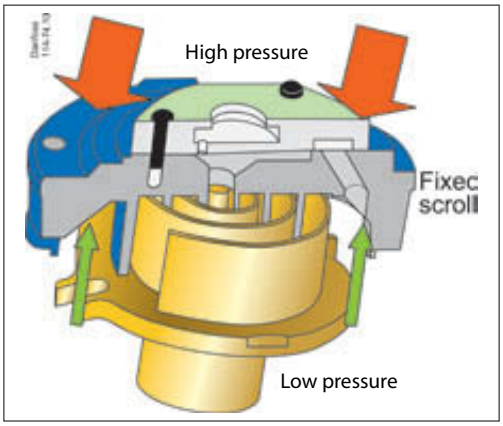

4.1
Why Compressors Fail
(continued)

How can you prevent this problem?

- For preventing the problem of high pressure ration install LP/HP switch in system, and ensure correct setting point.
-
- LP safety switch shall never be bypassed and shall have no time delay, its mounting position should be close to compressor suction fitting.

- Other system checking can be:
  - Check the compressor's operating conditions.
  - Check the angle valves in suction line/ liquid line on open status, before start up compressor.
  - A specific compressor start sequence control has to be set when an electronic expansion valve (EEV) is used.

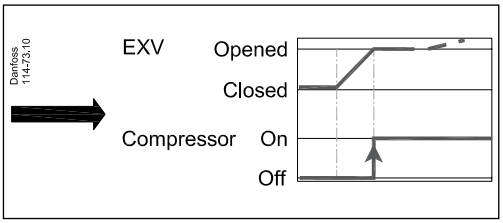

	R410A bar (g)	R22 bar (g)	R407C bar (g)	R134a bar (g)
Working pressure range high side	13.5-44.5	10.9-27.7	10.5-29.1	6.7-20.1
Working pressure range low side	2.3-11.6	1.4-6.9	1.1-6.4	0.6-3.9
Maximum high pressure safety switch setting	45	28	29.5	20.51.5
Minimum low pressure safety switch setting	1.5	0.5	0.5	0.5
Minimum low pressure pump-down switch setting	2.3	1.3	1.0	0.5

4.1
Why Compressors Fail
(continued)

Contamination by Water, Moisture

- Contamination is the result of foreign materials presence in the circuit.
- System contamination is one of the main factors that effects equipment reliability and compressor service life, it can cause a series of mechanical or electrical damage of compressors.
- The foreign materials might be:
  - Water (Visible)
  - High moisture (Invisible)
  - Or other incompatible materials

HOW?
The system can be contaminated due to the abnormal system leakage, for example heat exchanger leak causes water come into circuit.

In addition, the foreign substance can be also inducted in circuit during any of unit assembly process, or system maintaining/repairing process in job site, etc. It is the result of cleanness or its control weakness, such as:

- Improper vacuuming of system
- Contaminated system components
- Contaminated refrigerant and / or oil
- Contamination due to brazing, etc

RESULTS:

- Water contamination
- Bearing seized as the oil film is destroyed by water
- Inner surface of oil hole is plated by rust
- Mechanical parts and shell are rusty

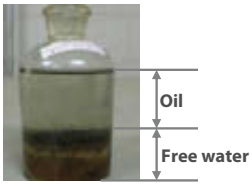

Free water in oil
(Evaporator leak)

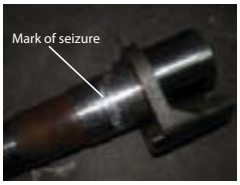

Bearing seized as oil film destroyed by water

Inner surface of oil hole is plated by rust

Mechanical parts and shell are rusty

Oil Film Formation

- The film of oil keep crankshaft and bearing bushing separated.
- The oil film formation will be destroyed if water enter the clearance, then cause bearing fail.

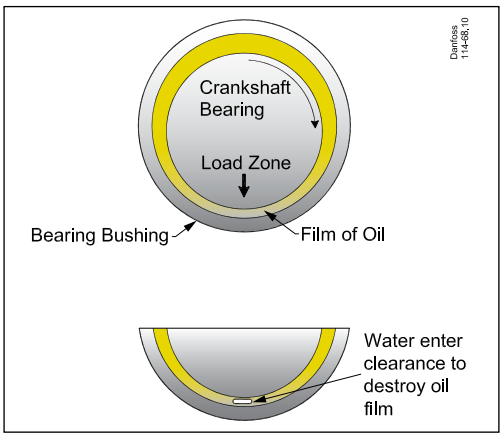

4.1
Why Compressors Fail
(continued)

Moisture Contamination

- Moisture increases acid level in system, the water-formed acid attack motor stator and cause it spot burnt.

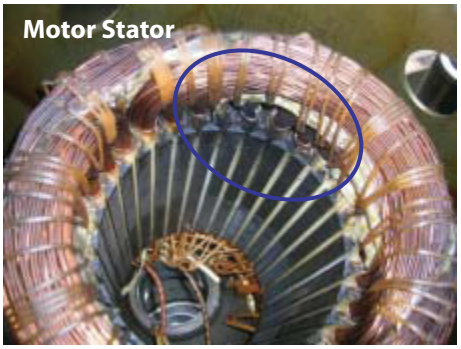

- The copper plating very often take place on bearing or scroll surface.

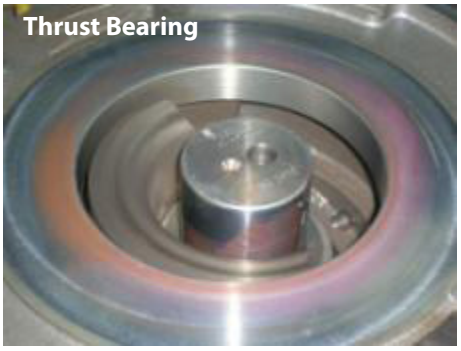

RESULTS:

Risk of Moisture

- Ice crystals formation in expansion device. If liquid line dryer of system is adequate, moisture can be well collected, the ice formation might not be a problem.

- Acid formation. This is the main risk of high moisture content in system.

Oil + Moisture + High temp. = Organic Acid

Refrigerant + Moisture + High temp. = Hydrofluoric Acid or Hydrocloric Acid

4.1
Why Compressors Fail
(continued)

Incompatible Substance Contamination

Failure Mode

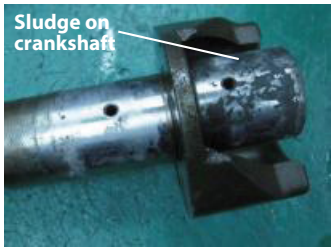

Case 1

Case 2

- Case 1:
  Chloromethane (CH3CL) mixed with R22.
- Case 2:
  Impure R22 mixed with unknown corrosive substance.

The incompatible substance is harmful for compressor service life, as the corrosive substance attacks the components and materials.

4.1
Why Compressors Fail
(continued)

Contamination

How can you ensure system cleanness?

- Check vacuum procedures
  - Suggest to connect the vacuum pump to both the LP and HP side;
  - Evacuate the system to a pressure of 500 µm Hg (0.67 mbar) absolute.

- Filter drier
  - Selection of the drier should take into account its drying capacity (water content capacity), the system refrigeration capacity and the system refrigerant charge.
  - Never re-use an used filter drier. It will give off moisture in a low moisture content system, or if it becomes heated.

- Moisture indicator
  - Sight glass is mostly installed in liquid line between filter and expansion valve to monitor the condition of refrigerant.
  - The sight glass type equipped with moisture indicator can give you early indication of moisture content in the system, before the effects of acid formation can attack and damage the motor windings.

  The moisture indication is given by different colors:
  - Green: No dangerous moisture in the refrigerant.
  - Yellow: Moisture content in the whole refrigeration system is too high.

CAUTION:
Do not leave compressor or system open to atmosphere for longer than 10 minutes

How to clean refrigeration system after compressor fail?
When a compressor fails, the particles or sludge mix with oil and spread throughout the entire system. The contaminated oil, as well as contaminants and other corrosives must be removed to avoid repeated failure of replacement compressor.

- Flushing condenser, evaporator and pipe line of the system, with refrigerant or approved flushing chemical (such as R141b).

- Replace the filter drier.

- Replace the accumulator for avoiding cross-contamination, because some contaminated oil might remain in accumulator.

- Remove and change the contaminated oil or/ and other badly contaminated parts such as the condenser, valves, etc.

- If motor burnt, the burn-out filter is recommended for collecting/removing acid in system.

4.1
Why Compressors Fail
(continued)

Contamination

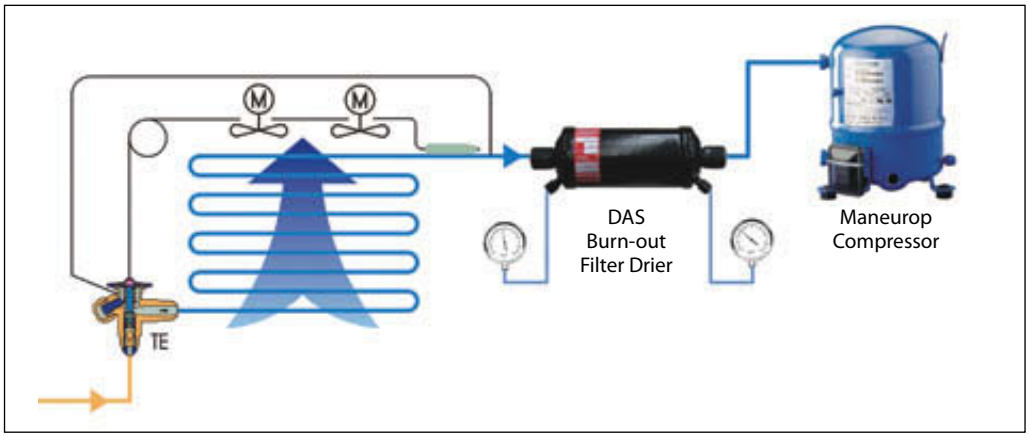

How to remove acid from system?
If the acid is present in circuit, for example acid is formed as a result of motor burnt-out, a burn-out filter is recommended to clean system. Refer to Danfoss instruction of DAS filter drier, the main procedures as below:

- Clean the entire system.
- Install a burn-out in the suction line.
- Check acid content regularly, as well as the pressure drop across the filter drier, and the burn-out filter is replaced if necessary (when pressure drop exceed limits).
- When oil check shows that the system no longer contains acid, the burn-out filter drier is removed and a new liquid line filter drier is installed in the liquid line.

4.1
Why Compressors Fail
(continued)

Electrical Failure

- Electrical Failure can be caused by a variety of conditions, the two main factors are mechanical and electrical issue.

- Many motor stator failure is a result of mechanical problems. Another most common electrical failure is due to improper electrical power supply, this leads to the overheating of the windings resulting in motor stator failure.

IDENTIFICATION

- **Motor stator is shorted due to winding attacked by foreign parts**
  Parts or small pieces enter stator can damage windings and bridge the gap of poles, it will result in winding spot burn.

  Possible Causes:
  - Liquid slugging (debris from broken scrolls)
  - Lubrication related failure (metallic particles from worn bearings)
  - Contamination
  - Other mechanical damage

Debris from broken scrolls come into stator, result in winding burn.

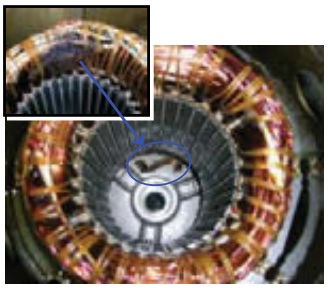

Foreign part come into stator, result in spot burn.

IDENTIFICATION

- **Motor stator is burnt due to rotor touch and rub on the stator**
  Rotor rub against stator lamination during starting or running condition, result in motor spot burn.

  Possible Causes:
  - Any of lubrication related failure (worn bearing with excessive bearing clearance)
  - Poor rotor/stator geometry

Rotor touch and rub on the stator with a resulting spot burn.

Rubbed rotor.

4.1
Why Compressors Fail
(continued)

Electrical Failure

IDENTIFICATION

- **Short circuit in the motor stator**
  A localised spot burn is often observed at the winding.

  - Winding shorted phase-to-phase ①
  - Winding shorted turn-to-turn ②
  - Grounded at stator slot outlet ③
  - Ground in stator slot ④
  - Shorted coil ⑤
  - Shorted connection ⑥

  Possible Causes:
  - Debris damage to motor insulation
  - Spikes of voltage or surges of current flow
  - Stator manufacturer defect

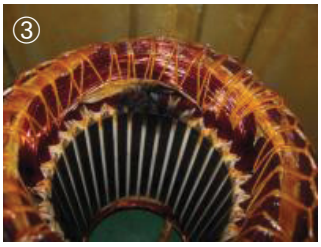

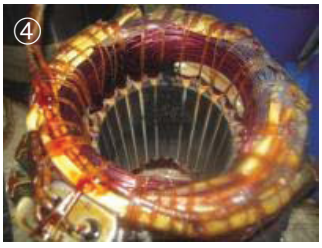

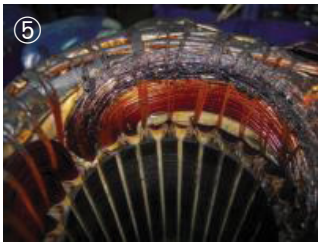

4.1
Why Compressors Fail
(continued)

Electrical Failure

- **General or uniform motor stator burn**
  All phases uniformly overheated or burned out, this is normally caused by high current in the stator windings or loss of compressor cooling.

  Possible Causes:
  - Locked rotor conditions
  - Improper voltage, too high or too low
  - Low suction pressure
  - Motor overload conditions
  - Short cycling condition

Even burn

Uniform overheated

- **Voltage Unbalance**
  Only one phase of a three phases motor is overheated and burn.

  Possible Causes:
  - Bad contacts/connections at motor terminals
  - Unbalanced voltage supply

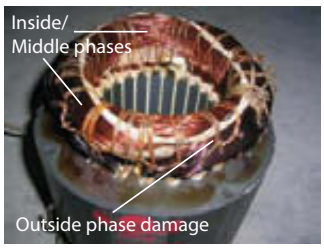

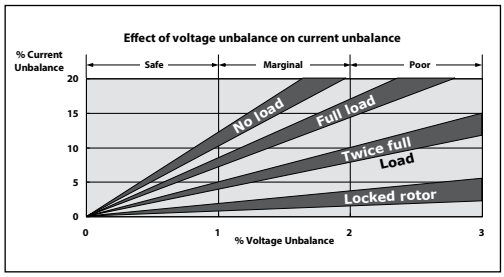

- **Single Phasing**
  "Y-connected"motor with two burned phases, one good. The type of failure is a result of an interruption in one power supply phase.

  Possible Causes:
  - Bad contacts in starters or sticky contactor
  - Improper electrical connections
  - Blown fuses

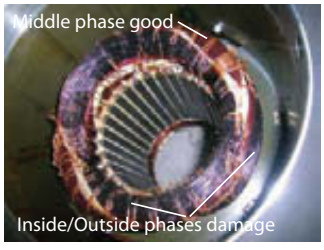

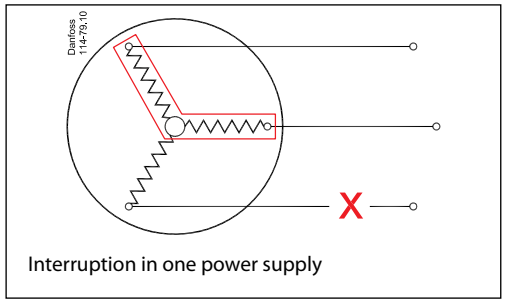

4.1
Why Compressors Fail
(continued)

Electrical Failure

How can you prevent this motor stator failure?

- Proper voltage to the unit should be verified
  - Voltage Range
    The operating voltage must be limited within rated voltage +/-10%.
  - Voltage Balance
    The safe voltage unbalance limits is 1%, and must not exceed 2% from the mean voltage. Voltage unbalance is given by the formula:

$$\%\ \text{voltage unbalance} = \frac{|\,Vavg - V1\text{-}2\,| + |\,Vavg - V1\text{-}3\,| + |\,Vavg - V2\text{-}3}{|2 \times Vavg} \times 100$$

Vavg = Mean voltage of phases 1, 2, 3.
V1-2 = Voltage between phases 1 & 2.
V1-3 = Voltage between phases 1 & 3.
V2-3 = Voltage between phases 2 & 3.

- Proper use external overload protection – check compressors Application Guidelines for correct protection dimensioning.

- Correct cycle condition
  There must be no more than 12 starts per hour.
- Other checking
  - Check contactor contacts and mechanical condition
  - Check terminal and wiring condition
  - Check for blown fuses
  - Oil analysis to determine moisture, metals, and acid content
  - Operating conditions including amperages, voltages, and system operating conditions