ENGINEERING
TOMORROW

Data sheet

Sight glass (High pressure)

Type SGP X, SGP I, SGP N, SGP RX, SGP RI and SGP RN

SGP are sight glasses for high pressure applications (Max. Working Pressure 52 bar / 754 psig).

SGP is available with flare, solder and socket connections, and with and without moisture indicators.

SGP I / SGP N and SGP RI / SGP RN are equipped with sensitive indicators that reflects a color, which depends on the moisture content in the refrigerant.

SGP X and SGP RX, without moisture indicator, are mainly used to indicate the condition of the refrigerant in the liquid line or the flow in the oil return line from the oil separator.

Features

Solder versions are compliant with ATEX hazard zone 2

Type SGP X / SGP RX (without indicator)
- Indicates lack of subcooling
- Indicates refrigerant deficiency
- Indicates liquid level in receiver
- Indicates oil level in compressor
- Flare/flare, solder/solder connection or socket type

Type SGP I / SGP RI (with I type indicator)
- For R22, R290, R600, R600a, R1234yf refrigerants
- Indicates too high moisture content in the refrigeration system
- Indicates lack of subcooling
- Indicates refrigerant deficiency
- Flare/flare, solder/solder connection or socket type

Type SGP N / SGP RN (with N type indicator)
- For R22, R32, R134a, R404A, R407C, R507, R410A, R1270, R407A, R407F, R448A, R449A, R450A, R452A, R452B, R454B, R513A, R1234ze, R744 (CO_2) refrigerants
- Indicates too high moisture content in the refrigeration system
- Indicates lack of subcooling
- Indicates refrigerant deficiency
- Flare/flare, solder/solder connection or socket type

Technical data

Media temperature:	-50 – 80 °C / -58 – 175 °F
Max. working pressure (PS / MWP):	52 bar / 754 psi
Refrigerant oil:	All mineral oils and ester oils

Approvals

Available types

Solder version ODF x ODF	**Flare External x External**	**Flare Internal x External**
SGP X without indicator	SGP X without indicator	SGP I and SGP N with indicator
Solder version ODF x ODM	**Solder version ODF x ODF**	**Flare External x External**
SGP I and SGP N with indicator	SGP I and SGP N with indicator	SGP I and SGP N with indicator
Socket	**Socket**	**Saddle**
SGP RX without indicator	SGP RI and SGP RN with indicator	SGS

Choice of sight glass moisture indication

Before choosing a sight glass with moisture indicator, the following should be considered:

- type of refrigerant
- water solubility of refrigerant
- the level on which a danger signal is required

Be aware that polyester oil for refrigerants like, e.g. R134a, R404A, R407C react with water in a hydrolysis generating acid and alcohol.

The recommended levels of moisture content are usually between 30 and 75 ppm, where hermetic compressors only tolerate very low moisture content, while semi-hermetic and other compressors normally tolerate higher moisture contents in the refrigerant.

The colour on the sight glass indicator depends on the moisture content of the refrigerant.

The values under "green / dry" are to be considered as perfect condition meaning full protection against harmful effects from moisture. In other words, the filter drier is working perfectly.

If the green color starts to fade, the color change has begun and the indicator should therefore be watched more carefully. If the color changes to yellow it is a clear signal, that the capacity of the filter drier is exceeded and must be replaced immediately.

Note: *When storing, transporting or installing the Sight Glass, avoid the chemical indicator to get in contact with non-refrigerant medium or fluid (like water, oil, ect.)*

REACH requirements

All Danfoss products fulfill the requirements in REACH.
One of the obligations in REACH is to inform customers about presence of Candidate list substances if any, we hereby inform you about one substance on the candidate list:
A moisture indicator in a sight glass contains a paper which is impregnated with Cobalt Dichloride (CAS no: 7646-79-9) in a concentration above 0.1% w/w. If the valve has been damaged or dismantled:

- Avoid skin contact with the paper
- Do not inhale the dust from the paper
- The paper must be disposed as hazardous waste

SGP I for R22, R290, R600, R600a and R1234yf

	Moisture content ppm = parts per million					
	SGP I / SGP RI					
	Media temperature 25 °C / 77 °F			Media temperature 43 °C / 109 °F		
	Green / dry	Intermed. color	Yellow / wet	Green / dry	Intermed. color	Yellow / wet
R22	< 150	150 – 300	> 300	< 250	250 – 500	> 500
R290	< 25	25 – 50	> 50	< 50	50 – 100	> 100
R600	< 10	10 – 20	> 20	< 28	28 – 55	> 55
R600a	< 11	11 – 22	> 22	< 30	30 – 60	> 60
R1234yf	< 93	93 – 130	> 130	< 130	130 – 247	> 247

SGP N for R22, R32, R134a, R404A, R407C, R507, R410A, R1270, R407A, R407F, R448A, R449A, R450A, R452A, R452B, R454B, R513A, R1234ze, R744 (CO_2)

	Moisture content ppm = parts per million					
	SGP N / SGP RN					
	Media temperature 25 °C / 77 °F			Media temperature 43 °C / 109 °F		
	Green / dry	Intermed. color	Yellow / wet	Green / dry	Intermed. color	Yellow / wet
R22	< 30	30 – 120	> 120	< 50	50 – 200	> 200
R32	< 64	64 – 289	> 289	< 116	116 – 459	> 459
R134a	< 30	30 – 100	> 100	< 45	45 – 170	> 170
R404A	< 20	20 – 70	> 70	< 25	25 – 100	> 100
R407C	< 30	30 – 140	> 140	< 60	60 – 225	> 225
R507	< 15	15 – 60	> 60	< 30	30 – 110	> 110
R410A	< 66	66 – 266	> 266	< 135	135 – 540	> 540
R1270	< 16	16 – 62	> 62	< 29	29 – 115	> 115
R407A	< 29	29 – 115	> 115	< 48	48 – 192	> 192
R407F	< 30	30 – 168	> 168	< 60	60 – 240	> 240
R448A	< 28	28 – 110	> 110	< 70	70 – 227	> 227
R449A	< 29	29 – 105	> 105	< 53	53 – 200	> 200
R450A	< 23	23 – 148	> 148	< 46	46 – 245	> 245
R452A	< 20	20 – 79	> 79	< 30	30 – 143	> 143
R452B	< 70	70 – 260	> 260	< 144	144 – 260	> 260
R454B	< 29	29 – 161	> 161	< 58	58 – 250	> 250
R513A	< 22	22 – 75	> 75	< 22	22 – 123	> 123
R1234ze	< 26	26 – 132	> 132	< 28	28 – 165	> 165

Notes:

- *For a fully updated list of approved refrigerants, visit **www.products.danfoss.com** and search for individual code numbers, where refrigerants are listed as part of product specifications.*
- *Only solder versions are allowed for flammable refrigerant.*
  This product is approved for R290, R600, R600a and R1270 by ignition source assessment in accordance to standard EN13463-1.

For colours reflecting moisture values of other refrigerants, please contact Danfoss.

For the application use with R744 as part of a secondary loop or cascade:

1. *The design pressure of the refrigerant containing component is not less than the design pressure of the associated components.*
2. *The component is not provided with any pressure relief or pressure regulating relief valve and that a sufficient number of valves having capacity deemed adequate shall be field-installed on the refrigeration system.*
3. *When the refrigeration system is de-energized, venting of R744 may occur through the pressure regulating relief valves, and may need to be recharged, but the valve should not be defeated or bypassed.*
4. *A sufficient number of pressure relief and pressure regulating valves may need to be provided based upon system capacity and located such that no stop valve is provided between the relief valve and the parts or section of the system being protected.*

Ordering

SGP X without indicator

	Type	Connection type	Connection [inch]	Connection [mm]	Code no.
	SGP 10 X	Flare ext. × ext.	3/8 × 3/8	10 × 10	014L0080
	SGP 12s X	Solder ODF x ODF	1/2 × 1/2	–	014L0086
	SGP 16s X	Solder ODF x ODF	5/8 × 5/8	16 × 16	014L0087
	SGP 22s X	Solder ODF x ODF	7/8 × 7/8	22 × 22	014L1207

SGP I with I type indicator

	Type	Connection type	Connection [inch]	Connection [mm]	Code no.
	SGP 6 I	Flare ext. × ext.	1/4 × 1/4	6 × 6	014L0007
	SGP 10 I	Flare ext. × ext.	3/8 × 3/8	10 × 10	014L0008
	SGP 12 I	Flare ext. × ext.	1/2 × 1/2	12 × 12	014L0009
	SGP 16 I	Flare ext. × ext.	5/8 × 5/8	16 × 16	014L0024
	SGP 19 I	Flare ext. × ext.	3/4 × 3/4	19 × 19	014L0028
	SGP 6 I	Flare int. × ext. [1])	1/4 × 1/4	6 × 6	014L0021
	SGP 10 I	Flare int. × ext. [1])	3/8 × 3/8	10 × 10	014L0022
	SGP 12 I	Flare int. × ext. [1])	1/2 × 1/2	12 × 12	014L0025
	SGP 16 I	Flare int. × ext. [1])	5/8 × 5/8	16 × 16	014L0026
	SGP 19 I	Flare int. × ext. [1])	3/4 × 3/4	19 × 19	014L0043
	SGP 6s I	ODF × ODF solder	1/4 × 1/4	–	014L0034
		ODF × ODF solder	–	6 × 6	014L0040
	SGP 10s I	ODF × ODF solder	3/8 × 3/8	–	014L0035
		ODF × ODF solder	–	10 × 10	014L0041
	SGP 12s I	ODF × ODF solder	1/2 × 1/2	–	014L0036
		ODF × ODF solder	–	12 × 12	014L0042
	SGP 16s I	ODF × ODF solder	5/8 × 5/8	16 × 16	014L0044
	SGP 18s I	ODF × ODF solder	–	18 × 18	014L0045
	SGP 19s I	ODF × ODF solder	3/4 × 3/4	19 × 19	014L0047
	SGP 22s I	ODF × ODF solder	7/8 × 7/8	22 × 22	014L0039
	SGP 6s I	ODF × ODM solder	1/4 × 1/4	–	014L0125
	SGP 10s I	ODF × ODM solder	3/8 × 3/8	–	014L0126
	SGP 12s I	ODF × ODM solder	1/2 × 1/2	–	014L0127
	SGP 16s I	ODF × ODM solder	5/8 × 5/8	16 × 16	014L0128
	SGP 22s I	ODF × ODM solder	7/8 × 7/8	22 × 22	014L0130

[1]) *Can be screwed directly into the filter drier*

Notes:

- *Only solder versions are allowed for flammable refrigerants.*
  This product is approved for R290, R600, R600a and R1270 by ignition source assessment in accordance to standard EN13463-1.

Ordering

SGP N with N type indicator

	Type	Connection type	Connection [inch]	Connection [mm]	Code no.
	SGP 6 N	Flare ext. × ext.	1/4 × 1/4	6 × 6	**014L0161**
	SGP 10 N	Flare ext. × ext.	3/8 × 3/8	10 × 10	**014L0162**
	SGP 12 N	Flare ext. × ext.	1/2 × 1/2	12 × 12	**014L0163**
	SGP 16 N	Flare ext. × ext.	5/8 × 5/8	16 × 16	**014L0165**
	SGP 19 N	Flare ext. × ext.	3/4 × 3/4	19 × 19	**014L0166**
	SGP 6 N	Flare int. × ext. [1])	1/4 × 1/4	6 × 6	**014L0171**
	SGP 10 N	Flare int. × ext. [1])	3/8 × 3/8	10 × 10	**014L0172**
	SGP 12 N	Flare int. × ext. [1])	1/2 × 1/2	12 × 12	**014L0173**
	SGP 16 N	Flare int. × ext. [1])	5/8 × 5/8	16 × 16	**014L0174**
	SGP 19 N	Flare int. × ext. [1])	3/4 × 3/4	19 × 19	**014L0175**
	SGP 6s N	ODF × ODF solder	1/4 × 1/4	–	**014L0181**
		ODF × ODF solder	–	6 × 6	**014L0191**
	SGP 10s N	ODF × ODF solder	3/8 × 3/8	–	**014L0182**
		ODF × ODF solder	–	10 × 10	**014L0192**
	SGP 12s N	ODF × ODF solder	1/2 × 1/2	–	**014L0183**
		ODF × ODF solder	–	12 × 12	**014L0193**
	SGP 16s N	ODF × ODF solder	5/8 × 5/8	16 × 16	**014L0184**
	SGP 18s N	ODF × ODF solder	–	18 × 18	**014L0195**
	SGP 19s N	ODF × ODF solder	3/4 × 3/4	19 × 19	**014L0185**
	SGP 22s N	ODF × ODF solder	7/8 × 7/8	22 × 22	**014L0186**
	SGP 22s N [2])	ODF × ODF solder	1 1/8 × 1 1/8	–	**014L0187**
	SGP 6s N	ODF × ODM solder	1/4 × 1/4	–	**014L0201**
	SGP 10s N	ODF × ODM solder	3/8 × 3/8	–	**014L0202**
	SGP 12s N	ODF × ODM solder	1/2 × 1/2	–	**014L0203**
	SGP 16s N	ODF × ODM solder	5/8 × 5/8	16 × 16	**014L0204**
	SGP 22s N	ODF × ODM solder	7/8 × 7/8	22 × 22	**014L0206**

[1]) *Can be screwed directly into the filter drier*
[2]) *Oversize connections*

Notes:
- *Only solder versions are allowed for flammable refrigerants.*
  This product is approved for R290, R600, R600a and R1270 by ignition source assessment in accordance to standard EN13463-1.

Ordering

No indicator

	Valve type	Indicator	Connection type	Connection	Floating ball [pc]	O-ring	Code no.
	SGP ¾ RX	No	G thread	G 3/4 A [1])	1	No	**014L0004**
		No	NPT	3/4 – 14 NPT [2])	1	No	**014L0005**
	SGP ½ RX	No	NPT	1/2 – 14 NPT [2])	3	No	**014L0002**

Indicator

	SGP ½ RI	I type	NPT	1/2 – 14 NPT [2])	3	No	**014L0131**
	SGP 24 RI	I type	M thread	M24 × 1	–	Yes	**014L1154**
	SGP ½ RN	N type	NPT	1/2 – 14 NPT [2])	3	No	**014L0006**
	SGP 24 RN	N type	M thread	M24 × 1	–	Yes	**014L1155**
	SGP 20 RN	N type	M thread	M20 × 1.5	–	No	**014L1601**

Saddle

	Valve type	Connection type	Connection	Tube connection [in]	Industrial pack [pcs]	Code no.
	SGS	Tube fitting	M20 × 1.5	1 1/8	80	**014-1071**
		Tube fitting	M20 × 1.5	1 3/8	80	**014-1074**
		Tube fitting	M24 × 1	7/8	80	**014-1059**
		Tube fitting	M24 × 1	1 1/8	80	**014-1056**
		Tube fitting	M24 × 1	1 3/8	80	**014-1057**
		Tube fitting	M24 × 1	1 5/8	80	**014-1058**
		Tube fitting	M24 × 1	2 1/8	80	**014-1067**

[1]) *ISO 228-1*
[2]) *ANSI/ASME B1.20.1*

Dimensions and weights

SI units

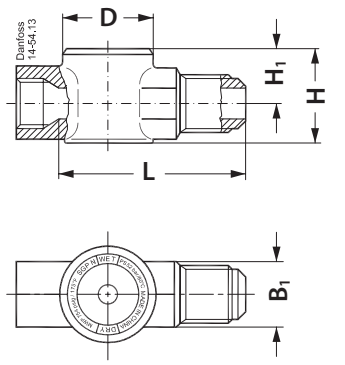

SGP flare, int. × ext.

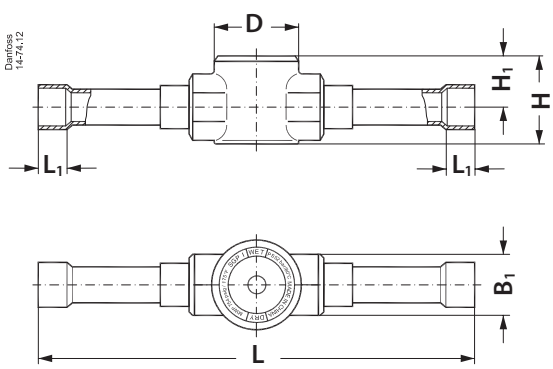

SGP solder ODF × ODF

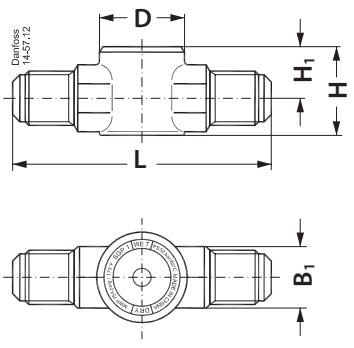

SGP flare, ext. × ext.

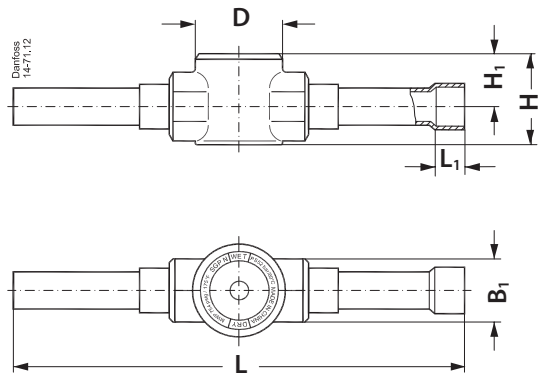

SGP solder ODF × ODM

SI Units

Type	Connection type	L	L_1	H	H_1	B_1	øD	Net weight
		[mm]	[mm]	[mm]	[mm]	[mm]	[mm]	[Kg]
SGP 6 N, SGP 6 I	Flare ext. x ext.	67	–	25	15	14	27	0.1
SGP 10 N, SGP 10 I		82	–	29	17	19	32	0.2
SGP 12 N, SGP 12 I		88	–	31	19	22	32	0.3
SGP 16 N, SGP 16 I		104	–	38	22	27	32	0.4
SGP 19 N, SGP 19I		110	–	42	23	32	37	0.6
SGP 6 N, SGP 6 I	Flare int. × ext.	46	–	25	15	16	27	0.1
SGP 10 N, SGP 10 I		57	–	29	17	22	32	0.2
SGP 12 N, SGP 12 I		59	–	31	19	24	32	0.2
SGP 16 N, SGP 16 I		71	–	38	22	27	32	0.4
SGP 19 N, SGP 19 I		75	–	42	23	32	37	0.5
SGP 6s N, SGP 6s I	Solder ODF × ODF	101	7	24	15	14	27	0.1
SGP 10s N, SGP 10s I		119	9	24	15	14	27	0.1
SGP 12s N, SGP 12s I		146	10	29	17	19	32	0.2
SGP 16s N, SGP 16s I		146	12	31	19	22	32	0.2
SGP 18s N, SGP 18s I		173	14	38	22	27	32	0.3
SGP 19s N, SGP 19s I		173	14	38	22	27	32	0.3
SGP 22s N, SGP 22s I		173	17	39	23	27	32	0.3
SGP 22s N, SGP 22s I [1])		173	22	39	23	27	32	0.3
SGP 6s N, SGP 6s I	Solder ODF × ODM	101	7	24	15	14	27	0.1
SGP 10s N, SGP 10s I		119	9	24	15	14	27	0.1
SGP 12s N, SGP 12s I		146	10	29	17	19	32	0.2
SGP 16s N, SGP 16S I		146	12	31	19	22	32	0.2
SGP 22s N, SGP 22s I		173	17	38	22	27	32	0.3

[1]) *Oversize connections*

Dimensions and weights
US units

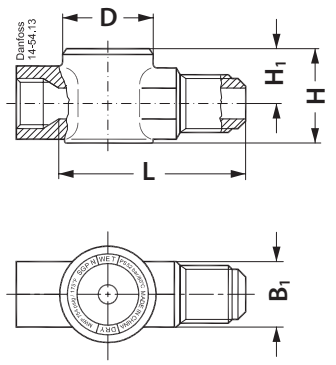

SGP flare, int. × ext.

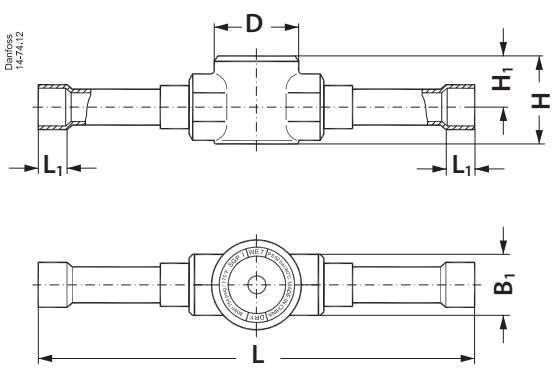

SGP solder ODF × ODF

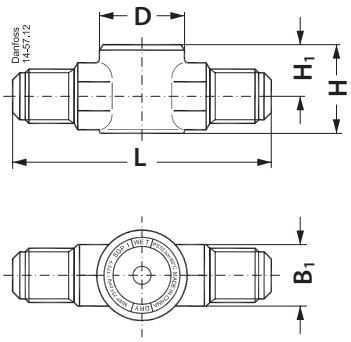

SGP flare, ext. × ext.

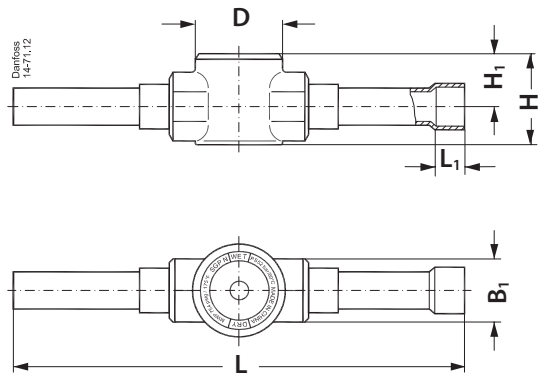

SGP solder ODF × ODM

US Units

Type	Connection type	L	L_1	H	H_1	B_1	øD	Net weight
		[in]	[in]	[in]	[in]	[in]	[in]	[lbs]
SGP 6 N, SGP 6 I	Flare ext. x ext.	2.64	–	0.98	0.59	0.55	1.06	0.22
SGP 10 N, SGP 10 I		3.23	–	1.14	0.67	0.75	1.26	0.44
SGP 12 N, SGP 12 I		3.46	–	1.22	0.75	0.87	1.26	0.66
SGP 16 N, SGP 16 I		4.09	–	1.50	0.87	1.06	1.26	0.88
SGP 19 N, SGP 19I		4.33	–	1.65	0.91	1.26	1.46	1.32
SGP 6 N, SGP 6 I	Flare int. × ext.	1.81	–	0.98	0.59	0.63	1.06	0.22
SGP 10 N, SGP 10 I		2.24	–	1.14	0.67	0.87	1.26	0.44
SGP 12 N, SGP 12 I		2.32	–	1.22	0.75	0.94	1.26	0.44
SGP 16 N, SGP 16 I		2.80	–	1.50	0.87	1.06	1.26	0.88
SGP 19 N, SGP 19 I		2.95	–	1.65	0.91	1.26	1.46	1.10
SGP 6s N, SGP 6s I	Solder ODF × ODF	3.98	0.28	0.94	0.59	0.55	1.06	0.22
SGP 10s N, SGP 10s I		4.69	0.35	0.94	0.59	0.55	1.06	0.22
SGP 12s N, SGP 12s I		5.75	0.39	1.14	0.67	0.75	1.26	0.44
SGP 16s N, SGP 16s I		5.75	0.47	1.22	0.75	0.87	1.26	0.44
SGP 18s N, SGP 18s I		6.81	0.55	1.50	0.87	1.06	1.26	0.66
SGP 19s N, SGP 19s I		6.81	0.55	1.50	0.87	1.06	1.26	0.66
SGP 22s N, SGP 22s I		6.81	0.67	1.54	0.91	1.06	1.26	0.66
SGP 22s N, SGP 22s I [1])		6.81	0.87	1.54	0.91	1.06	1.26	0.66
SGP 6s N, SGP 6s I	Solder ODF × ODM	3.98	0.28	0.94	0.59	0.55	1.06	0.22
SGP 10s N, SGP 10s I		4.69	0.35	0.94	0.59	0.55	1.06	0.22
SGP 12s N, SGP 12s I		5.75	0.39	1.14	0.67	0.75	1.26	0.44
SGP 16s N, SGP 16S I		5.75	0.47	1.22	0.75	0.87	1.26	0.44
SGP 22s N, SGP 22s I		6.81	0.67	1.50	0.87	1.06	1.26	0.66

[1]) *Oversize connections*

Dimensions and weights

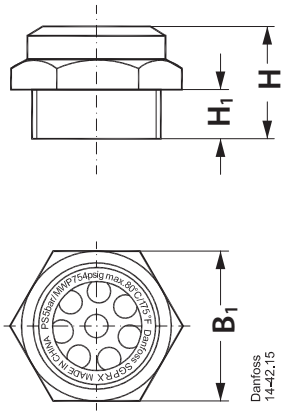

SGP socket

Type	Connection type	Connection	H	H1	B1	Net. weight
			[mm]	[mm]	[mm]	[kg]
SGP ³/₄ RX	G thread	G ³/₄ A [1])	24	10	32	0.1
SGP ¹/₂ RX	NPT	¹/₂ – 14 NPT [2])	31	18	27	0.1
SGP ³/₄ RX	NPT	³/₄ – 14 NPT [2])	32	18	32	0.1
SGP ¹/₂ RN / SGP ¹/₂ RI	NPT	¹/₂ – 14 NPT [2])	31	18	27	0.1
SGP 24 RN / SGP 24 RI	M thread	M24 × 1	29	15	32	0.1
SGP 20 RN	M thread	M20 x 1.5	26	13	27	0.1

Type	Connection type	Connection	H	H1	B1	Net. weight
			[in]	[in]	[in]	[lbs]
SGP ³/₄ RX	G thread	G ³/₄ A [1])	0.94	0.39	1.26	0.22
SGP ¹/₂ RX	NPT	¹/₂ – 14 NPT [2])	1.22	0.71	1.06	0.22
SGP ³/₄ RX	NPT	³/₄ – 14 NPT [2])	1.26	0.71	1.26	0.22
SGP ¹/₂ RN / SGP ¹/₂ RI	NPT	¹/₂ – 14 NPT [2])	1.22	0.71	1.06	0.22
SGP 24 RN / SGP 24 RI	M thread	M24 × 1	1.14	0.59	1.26	0.22
SGP 20 RN	M thread	M20 x 1.5	1.02	0.51	1.06	0.22

Danfoss can accept no responsibility for possible errors in catalogues, brochures and other printed material. Danfoss reserves the right to alter its products without notice. This also applies to products already on order provided that such alterations can be made without subsequential changes being necessary in specifications already agreed.
All trademarks in this material are property of the respective companies. Danfoss and the Danfoss logotype are trademarks of Danfoss A/S. All rights reserved.