ENGINEERING
TOMORROW

European Catalogue

Optyma™
Bare condensing units

R290, R452A, R134a/R513A, R448A, R449A, R407A, R407C, R407F, R404A/R507

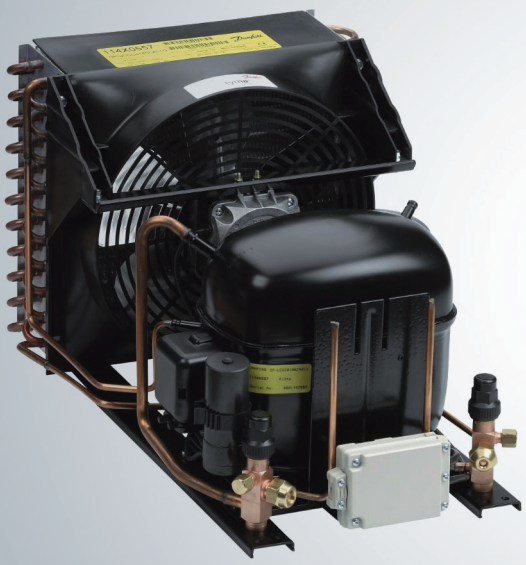

www.danfoss.com | EcoDesign 2018 | Optyma™ by Danfoss

Danfoss Optyma™ bare condensing units 4
Optyma™ Range and feature overview 5
Optyma™ Light Commercial 6

Performance data 7
Optyma™ Light Commercial - Performance data - R290 LBP 7
Optyma™ Light Commercial - Performance data - R452A LBP 8
Optyma™ Commercial - Performance data - R452A LBP 9
Optyma™ Light Commercial - Performance data - R404A/R507 LBP 11
Optyma™ Commercial - Performance data - R404A/R507 LBP 13
Optyma™ Light Commercial - Performance data - R290 MBP 15
Optyma™ Light Commercial - Performance data - R134a/R513A* MBP 16
Optyma™ Commercial - Performance data - R134a/R513A* MBP 18
Optyma™ Commercial - Performance data - R448A MBP 21
Optyma™ Commercial - Performance data - R449A MBP 24
Optyma™ Commercial - Performance data - R452A MBP 27
Optyma™ Commercial - Performance data - R407A MBP 30
Optyma™ Commercial - Performance data - R407F MBP 33
Optyma™ Commercial - Performance data - R407C MBP 36
Optyma™ Light Commercial - Performance data - R404A/R507 MBP 39
Optyma™ Commercial - Performance data - R404A/R507 MBP 40

Technical data 43
Optyma™ Light Commercial - Technical data - R290 43
Optyma™ Light Commercial - Technical data - R134a/R513A - R452A - R404A/R507 44
Optyma™ Commercial - Technical data 45

Spare parts & accessories 46
Optyma™ Light Commercial - Spare parts & accessories - LBP - R290 46
Optyma™ Light Commercial - Spare parts & accessories - LBP - R452A - R404A/R507 47
Optyma™ Light Commercial - Spare parts & accessories - MBP - R290 48
Optyma™ Light Commercial - Spare parts & accessories - MBP - R134a - R404A/R507 49
Optyma™ Commercial - Spare parts & accessories - LBP 50
Optyma™ Commercial - Spare parts & accessories - MBP 51

Spare parts & accessories list 53
Optyma™ Light Commercial - Spare parts & accessories list 53
Optyma™ Commercial - Spare parts & accessories list 55

Dimensions 56
Optyma™ Light Commercial - Dimensions 56
Optyma™ Commercial - Dimensions 57

Electrical wiring diagrams 60
Optyma™ Light Commercial - Electrical wiring diagrams - R290 60
Optyma™ Light Commercial - Electrical wiring diagrams - R134a, R404A/R507 & R452A 62
Optyma™ Commercial - Electrical wiring diagrams 63

Danfoss Optyma™
bare condensing units

Robust, efficient and reliable condensing units, saving on service and maintenance costs and reducing energy consumption.

Benefits for the contractor

- Broad working envelop
- Multiple lower-GWP refrigerants
- Commercial range with microchannel condenser reducing the refrigerant charge and Light commercial range with fine & tube condenser
- Some of the most reliable hermetic reciprocating compressor on the market
- Economical €/kW value

Benefits for the end-user

- Reliable solution
- Low energy consumption under changing working conditions
- Easy & simple condenser maintenance

Optyma™ **Light Commercial**
up to ~1.5 kW

Complete line featuring a higher efficiency and a reduced footprint, available also with R290 making it the perfect choice for a greener installation. This solution is ideal for OEMs or end-users looking for compact products to fit in small systems, and optimal cooling performance and capacity.

Optyma™ **Commercial**
from ~1.5 kW and up

Highly efficient new line with microchannel condenser, multiple lower-GWP refrigerants, and working up to 46°C ambient temperature. Easy to install and service. Quieter by up to 3 dB(A) thanks to 6 pole fan motor instead of 4 pole fan.

MBP and LBP **applications**

- Industrial Processes
- Milk-Cooling
- Cold rooms in fisheries, florists, etc.
- Commercial frigde and freezers, display cases, bottle coolers, serving tables

Designation

OP - LCQN 048 MT A02 E

1 2 3 4 5 6 7 8

OP = Optyma

1	**Application:** **M** = Medium Back Pressure ; **L** = Low Back Pressure
2	**Platform:** **C:** Air cooled condensing unit with single fan **G:** Air cooled condensing unit with dual fan
3	**Refrigerant:** **R:** R134a, R404A/R507, R407C, R407A, R407F, R448A, R449A, R452A **G:** R134a, R513A **H:** R404A/R507 **Q:** R452A, R404A/R507 **N:** R290
4	**Condenser design:** **C:** Fin & Tube condenser, ambient temperature up to 43°C **N:** Microchannel condenser, ambient temperature up to 46°C

Feature overview:

	Light Commercial			Light Commercial R290			Commercial
	A00	A01	A04	A09	A10	A11	A02
Ambient temperature	Up to 43°C			Up to 43°C			Up to 46°C
Hermetic reciprocating compressor	MPT, MLY, NL, SC, GS, FR, TL, NF			NLY, NBC, NPT, NS, NX			MTZ, NTZ
Unit base	Rails or base plate						Base plate
Condenser type	Fin & Tube (painted)						Microchannel
Fan	AC/EC	AC/EC	AC/EC	EC	EC	EC	AC 6 pole
Bracket & tube for pressostat mounting	-	yes	yes	yes	-	-	-
Dual KP pressure switch	-	-	yes	-	-	-	yes
Schrader valve	-	-	-	yes	yes	yes	-
Wired electrical box	yes	yes	yes	yes	yes	yes	yes
Mini HP/LP pressostat	-	-	-	-	yes	-	-
Power cord	-	-	yes	-	yes	-	-
Receiver	-	yes	yes	-	Combo drier + receiver	-	yes
Net weight in kg	**14 chassis:** Lighter: 14 Bigger: 42			**4 chassis:** Lighter: 14 Bigger: 41			**5 chassis:** Lighter single fan: 62 Bigger single fan: 158 Lighter dual fan: 134 Bigger dual fan: 212
Dimensions in mm (height x width x depth)	**14 chassis:** Smaller: 205 x 289 x 424 Larger: 350 x 445 x 613			**4 chassis:** Smaller: 226 x 286 x 513 Larger: 350 x 442 x 480			**5 chassis:** Smaller single fan: 545 x 630 x 650 Larger single fan: 836.5 x 1200 x 800 Smaller dual fan: 693.5 x 1500 x 870 Larger dual fan: 836.5 x 1500 x 870

Overview by range and refrigerant:

Min / Max cooling capacity (kW)	Light Commercial	Commercial
Medium temperature (MBP)		
R290	0.2 - 1.4	
R448A		2 - 20.5
R449A		2 - 20.5
R134a / R513A*	0.1 - 1.6	1.3 - 13.1
R452A		2.2 - 20.6
R407A		1.9 - 19.1
R407C		1.8 - 19.1
R407F		2 - 20.1
R404A/507	0.3 - 17	2.2 - 21.7
Low temperature (LBP)		
R290	0.1 - 0.7	
R452A	0.1 - 0.3	0.8 - 6.1
R404A/507	0.1 - 0.9	0.9 - 6.6

*R513A is preliminary

5	**Compressor displacement:** Example 048 = 48 cm³
6	**Reciprocating compressor platform:** **FR** = FR **NF** = NF **SC** = SC **GS** = GS **NX** = NX **NB** = NBC **NS** = NS **NY** = NLY **NP** = NPT **MP** = MPT **MY** = MLY **MX** = MX **NT** = NTZ **MT** = MTZ **TL** = TL **NL** = NL
7	**Version:** A00, A01, A02, A04, A09, A10, A11. See table above for features within each version.
8	**Electrical code:** **G:** Compressor 230V/1P/50Hz, fan 230V/1P/50Hz **E:** Compressor 400V/3P/50Hz, fan 230V/1P/50Hz

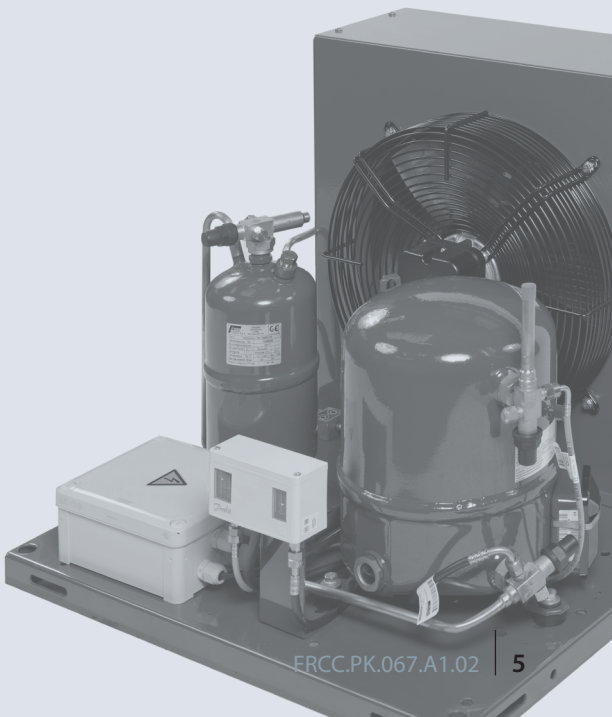

Optyma™ Light Commercial – up to ~1.5 kW

Specially designed for key commercial applications such as glass door merchandisers, bottle coolers, chilled food or ice cream cabinets. To meet the latest guidelines while satisfying tomorrow's consumer needs, Danfoss compressors use the environmentally friendly R290 propane as a refrigerant.

Faster and safer installation and maintenance

Schrader valve for easy charging of refrigerant, pre-wired e-box, ACB mini pressostat and ATEX class N fan motor for enhanced safety.

R290 natural refrigerant

The major environmental benefits are obtained combining the use of the R290 with the design criteria of highly efficient compressors and EC fan motor.

Serviceability and compactness

Combo of drier and receiver in one piece making it the ideal fit for compact systems and providing higher serviceability.

Universal

Most of units are designed with rail concept allowing easy condensed water evacuation, high airflow, and reduced height to fit display cabinets. Suited for high ambient temperatures thanks to EC fan ATEX class N.

R290 unit

Energy efficient, environmentally friendly and safe hydrocarbons

Hydrocarbons such as propane R290 have excellent thermodynamic properties, and in this respect they are as good as or better than HFC or HCFC refrigerants in most applications. When they are used responsibly and relevant norms are followed, hydrocarbons can be employed in a variety of refrigeration and air conditioning applications. Hydrocarbons can deliver high energy efficiency and have zero Ozone Depletion Potential (ODP) and negligible Global Warming Potential (GWP).

Relevant norms & standards when working with hydrocarbon refrigerants:

ATEX 94/9/EC Directive
Specifies the requirements for equipment intended for use in potentially explosive atmospheres (both electrical and mechanical). Organizations in EU must follow the directive to protect employees from explosion risk in areas with an explosive atmosphere.

Pressure Equipment Directive 97/23/EC (PED)
The directive provides a legislative framework for pressurized equipment and assemblies.

EN378 1-4
EN378 defines "best practice" for design, operation and maintenance. It is a harmonised standard, which ensures that all essential requirements in the PED are fulfilled.

ISO 5149 1-4
The international safety standard, defines "best practices" very similarly to EN378, but without referring to EU law.

IEC 60335: International Standard
Specifies all requirements for small hermetically sealed household appliances (supports the EU Low Voltage Directive (2006/95/EC). It deals with the safety of electrical appliances for household and similar purposes.

Model	Code	Version	Compressor	Electrical code (1)	Tamb [°C]	Cooling capacity Q [kW] (2) Te [°C] -40°C	-35°C	-30°C	-25°C	-20°C	-15°C	-10°C	EcoDesign (3) Q [kW]	P [kW]	COP	SEPR
OP-LCNC004	114F0202 114F0203 114F0201	A09 A10 A11	NLY45LAb	G	27	0.095	0.128	0.166	0.209	0.256	0.307	0.363				
					32	0.086	0.116	0.152	0.192	0.236	0.284	0.337	0.124	0.119	1.04	
					38	0.075	0.103	0.134	0.171	0.212	0.257	0.307				
					43	0.067	0.091	0.120	0.154	0.192	0.235	0.282				
OP-LCNC006	114F0205 114F0206 114F0204	A09 A10 A11	NLY60LAb	G	27	0.120	0.163	0.211	0.265	0.323	0.386	0.453				
					32	0.110	0.148	0.193	0.242	0.296	0.356	0.419	0.158	0.149	1.06	
					38	0.097	0.131	0.170	0.215	0.265	0.320	0.379				
					43	0.087	0.116	0.152	0.193	0.239	0.290	0.346				
OP-LCNC008	114F0308 114F0309 114F0307	A09 A10 A11	NLY80LAb	G	27	0.162	0.219	0.284	0.356	0.436	0.523	0.616				
					32	0.148	0.199	0.258	0.325	0.400	0.482	0.571	0.212	0.196	1.08	
					38	0.131	0.175	0.228	0.289	0.357	0.433	0.517				
					43	0.117	0.156	0.203	0.259	0.322	0.393	0.472				
OP-LCNC011	114F0411 114F0412 114F0410	A09 A10 A11	NPY12LAb	G	27	0.258	0.342	0.440	0.550	0.671	0.805	0.950				
					32	0.235	0.312	0.402	0.505	0.619	0.746	0.884	0.332	0.289	1.15	
					38	0.208	0.276	0.357	0.451	0.557	0.675	0.805				
					43	0.185	0.246	0.320	0.406	0.505	0.616	0.740				
OP-LCNC016	114F0414 114F0415 114F0413	A09 A10 A11	NPT16LA	G	27	0.344	0.460	0.590	0.731	0.883	1.045	1.218				
					32	0.315	0.421	0.539	0.670	0.812	0.965	1.129	0.450	0.391	1.15	
					38	0.282	0.374	0.480	0.598	0.728	0.869	1.022				
					43	0.254	0.335	0.430	0.538	0.658	0.790	0.933				
OP-LCNC023	114F0417 114F0418 114F0416	A09 A10 A11	NX23FBa	G	27	0.421	0.570	0.731	0.903	1.086	1.280	1.484				
					32	0.382	0.518	0.667	0.827	0.999	1.182	1.375	0.556	0.537	1.03	
					38	0.335	0.456	0.590	0.737	0.895	1.065	1.245				
					43	0.296	0.405	0.527	0.662	0.809	0.967	1.137				
OP-LCNC034	114F0620 114F0621 114F0619	A09 A10 A11	NS34FB	G	27	0.557	0.784	1.042	1.326	1.636	1.967	2.317				
					32	0.484	0.692	0.931	1.197	1.488	1.801	2.135	0.739	0.625	1.18	
					38	0.399	0.584	0.800	1.043	1.312	1.604	1.916				
					43	0.329	0.495	0.691	0.916	1.166	1.440	1.734				

LBP

(1) E - 400V-3ph-50Hz Compressor & 230V-1ph-50Hz Fan
G - 230V-1ph-50Hz Compressor & 230V-1ph-50Hz Fan

(2) Nominal conditions (EN13215), Evaporating temperatures at dew point, Superheat 10K, Subcooling 0K

(3) Rated conditions (EN13215), Evaporating temperature (dew point) -35°C, Ambient air temperature +32°C, Return Gas Temperature 20°C, Subcooling 0K

COP: Coefficient Of Perfromance link to EN13215 and ErP (Energy related Products) 2009/125/CE
SEPR: Seasonal Energy Performance Ratio link to EN13215 and ErP (Energy Related Products) 2009/125/CE
Tamb [°C]: Ambient Temperature
Te [°C]: Evaporating Temperature
Q [kW]: Cooling Capacity in Kilo Watt
P [kW]: Power Input in Kilo Watt

Version
A09: Tube for KP pressostat + Wired Ebox + Schrader valve
A10: Mini pressure switch + Wired Ebox + Combo Filter drier + Schrader valve
A11: Wired Ebox + Schrader valve

Model	Code	Version	Compressor	Electrical code (1)	Tamb [°C]	Cooling capacity Q [kW] (2)							EcoDesign (3)			
						Te [°C]							Q [kW]	P [kW]	COP	SEPR
						-40°C	-35°C	-30°C	-25°C	-20°C	-15°C	-10°C	-5°C				
OP-LCQC004	114X1221	A01	MLY45LAb	G	27		0.140	0.142	0.157	0.187	0.235	0.304					
					32		0.121	0.127	0.146	0.182	0.235	0.310		0.134	0.165	0.81	
					38		0.099	0.109	0.134	0.175	0.234	0.316					
					43		0.080	0.094	0.123	0.168	0.233	0.320					
OP-LCQC006	114X1337	A01	MLY60LAb	G	27		0.140	0.164	0.205	0.264	0.340	0.436					
					32		0.126	0.152	0.194	0.253	0.331	0.428		0.140	0.167	0.84	
					38		0.110	0.136	0.180	0.240	0.319	0.417					
					43		0.096	0.124	0.167	0.228	0.308	0.406					
OP-LCQC008	114X1341	A01	MLY80LAb	G	27		0.210	0.276	0.346	0.418	0.493	0.571					
					32		0.186	0.246	0.309	0.375	0.444	0.516		0.208	0.235	0.88	
					38		0.158	0.210	0.265	0.323	0.385	0.450					
					43		0.135	0.180	0.228	0.280	0.336	0.395					
OP-LCQC012	114X1449	A01	MLY12LAb	G	27		0.309	0.400	0.500	0.607	0.721	0.843					
					32		0.276	0.359	0.450	0.549	0.656	0.771		0.307	0.321	0.96	
					38		0.237	0.309	0.391	0.480	0.578	0.684					
					43		0.204	0.269	0.342	0.423	0.513	0.611					
OP-LCQC012	114X1569	A01	MPT12LA	G	27		0.368	0.470	0.581	0.698	0.823	0.955					
					32		0.328	0.421	0.521	0.630	0.746	0.869		0.365	0.371	0.98	
					38		0.281	0.361	0.450	0.548	0.653						
					43		0.242	0.312	0.392	0.480							
OP-LCQC014	114X1573	A01	MPT14LA	G	27		0.415	0.525	0.642	0.765	0.894	1.028					
					32		0.372	0.472	0.578	0.692	0.811	0.936		0.415	0.436	0.95	
					38		0.322	0.409	0.503	0.604	0.712						
					43		0.280	0.357	0.441	0.532							

LBP

(1) E - 400V-3ph-50Hz Compressor & 230V-1ph-50Hz Fan
G - 230V-1ph-50Hz Compressor & 230V-1ph-50Hz Fan

(2) Nominal conditions (EN13215), Evaporating temperatures at dew point, Superheat 10K, Subcooling 0K

(3) Rated conditions (EN13215), Evaporating temperature (dew point) -35°C, Ambient air temperature +32°C, Return Gas Temperature 20°C, Subcooling 0K

COP: Coefficient Of Perfromance link to EN13215 and ErP (Energy related Products) 2009/125/CE
SEPR: Seasonal Energy Performance Ratio link to EN13215 and ErP (Energy Related Products) 2009/125/CE
Tamb [°C]: Ambient Temperature
Te [°C]: Evaporating Temperature
Q [kW]: Cooling Capacity in Kilo Watt
P [kW]: Power Input in Kilo Watt

Version
A00: Without valves and receiver for capillary tubes
A01: With receiver, 2stop valves, brackets and copper pipes for KP
A04: A01 + KP17 WB + FSA-kit + power cord

For regular updates and detailed capacities, please refer to **Coolselector®2** software

Model	Code	Version	Compressor	Electrical code (1)	Tamb [°C]	Cooling capacity Q [kW] (2) Te [°C] -35°C	-30°C	-25°C	-20°C	-15°C	-10°C	EcoDesign (3) Q [kW]	P [kW]	COP	SEPR	Sound power level dB(A)	Sound pressure level 10 m dB(A)
OP-LCQN048	114X5758	A02	NTZ048	E	27	0.990	1.299	1.648	2.031	2.439	2.864						
					32	0.873	1.152	1.467	1.814	2.185	2.571	0.977	0.944	1.03		73	42
					38	0.742	0.985	1.261	1.564	1.889	2.228						
					43		0.854	1.097	1.364	1.649							
					46		0.779	1.001	1.246	1.508							
OP-LCQN048	114X5759	A02	NTZ048	G	27	0.996	1.331	1.709	2.123	2.563	3.019						
					32	0.867	1.174	1.520	1.898	2.300	2.716	0.969	0.909	1.07		73	42
					38	0.723	0.995	1.302	1.637	1.992	2.359						
					43		0.854	1.128	1.426	1.741	2.065						
					46		0.773	1.027	1.302	1.592	1.889						
OP-LCQN068	114X5761	A02	NTZ068	E	27	1.673	2.185	2.752	3.358	3.981	4.597						
					32	1.476	1.944	2.460	3.008	3.570	4.123	1.650	1.446	1.14		71	40
					38	1.239	1.652	2.106	2.586	3.074	3.548						
					43		1.410	1.811	2.233	2.658							
					46		1.266	1.635	2.022	2.409							
OP-LCQN068	114X5762	A02	NTZ068	G	27	1.689	2.182	2.732	3.333	3.977	4.656						
					32	1.467	1.924	2.433	2.988	3.583	4.209	1.640	1.674	0.98		71	40
					38	1.209	1.622	2.081	2.581	3.116	3.678						
					43		1.378	1.794	2.247	2.731							
					46		1.234	1.625	2.049	2.502							
OP-LCQN096	114X5764	A02	NTZ096	E	27	1.977	2.582	3.260	3.994	4.766	5.560						
					32	1.733	2.280	2.895	3.561	4.263	4.983	1.942	1.859	1.04		82	51
					38	1.450	1.927	2.464	3.048	3.664	4.295						
					43		1.641	2.114	2.628	3.170							
					46		1.475	1.907	2.379	2.875							
OP-LGQN096	114X5766	A02	NTZ096	E	27	2.427	3.297	4.352	5.600	7.046	8.697						
					32	2.141	2.938	3.908	5.061	6.404	7.942	2.366	1.820	1.30	1.70	82	51
					38	1.803	2.509	3.376	4.413	5.628	7.029						
					43		2.158	2.936	3.873	4.981							
					46		1.952	2.675	3.552	4.593							

LBP

This table continues on the next page

(1) E - 400V-3ph-50Hz Compressor & 230V-1ph-50Hz Fan
G - 230V-1ph-50Hz Compressor & 230V-1ph-50Hz Fan
(2) Nominal conditions (EN13215), Evaporating temperatures at dew point, Superheat 10K, Subcooling 0K
(3) Rated conditions (EN13215), Evaporating temperature (dew point) -35°C, Ambient air temperature +32°C, Return Gas Temperature 20°C, Subcooling 0K

COP: Coefficient Of Perfromance link to EN13215 and ErP (Energy related Products) 2009/125/CE
SEPR: Seasonal Energy Performance Ratio link to EN13215 and ErP (Energy Related Products) 2009/125/CE
Tamb [°C]: Ambient Temperature
Te [°C]: Evaporating Temperature
Q [kW]: Cooling Capacity in Kilo Watt
P [kW]: Power Input in Kilo Watt

Version
A02: Receiver + Stop valves + KP17WB pressure switch + Electrical box

Model	Code	Version	Compressor	Electrical code (1)	Tamb [°C]	Cooling capacity Q [kW] (2) Te [°C] -35°C	-30°C	-25°C	-20°C	-15°C	-10°C	EcoDesign (3) Q [kW]	P [kW]	COP	SEPR	Sound power level dB(A)	Sound pressure level 10 m dB(A)
OP-LCQN108	114X5768	A02	NTZ108	E	27	2.973	3.943	5.099	6.444	7.979	9.701						
					32	2.636	3.514	4.565	5.795	7.205	8.795	2.920	2.231	1.31	1.85	78	47
					38	2.258	3.028	3.956	5.047	6.308	7.738						
					43		2.646	3.471	4.449	5.584							
					46		2.426	3.191	4.099	5.16							
OP-LGQN108	114X5769	A02	NTZ108	E	27	3.003	3.991	5.173	6.554	8.138	9.923						
					32	2.662	3.556	4.631	5.894	7.349	8.997	2.946	2.158	1.37	1.95	78	47
					38	2.280	3.065	4.013	5.134	6.435	7.919						
					43		2.679	3.523	4.527	5.700							
					46		2.456	3.238	4.173	5.269							
OP-LGQN136	114X5771	A02	NTZ136	E	27	3.703	4.896	6.312	7.953	9.818	11.898						
					32	3.284	4.364	5.650	7.149	8.859	10.777	3.643	2.902	1.26	1.69	78	47
					38	2.814	3.760	4.893	6.221	7.745	9.467						
					43		3.284	4.291	5.477	6.847							
					46		3.010	3.941	5.043	6.320							
OP-LCQN136	114X5772	A02	NTZ136	E	27	3.657	4.822	6.198	7.785	9.578	11.566						
					32	3.243	4.298	5.548	6.997	8.64	10.472	3.602	2.975	1.21	1.63	78	47
					38	2.779	3.703	4.804	6.086	7.55	9.193						
					43		3.234	4.211	5.355	6.669							
					46		2.963	3.867	4.928	6.153							
OP-LGQN215	114X5774	A02	NTZ215	E	27	5.347	7.107	9.183	11.588	14.329	17.407						
					32	4.725	6.349	8.266	10.491	13.032	15.895	5.238	4.722	1.11	1.63	86	55
					38	4.001	5.456	7.176	9.179	11.476	14.077						
					43		4.730	6.281	8.094	10.183	12.560						
					46		4.303	5.752	7.448	9.410	11.651						
OP-LGQN271	114X5776	A02	NTZ271	E	27	7.015	9.190	11.708	14.576	17.793	21.352						
					32	6.136	8.154	10.487	13.146	16.132	19.444	6.812	5.818	1.17	1.66	86	55
					38	5.112	6.940	9.052	11.459	14.169	17.182						
					43		5.955	7.881	10.079	12.557	15.320						
					46		5.376	7.191	9.261	11.599	14.210						

LBP

(1) E - 400V-3ph-50Hz Compressor & 230V-1ph-50Hz Fan
G - 230V-1ph-50Hz Compressor & 230V-1ph-50Hz Fan

(2) Nominal conditions (EN13215), Evaporating temperatures at dew point, Superheat 10K, Subcooling 0K

(3) Rated conditions (EN13215), Evaporating temperature (dew point) -35°C, Ambient air temperature +32°C, Return Gas Temperature 20°C, Subcooling 0K

COP: Coefficient Of Perfromance link to EN13215 and ErP (Energy related Products) 2009/125/CE
SEPR: Seasonal Energy Performance Ratio link to EN13215 and ErP (Energy Related Products) 2009/125/CE
Tamb [°C]: Ambient Temperature
Te [°C]: Evaporating Temperature
Q [kW]: Cooling Capacity in Kilo Watt
P [kW]: Power Input in Kilo Watt

Version
A02: Receiver + Stop valves + KP17WB pressure switch + Electrical box

For regular updates and detailed capacities, please refer to **Coolselector®2** software

Model	Code	Version	Compressor	Electrical code (1)	Tamb [°C]	Cooling capacity Q [kW] (2)								EcoDesign (3)			
						Te [°C]								Q [kW]	P [kW]	COP	SEPR
						-45°C	-40°C	-35°C	-30°C	-25°C	-20°C	-15°C	-10°C				
OP-LCHC004	114X1208 114X1209 114X1211	A00 A01 A04	TL4CL	G	27	0.051	0.074	0.101	0.133	0.169	0.211	0.259	0.312				
					32	0.052	0.070	0.093	0.120	0.152	0.190	0.233	0.283	0.105	0.131	0.80	
					38	0.047	0.061	0.079	0.101	0.129	0.162	0.202	0.248				
					43	0.040	0.050	0.065	0.084	0.109	0.139	0.175	0.219				
OP-LCQC004	114X1221	A01	MLY45LAb	G	27			0.136	0.182	0.233	0.288	0.347	0.409				
					32			0.120	0.163	0.209	0.259	0.313	0.372	0.136	0.153	0.89	
					38			0.071	0.139	0.180	0.224	0.273	0.326				
					43			0.061	0.119	0.155	0.196	0.240	0.289				
OP-LCHC006	114X1216 114X1217 114X1219	A00 A01 A04	FR6CL	G	27	0.080	0.118	0.163	0.216	0.277	0.347	0.427	0.515				
					32	0.076	0.109	0.149	0.196	0.250	0.313	0.384	0.463	0.168	0.212	0.80	
					38	0.068	0.096	0.129	0.169	0.215	0.269	0.330	0.400				
					43	0.059	0.083	0.112	0.146	0.186	0.232						
OP-LCQC006	114X1337	A01	MLY60LAb	G	27			0.196	0.256	0.320	0.387	0.458	0.532				
					32			0.173	0.227	0.285	0.347	0.412	0.481	0.196	0.217	0.90	
					38			0.146	0.193	0.244	0.298	0.357	0.420				
					43			0.124	0.165	0.209	0.259	0.312	0.370				
OP-LCHC007	114X1328 114X1329 114X1331	A00 A01 A04	NL7CLX	G	27	0.112	0.157	0.211	0.274	0.345	0.425	0.513	0.607				
					32	0.101	0.142	0.191	0.247	0.312	0.385	0.464	0.550	0.217	0.244	0.89	
					38	0.087	0.122	0.165	0.214	0.271	0.335	0.405	0.481				
					43	0.074	0.105	0.142	0.185	0.236	0.292	0.354	0.422				
OP-LCQC008	114X1341	A01	MLY80LAb	G	27			0.226	0.299	0.376	0.458	0.543	0.632				
					32			0.200	0.265	0.335	0.410	0.488	0.571	0.228	0.257	0.89	
					38			0.169	0.225	0.286	0.352	0.423	0.497				
					43			0.144	0.193	0.246	0.305	0.368	0.436				
OP-LCHC008	114X1304 114X1301 114X1302	A00 A01 A04	NL8.4CLX	G	27	0.121	0.169	0.227	0.293	0.369	0.452	0.543	0.64				
					32	0.109	0.153	0.204	0.265	0.333	0.408	0.491	0.579	0.233	0.268	0.87	
					38	0.094	0.131	0.176	0.229	0.288	0.354	0.427	0.504				
					43	0.079	0.112	0.151	0.197	0.249	0.308	0.372	0.441				
OP-LCHC012	114X1440 114X1441 114X1443	A00 A01 A04	SC12CLX	G	27		0.243	0.333	0.439	0.563	0.704	0.862	1.037				
					32		0.198	0.282	0.381	0.496	0.626	0.773	0.936	0.318	0.380	0.84	
					38		0.146	0.221	0.311	0.414	0.533	0.666	0.814				
					43			0.172	0.253	0.347	0.454	0.576	0.711				
OP-LCHC012	114X1444	A00	SC12CLX.2	G	27	0.190	0.260	0.346	0.446	0.563	0.695	0.844	1.009				
					32	0.160	0.226	0.305	0.398	0.506	0.628	0.766	0.919	0.345	0.417	0.83	
					38		0.184	0.256	0.339	0.436	0.547	0.672	0.810				
					43			0.215	0.290	0.378	0.478	0.591	0.718				

LBP

This table continues on the next page

(1) E - 400V-3ph-50Hz Compressor & 230V-1ph-50Hz Fan
G - 230V-1ph-50Hz Compressor & 230V-1ph-50Hz Fan
(2) Nominal conditions (EN13215), Evaporating temperatures at dew point, Superheat 10K, Subcooling 0K
(3) Rated conditions (EN13215), Evaporating temperature (dew point) -35°C, Ambient air temperature +32°C, Return Gas Temperature 20°C, Subcooling 0K

COP: Coefficient Of Perfromance link to EN13215 and ErP (Energy related Products) 2009/125/CE
SEPR: Seasonal Energy Performance Ratio link to EN13215 and ErP (Energy Related Products) 2009/125/CE
Tamb [°C]: Ambient Temperature
Te [°C]: Evaporating Temperature
Q [kW]: Cooling Capacity in Kilo Watt
P [kW]: Power Input in Kilo Watt

Version
A00: Without valves and receiver for capillary tubes
A01: With receiver, 2stop valves, brackets and copper pipes for KP
A04: A01 + KP17 WB + FSA-kit + power cord

Model	Code	Version	Compressor	Electrical code (1)	Tamb [°C]	Cooling capacity Q [kW] (2)								EcoDesign (3)			
						Te [°C]								Q [kW]	P [kW]	COP	SEPR
						-45°C	-40°C	-35°C	-30°C	-25°C	-20°C	-15°C	-10°C				
OP-LCQC012	114X1449	A01	MLY12LAb	G	27			0.334	0.436	0.548	0.670	0.802	0.943				
					32			0.297	0.390	0.493	0.606	0.729	0.862	0.336	0.351	0.96	
					38			0.254	0.335	0.427	0.529	0.642	0.765				
					43			0.219	0.290	0.372	0.465	0.569	0.683				
OP-LCHC015	114X1548 114X1549 114X1551	A00 A01 A04	SC15CL	G	27		0.285	0.389	0.507	0.639	0.788	0.951	1.130				
					32		0.233	0.335	0.449	0.576	0.716	0.870	1.038	0.379	0.468	0.81	
					38			0.265	0.375	0.496	0.627	0.771	0.926				
					43				0.311	0.426	0.551	0.686	0.832				
OP-LCQC012	114X1569	A01	MPT12LA	G	27			0.398	0.512	0.635	0.769	0.912	1.065				
					32			0.354	0.456	0.569	0.692	0.825	0.968	0.401	0.405	0.99	
					38			0.302	0.390	0.490	0.600	0.722					
					43			0.258	0.336	0.425	0.525						
OP-LCQC014	114X1573	A01	MPT14LA	G	27			0.448	0.569	0.700	0.840	0.988	1.144				
					32			0.401	0.511	0.630	0.758	0.896	1.041	0.456	0.478	0.95	
					38			0.345	0.441	0.546	0.661	0.785					
					43			0.299	0.383	0.477	0.580						
OP-LCHC018	114X1556 114X1557 114X1559	A00 A01 A04	SC18CLX	G	27	0.260	0.362	0.486	0.632	0.801	0.991	1.203	1.435				
					32	0.215	0.310	0.423	0.557	0.712	0.886	1.082	1.296	0.478	0.501	0.95	
					38		0.250	0.351	0.470	0.608	0.764	0.939	1.132				
					43			0.294	0.400	0.524	0.664	0.822	0.998				
OP-LCHC021	114X1600 114X1601 114X1602	A00 A01 A04	SC21CL	G	27		0.397	0.537	0.695	0.868	1.057	1.262	1.484				
					32		0.347	0.469	0.608	0.764	0.937	1.127	1.336	0.531	0.548	0.97	
					38		0.282	0.383	0.503	0.641	0.797	0.972	1.168				
					43		0.230	0.316	0.422	0.546	0.690	0.854	1.040				
OP-LCHC026	114X1673	A01	GS26CLX	G	27	0.390	0.542	0.724	0.934	1.172	1.436	1.725	2.035				
					32	0.324	0.464	0.631	0.824	1.043	1.286	1.553	1.840	0.716	0.754	0.95	
					38	0.249	0.375	0.524	0.697	0.892	1.110	1.350	1.609				
					43	0.192	0.306	0.440	0.594	0.770	0.967	1.184	1.420				
OP-LCHC034	114X1781 114X1783	A01 A04	GS34CLX	G	27		0.756	0.998	1.278	1.598	1.956	2.349	2.773				
					32		0.663	0.886	1.146	1.441	1.772	2.136	2.531	1.008	1.009	1.00	
					38		0.553	0.754	0.987	1.253	1.551	1.880	2.238				
					43		0.464	0.645	0.856	1.096	1.366	1.665	1.992				

LBP

(1) E - 400V-3ph-50Hz Compressor & 230V-1ph-50Hz Fan
G - 230V-1ph-50Hz Compressor & 230V-1ph-50Hz Fan

(2) Nominal conditions (EN13215), Evaporating temperatures at dew point, Superheat 10K, Subcooling 0K

(3) Rated conditions (EN13215), Evaporating temperature (dew point) -35°C, Ambient air temperature +32°C, Return Gas Temperature 20°C, Subcooling 0K

COP: Coefficient Of Perfromance link to EN13215 and ErP (Energy related Products) 2009/125/CE
SEPR: Seasonal Energy Performance Ratio link to EN13215 and ErP (Energy Related Products) 2009/125/CE
Tamb [°C]: Ambient Temperature
Te [°C]: Evaporating Temperature
Q [kW]: Cooling Capacity in Kilo Watt
P [kW]: Power Input in Kilo Watt

Version
A00: Without valves and receiver for capillary tubes
A01: With receiver, 2stop valves, brackets and copper pipes for KP
A04: A01 + KP17 WB + FSA-kit + power cord

For regular updates and detailed capacities, please refer to **Coolselector®2** software

Model	Code	Version	Compressor	Electrical code (1)	Tamb [°C]	Cooling capacity Q [kW] (2) Te [°C] -40°C	-35°C	-30°C	-25°C	-20°C	-15°C	-10°C	EcoDesign (3) Q [kW]	P [kW]	COP	SEPR	Sound power level dB(A)	Sound pressure level 10 m dB(A)
OP-LCQN048	114X5758	A02	NTZ048	E	27	0.732	1.054	1.425	1.841	2.298	2.791	3.314						
					32	0.625	0.920	1.258	1.636	2.051	2.497	2.972	1.040	0.951	1.09		73	42
					38	0.498	0.761	1.060	1.393	1.757	2.148	2.565						
					43		0.632	0.899	1.194	1.516	1.862							
					46		0.557	0.804	1.076	1.373	1.692							
OP-LCQN048	114X5759	A02	NTZ048	G	27	0.717	1.036	1.413	1.844	2.323	2.842	3.393						
					32	0.598	0.892	1.237	1.631	2.068	2.543	3.047	1.008	1.06	0.96		73	42
					38	0.457	0.720	1.027	1.377	1.764	2.184	2.631						
					43		0.580	0.855	1.167	1.512	1.887							
					46		0.499	0.754	1.042	1.362	1.709							
OP-LCQN068	114X5761	A02	NTZ068	E	27	1.289	1.749	2.273	2.857	3.496	4.180	4.902						
					32	1.113	1.535	2.015	2.549	3.134	3.761	4.423	1.745	1.671	1.04		71	40
					38	0.921	1.296	1.722	2.196	2.714	3.271	3.859						
					43		1.110	1.491	1.914	2.376	2.872							
					46		1.004	1.358	1.750	2.177	2.636							
OP-LCQN068	114X5762	A02	NTZ068	G	27	1.278	1.705	2.207	2.776	3.405	4.081	4.791						
					32	1.139	1.527	1.980	2.494	3.060	3.668	4.307	1.743	1.79	0.97		71	40
					38	0.971	1.314	1.711	2.157	2.649	3.176	3.731						
					43		1.136	1.486	1.879	2.309	2.769							
					46		1.029	1.352	1.712	2.105	2.525							
OP-LCQN068	114X5762	A02	NTZ068	G	27	1.458	1.984	2.613	3.337	4.144	5.017	5.937						
					32	1.242	1.720	2.290	2.947	3.680	4.475	5.313	1.954	1.946	1.00		82	51
					38	0.986	1.404	1.904	2.481	3.126	3.827	4.567						
					43		1.148	1.588	2.098	2.669	3.292							
					46		0.998	1.402	1.871	2.398	2.973							
OP-LGQN096	114X5766	A02	NTZ096	E	27	1.692	2.360	3.203	4.240	5.486	6.955	8.656						
					32	1.458	2.073	2.850	3.809	4.964	6.330	7.918	2.328	1.924	1.21	1.60	82	51
					38	1.171	1.717	2.411	3.270	4.312	5.552	7.001						
					43		1.419	2.039	2.812	3.757	4.888							
					46		1.243	1.817	2.537	3.421	4.485							

LBP

This table continues on the next page

(1) E - 400V-3ph-50Hz Compressor & 230V-1ph-50Hz Fan
G - 230V-1ph-50Hz Compressor & 230V-1ph-50Hz Fan
(2) Nominal conditions (EN13215), Evaporating temperatures at dew point, Superheat 10K, Subcooling 0K
(3) Rated conditions (EN13215), Evaporating temperature (dew point) -35°C, Ambient air temperature +32°C, Return Gas Temperature 20°C, Subcooling 0K

COP: Coefficient Of Perfromance link to EN13215 and ErP (Energy related Products) 2009/125/CE
SEPR: Seasonal Energy Performance Ratio link to EN13215 and ErP (Energy Related Products) 2009/125/CE
Tamb [°C]: Ambient Temperature
Te [°C]: Evaporating Temperature
Q [kW]: Cooling Capacity in Kilo Watt
P [kW]: Power Input in Kilo Watt

Version
A02: Receiver + Stop valves + KP17WB pressure switch + Electrical box

Model	Code	Version	Compressor	Electrical code (1)	Tamb [°C]	Cooling capacity Q [kW] (2) Te [°C] -40°C	-35°C	-30°C	-25°C	-20°C	-15°C	-10°C	EcoDesign (3) Q [kW]	P [kW]	COP	SEPR	Sound power level dB(A)	Sound pressure level 10 m dB(A)
OP-LCQN108	114X5768	A02	NTZ108	E	27	2.012	2.814	3.792	4.951	6.295	7.823	9.531						
					32	1.729	2.471	3.37	4.434	5.669	7.074	8.648	2.779	2.316	1.20	1.66	78	47
					38	1.394	2.061	2.865	3.814	4.916	6.173	7.587						
					43		1.725	2.448	3.301	4.291	5.424							
					46		1.527	2.2	2.995	3.918	4.976							
OP-LGQN108	114X5769	A02	NTZ108	E	27	2.029	2.841	3.834	5.016	6.391	7.961	9.725						
					32	1.744	2.495	3.409	4.495	5.759	7.204	8.832	2.805	2.247	1.25	1.74	78	47
					38	1.407	2.082	2.900	3.869	4.999	6.294	7.757						
					43		1.744	2.479	3.351	4.367	5.535							
					46		1.544	2.230	3.042	3.990	5.081							
OP-LGQN136	114X5771	A02	NTZ136	E	27	2.601	3.556	4.713	6.081	7.671	9.486	11.528						
					32	2.263	3.144	4.208	5.469	6.935	8.613	10.506	3.544	3.060	1.16	1.70	78	47
					38	1.865	2.655	3.607	4.736	6.053	7.564	9.277						
					43		2.254	3.112	4.129	5.319	6.690							
					46		2.019	2.817	3.767	4.880	6.166							
OP-LCQN136	114X5772	A02	NTZ136	E	27	2.575	3.515	4.649	5.986	7.531	9.288	11.253						
					32	2.239	3.106	4.149	5.379	6.803	8.425	10.245	3.504	3.129	1.12	1.62	78	47
					38	1.845	2.62	3.553	4.654	5.931	7.389	9.032						
					43		2.224	3.062	4.053	5.205	6.526							
					46		1.99	2.771	3.695	4.771	6.008							
OP-LGQN215	114X5774	A02	NTZ215	E	27	4.127	5.649	7.453	9.558	11.979	14.727	17.809						
					32	3.551	4.984	6.675	8.643	10.904	13.471	16.350	5.521	4.910	1.12	1.62	86	55
					38	2.845	4.156	5.698	7.490	9.549	11.887	14.515						
					43		3.456	4.863	6.497	8.377	10.517							
					46		3.037	4.357	5.893	7.661	9.677							
OP-LGQN271	114X5776	A02	NTZ271	E	27	5.495	7.459	9.769	12.430	15.440	18.793	22.476						
					32	4.839	6.659	8.793	11.248	14.027	17.125	20.534	7.403	6.344	1.17	1.62	86	55
					38	4.047	5.684	7.598	9.799	12.294	15.081	18.158						
					43		4.867	6.591	8.575	10.827	13.350							
					46		4.378	5.985	7.836	9.939	12.301							

LBP

(1) E - 400V-3ph-50Hz Compressor & 230V-1ph-50Hz Fan
G - 230V-1ph-50Hz Compressor & 230V-1ph-50Hz Fan

(2) Nominal conditions (EN13215), Evaporating temperatures at dew point, Superheat 10K, Subcooling 0K

(3) Rated conditions (EN13215), Evaporating temperature (dew point) -35°C, Ambient air temperature +32°C, Return Gas Temperature 20°C, Subcooling 0K

COP: Coefficient Of Perfromance link to EN13215 and ErP (Energy related Products) 2009/125/CE
SEPR: Seasonal Energy Performance Ratio link to EN13215 and ErP (Energy Related Products) 2009/125/CE
Tamb [°C]: Ambient Temperature
Te [°C]: Evaporating Temperature
Q [kW]: Cooling Capacity in Kilo Watt
P [kW]: Power Input in Kilo Watt

Version
A02: Receiver + Stop valves + KP17WB pressure switch + Electrical box

For regular updates and detailed capacities, please refer to **Coolselector®2** software

Model	Code	Version	Compressor	Electrical code (1)	Tamb [°C]	Cooling capacity Q [kW] (2)								EcoDesign (3)			
						Te [°C]								Q [kW]	P [kW]	COP	SEPR
						-25°C	-20°C	-15°C	-10°C	-5°C	0°C	5°C	10°C				
OP-MCNC003	114F1202 114F1203 114F1201	A09 A10 A11	NBC30RA	G	27	0.141	0.177	0.218	0.264	0.316	0.372	0.433	0.498				
					32	0.129	0.162	0.200	0.244	0.292	0.346	0.404	0.467	0.250	0.133	1.88	
					38	0.116	0.145	0.180	0.220	0.265	0.315	0.370					
					43	0.105	0.131	0.163	0.199	0.242	0.289						
OP-MCNC004	114F1205 114F1206 114F1204	A09 A10 A11	NLY45RAb	G	27	0.203	0.254	0.311	0.373	0.439	0.510	0.586	0.666				
					32	0.186	0.233	0.286	0.343	0.406	0.474	0.546	0.623	0.354	0.187	1.88	
					38	0.166	0.208	0.256	0.309	0.367	0.430	0.498					
					43	0.149	0.187	0.231	0.280	0.334	0.394						
OP-MCNC006	114F1308 114F1309 114F1307	A09 A10 A11	NLY60RAb	G	27	0.274	0.341	0.416	0.500	0.590	0.689	0.794	0.906				
					32	0.254	0.315	0.385	0.463	0.549	0.642	0.743	0.852	0.476	0.245	1.94	
					38	0.23	0.284	0.347	0.419	0.499	0.586	0.682					
					43	0.21	0.258	0.316	0.382	0.457	0.540						
OP-MCNC008	114F1411 114F1412 114F1410	A09 A10 A11	NLY80RAb	G	27	0.354	0.454	0.566	0.691	0.828	0.977	1.138	1.310				
					32	0.328	0.418	0.522	0.639	0.768	0.910	1.063	1.228	0.656	0.324	2.03	
					38	0.296	0.376	0.469	0.576	0.696	0.829	0.974					
					43	0.269	0.341	0.426	0.524	0.636	0.761						
OP-MCNC009	114F1414 114F1415 114F1413	A09 A10 A11	NLY90RAb	G	27	0.408	0.518	0.641	0.776	0.924	1.084	1.255	1.437				
					32	0.378	0.478	0.592	0.719	0.858	1.009	1.173	1.348	0.739	0.365	2.02	
					38	0.342	0.431	0.533	0.649	0.778	0.920	1.075					
					43	0.312	0.391	0.485	0.592	0.712	0.846						
OP-MCNC011	114F1417 114F1418 114F1416	A09 A10 A11	NLY12RAb	G	27	0.474	0.603	0.743	0.894	1.056	1.228	1.409	1.601				
					32	0.442	0.561	0.691	0.833	0.986	1.149	1.324	1.508	0.858	0.445	1.93	
					38	0.404	0.511	0.630	0.760	0.902	1.056	1.221					
					43	0.372	0.469	0.578	0.699	0.833	0.978						
OP-MCNC014	114F1420 114F1421 114F1419	A09 A10 A11	NPT14RA	G	27	0.687	0.746	0.851	1.003	1.200	1.441	1.728	2.061				
					32	0.652	0.705	0.805	0.950	1.141	1.378	1.660	1.990	0.982	0.590	1.66	
					38	0.609	0.656	0.748	0.887	1.071	1.302	1.579					
					43	0.573	0.614	0.701	0.834	1.013	1.238						
OP-MCNC016	114F1623 114F1624 114F1622	A09 A10 A11	NPT16RA	G	27	0.786	0.859	0.987	1.168	1.402	1.688	2.027	2.418				
					32	0.746	0.813	0.934	1.108	1.335	1.615	1.948	2.335	1.141	0.636	1.79	
					38	0.698	0.757	0.870	1.036	1.255	1.527	1.854					
					43	0.658	0.710	0.816	0.975	1.188	1.454						
OP-MCNC018	114F1626 114F1627 114F1625	A09 A10 A11	NX18TBa	G	27	0.74	0.936	1.160	1.410	1.686	1.985	2.308	2.653				
					32	0.675	0.854	1.062	1.296	1.556	1.841	2.150	2.483	1.334	0.726	1.84	
					38	0.597	0.756	0.944	1.159	1.401	1.669	1.961					
					43	0.533	0.675	0.847	1.046	1.272	1.525						
OP-MCNC020	114F1629 114F1630 114F1628	A09 A10 A11	NX21TBa	G	27	0.85	1.068	1.312	1.581	1.872	2.184	2.517	2.869				
					32	0.775	0.972	1.196	1.445	1.718	2.013	2.330	2.668	1.489	0.829	1.79	
					38	0.684	0.857	1.057	1.283	1.534	1.809	2.107					
						0.61	0.761	0.942	1.149	1.382	1.639						

MBP

(1) E - 400V-3ph-50Hz Compressor & 230V-1ph-50Hz Fan
G - 230V-1ph-50Hz Compressor & 230V-1ph-50Hz Fan

(2) Nominal conditions (EN13215), Evaporating temperatures at dew point, Superheat 10K, Subcooling 0K

(3) Rated conditions (EN13215), Evaporating temperature (dew point) -10°C, Ambient air temperature +32°C, Return Gas Temperature 20°C, Subcooling 0K

COP: Coefficient Of Perfromance link to EN13215 and ErP (Energy related Products) 2009/125/CE
SEPR: Seasonal Energy Performance Ratio link to EN13215 and ErP (Energy Related Products) 2009/125/CE
Tamb [°C]: Ambient Temperature
Te [°C]: Evaporating Temperature
Q [kW]: Cooling Capacity in Kilo Watt
P [kW]: Power Input in Kilo Watt
Version
A09: Tube for KP pressostat + Wired Ebox + Schrader valve
A10: Mini pressure switch + Wired Ebox + Combo Filter drier + Schrader valve
A11: Wired Ebox + Schrader valve

For regular updates and detailed capacities, please refer to **Coolselector®2** software

EcoDesign 2018

Model	Code	Version	Compressor	Electrical code (1)	Tamb [°C]	Cooling capacity Q [kW] (2)									EcoDesign (3)			
						Te [°C]									Q [kW]	P [kW]	COP	SEPR
						-30°C	-25°C	-20°C	-15°C	-10°C	-5°C	0°C	5°C	10°C				
OP-MCGC003	114X0104 114X0105 114X0107	A00 A01 A04	TL3G	G	27	0.050	0.066	0.086	0.110	0.137	0.167	0.200	0.236	0.273				
					32	0.045	0.060	0.079	0.101	0.126	0.154	0.184	0.217	0.251	0.130	0.120	1.08	
					38	0.038	0.052	0.070	0.090	0.112	0.138	0.165	0.194	0.225				
					43	0.032	0.045	0.061	0.080	0.101	0.123	0.148	0.175	0.202				
OP-MCGC004	114X0108 114X0109 114X0111	A00 A01 A04	TL4G	G	27	0.050	0.077	0.106	0.137	0.170	0.205	0.242	0.284	0.329				
					32	0.048	0.071	0.096	0.124	0.154	0.187	0.224	0.264	0.310	0.159	0.159	1.00	
					38	0.042	0.062	0.084	0.109	0.136	0.168	0.204	0.245					
					43	0.037	0.054	0.074	0.097	0.124	0.155	0.190						
OP-MCGC005	114X0112 114X0113 114X0115	A00 A01 A04	TL5G	G	27	0.079	0.102	0.130	0.162	0.198	0.238	0.281	0.328	0.376				
					32	0.071	0.094	0.120	0.150	0.184	0.222	0.263	0.306	0.352	0.190	0.171	1.11	
					38	0.063	0.084	0.108	0.136	0.168	0.203	0.241	0.281	0.323				
					43	0.056	0.076	0.099	0.125	0.155	0.187	0.222	0.260	0.321				
OP-MCGC006	114X0200 114X0201 114X0203	A00 A01 A04	FR6G	G	27	0.110	0.146	0.188	0.238	0.296	0.364	0.441	0.527	0.623				
					32	0.097	0.131	0.172	0.219	0.275	0.340	0.413	0.496	0.588	0.283	0.187	1.51	
					38	0.080	0.113	0.152	0.197	0.250	0.311	0.380	0.458	0.544				
					43	0.067	0.099	0.136	0.179	0.229	0.287	0.352	0.426	0.508				
OP-MCGC006	114X0228	A00	NL6.1MF	G	27			0.197	0.252	0.316	0.388	0.470	0.560	0.657				
					32			0.181	0.233	0.293	0.361	0.438	0.522	0.614	0.301	0.202	1.49	
					38			0.162	0.210	0.265	0.328	0.399	0.477	0.562				
					43			0.146	0.191	0.242	0.301	0.366	0.439	0.519				
OP-MCGC007	114X0216 114X0217 114X0219	A00 A01 A04	FR7.5G	G	27	0.118	0.156	0.202	0.256	0.319	0.392	0.474	0.567	0.669				
					32	0.103	0.140	0.184	0.236	0.296	0.366	0.444	0.532	0.630	0.305	0.213	1.43	
					38	0.087	0.122	0.164	0.213	0.269	0.335	0.408	0.491	0.583				
					43	0.074	0.108	0.148	0.194	0.248	0.309	0.379	0.457	0.543				
OP-MCGC008	114X0224 114X0225 114X0227	A00 A01 A04	FR8.5G	G	27	0.139	0.184	0.239	0.302	0.376	0.458	0.551	0.653	0.765				
					32	0.129	0.171	0.222	0.281	0.350	0.428	0.516	0.613	0.720	0.360	0.248	1.45	
					38	0.112	0.151	0.198	0.253	0.317	0.389	0.472	0.564	0.666				
					43	0.097	0.133	0.177	0.229	0.289	0.358	0.436	0.525	0.623				
OP-MCGC007	114X0244	A00	NL7.3MF	G	27			0.237	0.301	0.374	0.457	0.548	0.648	0.757				
					32			0.218	0.278	0.347	0.424	0.511	0.605	0.708	0.357	0.241	1.48	
					38			0.196	0.251	0.314	0.386	0.466	0.554	0.649				
					43			0.178	0.229	0.288	0.355	0.429	0.511	0.600				
OP-MCGC008	114X0204 114X0205	A00 A01	NL8.4MF	G	27		0.210	0.269	0.339	0.418	0.508	0.606	0.714	0.828				
					32		0.193	0.248	0.314	0.388	0.472	0.565	0.666	0.775	0.400	0.256	1.56	
					38		0.173	0.224	0.284	0.353	0.431	0.516	0.610	0.711				
					43		0.158	0.205	0.261	0.325	0.397	0.477	0.564	0.659				

MBP

This table continues on the next page

(1) E - 400V-3ph-50Hz Compressor & 230V-1ph-50Hz Fan
G - 230V-1ph-50Hz Compressor & 230V-1ph-50Hz Fan
(2) Nominal conditions (EN13215), Evaporating temperatures at dew point, Superheat 10K, Subcooling 0K
(3) Rated conditions (EN13215), Evaporating temperature (dew point) -10°C, Ambient air temperature +32°C, Return Gas Temperature 20°C, Subcooling 0K

COP: Coefficient Of Perfromance link to EN13215 and ErP (Energy related Products) 2009/125/CE
SEPR: Seasonal Energy Performance Ratio link to EN13215 and ErP (Energy Related Products) 2009/125/CE
Tamb [°C]: Ambient Temperature
Te [°C]: Evaporating Temperature
Q [kW]: Cooling Capacity in Kilo Watt
P [kW]: Power Input in Kilo Watt

Version
A00: Without valves and receiver for capillary tubes
A01: With receiver, 2stop valves, brackets and copper pipes for KP
A04: A01 + KP17 WB + FSA-kit + power cord

*R513A is priliminary

For regular updates and detailed capacities, please refer to **Coolselector®2** software

EcoDesign 2018

Model	Code	Version	Compressor	Electrical code (1)	Tamb [°C]	Cooling capacity Q [kW] (2)									EcoDesign (3)			
						Te [°C]									Q [kW]	P [kW]	COP	SEPR
						-30°C	-25°C	-20°C	-15°C	-10°C	-5°C	0°C	5°C	10°C				
OP-MCGC010	114X0223	A04	SC10G	G	27	0.148	0.212	0.284	0.365	0.454	0.551	0.656	0.771	0.896				
					32	0.128	0.186	0.252	0.328	0.413	0.507	0.611	0.725	0.853	0.426	0.303	1.41	
					38	0.102	0.153	0.214	0.286	0.367	0.459	0.563	0.679	0.811				
					43	0.080	0.127	0.185	0.254	0.334	0.425	0.530	0.650					
OP-MCGC008	114X0352	A00	NL8.4MF	G	27			0.278	0.352	0.437	0.533	0.641	0.76	0.889				
					32			0.256	0.325	0.405	0.496	0.598	0.71	0.832	0.417	0.282	1.48	
					38			0.232	0.295	0.369	0.453	0.547	0.651	0.765				
					43			0.212	0.271	0.339	0.417	0.505	0.603	0.71				
OP-MCGC011	114X0336 114X0337 114X0339	A00 A01 A04	FR11G	G	27	0.163	0.241	0.322	0.406	0.499	0.600	0.715	0.844					
					32	0.153	0.223	0.296	0.374	0.460	0.557	0.666	0.793		0.473	0.337	1.41	
					38	0.136	0.198	0.263	0.334	0.414	0.505	0.611	0.734					
					43	0.121	0.177	0.236	0.302	0.377	0.465	0.568	0.690					
OP-MCGC012	114X0340 114X0341 114X0343	A00 A01 A04	SC12G	G	27	0.213	0.281	0.362	0.457	0.566	0.688	0.824	0.972	1.133				
					32	0.185	0.249	0.326	0.416	0.519	0.635	0.764	0.906	1.060	0.535	0.378	1.41	
					38	0.153	0.213	0.284	0.368	0.464	0.572	0.694	0.828	0.974				
					43	0.129	0.185	0.251	0.329	0.419	0.522	0.637	0.764					
OP-MCGC015	114X0448 114X0449 114X0451	A00 A01 A04	SC15G	G	27		0.323	0.427	0.552	0.694	0.854	1.029	1.218	1.418				
					32		0.294	0.397	0.515	0.650	0.800	0.963	1.138	1.323	0.670	0.463	1.45	
					38		0.252	0.353	0.466	0.592	0.730	0.879	1.039	1.207				
					43		0.213	0.312	0.421	0.540	0.669	0.807	0.954	1.109				
OP-MCGC018	114X0556 114X0557 114X0559	A00 A01 A04	SC18G	G	27		0.400	0.515	0.649	0.803	0.978	1.173	1.389	1.624				
					32		0.351	0.465	0.596	0.746	0.915	1.104	1.310	1.532	0.770	0.552	1.40	
					38		0.307	0.417	0.543	0.685	0.844	1.019	1.211	1.415				
					43		0.280	0.384	0.502	0.635	0.783	0.946	1.122					
OP-MCGC021	114X0568	A00	SC21MF	G	27			0.623	0.773	0.945	1.137	1.350	1.583	1.833				
					32			0.578	0.720	0.881	1.063	1.264	1.483	1.720	0.910	0.647	1.410	
					38			0.524	0.655	0.804	0.972	1.159	1.364	1.585				
					43			0.480	0.601	0.740	0.897	1.072	1.263					
OP-MCGC021	114X0564 114X0565 114X0567	A00 A01 A04	SC21G	G	27		0.463	0.601	0.758	0.933	1.125	1.331	1.551	1.783				
					32		0.421	0.550	0.698	0.862	1.042	1.235	1.441	1.658	0.890	0.631	1.410	
					38		0.375	0.491	0.624	0.773	0.936	1.112	1.300	1.499				
					43		0.337	0.440	0.559	0.694	0.842	1.003	1.176	1.359				
OP-MCGC026	114X0773	A01	GS26MFX	G	27			0.873	1.125	1.416	1.745	2.113	2.519					
					32			0.809	1.045	1.317	1.625	1.970	2.350		1.352	0.766	1.77	
					38			0.736	0.953	1.202	1.485	1.801	2.151					
					43			0.675	0.877	1.108	1.369	1.662	1.986					
OP-MCGC034	114X0781	A01	GS34MFX	G	27			1.138	1.432	1.772	2.158	2.592	3.072					
					32			1.051	1.330	1.652	2.018	2.429	2.886		1.699	0.982	1.73	
					38			0.946	1.207	1.507	1.848	2.232	2.660					
					43			0.858	1.103	1.385	1.706	2.067	2.470					

MBP

(1) E - 400V-3ph-50Hz Compressor & 230V-1ph-50Hz Fan
G - 230V-1ph-50Hz Compressor & 230V-1ph-50Hz Fan

(2) Nominal conditions (EN13215), Evaporating temperatures at dew point, Superheat 10K, Subcooling 0K

(3) Rated conditions (EN13215), Evaporating temperature (dew point) -10°C, Ambient air temperature +32°C, Return Gas Temperature 20°C, Subcooling 0K

COP: Coefficient Of Perfromance link to EN13215 and ErP (Energy related Products) 2009/125/CE
SEPR: Seasonal Energy Performance Ratio link to EN13215 and ErP (Energy Related Products) 2009/125/CE
Tamb [°C]: Ambient Temperature
Te [°C]: Evaporating Temperature
Q [kW]: Cooling Capacity in Kilo Watt
P [kW]: Power Input in Kilo Watt

Version
A00: Without valves and receiver for capillary tubes
A01: With receiver, 2stop valves, brackets and copper pipes for KP
A04: A01 + KP17 WB + FSA-kit + power cord

*R513A is priliminary

For regular updates and detailed capacities, please refer to **Coolselector®2** software

EcoDesign 2018

Model	Code	Version	Compressor	Electrical code (1)	Tamb [°C]	Cooling capacity Q [kW] (2) Te [°C] -20°C	-15°C	-10°C	-5°C	0°C	5°C	10°C	15°C	EcoDesign (3) Q [kW]	P [kW]	COP	SEPR	Sound power level dB(A)	Sound pressure level 10 m dB(A)
OP-MCRN030	114X5721	A02	MTZ018	E	27	0.739	1.058	1.445	1.902	2.433	3.036	3.710	4.453						
					32	0.616	0.923	1.292	1.726	2.226	2.793	3.426	4.123	1.322	0.727	1.82		76	45
					38	0.490	0.779	1.122	1.523	1.984	2.504	3.085							
					43	0.405	0.675	0.993	1.363	1.787	2.267	2.800							
					46	0.363	0.620	0.921	1.272	1.673	2.126	2.630							
OP-MCRN030	114X5722	A02	MTZ018	G	27	0.739	1.058	1.445	1.902	2.433	3.036	3.710	4.453						
					32	0.616	0.923	1.292	1.726	2.226	2.793	3.426	4.123	1.322	0.727	1.82		76	45
					38	0.490	0.779	1.122	1.523	1.984	2.504	3.085							
					43	0.405	0.675	0.993	1.363	1.787	2.267	2.800							
					46	0.363	0.620	0.921	1.272	1.673	2.126	2.630							
OP-MCRN038	114X5724	A02	MTZ022	E	27	0.947	1.325	1.789	2.343	2.989	3.726	4.552	5.460						
					32	0.815	1.179	1.620	2.145	2.754	3.447	4.223	5.076	1.659	0.856	1.94		74	43
					38	0.676	1.017	1.427	1.912	2.473	3.111	3.824							
					43	0.578	0.896	1.277	1.725	2.243	2.832	3.491							
					46	0.528	0.830	1.192	1.616	2.108	2.666	3.292							
OP-MCRN038	114X5723	A02	MTZ022	G	27	0.947	1.325	1.789	2.343	2.989	3.726	4.552	5.460						
					32	0.815	1.179	1.620	2.145	2.754	3.447	4.223	5.076	1.659	0.856	1.94		74	43
					38	0.676	1.017	1.427	1.912	2.473	3.111	3.824							
					43	0.578	0.896	1.277	1.725	2.243	2.832	3.491							
					46	0.528	0.830	1.192	1.616	2.108	2.666	3.292							
OP-MCRN048	114X5726	A02	MTZ028	E	27	1.226	1.653	2.200	2.879	3.697	4.660	5.767	7.016						
					32	1.085	1.494	2.014	2.656	3.429	4.337	5.382	6.559	2.062	1.114	1.85		74	43
					38	0.942	1.323	1.804	2.397	3.110	3.948	4.913							
					43	0.848	1.199	1.643	2.190	2.848	3.623	4.518							
					46	0.802	1.134	1.552	2.069	2.693	3.429	4.279							
OP-MCRN048	114X5728	A02	MTZ028	G	27	1.226	1.653	2.200	2.879	3.697	4.660	5.767	7.016						
					32	1.085	1.494	2.014	2.656	3.429	4.337	5.382	6.559	2.062	1.114	1.85		74	43
					38	0.942	1.323	1.804	2.397	3.110	3.948	4.913							
					43	0.848	1.199	1.643	2.190	2.848	3.623	4.518							
					46	0.802	1.134	1.552	2.069	2.693	3.429	4.279							
OP-MCRN054	114X5729	A02	MTZ032	E	27	1.409	1.919	2.558	3.337	4.261	5.334	6.554	7.916						
					32	1.243	1.732	2.341	3.079	3.952	4.965	6.116	7.400	2.398	1.353	1.77		74	43
					38	1.064	1.523	2.088	2.772	3.580	4.516	5.581							
					43	0.935	1.362	1.887	2.521	3.270	4.139	5.128							
					46	0.867	1.273	1.772	2.373	3.086	3.913	4.855							
OP-MCRN054	114X5731	A02	MTZ032	G	27	1.409	1.919	2.558	3.337	4.261	5.334	6.554	7.916						
					32	1.243	1.732	2.341	3.079	3.952	4.965	6.116	7.400	2.398	1.353	1.77		74	43
					38	1.064	1.523	2.088	2.772	3.580	4.516	5.581							
					43	0.935	1.362	1.887	2.521	3.270	4.139	5.128							
					46	0.867	1.273	1.772	2.373	3.086	3.913	4.855							

This table continues on the next page

MBP

(1) E - 400V-3ph-50Hz Compressor & 230V-1ph-50Hz Fan
G - 230V-1ph-50Hz Compressor & 230V-1ph-50Hz Fan

(2) Nominal conditions (EN13215), Evaporating temperatures at dew point, Superheat 10K, Subcooling 0K

(3) Rated conditions (EN13215), Evaporating temperature (dew point) -10°C, Ambient air temperature +32°C, Return Gas Temperature 20°C, Subcooling 0K

COP: Coefficient Of Perfromance link to EN13215 and ErP (Energy related Products) 2009/125/CE
SEPR: Seasonal Energy Performance Ratio link to EN13215 and ErP (Energy Related Products) 2009/125/CE
Tamb [°C]: Ambient Temperature
Te [°C]: Evaporating Temperature
Q [kW]: Cooling Capacity in Kilo Watt
P [kW]: Power Input in Kilo Watt

Version
A02: Receiver + Stop valves + KP17WB pressure switch + Electrical box

*R513A is priliminary

For regular updates and detailed capacities, please refer to **Coolselector®2** software

Model	Code	Version	Compressor	Electrical code (1)	Tamb [°C]	Cooling capacity Q [kW] (2) Te [°C] -20°C	-15°C	-10°C	-5°C	0°C	5°C	10°C	15°C	EcoDesign (3) Q [kW]	P [kW]	COP	SEPR	Sound power level dB(A)	Sound pressure level 10 m dB(A)
OP-MCRN060	114X5732	A02	MTZ036	E	27	1.929	2.522	3.237	4.079	5.052	6.154	7.382	8.729						
					32	1.758	2.330	3.014	3.815	4.736	5.778	6.937	8.207	3.092	1.607	1.92		74	43
					38	1.564	2.105	2.745	3.491	4.347	5.312	6.385							
					43	1.413	1.921	2.521	3.217	4.014	4.913	5.911							
					46	1.326	1.814	2.387	3.051	3.811	4.668	5.620							
OP-MCRN060	114X5734	A02	MTZ036	G	27	1.929	2.522	3.237	4.079	5.052	6.154	7.382	8.729						
					32	1.758	2.330	3.014	3.815	4.736	5.778	6.937	8.207	3.092	1.607	1.92		74	43
					38	1.564	2.105	2.745	3.491	4.347	5.312	6.385							
					43	1.413	1.921	2.521	3.217	4.014	4.913	5.911							
					46	1.326	1.814	2.387	3.051	3.811	4.668	5.620							
OP-MCRN068	114X5735	A02	MTZ040	E	27	2.276	2.905	3.641	4.489	5.451	6.528	7.718	9.016						
					32	2.115	2.724	3.432	4.244	5.161	6.185	7.313	8.542	3.522	1.739	2.03		76	45
					38	1.921	2.501	3.170	3.933	4.792	5.747	6.798							
					43	1.757	2.308	2.941	3.659	4.466	5.362	6.345							
					46	1.657	2.189	2.798	3.488	4.262	5.120	6.063							
OP-MCRN086	114X5737	A02	MTZ050	E	27	2.419	3.336	4.466	5.826	7.427	9.275	11.373	13.719						
					32	2.133	2.991	4.047	5.317	6.815	8.549	10.524	12.740	4.141	1.946	2.13		84	53
					38	1.811	2.606	3.578	4.745	6.124	7.725	9.555							
					43	1.554	2.303	3.211	4.298	5.582	7.075	8.786							
					46	1.403	2.128	3.000	4.041	5.270	6.700	8.341							
OP-MCRN096	114X5739	A02	MTZ056	E	27	2.290	3.285	4.514	5.997	7.744	9.765	12.065	14.643						
					32	1.999	2.935	4.093	5.492	7.145	9.063	11.249	13.706	4.188	2.052	2.04		83	52
					38	1.680	2.541	3.611	4.908	6.447	8.237	10.286							
					43	1.442	2.240	3.234	4.444	5.885	7.567	9.499							
					46	1.313	2.072	3.020	4.176	5.557	7.174	9.036							
OP-MCRN108	114X5740	A02	MTZ064	E	27	2.591	3.749	5.162	6.842	8.796	11.023	13.518	16.273						
					32	2.278	3.385	4.727	6.319	8.167	10.273	12.635	15.245	4.840	2.312	2.09		83	52
					38	1.910	2.956	4.214	5.700	7.422	9.385	11.587							
					43	1.611	2.607	3.796	5.194	6.812	8.654	10.724							
					46	1.435	2.402	3.550	4.895	6.450	8.221	10.211							
OP-MGRN108	114X5743	A02	MTZ064	E	27	2.591	3.749	5.162	6.842	8.796	11.023	13.518	16.273						
					32	2.278	3.385	4.727	6.319	8.167	10.273	12.635	15.245	4.840	2.242	2.16		83	52
					38	1.910	2.956	4.214	5.700	7.422	9.385	11.587							
					43	1.611	2.607	3.796	5.194	6.812	8.654	10.724							
					46	1.435	2.402	3.550	4.895	6.450	8.221	10.211							

MBP

This table continues on the next page

(1) E - 400V-3ph-50Hz Compressor & 230V-1ph-50Hz Fan
G - 230V-1ph-50Hz Compressor & 230V-1ph-50Hz Fan
(2) Nominal conditions (EN13215), Evaporating temperatures at dew point, Superheat 10K, Subcooling 0K
(3) Rated conditions (EN13215), Evaporating temperature (dew point) -10°C, Ambient air temperature +32°C, Return Gas Temperature 20°C, Subcooling 0K

COP: Coefficient Of Perfromance link to EN13215 and ErP (Energy related Products) 2009/125/CE
SEPR: Seasonal Energy Performance Ratio link to EN13215 and ErP (Energy Related Products) 2009/125/CE
Tamb [°C]: Ambient Temperature
Te [°C]: Evaporating Temperature
Q [kW]: Cooling Capacity in Kilo Watt
P [kW]: Power Input in Kilo Watt

Version
A02: Receiver + Stop valves + KP17WB pressure switch + Electrical box

*R513A is priliminary

For regular updates and detailed capacities, please refer to **Coolselector®2** software

Model	Code	Version	Compressor	Electrical code (1)	Tamb [°C]	Cooling capacity Q [kW] (2) Te [°C] -20°C	-15°C	-10°C	-5°C	0°C	5°C	10°C	15°C	EcoDesign (3) Q [kW]	P [kW]	COP	SEPR	Sound power level dB(A)	Sound pressure level 10 m dB(A)
OP-MCRN121	114X5744	A02	MTZ072	E	27	2.984	4.234	5.762	7.582	9.704	12.130	14.854	17.865						
					32	2.667	3.873	5.334	7.069	9.087	11.390	13.976	16.835	5.466	2.625	2.08	2.71	82	51
					38	2.280	3.427	4.805	6.434	8.323	10.477	12.896							
					43	1.958	3.052	4.357	5.894	7.673	9.701	11.978							
					46	1.768	2.828	4.088	5.567	7.279	9.230	11.422							
OP-MGRN121	114X5746	A02	MTZ072	E	27	2.984	4.234	5.762	7.582	9.704	12.130	14.854	17.865						
					32	2.667	3.873	5.334	7.069	9.087	11.390	13.976	16.835	5.466	2.555	2.14	2.80	82	51
					38	2.280	3.427	4.805	6.434	8.323	10.477	12.896							
					43	1.958	3.052	4.357	5.894	7.673	9.701	11.978							
					46	1.768	2.828	4.088	5.567	7.279	9.230	11.422							
OP-MCRN136	114X5747	A02	MTZ080	E	27	4.068	5.496	7.259	9.393	11.929	14.891	18.299	22.163						
					32	3.693	5.062	6.742	8.770	11.178	13.990	17.227	20.903	6.897	2.991	2.31	2.55	82	51
					38	3.238	4.533	6.111	8.008	10.259	12.890	15.921							
					43	2.858	4.089	5.579	7.366	9.484	11.961	14.820							
					46	2.632	3.823	5.259	6.979	9.016	11.401	14.155							
OP-MGRN136	114X5749	A02	MTZ080	E	27	3.895	5.241	6.877	8.822	11.086	13.670	16.567	19.764						
					32	3.530	4.817	6.373	8.216	10.359	12.805	15.548	18.578	6.535	2.976	2.20	2.55	82	51
					38	3.087	4.303	5.760	7.480	9.476	11.755	14.314							
					43	2.720	3.873	5.246	6.862	8.736	10.875	13.281							
					46	2.501	3.616	4.939	6.491	8.291	10.346	12.659							
OP-MGRN171	114X5750	A02	MTZ100	E	27	4.814	6.493	8.569	11.082	14.059	17.523	21.488	25.959						
					32	4.209	5.830	7.821	10.219	13.054	16.346	20.112	24.356	8.004	4.202	1.90	2.68	87	56
					38	3.572	5.105	6.974	9.217	11.862	14.933	18.444							
					43	3.124	4.566	6.317	8.414	10.887	13.759	17.045							
					46	2.893	4.273	5.946	7.949	10.312	13.059	16.205							
OP-MGRN215	114X5753	A02	MTZ125	E	27	6.141	8.185	10.674	13.642	17.113	21.104	25.620	30.657						
					32	5.365	7.344	9.736	12.574	15.884	19.681	23.972	28.754	9.969	4.796	2.08	2.91	86	55
					38	4.513	6.393	8.648	11.311	14.409	17.957	21.962							
					43	3.872	5.651	7.775	10.277	13.183	16.509	20.265							
					46	3.520	5.231	7.269	9.667	12.450	15.638	19.238							
OP-MGRN242	114X5754	A02	MTZ144	E	27	7.721	10.141	13.051	16.481	20.447	24.955	29.996	35.552						
					32	6.930	9.267	12.058	15.330	19.102	23.380	28.156	33.416	12.360	5.939	2.08	2.76	85	54
					38	6.038	8.254	10.879	13.943	17.464	21.449	25.895							
					43	5.352	7.446	9.916	12.789	16.086	19.814	23.973							
					46	4.968	6.981	9.349	12.101	15.256	18.825	22.807							
OP-MGRN271	114X5757	A02	MTZ160	E	27	8.459	11.058	14.200	17.910	22.199	27.060	32.471	38.394						
					32	7.616	10.124	13.129	16.658	20.720	25.311	30.411	35.988	13.465	6.393	2.11	2.79	84	53
					38	6.709	9.074	11.884	15.165	18.928	23.171	27.879							
					43	6.033	8.253	10.874	13.924	17.416	21.351	25.716							
					46	5.661	7.781	10.278	13.180	16.500	20.242	24.394							

MBP

(1) E - 400V-3ph-50Hz Compressor & 230V-1ph-50Hz Fan
G - 230V-1ph-50Hz Compressor & 230V-1ph-50Hz Fan

(2) Nominal conditions (EN13215), Evaporating temperatures at dew point, Superheat 10K, Subcooling 0K

(3) Rated conditions (EN13215), Evaporating temperature (dew point) -10°C, Ambient air temperature +32°C, Return Gas Temperature 20°C, Subcooling 0K

COP: Coefficient Of Perfromance link to EN13215 and ErP (Energy related Products) 2009/125/CE
SEPR: Seasonal Energy Performance Ratio link to EN13215 and ErP (Energy Related Products) 2009/125/CE
Tamb [°C]: Ambient Temperature
Te [°C]: Evaporating Temperature
Q [kW]: Cooling Capacity in Kilo Watt
P [kW]: Power Input in Kilo Watt

Version
A02: Receiver + Stop valves + KP17WB pressure switch + Electrical box

*R513A is priliminary

For regular updates and detailed capacities, please refer to **Coolselector®2** software

Model	Code	Version	Compressor	Electrical code (1)	Tamb [°C]	Cooling capacity Q [kW] (2)								EcoDesign (3)				Sound power level dB(A)	Sound pressure level 10 m dB(A)
						Te [°C]								Q [kW]	P [kW]	COP	SEPR		
						-25°C	-20°C	-15°C	-10°C	-5°C	0°C	5°C	10°C						
OP-MCRN030	114X5721	A02	MTZ018	E	27	0.918	1.309	1.764	2.282	2.863	3.506	4.206	4.962						
					32	0.786	1.151	1.575	2.060	2.603	3.205	3.862	4.573	2.094	1.084	1.93		76	45
					38	0.639	0.973	1.361	1.804	2.302	2.855	3.461	4.117						
					43		0.834	1.192	1.601	2.061	2.573								
					46		0.755	1.095	1.483	1.921	2.408								
OP-MCRN030	114X5722	A02	MTZ018	G	27	0.921	1.338	1.826	2.386	3.018	3.719	4.488	5.318						
					32	0.790	1.185	1.646	2.174	2.768	3.428	4.151	4.933	2.212	1.139	1.94		76	45
					38	0.626	0.994	1.422	1.910	2.460	3.071	3.740	4.464						
					43		0.831	1.230	1.686	2.198	2.767								
					46		0.732	1.114	1.549	2.039	2.584								
OP-MCRN038	114X5724	A02	MTZ022	E	27	1.403	1.824	2.328	2.918	3.593	4.349	5.179	6.074						
					32	1.284	1.673	2.137	2.680	3.302	4.001	4.771	5.606	2.733	1.418	1.93		74	43
					38	1.142	1.495	1.913	2.401	2.961	3.592	4.291	5.051						
					43		1.348	1.729	2.172	2.681	3.257	3.896							
					46		1.260	1.619	2.036	2.515	3.057								
OP-MCRN038	114X5723	A02	MTZ022	G	27	1.223	1.772	2.406	3.120	3.909	4.767	5.684	6.653						
					32	1.046	1.565	2.162	2.832	3.573	4.377	5.238	6.148	2.888	1.479	1.95		74	43
					38	0.826	1.309	1.862	2.481	3.163	3.905	4.699	5.539						
					43		1.092	1.608	2.184	2.819	3.509								
					46		0.961	1.455	2.006	2.612	3.271								
OP-MCRN048	114X5726	A02	MTZ028	E	27	1.808	2.372	3.062	3.890	4.861	5.979	7.242	8.648						
					32	1.656	2.177	2.812	3.574	4.471	5.506	6.680	7.992	3.632	1.737	2.09		74	43
					38	1.478	1.950	2.522	3.208	4.016	4.953	6.022	7.221						
					43		1.764	2.286	2.910	3.647	4.504	5.485							
					46		1.653	2.146	2.735	3.429	4.239								
OP-MCRN048	114X5728	A02	MTZ028	G	27	1.911	2.590	3.382	4.291	5.319	6.465	7.727	9.100						
					32	1.724	2.366	3.113	3.969	4.936	6.014	7.201	8.494	4.036	1.871	2.16		74	43
					38	1.500	2.097	2.788	3.579	4.471	5.466	6.564	7.761						
					43		1.873	2.517	3.252	4.081	5.007								
					46		1.738	2.354	3.055	3.847	4.730								
OP-MCRN054	114X5729	A02	MTZ032	E	27	2.119	2.753	3.517	4.419	5.467	6.663	8.004	9.486						
					32	1.923	2.515	3.224	4.062	5.035	6.147	7.397	8.780	4.130	1.938	2.13		74	43
					38	1.681	2.222	2.866	3.626	4.509	5.521	6.662	7.929						
					43		1.974	2.564	3.259	4.067	4.996								
					46		1.825	2.382	3.037	3.801	4.679								
OP-MCRN054	114X5731	A02	MTZ032	G	27	1.998	2.664	3.432	4.308	5.296	6.397	7.611	8.935						
					32	1.796	2.435	3.166	3.996	4.930	5.968	7.113	8.363	4.065	2.042	1.99		74	43
					38	1.543	2.147	2.832	3.606	4.474	5.438	6.500	7.660						
					43		1.898	2.545	3.271	4.083	4.985								
					46		1.746	2.369	3.066	3.845	4.709								

MBP

This table continues on the next page

(1) E - 400V-3ph-50Hz Compressor & 230V-1ph-50Hz Fan
G - 230V-1ph-50Hz Compressor & 230V-1ph-50Hz Fan
(2) Nominal conditions (EN13215), Evaporating temperatures at dew point, Superheat 10K, Subcooling 0K
(3) Rated conditions (EN13215), Evaporating temperature (dew point) -10°C, Ambient air temperature +32°C, Return Gas Temperature 20°C, Subcooling 0K

COP: Coefficient Of Perfromance link to EN13215 and ErP (Energy related Products) 2009/125/CE
SEPR: Seasonal Energy Performance Ratio link to EN13215 and ErP (Energy Related Products) 2009/125/CE
Tamb [°C]: Ambient Temperature
Te [°C]: Evaporating Temperature
Q [kW]: Cooling Capacity in Kilo Watt
P [kW]: Power Input in Kilo Watt

Version
A02: Receiver + Stop valves + KP17WB pressure switch + Electrical box

For regular updates and detailed capacities, please refer to **Coolselector®2** software

Model	Code	Version	Compressor	Electrical code (1)	Tamb [°C]	Cooling capacity Q [kW] (2)								EcoDesign (3)				Sound power level dB(A)	Sound pressure level 10 m dB(A)
						Te [°C]								Q [kW]	P [kW]	COP	SEPR		
						-25°C	-20°C	-15°C	-10°C	-5°C	0°C	5°C	10°C						
OP-MCRN060	114X5732	A02	MTZ036	E	27	2.268	3.025	3.923	4.960	4.655	7.448	8.885	10.438						
					32	2.067	2.774	3.609	4.575	5.671	6.893	8.235	9.687	4.657	2.375	1.96		74	43
					38	1.831	2.475	3.234	4.113	5.111	6.226	7.453	8.785						
					43		2.227	2.923	3.729	4.645	5.670								
					46		2.080	2.738	3.499	4.365	5.337								
OP-MCRN060	114X5734	A02	MTZ036	G	27	2.281	3.038	3.909	4.896	6.002	7.225	8.564	10.013						
					32	2.047	2.771	3.599	4.533	5.578	6.732	7.995	9.361	4.615	2.417	1.91		74	43
					38	1.756	2.439	3.213	4.083	5.054	6.125	7.295	8.563						
					43		2.153	2.882	3.698	4.606	5.607								
					46		1.980	2.681	3.464	4.334	5.292								
OP-MCRN068	114X5735	A02	MTZ040	E	27	2.599	3.482	4.523	5.725	7.083	8.594	10.248	12.035						
					32	2.362	3.185	4.155	5.274	6.540	7.951	9.497	11.170	5.368	2.740	1.96	2.79	76	45
					38	2.087	2.834	3.716	4.734	5.888	7.176	8.592	10.126						
					43		2.548	3.354	4.286	5.346	6.530								
					46		2.380	3.139	4.019	5.020	6.143								
OP-MCRN086	114X5737	A02	MTZ050	E	27	2.909	4.000	5.313	6.858	8.638	10.652	12.894	15.353						
					32	2.623	3.647	4.874	6.315	7.977	9.860	11.958	14.265	6.422	2.970	2.16	3.19	84	53
					38	2.271	3.212	4.336	5.653	7.173	8.898	10.826	12.951						
					43		2.843	3.880	5.095	6.497	8.091								
					46		2.619	3.604	4.757	6.088	7.604								
OP-MCRN096	114X5739	A02	MTZ056	E	27	3.205	4.401	5.835	7.515	9.442	11.611	14.012	16.628						
					32	2.891	4.012	5.350	6.916	8.712	10.736	12.979	15.429	7.037	3.270	2.15	3.16	83	52
					38	2.502	3.534	4.758	6.187	7.827	9.678	11.734	13.986						
					43		3.127	4.257	5.573	7.084	8.791								
					46		2.880	3.953	5.202	6.635	8.257								
OP-MCRN108	114X5740	A02	MTZ064	E	27	3.849	5.190	6.762	8.566	10.599	12.851	15.312	17.964						
					32	3.427	4.679	6.147	7.834	9.737	11.850	14.162	16.659	7.978	3.754	2.13	3.01	83	52
					38	2.941	4.084	5.425	6.970	8.716	10.660	12.793	15.101						
					43		3.605	4.839	6.263	7.877	9.678								
					46		3.326	4.494	5.845	7.379	9.094								
OP-MGRN108	114X5743	A02	MTZ064	E	27	3.849	5.190	6.762	8.566	10.599	12.851	15.312	17.964						
					32	3.427	4.679	6.147	7.834	9.737	11.850	14.162	16.659	7.978	3.684	2.17	3.08	83	52
					38	2.941	4.084	5.425	6.970	8.716	10.660	12.793	15.101						
					43		3.605	4.839	6.263	7.877	9.678								
					46		3.326	4.494	5.845	7.379	9.094								

MBP

This table continues on the next page

(1) E - 400V-3ph-50Hz Compressor & 230V-1ph-50Hz Fan
G - 230V-1ph-50Hz Compressor & 230V-1ph-50Hz Fan
(2) Nominal conditions (EN13215), Evaporating temperatures at dew point, Superheat 10K, Subcooling 0K
(3) Rated conditions (EN13215), Evaporating temperature (dew point) -10°C, Ambient air temperature +32°C, Return Gas Temperature 20°C, Subcooling 0K

COP: Coefficient Of Perfromance link to EN13215 and ErP (Energy related Products) 2009/125/CE
SEPR: Seasonal Energy Performance Ratio link to EN13215 and ErP (Energy Related Products) 2009/125/CE
Tamb [°C]: Ambient Temperature
Te [°C]: Evaporating Temperature
Q [kW]: Cooling Capacity in Kilo Watt
P [kW]: Power Input in Kilo Watt

Version
A02: Receiver + Stop valves + KP17WB pressure switch + Electrical box

For regular updates and detailed capacities, please refer to **Coolselector®2** software

Model	Code	Version	Compressor	Electrical code (1)	Tamb [°C]	Cooling capacity Q [kW] (2)								EcoDesign (3)				Sound power level dB(A)	Sound pressure level 10 m dB(A)
						Te [°C]								Q [kW]	P [kW]	COP	SEPR		
						-25°C	-20°C	-15°C	-10°C	-5°C	0°C	5°C	10°C						
OP-MCRN121	114X5744	A02	MTZ072	E	27	4.353	5.852	7.600	9.594	11.823	14.275	16.932	19.771						
					32	3.875	5.274	6.906	8.768	10.855	13.153	15.647	18.317	8.939	4.364	2.05	2.89	82	51
					38	3.324	4.602	6.092	7.795	9.708	11.820	14.117	16.583						
					43		4.061	5.431	7.000	8.766	10.721								
					46		3.745	5.042	6.530	8.207	10.067								
OP-MGRN121	114X5746	A02	MTZ072	E	27	4.353	5.852	7.600	9.594	11.823	14.275	16.932	19.771						
					32	3.875	5.274	6.906	8.768	10.855	13.153	15.647	18.317	8.939	4.294	2.08	2.95	82	51
					38	3.324	4.602	6.092	7.795	9.708	11.820	14.117	16.583						
					43		4.061	5.431	7.000	8.766	10.721								
					46		3.745	5.042	6.530	8.207	10.067								
OP-MCRN136	114X5747	A02	MTZ080	E	27	5.265	6.880	8.748	10.863	13.211	15.773	18.522	21.432						
					32	4.779	6.290	8.034	10.007	12.198	14.589	17.159	19.882	10.221	5.194	1.97	2.74	82	51
					38	4.198	5.580	7.173	8.974	10.974	13.161	15.515	18.013						
					43		4.991	6.454	8.109	9.950	11.965								
					46		4.639	6.024	7.590	9.334	11.246								
OP-MGRN136	114X5749	A02	MTZ080	E	27	5.265	6.880	8.748	10.863	13.211	15.773	18.522	21.432						
					32	4.779	6.290	8.034	10.007	12.198	14.589	17.159	19.882	10.221	5.124	1.99	2.78	82	51
					38	4.198	5.580	7.173	8.974	10.974	13.161	15.515	18.013						
					43		4.991	6.454	8.109	9.950	11.965								
					46		4.639	6.024	7.590	9.334	11.246								
OP-MGRN171	114X5750	A02	MTZ100	E	27	6.111	8.292	10.912	13.990	17.536	21.552	26.030	30.956						
					32	5.463	7.486	9.918	12.781	16.087	19.841	24.039	28.670	12.988	6.306	2.06	3.01	87	56
					38	4.717	6.555	8.764	11.370	14.390	17.831	21.693	25.970						
					43		5.806	7.832	10.226	13.008	16.189								
					46		5.369	7.285	9.553	12.193	15.218								
OP-MGRN215	114X5753	A02	MTZ125	E	27	8.003	10.804	14.133	17.999	22.397	27.312	32.717	38.581						
					32	7.154	9.756	12.850	16.450	20.555	25.153	30.224	35.738	16.745	8.020	2.09	2.99	86	55
					38	6.176	8.538	11.351	14.630	18.382	22.600	27.268	32.362						
					43		7.557	10.134	13.147	16.604	20.504								
					46		6.983	9.419	12.271	15.551	19.261								
OP-MGRN242	114X5754	A02	MTZ144	E	27	9.911	12.849	16.247	20.108	24.420	29.164	34.312	39.831						
					32	8.913	11.656	14.827	18.433	22.467	26.914	31.751	36.945	18.785	9.244	2.03	2.86	85	54
					38	7.769	10.282	13.183	16.484	20.185	24.275	28.734	33.538						
					43		9.180	11.859	14.908	18.331	22.123								
					46		8.535	11.083	13.982	17.239	20.851								
OP-MGRN271	114X5757	A02	MTZ160	E	27	11.163	14.432	18.191	22.434	27.139	32.278	37.811	43.693						
					32	10.041	13.095	16.602	20.563	24.962	29.774	34.965	40.493	20.980	10.582	1.98	2.74	84	53
					38	8.751	11.551	14.762	18.387	22.418	26.837	31.615	36.716						
					43		10.309	13.277	16.625	20.352	24.443								
					46		9.581	12.405	15.589	19.133	23.028								

MBP

(1) E - 400V-3ph-50Hz Compressor & 230V-1ph-50Hz Fan
G - 230V-1ph-50Hz Compressor & 230V-1ph-50Hz Fan

(2) Nominal conditions (EN13215), Evaporating temperatures at dew point, Superheat 10K, Subcooling 0K

(3) Rated conditions (EN13215), Evaporating temperature (dew point) -10°C, Ambient air temperature +32°C, Return Gas Temperature 20°C, Subcooling 0K

COP: Coefficient Of Perfromance link to EN13215 and ErP (Energy related Products) 2009/125/CE
SEPR: Seasonal Energy Performance Ratio link to EN13215 and ErP (Energy Related Products) 2009/125/CE
Tamb [°C]: Ambient Temperature
Te [°C]: Evaporating Temperature
Q [kW]: Cooling Capacity in Kilo Watt
P [kW]: Power Input in Kilo Watt

Version
A02: Receiver + Stop valves + KP17WB pressure switch + Electrical box

For regular updates and detailed capacities, please refer to **Coolselector®2** software

Model	Code	Version	Compressor	Electrical code (1)	Tamb [°C]	Cooling capacity Q [kW] (2)								EcoDesign (3)				Sound power level dB(A)	Sound pressure level 10 m dB(A)
						Te [°C]								Q [kW]	P [kW]	COP	SEPR		
						-25°C	-20°C	-15°C	-10°C	-5°C	0°C	5°C	10°C						
OP-MCRN030	114X5721	A02	MTZ018	E	27	0.918	1.309	1.764	2.282	2.863	3.506	4.206	4.962						
					32	0.786	1.151	1.575	2.060	2.603	3.205	3.862	4.573	2.097	1.084	1.93		76	45
					38	0.639	0.973	1.361	1.804	2.302	2.855	3.461	4.117						
					43		0.834	1.192	1.601	2.061	2.573								
					46		0.755	1.095	1.483	1.921	2.408								
OP-MCRN030	114X5722	A02	MTZ018	G	27	0.921	1.338	1.826	2.386	3.018	3.719	4.488	5.318						
					32	0.790	1.185	1.646	2.174	2.768	3.428	4.151	4.933	2.215	1.139	1.95		76	45
					38	0.626	0.994	1.422	1.910	2.460	3.071	3.740	4.464						
					43		0.831	1.230	1.686	2.198	2.767								
					46		0.732	1.114	1.549	2.039	2.584								
OP-MCRN038	114X5724	A02	MTZ022	E	27	1.403	1.824	2.328	2.918	3.593	4.349	5.178	6.074						
					32	1.284	1.673	2.137	2.680	3.302	4.001	4.771	5.606	2.737	1.418	1.93		74	43
					38	1.142	1.495	1.913	2.401	2.961	3.592	4.291	5.050						
					43		1.348	1.729	2.172	2.681	3.257	3.896							
					46		1.260	1.619	2.036	2.515	3.057								
OP-MCRN038	114X5723	A02	MTZ022	G	27	1.223	1.772	2.406	3.120	3.909	4.767	5.684	6.653						
					32	1.046	1.565	2.162	2.832	3.573	4.377	5.238	6.148	2.892	1.479	1.96		74	43
					38	0.826	1.309	1.862	2.481	3.163	3.905	4.699	5.539						
					43		1.092	1.608	2.184	2.819	3.509								
					46		0.961	1.455	2.006	2.612	3.271								
OP-MCRN048	114X5726	A02	MTZ028	E	27	1.808	2.372	3.062	3.890	4.861	5.979	7.242	8.648						
					32	1.656	2.177	2.812	3.574	4.471	5.506	6.680	7.992	3.637	1.737	2.094		74	43
					38	1.478	1.950	2.522	3.208	4.016	4.953	6.022	7.221						
					43		1.764	2.286	2.910	3.647	4.504								
					46		1.653	2.146	2.734	3.429	4.238								
OP-MCRN048	114X5728	A02	MTZ028	G	27	1.911	2.590	3.382	4.291	5.319	6.465	7.727	9.100						
					32	1.724	2.366	3.113	3.969	4.936	6.014	7.201	8.494	4.042	1.871	2.16		74	43
					38	1.500	2.097	2.788	3.579	4.471	5.466	6.564	7.761						
					43		1.873	2.517	3.252	4.081	5.007								
					46		1.738	2.354	3.055	3.847	4.730								
OP-MCRN054	114X5729	A02	MTZ032	E	27	2.119	2.753	3.517	4.419	5.467	6.663	8.004	9.486						
					32	1.923	2.515	3.224	4.062	5.035	6.147	7.397	8.780	4.136	1.938	2.13		74	43
					38	1.681	2.222	2.866	3.626	4.509	5.521	6.662	7.929						
					43		1.974	2.564	3.259	4.067	4.996								
					46		1.825	2.382	3.037	3.801	4.679								
OP-MCRN054	114X5731	A02	MTZ032	G	27	1.998	2.664	3.432	4.308	5.296	6.397	7.611	8.935						
					32	1.796	2.435	3.166	3.996	4.930	5.968	7.113	8.363	4.071	2.042	1.99		74	43
					38	1.543	2.147	2.832	3.606	4.474	5.438	6.500	7.660						
					43		1.898	2.545	3.271	4.083	4.985								
					46		1.746	2.369	3.066	3.845	4.709								

MBP

This table continues on the next page

(1) E - 400V-3ph-50Hz Compressor & 230V-1ph-50Hz Fan
G - 230V-1ph-50Hz Compressor & 230V-1ph-50Hz Fan
(2) Nominal conditions (EN13215), Evaporating temperatures at dew point, Superheat 10K, Subcooling 0K
(3) Rated conditions (EN13215), Evaporating temperature (dew point) -10°C, Ambient air temperature +32°C, Return Gas Temperature 20°C, Subcooling 0K

COP: Coefficient Of Perfromance link to EN13215 and ErP (Energy related Products) 2009/125/CE
SEPR: Seasonal Energy Performance Ratio link to EN13215 and ErP (Energy Related Products) 2009/125/CE
Tamb [°C]: Ambient Temperature
Te [°C]: Evaporating Temperature
Q [kW]: Cooling Capacity in Kilo Watt
P [kW]: Power Input in Kilo Watt

Version
A02: Receiver + Stop valves + KP17WB pressure switch + Electrical box

For regular updates and detailed capacities, please refer to **Coolselector®2** software

Model	Code	Version	Compressor	Electrical code (1)	Tamb [°C]	Cooling capacity Q [kW] (2)								EcoDesign (3)				Sound power level dB(A)	Sound pressure level 10 m dB(A)
						Te [°C]								Q [kW]	P [kW]	COP	SEPR		
						-25°C	-20°C	-15°C	-10°C	-5°C	0°C	5°C	10°C						
OP-MCRN060	114X5732	A02	MTZ036	E	27	2.268	3.025	3.923	4.960	6.137	7.448	8.885	10.438						
					32	2.067	2.774	3.609	4.575	5.671	6.893	8.235	9.687	4.664	2.375	1.96		74	43
					38	1.831	2.475	3.234	4.113	5.111	6.226	7.453	8.785						
					43		2.227	2.923	3.729	4.645	5.670								
					46		2.080	2.738	3.499	4.365	5.337								
OP-MCRN060	114X5734	A02	MTZ036	G	27	2.281	3.038	3.909	4.896	6.002	7.225	8.564	10.013						
					32	2.047	2.771	3.598	4.533	5.578	6.732	7.994	9.361	4.622	2.418	1.91		74	43
					38	1.756	2.439	3.213	4.083	5.054	6.125	7.295	8.563						
					43		2.153	2.882	3.698	4.606	5.607								
					46		1.980	2.680	3.464	4.334	5.292								
OP-MCRN068	114X5735	A02	MTZ040	E	27	2.599	3.482	4.523	5.725	7.083	8.594	10.248	12.035						
					32	2.362	3.185	4.155	5.274	6.540	7.951	9.497	11.170	5.376	2.740	1.96	2.79	76	45
					38	2.087	2.834	3.716	4.734	5.888	7.176	8.592	10.126						
					43		2.548	3.354	4.286	5.346	6.530								
					46		2.380	3.139	4.019	5.020	6.143								
OP-MCRN086	114X5737	A02	MTZ050	E	27	2.909	4.000	5.313	6.858	8.638	10.652	12.894	15.353						
					32	2.623	3.647	4.874	6.315	7.977	9.860	11.958	14.265	6.431	2.971	2.17	3.20	84	53
					38	2.271	3.212	4.336	5.653	7.173	8.898	10.826	12.951						
					43		2.843	3.880	5.095	6.497	8.091								
					46		2.619	3.604	4.757	6.088	7.604								
OP-MCRN096	114X5739	A02	MTZ056	E	27	3.205	4.401	5.835	7.515	9.442	11.611	14.012	16.628						
					32	2.891	4.012	5.350	6.916	8.712	10.736	12.979	15.429	7.037	3.270	2.15	3.16	83	52
					38	2.502	3.534	4.758	6.187	7.827	9.678	11.734	13.986						
					43		3.127	4.257	5.573	7.084	8.791								
					46		2.880	3.953	5.202	6.635	8.257								
OP-MCRN108	114X5740	A02	MTZ064	E	27	3.849	5.190	6.762	8.566	10.599	12.851	15.312	17.964						
					32	3.427	4.679	6.147	7.834	9.737	11.850	14.162	16.659	7.978	3.754	2.13	3.01	83	52
					38	2.941	4.084	5.425	6.970	8.716	10.660	12.793	15.101						
					43		3.605	4.839	6.263	7.877	9.678								
					46		3.326	4.494	5.845	7.379	9.094								
OP-MGRN108	114X5743	A02	MTZ064	E	27	3.849	5.190	6.762	8.566	10.599	12.851	15.312	17.964						
					32	3.427	4.679	6.147	7.834	9.737	11.850	14.162	16.659	7.978	3.684	2.17	3.08	83	52
					38	2.941	4.084	5.425	6.970	8.716	10.660	12.793	15.101						
					43		3.605	4.839	6.263	7.877	9.678								
					46		3.326	4.494	5.845	7.379	9.094								

MBP

This table continues on the next page

(1) E - 400V-3ph-50Hz Compressor & 230V-1ph-50Hz Fan
G - 230V-1ph-50Hz Compressor & 230V-1ph-50Hz Fan
(2) Nominal conditions (EN13215), Evaporating temperatures at dew point, Superheat 10K, Subcooling 0K
(3) Rated conditions (EN13215), Evaporating temperature (dew point) -10°C, Ambient air temperature +32°C, Return Gas Temperature 20°C, Subcooling 0K

COP: Coefficient Of Perfromance link to EN13215 and ErP (Energy related Products) 2009/125/CE
SEPR: Seasonal Energy Performance Ratio link to EN13215 and ErP (Energy Related Products) 2009/125/CE
Tamb [°C]: Ambient Temperature
Te [°C]: Evaporating Temperature
Q [kW]: Cooling Capacity in Kilo Watt
P [kW]: Power Input in Kilo Watt

Version
A02: Receiver + Stop valves + KP17WB pressure switch + Electrical box

For regular updates and detailed capacities, please refer to **Coolselector®2** software

Model	Code	Version	Compressor	Electrical code (1)	Tamb [°C]	Cooling capacity Q [kW] (2)								EcoDesign (3)				Sound power level dB(A)	Sound pressure level 10 m dB(A)
						Te [°C]								Q [kW]	P [kW]	COP	SEPR		
						-25°C	-20°C	-15°C	-10°C	-5°C	0°C	5°C	10°C						
OP-MCRN121	114X5744	A02	MTZ072	E	27	4.353	5.852	7.600	9.594	11.823	14.275	16.932	19.771						
					32	3.875	5.274	6.906	8.768	10.855	13.153	15.647	18.317	8.939	4.364	2.05	2.89	82	51
					38	3.324	4.602	6.092	7.795	9.708	11.820	14.117	16.583						
					43		4.061	5.431	7.000	8.766	10.721								
					46		3.745	5.042	6.530	8.207	10.067								
OP-MGRN121	114X5746	A02	MTZ072	E	27	4.353	5.852	7.600	9.594	11.823	14.275	16.932	19.771						
					32	3.875	5.274	6.906	8.768	10.855	13.153	15.647	18.317	8.952	4.294	2.08	2.95	82	51
					38	3.324	4.602	6.092	7.795	9.708	11.820	14.117	16.583						
					43		4.061	5.431	7.000	8.766	10.721								
					46		3.745	5.042	6.530	8.207	10.067								
OP-MCRN136	114X5747	A02	MTZ080	E	27	5.265	6.880	8.748	10.863	13.211	15.773	18.522	21.432						
					32	4.779	6.290	8.034	10.007	12.198	14.589	17.159	19.882	10.236	5.194	1.97	2.74	82	51
					38	4.198	5.580	7.173	8.974	10.974	13.161	15.515	18.013						
					43		4.991	6.454	8.109	9.950	11.965								
					46		4.639	6.024	7.590	9.334	11.246								
OP-MGRN136	114X5749	A02	MTZ080	E	27	5.265	6.880	8.748	10.863	13.211	15.773	18.522	21.432						
					32	4.779	6.290	8.034	10.007	12.198	14.589	17.159	19.882	10.236	5.124	2.00	2.79	82	51
					38	4.198	5.580	7.173	8.974	10.974	13.161	15.515	18.013						
					43		4.991	6.454	8.109	9.950	11.965								
					46		4.639	6.024	7.590	9.334	11.246								
OP-MGRN171	114X5750	A02	MTZ100	E	27	6.111	8.292	10.912	13.990	17.536	21.552	26.030	30.956						
					32	5.463	7.486	9.918	12.781	16.087	19.841	24.039	28.670	13.007	6.306	2.06	3.01	87	56
					38	4.717	6.555	8.764	11.370	14.390	17.831	21.693	25.970						
					43		5.806	7.832	10.226	13.008	16.189								
					46		5.369	7.285	9.553	12.193	15.218								
OP-MGRN215	114X5753	A02	MTZ125	E	27	8.003	10.804	14.133	17.999	22.397	27.312	32.717	38.581						
					32	7.154	9.756	12.850	16.450	20.555	25.153	30.224	35.738	16.770	8.021	2.09	2.99	86	55
					38	6.176	8.538	11.351	14.630	18.382	22.600	27.268	32.362						
					43		7.557	10.134	13.147	16.604	20.504								
					46		6.983	9.419	12.271	15.551	19.261								
OP-MGRN242	114X5754	A02	MTZ144	E	27	9.911	12.849	16.247	20.108	24.420	29.164	34.312	39.831						
					32	8.913	11.656	14.827	18.433	22.467	26.914	31.751	36.945	18.813	9.244	2.04	2.86	85	54
					38	7.769	10.282	13.183	16.484	20.185	24.275	28.734	33.538						
					43		9.180	11.859	14.908	18.331	22.123								
					46		8.535	11.083	13.982	17.239	20.851								
OP-MGRN271	114X5757	A02	MTZ160	E	27	11.163	14.432	18.191	22.434	27.139	32.278	37.811	43.693						
					32	10.041	13.095	16.602	20.563	24.962	29.774	34.965	40.493	21.012	10.583	1.99	2.74	84	53
					38	8.751	11.551	14.762	18.387	22.418	26.837	31.615	36.716						
					43		10.309	13.277	16.625	20.352	24.443								
					46		9.581	12.405	15.589	19.133	23.028								

MBP

(1) E - 400V-3ph-50Hz Compressor & 230V-1ph-50Hz Fan
G - 230V-1ph-50Hz Compressor & 230V-1ph-50Hz Fan

(2) Nominal conditions (EN13215), Evaporating temperatures at dew point, Superheat 10K, Subcooling 0K

(3) Rated conditions (EN13215), Evaporating temperature (dew point) -10°C, Ambient air temperature +32°C, Return Gas Temperature 20°C, Subcooling 0K

COP: Coefficient Of Perfromance link to EN13215 and ErP (Energy related Products) 2009/125/CE
SEPR: Seasonal Energy Performance Ratio link to EN13215 and ErP (Energy Related Products) 2009/125/CE
Tamb [°C]: Ambient Temperature
Te [°C]: Evaporating Temperature
Q [kW]: Cooling Capacity in Kilo Watt
P [kW]: Power Input in Kilo Watt

Version
A02: Receiver + Stop valves + KP17WB pressure switch + Electrical box

For regular updates and detailed capacities, please refer to **Coolselector®2** software

Model	Code	Version	Compressor	Electrical code (1)	Tamb [°C]	Cooling capacity Q [kW] (2) Te [°C] -25°C	-20°C	-15°C	-10°C	-5°C	0°C	5°C	10°C	EcoDesign (3) Q [kW]	P [kW]	COP	SEPR	Sound power level dB(A)	Sound pressure level 10 m dB(A)
OP-MCRN030	114X5721	A02	MTZ018	E	27	1.122	1.519	1.987	2.526	3.139	3.821	4.572	5.387						
					32	0.977	1.346	1.778	2.278	2.844	3.477	4.174	4.932	2.377	1.188	2.00		76	45
					38	0.806	1.140	1.531	1.981	2.493	3.066	3.699	4.390						
					43	0.666	0.972	1.327	1.737	2.203	2.726								
					46	0.584	0.872	1.207	1.592	2.031	2.523								
OP-MCRN030	114X5722	A02	MTZ018	G	27	1.038	1.467	1.967	2.538	3.179	3.888	4.659	5.488						
					32	0.900	1.303	1.771	2.303	2.900	3.559	4.277	5.050	2.404	1.166	2.06		76	45
					38	0.730	1.101	1.528	2.013	2.555	3.155	3.809	4.514						
					43	0.588	0.929	1.321	1.766	2.263	2.812								
					46	0.503	0.827	1.197	1.616	2.086	2.605								
OP-MCRN038	114X5724	A02	MTZ022	E	27	1.616	2.100	2.659	3.292	3.996	4.767	5.602	6.492						
					32	1.434	1.882	2.399	2.984	3.636	4.351	5.125	5.953	3.124	1.554	2.01		74	43
					38	1.226	1.631	2.097	2.624	3.212	3.858	4.559	5.311						
					43	1.060	1.429	1.852	2.330	2.864	3.452	4.092							
					46	0.963	1.310	1.707	2.156	2.657	3.210								
OP-MCRN038	114X5723	A02	MTZ022	G	27	1.278	1.797	2.396	3.074	3.826	4.646	5.529	6.466						
					32	1.104	1.591	2.150	2.781	3.480	4.242	5.063	5.935	2.908	1.464	1.99		74	43
					38	0.892	1.339	1.848	2.422	3.056	3.749	4.495	5.290						
					43	0.715	1.126	1.594	2.118	2.698	3.332								
					46	0.610	1.000	1.441	1.936	2.483	3.081								
OP-MCRN048	114X5726	A02	MTZ028	E	27	2.058	2.586	3.241	4.035	4.980	6.080	7.338	8.751						
					32	1.891	2.377	2.978	3.706	4.574	5.587	6.750	8.060	3.867	1.900	2.04		74	43
					38	1.683	2.117	2.650	3.297	4.071	4.980	6.027	7.214						
					43	1.504	1.892	2.368	2.947	3.641	4.462								
					46	1.396	1.755	2.195	2.732	3.379	4.146								
OP-MCRN048	114X5728	A02	MTZ028	G	27	1.720	2.398	3.198	4.125	5.181	6.362	7.666	9.085						
					32	1.477	2.123	2.878	3.748	4.735	5.838	7.054	8.377	3.909	1.874	2.09		74	43
					38	1.185	1.788	2.485	3.283	4.185	5.190	6.298	7.505						
					43	0.946	1.509	2.154	2.888	3.715	4.637								
					46	0.805	1.342	1.954	2.648	3.430	4.300								
OP-MCRN054	114X5729	A02	MTZ032	E	27	2.274	2.951	3.751	4.680	5.739	6.927	8.240	9.671						
					32	2.040	2.669	3.411	4.270	5.250	6.349	7.565	8.893	4.459	2.118	2.10		74	43
					38	1.752	2.323	2.992	3.766	4.648	5.640	6.740	7.944						
					43	1.510	2.029	2.636	3.337	4.138	5.039								
					46	1.365	1.852	2.420	3.077	3.828	4.675								
OP-MCRN054	114X5731	A02	MTZ032	G	27	1.973	2.720	3.589	4.587	5.715	6.974	8.361	9.872						
					32	1.680	2.381	3.196	4.132	5.190	6.373	7.678	9.101	4.310	2.085	2.07		74	43
					38	1.339	1.983	2.731	3.590	4.563	5.651	6.856	8.172						
					43	1.067	1.661	2.351	3.143	4.043	5.052								
					46	0.910	1.473	2.127	2.879	3.734	4.694								

MBP

This table continues on the next page

(1) E - 400V-3ph-50Hz Compressor & 230V-1ph-50Hz Fan
G - 230V-1ph-50Hz Compressor & 230V-1ph-50Hz Fan
(2) Nominal conditions (EN13215), Evaporating temperatures at dew point, Superheat 10K, Subcooling 0K
(3) Rated conditions (EN13215), Evaporating temperature (dew point) -10°C, Ambient air temperature +32°C, Return Gas Temperature 20°C, Subcooling 0K

COP: Coefficient Of Perfromance link to EN13215 and ErP (Energy related Products) 2009/125/CE
SEPR: Seasonal Energy Performance Ratio link to EN13215 and ErP (Energy Related Products) 2009/125/CE
Tamb [°C]: Ambient Temperature
Te [°C]: Evaporating Temperature
Q [kW]: Cooling Capacity in Kilo Watt
P [kW]: Power Input in Kilo Watt

Version
A02: Receiver + Stop valves + KP17WB pressure switch + Electrical box

For regular updates and detailed capacities, please refer to **Coolselector®2** software

Model	Code	Version	Compressor	Electrical code (1)	Tamb [°C]	Cooling capacity Q [kW] (2)								EcoDesign (3)				Sound power level dB(A)	Sound pressure level 10 m dB(A)
						Te [°C]								Q [kW]	P [kW]	COP	SEPR		
						-25°C	-20°C	-15°C	-10°C	-5°C	0°C	5°C	10°C						
OP-MCRN060	114X5732	A02	MTZ036	E	27	2.574	3.277	4.116	5.099	4.784	7.502	8.917	10.462						
					32	2.355	3.008	3.785	4.692	5.734	6.911	8.218	9.649	4.908	2.603	1.89		74	43
					38	2.076	2.666	3.364	4.178	5.113	6.170	7.348	8.641						
					43	1.835	2.368	2.996	3.730	4.573	5.530								
					46	1.687	2.184	2.770	3.453	4.242	5.138								
OP-MCRN060	114X5734	A02	MTZ036	G	27	2.261	3.178	4.242	5.450	6.798	8.275	9.871	11.572						
					32	1.957	2.818	3.811	4.936	6.189	7.563	9.048	10.633	5.158	2.596	1.99	2.72	74	43
					38	1.585	2.374	3.281	4.304	5.443	6.692	8.044	9.489						
					43	1.274	2.001	2.833	3.770	4.812	5.957								
					46	1.088	1.778	2.563	3.448	4.432	5.513								
OP-MCRN068	114X5735	A02	MTZ040	E	27	2.989	3.839	4.857	6.051	7.422	8.968	10.681	12.549						
					32	2.751	3.542	4.484	5.584	6.847	8.270	9.848	11.571	5.839	2.995	1.95	2.75	76	45
					38	2.440	3.155	4.001	4.986	6.115	7.390	8.806	10.356						
					43	2.163	2.811	3.573	4.459	5.475	6.625								
					46	1.992	2.597	3.307	4.132	5.080	6.153								
OP-MCRN086	114X5737	A02	MTZ050	E	27	3.376	4.530	5.901	7.497	9.320	11.367	13.629	16.095						
					32	3.043	4.123	5.401	6.886	8.581	10.483	12.588	14.886	7.190	3.238	2.22	2.88	84	53
					38	2.625	3.612	4.774	6.120	7.656	9.384	11.299	13.394						
					43	2.267	3.171	4.231	5.458	6.860	8.439								
					46	2.050	2.901	3.898	5.052	6.372	7.860								
OP-MCRN096	114X5739	A02	MTZ056	E	27	3.718	4.984	6.484	8.223	10.199	12.405	14.830	17.458						
					32	3.351	4.535	5.930	7.544	9.377	11.424	13.675	16.119	7.883	3.562	2.21	2.90	83	52
					38	2.891	3.971	5.237	6.697	8.355	10.208	12.250	14.471						
					43	2.495	3.484	4.638	5.967	7.476	9.165								
					46	2.254	3.186	4.271	5.519	6.938	8.528								
OP-MCRN108	114X5740	A02	MTZ064	E	27	4.474	5.874	7.501	9.357	11.436	13.731	16.227	18.907						
					32	3.988	5.295	6.809	8.533	10.466	12.601	14.926	17.426	8.923	4.082	2.19	2.84	83	52
					38	3.415	4.603	5.975	7.537	9.289	11.227	13.343	15.624						
					43	2.946	4.029	5.279	6.701	8.298	10.069								
					46	2.669	3.687	4.861	6.197	7.700	9.369								
OP-MGRN108	114X5743	A02	MTZ064	E	27	4.474	5.874	7.501	9.357	11.436	13.731	16.227	18.907						
					32	3.988	5.295	6.809	8.533	10.466	12.601	14.926	17.426	8.923	4.012	2.22	2.90	83	52
					38	3.415	4.603	5.975	7.537	9.289	11.227	13.343	15.624						
					43	2.946	4.029	5.279	6.701	8.298	10.069								
					46	2.669	3.687	4.861	6.197	7.700	9.369								

MBP

This table continues on the next page

(1) E - 400V-3ph-50Hz Compressor & 230V-1ph-50Hz Fan
G - 230V-1ph-50Hz Compressor & 230V-1ph-50Hz Fan
(2) Nominal conditions (EN13215), Evaporating temperatures at dew point, Superheat 10K, Subcooling 0K
(3) Rated conditions (EN13215), Evaporating temperature (dew point) -10°C, Ambient air temperature +32°C, Return Gas Temperature 20°C, Subcooling 0K

COP: Coefficient Of Perfromance link to EN13215 and ErP (Energy related Products) 2009/125/CE
SEPR: Seasonal Energy Performance Ratio link to EN13215 and ErP (Energy Related Products) 2009/125/CE
Tamb [°C]: Ambient Temperature
Te [°C]: Evaporating Temperature
Q [kW]: Cooling Capacity in Kilo Watt
P [kW]: Power Input in Kilo Watt

Version
A02: Receiver + Stop valves + KP17WB pressure switch + Electrical box

For regular updates and detailed capacities, please refer to **Coolselector®2** software

Model	Code	Version	Compressor	Electrical code (1)	Tamb [°C]	Cooling capacity Q [kW] (2)								EcoDesign (3)				Sound power level dB(A)	Sound pressure level 10 m dB(A)
						Te [°C]								Q [kW]	P [kW]	COP	SEPR		
						-25°C	-20°C	-15°C	-10°C	-5°C	0°C	5°C	10°C						
OP-MCRN121	114X5744	A02	MTZ072	E	27	5.061	6.629	8.441	10.492	12.775	15.274	17.970	20.840						
					32	4.507	9.740	7.653	9.557	11.676	13.996	16.503	19.175	10.006	4.746	2.11	2.77	82	51
					38	3.855	5.182	6.705	8.426	10.343	12.445	14.720	17.151						
					43	3.323	4.531	5.915	7.479	9.221	11.138								
					46	3.009	4.143	5.441	6.908	8.545	10.347								
OP-MGRN121	114X5746	A02	MTZ072	E	27	5.061	6.629	8.441	10.492	12.775	15.274	17.970	20.840						
					32	4.507	5.969	7.653	9.557	11.676	13.996	16.503	19.175	10.006	4.676	2.14	2.81	82	51
					38	3.855	5.182	6.705	8.426	10.343	12.445	14.720	17.151						
					43	3.323	4.531	5.915	7.479	9.221	11.138								
					46	3.009	4.143	5.441	6.908	8.545	10.347								
OP-MCRN136	114X5747	A02	MTZ080	E	27	5.656	7.221	9.034	11.094	13.396	15.927	18.670	21.602						
					32	5.133	6.596	8.282	10.195	12.330	14.677	17.221	19.943	10.683	5.378	1.99	2.58	82	51
					38	4.492	5.823	7.350	9.078	11.006	13.127	15.430	17.899						
					43	3.947	5.161	6.549	8.118	9.869	11.798								
					46	3.617	4.757	6.059	7.529	9.172	10.984								
OP-MGRN136	114X5749	A02	MTZ080	E	27	5.599	7.138	8.913	10.923	13.157	15.601	18.235	21.033						
					32	5.078	6.515	8.165	10.027	12.095	14.358	16.796	19.390	10.516	5.348	1.97	2.57	82	51
					38	4.439	5.745	7.236	8.915	10.779	12.819	15.021	17.368						
					43	3.898	5.086	6.439	7.960	9.649	11.501								
					46	3.569	4.685	5.952	7.376	8.958	10.694								
OP-MGRN171	114X5750	A02	MTZ100	E	27	7.193	9.480	12.193	15.348	18.949	22.995	27.472	32.361						
					32	6.450	8.580	11.096	14.016	17.351	21.100	25.257	29.806	14.626	6.795	2.15	3.10	87	56
					38	5.553	7.494	9.773	12.412	15.425	18.818	22.590	26.730						
					43	4.797	6.582	8.663	11.067	13.812	16.908								
					46	4.340	6.030	7.992	10.255	12.840	15.759								
OP-MGRN215	114X5753	A02	MTZ125	E	27	9.170	12.040	15.402	19.263	17.908	28.437	33.704	39.377						
					32	8.199	10.872	13.992	17.570	21.603	26.077	30.970	36.252	18.369	8.683	2.12	3.10	86	55
					38	7.035	9.464	12.287	15.520	19.166	23.218	27.661	32.470						
					43	6.066	8.286	10.856	13.797	17.117	20.814								
					46	5.486	7.578	9.994	12.758	15.880	19.364								
OP-MGRN242	114X5754	A02	MTZ144	E	27	11.122	13.934	17.174	20.852	24.963	29.495	34.425	39.723						
					32	9.989	12.605	15.615	19.032	22.856	27.079	31.684	36.646	19.922	10.070	1.98	3.01	85	54
					38	8.658	11.029	13.754	16.848	20.319	24.165	28.373	32.924						
					43	7.570	9.730	12.209	15.028	18.199	21.723								
					46	6.926	8.956	11.285	13.936	16.924	20.253								
OP-MGRN271	114X5757	A02	MTZ160	E	27	12.150	15.195	18.675	22.594	26.941	31.696	36.826	42.289						
					32	10.903	13.738	16.969	20.603	24.637	29.053	33.823	38.914	21.600	11.452	1.89	2.71	84	53
					38	9.430	12.004	14.928	18.213	21.862	25.864	30.198	34.835						
					43	8.218	10.569	13.230	16.218	19.541	23.192								
					46	7.497	9.711	12.211	15.019	18.143	21.582								

MBP

(1) E - 400V-3ph-50Hz Compressor & 230V-1ph-50Hz Fan
G - 230V-1ph-50Hz Compressor & 230V-1ph-50Hz Fan

(2) Nominal conditions (EN13215), Evaporating temperatures at dew point, Superheat 10K, Subcooling 0K

(3) Rated conditions (EN13215), Evaporating temperature (dew point) -10°C, Ambient air temperature +32°C, Return Gas Temperature 20°C, Subcooling 0K

COP: Coefficient Of Perfromance link to EN13215 and ErP (Energy related Products) 2009/125/CE
SEPR: Seasonal Energy Performance Ratio link to EN13215 and ErP (Energy Related Products) 2009/125/CE
Tamb [°C]: Ambient Temperature
Te [°C]: Evaporating Temperature
Q [kW]: Cooling Capacity in Kilo Watt
P [kW]: Power Input in Kilo Watt

Version
A02: Receiver + Stop valves + KP17WB pressure switch + Electrical box

For regular updates and detailed capacities, please refer to **Coolselector®2** software

Model	Code	Version	Compressor	Electrical code (1)	Tamb [°C]	Cooling capacity Q [kW] (2)								EcoDesign (3)				Sound power level dB(A)	Sound pressure level 10 m dB(A)
						Te [°C]								Q [kW]	P [kW]	COP	SEPR		
						-25°C	-20°C	-15°C	-10°C	-5°C	0°C	5°C	10°C						
OP-MCRN030	114X5721	A02	MTZ018	E	27	0.780	1.152	1.600	2.127	2.729	3.405	4.149	4.956						
					32	0.691	1.036	1.453	1.941	2.501	3.130	3.823	4.577	1.976	1.073	1.84		76	45
					38	0.584	0.898	1.275	1.718	2.226	2.799	3.433	4.123						
					43			1.128	1.533	1.998	2.524								
					46			1.041	1.422	1.862									
OP-MCRN030	114X5722	A02	MTZ018	G	27	0.779	1.150	1.598	2.123	2.725	3.399	4.141	4.946						
					32	0.690	1.035	1.450	1.938	2.496	3.123	3.815	4.567	1.973	1.113	1.77		76	45
					38	0.583	0.896	1.273	1.714	2.221	2.792	3.424	4.112						
					43			1.125	1.529	1.993	2.517								
					46			1.038	1.419	1.857									
OP-MCRN038	114X5724	A02	MTZ022	E	27	1.151	1.616	2.169	2.806	3.525	4.320	5.184	6.106						
					32	1.008	1.441	1.955	2.549	3.219	3.962	4.769	5.633	2.599	1.315	1.98		74	43
					38	0.840	1.232	1.698	2.238	2.850	3.529	4.269	5.063						
					43			1.486	1.981	2.543	3.169	3.853							
					46			1.362	1.828	2.360									
OP-MCRN038	114X5723	A02	MTZ022	G	27	1.149	1.613	2.164	2.800	3.518	4.310	5.171	6.090						
					32	1.006	1.438	1.951	2.543	3.211	3.951	4.755	5.616	2.593	1.365	1.90		74	43
					38	0.838	1.229	1.693	2.232	2.841	3.518	4.255	5.045						
					43			1.482	1.974	2.534	3.157								
					46			1.357	1.822	2.351									
OP-MCRN048	114X5726	A02	MTZ028	E	27	1.568	2.218	2.988	3.883	4.905	6.055	7.330	8.725						
					32	1.379	1.991	2.715	3.556	4.517	5.598	6.798	8.114	3.617	1.755	2.06		74	43
					38	1.154	1.720	2.389	3.164	4.051	5.050	6.161	7.381						
					43			2.118	2.839	3.663	4.594	5.630							
					46			1.958	2.645	3.432									
OP-MCRN048	114X5728	A02	MTZ028	G	27	1.566	2.215	2.984	3.878	4.899	6.047	7.320	8.712						
					32	1.377	1.989	2.712	3.551	4.510	5.590	6.788	8.101	3.613	1.820	1.99		74	43
					38	1.152	1.718	2.385	3.159	4.044	5.041	6.149	7.367						
					43			2.115	2.834	3.656	4.584								
					46			1.954	2.640	3.425									
OP-MCRN054	114X5729	A02	MTZ032	E	27	1.873	2.589	3.434	4.409	5.516	6.752	8.112	9.589						
					32	1.664	2.340	3.133	4.048	5.087	6.246	7.523	8.910	4.121	1.934	2.13		74	43
					38	1.408	2.032	2.763	3.605	4.560	5.627	6.803	8.084						
					43			2.451	3.230	4.114	5.103								
					46			2.263	3.004	3.846									
OP-MCRN054	114X5731	A02	MTZ032	G	27	1.871	2.586	3.429	4.403	5.508	6.742	8.099	9.573						
					32	1.662	2.336	3.129	4.042	5.078	6.235	7.509	8.893	4.116	2.006	2.05		74	43
					38	1.405	2.029	2.758	3.598	4.551	5.615	6.788	8.065						
					43			2.446	3.223	4.105	5.092								
					46			2.258	2.997	3.836									

MBP **This table continues on the next page**

(1) E - 400V-3ph-50Hz Compressor & 230V-1ph-50Hz Fan
G - 230V-1ph-50Hz Compressor & 230V-1ph-50Hz Fan
(2) Nominal conditions (EN13215), Evaporating temperatures at dew point, Superheat 10K, Subcooling 0K
(3) Rated conditions (EN13215), Evaporating temperature (dew point) -10°C, Ambient air temperature +32°C, Return Gas Temperature 20°C, Subcooling 0K

COP: Coefficient Of Perfromance link to EN13215 and ErP (Energy related Products) 2009/125/CE
SEPR: Seasonal Energy Performance Ratio link to EN13215 and ErP (Energy Related Products) 2009/125/CE
Tamb [°C]: Ambient Temperature
Te [°C]: Evaporating Temperature
Q [kW]: Cooling Capacity in Kilo Watt
P [kW]: Power Input in Kilo Watt

Version
A02: Receiver + Stop valves + KP17WB pressure switch + Electrical box

For regular updates and detailed capacities, please refer to **Coolselector®2** software

Model	Code	Version	Compressor	Electrical code (1)	Tamb [°C]	Cooling capacity Q [kW] (2)								EcoDesign (3)				Sound power level dB(A)	Sound pressure level 10 m dB(A)
						Te [°C]								Q [kW]	P [kW]	COP	SEPR		
						-25°C	-20°C	-15°C	-10°C	-5°C	0°C	5°C	10°C						
OP-MCRN060	114X5732	A02	MTZ036	E	27	2.189	2.997	3.937	5.009	6.210	7.535	8.975	10.520						
					32	1.957	2.721	3.605	4.609	5.732	6.970	8.316	9.760	4.697	2.345	2.00		74	43
					38	1.669	2.379	3.193	4.116	5.145	6.279	7.512	8.836						
					43			2.845	3.698	4.649	5.696	6.834							
					46			2.634	3.445	4.349									
OP-MCRN060	114X5734	A02	MTZ036	G	27	2.186	2.993	3.932	5.001	6.200	7.521	8.958	10.498						
					32	1.954	2.717	3.599	4.601	5.722	6.956	8.298	9.737	4.689	2.432	1.93		74	43
					38	1.666	2.374	3.187	4.107	5.134	6.264	7.492	8.811						
					43			2.838	3.689	4.637	5.680								
					46			2.628	3.436	4.337									
OP-MCRN068	114X5735	A02	MTZ040	E	27	2.555	3.467	4.515	5.702	7.026	8.483	10.066	11.765						
					32	2.307	3.174	4.163	5.278	6.517	7.879	9.357	10.942	5.379	2.649	2.03	2.57	76	45
					38	1.996	2.808	3.725	4.751	5.888	7.134	8.485	9.934						
					43			3.349	4.300	5.351	6.499								
					46			3.121	4.027	5.024									
OP-MCRN086	114X5737	A02	MTZ050	E	27	2.969	4.106	5.454	7.017	8.798	10.791	12.990	15.384						
					32	2.617	3.678	4.937	6.399	8.066	9.936	12.003	14.259	6.513	2.866	2.27	3.08	84	53
					38	2.204	3.174	4.324	5.663	7.193	8.915	10.824	12.913						
					43			3.825	5.060	6.475	8.072								
					46			3.531	4.703	6.049									
OP-MCRN096	114X5739	A02	MTZ056	E	27	3.077	4.284	5.719	7.390	9.297	11.438	13.804	16.382						
					32	2.713	3.844	5.188	6.755	8.547	10.561	12.792	15.229	6.879	3.120	2.20	2.94	83	52
					38	2.290	3.328	4.563	6.004	7.656	9.519	11.587	13.852						
					43			4.054	5.390	6.925	8.660								
					46			3.754	5.027	6.492									
OP-MCRN108	114X5740	A02	MTZ064	E	27	3.662	5.024	6.637	8.507	10.633	13.005	15.611	18.432						
					32	3.246	4.525	6.038	7.791	9.785	12.013	14.465	17.123	7.943	3.730	2.13	2.81	83	52
					38	2.741	3.918	5.308	6.920	8.755	10.810	13.076	15.540						
					43			4.698	6.190	7.891	9.802								
					46			4.334	5.753	7.374									
OP-MGRN108	114X5743	A02	MTZ064	E	27	3.662	5.024	6.637	8.507	10.633	13.005	15.611	18.432						
					32	3.246	4.525	6.038	7.791	9.785	12.013	14.465	17.123	7.943	3.660	2.17	2.87	83	52
					38	2.741	3.918	5.308	6.920	8.755	10.810	13.076	15.540						
					43			4.698	6.190	7.891	9.802								
					46			4.334	5.753	7.374									

MBP

This table continues on the next page

(1) E - 400V-3ph-50Hz Compressor & 230V-1ph-50Hz Fan
G - 230V-1ph-50Hz Compressor & 230V-1ph-50Hz Fan
(2) Nominal conditions (EN13215), Evaporating temperatures at dew point, Superheat 10K, Subcooling 0K
(3) Rated conditions (EN13215), Evaporating temperature (dew point) -10°C, Ambient air temperature +32°C, Return Gas Temperature 20°C, Subcooling 0K

COP: Coefficient Of Perfromance link to EN13215 and ErP (Energy related Products) 2009/125/CE
SEPR: Seasonal Energy Performance Ratio link to EN13215 and ErP (Energy Related Products) 2009/125/CE
Tamb [°C]: Ambient Temperature
Te [°C]: Evaporating Temperature
Q [kW]: Cooling Capacity in Kilo Watt
P [kW]: Power Input in Kilo Watt

Version
A02: Receiver + Stop valves + KP17WB pressure switch + Electrical box

For regular updates and detailed capacities, please refer to **Coolselector®2** software

Model	Code	Version	Compressor	Electrical code (1)	Tamb [°C]	Cooling capacity Q [kW] (2)								EcoDesign (3)				Sound power level dB(A)	Sound pressure level 10 m dB(A)
						Te [°C]								Q [kW]	P [kW]	COP	SEPR		
						-25°C	-20°C	-15°C	-10°C	-5°C	0°C	5°C	10°C						
OP-MCRN121	114X5744	A02	MTZ072	E	27	4.129	5.614	7.350	9.336	11.567	14.033	16.717	19.600						
					32	3.642	5.035	6.663	8.528	10.628	12.951	15.484	18.209	8.702	4.156	2.09	2.76	82	51
					38	3.076	4.355	5.852	7.571	9.509	11.660	14.011	16.546						
					43			5.193	6.787	8.589	10.595								
					46			4.805	6.324	8.044									
OP-MGRN121	114X5746	A02	MTZ072	E	27	4.129	5.614	7.350	9.336	11.567	14.033	16.717	19.600						
					32	3.642	5.035	6.663	8.528	10.628	12.951	15.484	18.209	8.702	4.086	2.13	2.82	82	51
					38	3.076	4.355	5.852	7.571	9.509	11.660	14.011	16.546						
					43			5.193	6.787	8.589	10.595								
					46			4.805	6.324	8.044									
OP-MCRN136	114X5747	A02	MTZ080	E	27	4.838	6.488	8.377	10.501	12.846	15.396	18.128	21.018						
					32	4.313	5.872	7.649	9.643	11.844	14.238	16.804	19.520	9.855	4.902	2.01	2.64	82	51
					38	3.685	5.132	6.774	8.611	10.638	12.843	15.208	17.716						
					43			6.047	7.753	9.634	11.680								
					46			5.615	7.241	9.033									
OP-MGRN136	114X5749	A02	MTZ080	E	27	4.838	6.488	8.377	10.501	12.846	15.396	18.128	21.018						
					32	4.313	5.872	7.649	9.643	11.844	14.238	16.804	19.520	9.855	4.902	2.01	2.64	82	51
					38	3.685	5.132	6.774	8.611	10.638	12.843	15.208	17.716						
					43			6.047	7.753	9.634	11.680								
					46			5.615	7.241	9.033									
OP-MGRN171	114X5750	A02	MTZ100	E	27	5.722	7.951	10.592	13.658	17.151	21.065	25.388	30.098						
					32	5.134	7.239	9.720	12.592	15.859	19.521	23.567	27.981	12.812	6.257	2.05	2.83	87	56
					38	4.389	6.343	8.631	11.270	14.268	17.628	21.343	25.403						
					43			7.696	10.140	12.913	16.022								
					46			7.126	9.452	12.091									
OP-MGRN215	114X5753	A02	MTZ125	E	27	7.559	10.266	13.446	17.108	21.251	25.867	30.937	36.433						
					32	6.687	9.225	12.205	15.641	19.533	23.876	28.654	33.844	15.935	7.758	2.05	2.83	86	55
					38	5.669	7.999	10.737	13.897	17.486	21.500	25.926	30.745						
					43			9.539	12.467	15.799	19.536								
					46			8.834	11.621	14.798									
OP-MGRN242	114X5754	A02	MTZ144	E	27	8.818	11.861	15.388	19.399	23.882	28.814	34.160	39.879						
					32	7.889	10.760	14.074	17.836	22.036	26.656	31.666	37.030	18.193	8.951	2.03	2.74	85	54
					38	6.751	9.410	12.465	15.923	19.782	24.027	28.635	33.574						
					43			11.109	14.312	17.883	21.814								
					46			10.295	13.342	16.740									
OP-MGRN271	114X5757	A02	MTZ160	E	27	9.535	12.804	16.576	20.846	25.595	30.788	36.383	42.325						
					32	8.538	11.627	15.177	19.185	23.637	28.505	33.750	39.325	19.587	10.096	1.94	2.58	84	53
					38	7.319	10.186	13.463	17.154	21.249	25.726	30.552	35.686						
					43			12.020	15.443	19.238	23.386								
					46			11.153	14.413	18.025									

MBP

(1) E - 400V-3ph-50Hz Compressor & 230V-1ph-50Hz Fan
G - 230V-1ph-50Hz Compressor & 230V-1ph-50Hz Fan

(2) Nominal conditions (EN13215), Evaporating temperatures at dew point, Superheat 10K, Subcooling 0K

(3) Rated conditions (EN13215), Evaporating temperature (dew point) -10°C, Ambient air temperature +32°C, Return Gas Temperature 20°C, Subcooling 0K

COP: Coefficient Of Perfromance link to EN13215 and ErP (Energy related Products) 2009/125/CE
SEPR: Seasonal Energy Performance Ratio link to EN13215 and ErP (Energy Related Products) 2009/125/CE
Tamb [°C]: Ambient Temperature
Te [°C]: Evaporating Temperature
Q [kW]: Cooling Capacity in Kilo Watt
P [kW]: Power Input in Kilo Watt

Version
A02: Receiver + Stop valves + KP17WB pressure switch + Electrical box

For regular updates and detailed capacities, please refer to **Coolselector®2** software

Model	Code	Version	Compressor	Electrical code (1)	Tamb [°C]	Cooling capacity Q [kW] (2)								EcoDesign (3)				Sound power level dB(A)	Sound pressure level 10 m dB(A)
						Te [°C]								Q [kW]	P [kW]	COP	SEPR		
						-25°C	-20°C	-15°C	-10°C	-5°C	0°C	5°C	10°C						
OP-MCRN030	114X5721	A02	MTZ018	E	27	0.827	1.228	1.705	2.257	2.882	3.579	4.343	5.170						
					32	0.715	1.086	1.529	2.043	2.628	3.282	4.000	4.780	2.060	1.132	1.82		76	45
					38		0.939	1.342	1.812	2.349	2.951	3.615	4.339						
					43			1.206	1.640	2.137	2.696								
					46			1.132	1.545	2.018									
OP-MCRN030	114X5722	A02	MTZ018	G	27	0.826	1.226	1.701	2.252	2.877	3.572	4.334	5.159						
					32	0.713	1.084	1.526	2.039	2.623	3.275	3.992	4.769	2.056	1.175	1.75		76	45
					38		0.937	1.339	1.808	2.344	2.944	3.606	4.327						
					43			1.204	1.637	2.132	2.689								
					46			1.130	1.542	2.014									
OP-MCRN038	114X5724	A02	MTZ022	E	27	1.217	1.710	2.287	2.948	3.689	4.507	5.398	6.355						
					32	1.049	1.508	2.047	2.667	3.367	4.142	4.988	5.900	2.694	1.389	1.94		74	43
					38		1.297	1.794	2.367	3.016	3.740	4.533	5.391						
					43			1.608	2.144	2.754	3.435								
					46			1.508	2.022	2.608	3.264								
OP-MCRN038	114X5723	A02	MTZ022	G	27	1.214	1.706	2.282	2.941	3.680	4.496	5.384	6.338						
					32	1.047	1.505	2.043	2.661	3.358	4.131	4.974	5.883	2.688	1.442	1.86		74	43
					38		1.294	1.789	2.361	3.008	3.729	4.519	5.374						
					43			1.604	2.139	2.746	3.424								
					46			1.504	2.017	2.601									
OP-MCRN048	114X5726	A02	MTZ028	E	27	1.723	2.426	3.243	4.179	5.238	6.420	7.727	9.157						
					32	1.463	2.118	2.883	3.763	4.763	5.883	7.126	8.492	3.791	1.850	2.05		74	43
					38		1.803	2.512	3.330	4.262	5.312	6.482	7.772						
					43			2.247	3.018	3.899	4.894								
					46			2.105	2.851	3.704									
OP-MCRN048	114X5728	A02	MTZ028	G	27	1.670	2.268	3.000	3.875	4.899	6.074	7.396	8.861						
					32	1.525	2.084	2.763	3.574	4.523	5.614	6.845	8.213	3.600	1.810	1.99		74	43
					38		1.868	2.487	3.223	4.085	5.076	6.200	7.452						
					43			2.260	2.936	3.727	4.638								
					46			2.123	2.765	3.514									
OP-MCRN054	114X5729	A02	MTZ032	E	27	2.029	2.798	3.689	4.706	5.850	7.120	8.515	10.031						
					32	1.755	2.474	3.309	4.265	5.343	6.546	7.870	9.315	4.299	2.037	2.11		74	43
					38		2.135	2.909	3.796	4.801	5.925	7.168	8.528						
					43			2.618	3.453	4.400	5.461								
					46			2.460	3.266	4.180									
OP-MCRN054	114X5731	A02	MTZ032	G	27	2.026	2.794	3.683	4.698	5.840	7.108	8.500	10.012						
					32	1.752	2.470	3.303	4.257	5.334	6.534	7.855	9.297	4.292	2.114	2.03		74	43
					38		2.132	2.904	3.790	4.792	5.913	7.153	8.510						
					43			2.614	3.447	4.392	5.451								
					46			2.456	3.260	4.172									

MBP

This table continues on the next page

(1) E - 400V-3ph-50Hz Compressor & 230V-1ph-50Hz Fan
G - 230V-1ph-50Hz Compressor & 230V-1ph-50Hz Fan
(2) Nominal conditions (EN13215), Evaporating temperatures at dew point, Superheat 10K, Subcooling 0K
(3) Rated conditions (EN13215), Evaporating temperature (dew point) -10°C, Ambient air temperature +32°C, Return Gas Temperature 20°C, Subcooling 0K

COP: Coefficient Of Perfromance link to EN13215 and ErP (Energy related Products) 2009/125/CE
SEPR: Seasonal Energy Performance Ratio link to EN13215 and ErP (Energy Related Products) 2009/125/CE
Tamb [°C]: Ambient Temperature
Te [°C]: Evaporating Temperature
Q [kW]: Cooling Capacity in Kilo Watt
P [kW]: Power Input in Kilo Watt

Version
A02: Receiver + Stop valves + KP17WB pressure switch + Electrical box

For regular updates and detailed capacities, please refer to **Coolselector®2** software

Model	Code	Version	Compressor	Electrical code (1)	Tamb [°C]	Cooling capacity Q [kW] (2)								EcoDesign (3)				Sound power level dB(A)	Sound pressure level 10 m dB(A)
						Te [°C]								Q [kW]	P [kW]	COP	SEPR		
						-25°C	-20°C	-15°C	-10°C	-5°C	0°C	5°C	10°C						
OP-MCRN060	114X5732	A02	MTZ036	E	27	2.327	3.190	4.181	5.299	4.917	7.902	9.378	10.961						
					32	2.042	2.854	3.785	4.837	6.007	7.294	8.691	10.193	4.881	2.473	1.97		74	43
					38		2.503	3.371	4.350	5.440	6.640	7.946	9.353						
					43			3.067	3.993	5.021	6.153								
					46			2.900	3.796	4.791									
OP-MCRN060	114X5734	A02	MTZ036	G	27	2.323	3.185	4.174	5.289	6.528	7.886	9.358	10.937						
					32	2.039	2.849	3.779	4.828	5.995	7.278	8.672	10.169	4.872	2.565	1.90		74	43
					38		2.498	3.365	4.342	5.429	6.625	7.927	9.330						
					43			3.062	3.985	5.011	6.140								
					46			2.894	3.789	4.781									
OP-MCRN068	114X5735	A02	MTZ040	E	27	2.726	3.692	4.795	6.035	7.411	8.919	10.552	12.305						
					32	2.413	3.324	4.363	5.531	6.827	8.251	9.796	11.457	5.580	2.789	2.00	2.80	76	45
					38		2.937	3.908	4.996	6.204	7.530	8.972	10.524						
					43			3.572	4.602	5.742	6.992								
					46			3.385	4.384	5.486									
OP-MCRN086	114X5737	A02	MTZ050	E	27	3.174	4.390	5.814	7.451	9.299	11.357	13.619	16.078						
					32	2.745	3.870	5.194	6.723	8.459	10.402	12.547	14.890	6.776	3.016	2.25	3.27	84	53
					38		3.344	4.559	5.967	7.576	9.384	11.393	13.597						
					43			4.111	5.429	6.938	8.641								
					46			3.874	5.142	6.595									
OP-MCRN096	114X5739	A02	MTZ056	E	27	3.077	4.576	6.089	7.831	9.805	12.010	14.441	17.094						
					32	2.713	4.043	5.456	7.093	8.958	11.051	13.370	15.911	7.153	3.289	2.17	3.16	83	52
					38	2.290	3.507	4.814	6.335	8.076	10.040	12.229	14.638						
					43			4.365	5.799	7.445	9.310								
					46			4.126	5.515	7.109									
OP-MCRN108	114X5740	A02	MTZ064	E	27	3.662	5.351	7.036	8.972	11.159	13.597	16.280	19.200						
					32	3.246	4.761	6.344	8.171	10.245	12.566	15.132	17.936	8.250	3.937	2.10	2.99	83	52
					38	2.741	4.144	5.616	7.321	9.265	11.452	13.879	16.544						
					43			5.083	6.695	8.538	10.617								
					46			4.790	6.351	8.137									
OP-MGRN108	114X5743	A02	MTZ064	E	27	3.662	5.351	7.036	8.972	11.159	13.597	16.280	19.200						
					32	3.246	4.761	6.344	8.171	10.245	12.566	15.132	17.936	8.250	3.867	2.13	3.05	83	52
					38	2.741	4.144	5.616	7.321	9.265	11.452	13.879	16.544						
					43			5.083	6.695	8.538	10.617								
					46			4.790	6.351	8.137									

MBP

This table continues on the next page

(1) E - 400V-3ph-50Hz Compressor & 230V-1ph-50Hz Fan
G - 230V-1ph-50Hz Compressor & 230V-1ph-50Hz Fan
(2) Nominal conditions (EN13215), Evaporating temperatures at dew point, Superheat 10K, Subcooling 0K
(3) Rated conditions (EN13215), Evaporating temperature (dew point) -10°C, Ambient air temperature +32°C, Return Gas Temperature 20°C, Subcooling 0K

COP: Coefficient Of Perfromance link to EN13215 and ErP (Energy related Products) 2009/125/CE
SEPR: Seasonal Energy Performance Ratio link to EN13215 and ErP (Energy Related Products) 2009/125/CE
Tamb [°C]: Ambient Temperature
Te [°C]: Evaporating Temperature
Q [kW]: Cooling Capacity in Kilo Watt
P [kW]: Power Input in Kilo Watt

Version
A02: Receiver + Stop valves + KP17WB pressure switch + Electrical box

For regular updates and detailed capacities, please refer to **Coolselector®2** software

Model	Code	Version	Compressor	Electrical code (1)	Tamb [°C]	Cooling capacity Q [kW] (2) Te [°C] -25°C	-20°C	-15°C	-10°C	-5°C	0°C	5°C	10°C	EcoDesign (3) Q [kW]	P [kW]	COP	SEPR	Sound power level dB(A)	Sound pressure level 10 m dB(A)
OP-MCRN121	114X5744	A02	MTZ072	E	27	4.129	5.932	7.743	9.797	12.096	14.636	17.413	20.420						
					32	3.642	5.275	6.981	8.929	11.120	13.554	16.226	19.132	9.024	4.391	2.06	2.87	82	51
					38	3.076	4.608	6.202	8.030	10.099	12.409	14.960	17.747						
					43			5.652	7.392	9.366	11.580								
					46			5.361	7.052	8.975									
OP-MGRN121	114X5746	A02	MTZ072	E	27	4.362	5.932	7.743	9.797	12.096	14.636	17.413	20.420						
					32	3.804	5.275	6.981	8.929	11.120	13.554	16.226	19.132	9.024	4.321	2.09	2.92	82	51
					38		4.608	6.202	8.030	10.099	12.409	14.960	17.747						
					43			5.652	7.392	9.366	11.580								
					46			5.361	7.052	8.975									
OP-MCRN136	114X5747	A02	MTZ080	E	27	5.095	6.828	8.793	10.988	13.410	16.051	18.904	21.958						
					32	4.502	6.146	8.014	10.108	12.426	14.963	17.713	20.666	10.232	5.269	1.94	2.67	82	51
					38		5.443	7.209	9.193	11.395	13.814	16.445	19.280						
					43			6.630	8.534	10.650	12.978								
					46			6.314	8.178	10.248									
OP-MGRN136	114X5749	A02	MTZ080	E	27	5.095	6.828	8.793	10.988	13.410	16.051	18.904	21.958						
					32	4.502	6.146	8.014	10.108	12.426	14.963	17.713	20.666	10.232	5.199	1.97	2.71	82	51
					38		5.443	7.209	9.193	11.395	13.814	16.445	19.280						
					43			6.630	8.534	10.650	12.978								
					46			6.314	8.178	10.248									
OP-MGRN171	114X5750	A02	MTZ100	E	27	6.109	8.512	11.331	14.571	18.228	22.294	26.754	31.591						
					32	5.361	7.605	10.233	13.255	16.673	20.484	24.678	29.239	13.354	6.576	2.03	3.13	87	56
					38		6.661	9.091	11.878	15.031	18.551	22.436	26.674						
					43			8.253	10.869	13.822	17.118								
					46			7.785	10.312	13.156									
OP-MGRN215	114X5753	A02	MTZ125	E	27	8.048	10.935	14.279	18.089	16.675	27.118	32.326	37.984						
					32	7.006	9.693	12.821	16.405	20.453	24.966	29.940	35.365	16.552	8.164	2.03	2.99	86	55
					38		8.442	11.338	14.672	18.457	22.700	27.401	32.554						
					43			10.302	13.449	17.033	21.065								
					46			9.758	12.804	16.276									
OP-MGRN242	114X5754	A02	MTZ144	E	27	9.395	12.618	16.301	20.448	25.056	30.115	35.609	41.521						
					32	8.274	11.307	14.779	18.699	23.069	27.884	33.130	38.793	18.889	9.430	2.00	2.86	85	54
					38		9.947	13.191	16.861	20.962	25.495	30.453	35.821						
					43			12.043	15.525	19.420	23.732								
					46			11.420	14.800	18.579									
OP-MGRN271	114X5757	A02	MTZ160	E	27	10.130	13.582	17.510	21.916	26.794	32.131	37.908	44.101						
					32	8.945	12.206	15.925	20.109	24.757	29.859	35.401	41.360	20.332	10.650	1.91	2.67	84	53
					38		10.781	14.276	18.215	22.603	27.436	32.702	38.385						
					43			13.085	16.842	21.030	25.652								
					46			12.437	16.096	20.175									

MBP

(1) E - 400V-3ph-50Hz Compressor & 230V-1ph-50Hz Fan
G - 230V-1ph-50Hz Compressor & 230V-1ph-50Hz Fan

(2) Nominal conditions (EN13215), Evaporating temperatures at dew point, Superheat 10K, Subcooling 0K

(3) Rated conditions (EN13215), Evaporating temperature (dew point) -10°C, Ambient air temperature +32°C, Return Gas Temperature 20°C, Subcooling 0K

COP: Coefficient Of Perfromance link to EN13215 and ErP (Energy related Products) 2009/125/CE
SEPR: Seasonal Energy Performance Ratio link to EN13215 and ErP (Energy Related Products) 2009/125/CE
Tamb [°C]: Ambient Temperature
Te [°C]: Evaporating Temperature
Q [kW]: Cooling Capacity in Kilo Watt
P [kW]: Power Input in Kilo Watt

Version
A02: Receiver + Stop valves + KP17WB pressure switch + Electrical box

For regular updates and detailed capacities, please refer to **Coolselector®2** software

Model	Code	Version	Compressor	Electrical code (1)	Tamb [°C]	Cooling capacity Q [kW] (2)							EcoDesign (3)				Sound power level dB(A)	Sound pressure level 10 m dB(A)
						Te [°C]							Q [kW]	P [kW]	COP	SEPR		
						-15°C	-10°C	-5°C	0°C	5°C	10°C	15°C						
OP-MCRN030	114X5721	A02	MTZ018	E	27	1.512	2.049	2.663	3.350	4.104	4.918	5.785						
					32	1.337	1.843	2.421	3.066	3.774	4.539	5.353	1.863	0.984	1.89		76	45
					38		1.608	2.143	2.738	3.391	4.097							
					43		1.422	1.921	2.476	3.083	3.738							
					46			1.793	2.323	2.902	3.528							
OP-MCRN030	114X5722	A02	MTZ018	G	27	1.434	1.970	2.595	3.305	4.088	4.937	5.839						
					32	1.320	1.821	2.402	3.058	3.784	4.569	5.407	1.841	0.996	1.85	2.77	76	45
					38		1.645	2.179	2.776	3.435	4.148							
					43		1.494	1.993	2.547	3.153	3.807							
					46			1.879	2.409	2.985	3.606							
OP-MCRN038	114X5724	A02	MTZ022	E	27	2.064	2.688	3.388	4.157	4.987	5.868	6.790						
					32	1.855	2.444	3.101	3.821	4.597	5.420	6.281	2.475	1.300	1.90		74	43
					38		2.154	2.760	3.422	4.133	4.886							
					43		1.919	2.482	3.094	3.751	4.445							
					46			2.318	2.900	3.524	4.183							
OP-MCRN038	114X5723	A02	MTZ022	G	27	1.985	2.618	3.338	4.136	5.004	5.931	6.907						
					32	1.786	2.380	3.053	3.800	4.612	5.479	6.392	2.410	1.301	1.85		74	43
					38		2.101	2.720	3.404	4.148	4.943							
					43		1.877	2.449	3.081	3.767	4.501							
					46			2.290	2.890	3.542	4.239							
OP-MCRN048	114X5726	A02	MTZ028	E	27	2.691	3.594	4.632	5.805	7.110	8.538	10.081						
					32	2.432	3.289	4.270	5.375	6.601	7.942	9.391	3.323	1.619	2.05		74	43
					38		2.918	3.830	4.852	5.984	7.220							
					43		2.606	3.460	4.414	5.467	6.617							
					46			3.239	4.151	5.156	6.254							
OP-MCRN048	114X5728	A02	MTZ028	G	27	2.628	3.553	4.612	5.796	7.097	8.501	9.993						
					32	2.380	3.256	4.251	5.359	6.573	7.882	9.272	3.289	1.655	1.99		74	43
					38		2.896	3.819	4.840	5.953	7.149							
					43		2.591	3.458	4.409	5.440	6.545							
					46			3.239	4.149	5.133	6.184							
OP-MCRN054	114X5729	A02	MTZ032	E	27	3.242	4.203	5.297	6.520	7.864	9.321	10.877						
					32	2.942	3.851	4.881	6.028	7.287	8.650	10.106	3.894	1.839	2.12		74	43
					38		3.428	4.381	5.438	6.594	7.845							
					43		3.077	3.966	4.948	6.019	7.176							
					46			3.718	4.655	5.675	6.776							
OP-MCRN054	114X5731	A02	MTZ032	G	27	3.171	4.164	5.291	6.549	7.929	9.424	11.020						
					32	2.862	3.806	4.871	6.055	7.351	8.753	10.250	3.848	1.877	2.05		74	43
					38		3.373	4.365	5.461	6.658	7.950							
					43		3.011	3.943	4.967	6.081	7.281							
					46			3.689	4.670	5.736	6.880							

This table continues on the next page

MBP

(1) E - 400V-3ph-50Hz Compressor & 230V-1ph-50Hz Fan
G - 230V-1ph-50Hz Compressor & 230V-1ph-50Hz Fan

(2) Nominal conditions (EN13215), Evaporating temperatures at dew point, Superheat 10K, Subcooling 0K

(3) Rated conditions (EN13215), Evaporating temperature (dew point) -10°C, Ambient air temperature +32°C, Return Gas Temperature 20°C, Subcooling 0K

COP: Coefficient Of Perfromance link to EN13215 and ErP (Energy related Products) 2009/125/CE
SEPR: Seasonal Energy Performance Ratio link to EN13215 and ErP (Energy Related Products) 2009/125/CE
Tamb [°C]: Ambient Temperature
Te [°C]: Evaporating Temperature
Q [kW]: Cooling Capacity in Kilo Watt
P [kW]: Power Input in Kilo Watt

Version
A02: Receiver + Stop valves + KP17WB pressure switch + Electrical box

For regular updates and detailed capacities, please refer to **Coolselector®2** software

Model	Code	Version	Compressor	Electrical code (1)	Tamb [°C]	Cooling capacity Q [kW] (2)							EcoDesign (3)				Sound power level dB(A)	Sound pressure level 10 m dB(A)
						Te [°C]							Q [kW]	P [kW]	COP	SEPR		
						-15°C	-10°C	-5°C	0°C	5°C	10°C	15°C						
OP-MCRN060	114X5732	A02	MTZ036	E	27	3.729	4.757	5.914	7.190	8.574	10.052	11.610						
					32	3.415	4.387	5.474	6.669	7.961	9.339	10.792	4.440	2.258	1.97		74	43
					38		3.939	4.946	6.046	7.231	8.491	9.817						
					43		3.560	4.503	5.526	6.623	7.787	9.008						
					46			4.235	5.213	6.259	7.365	8.524						
OP-MCRN060	114X5734	A02	MTZ036	G	27	3.599	4.677	5.894	7.243	8.711	10.287	11.954						
					32	3.256	4.280	5.431	6.702	8.083	9.563	11.128	4.330	2.219	1.95		74	43
					38		3.794	4.867	6.047	7.325	8.692							
					43		3.378	4.389	5.495	6.688	7.962							
					46			4.098	5.160	6.303	7.521							
OP-MCRN068	114X5735	A02	MTZ040	E	27	4.329	5.488	6.800	8.258	9.849	11.559	13.371						
					32	3.999	5.097	6.332	7.698	9.185	10.781	12.471	5.158	2.609	1.98	2.71	76	45
					38		4.616	5.761	7.020	8.384	9.844							
					43		4.203	5.276	6.447	7.711	9.060							
					46			4.979	6.099	7.303	8.586							
OP-MCRN086	114X5737	A02	MTZ050	E	27	5.009	6.504	8.229	10.181	12.351	14.725	17.285						
					32	4.553	5.959	7.576	9.404	11.435	13.660	16.061	6.025	2.810	2.14	2.89	84	53
					38		5.305	6.795	8.475	10.341	12.385							
					43		4.761	6.146	7.704	9.433	11.329							
					46			5.759	7.244	8.891	10.698							
OP-MCRN096	114X5739	A02	MTZ056	E	27	5.360	7.008	8.912	11.068	13.461	16.074	18.884						
					32	4.868	6.424	8.216	10.241	12.489	14.944	17.586	6.497	3.026	2.15	3.00	83	52
					38		5.723	7.380	9.248	11.319	13.584							
					43		5.142	6.685	8.421	10.346	12.451							
					46			6.271	7.927	9.763	11.772							
OP-MCRN108	114X5740	A02	MTZ064	E	27	6.307	8.073	10.102	12.388	14.916	17.666	20.613						
					32	5.745	7.402	9.307	11.453	13.828	16.416	19.193	7.494	3.488	2.15	3.01	83	52
					38		6.614	8.364	10.338	12.527	14.916							
					43		5.977	7.594	9.421	11.451	13.672							
					46			7.142	8.879	10.812	12.930							
OP-MGRN108	114X5743	A02	MTZ064	E	27	6.307	8.073	10.102	12.388	14.916	17.666	20.613						
					32	5.745	7.402	9.307	11.453	13.828	16.416	19.193	7.494	3.418	2.19	3.08	83	52
					38		6.614	8.364	10.338	12.527	14.916							
					43		5.977	7.594	9.421	11.451	13.672							
					46			7.142	8.879	10.812	12.930							

MBP

This table continues on the next page

(1) E - 400V-3ph-50Hz Compressor & 230V-1ph-50Hz Fan
G - 230V-1ph-50Hz Compressor & 230V-1ph-50Hz Fan
(2) Nominal conditions (EN13215), Evaporating temperatures at dew point, Superheat 10K, Subcooling 0K
(3) Rated conditions (EN13215), Evaporating temperature (dew point) -10°C, Ambient air temperature +32°C, Return Gas Temperature 20°C, Subcooling 0K

COP: Coefficient Of Perfromance link to EN13215 and ErP (Energy related Products) 2009/125/CE
SEPR: Seasonal Energy Performance Ratio link to EN13215 and ErP (Energy Related Products) 2009/125/CE
Tamb [°C]: Ambient Temperature
Te [°C]: Evaporating Temperature
Q [kW]: Cooling Capacity in Kilo Watt
P [kW]: Power Input in Kilo Watt

Version
A02: Receiver + Stop valves + KP17WB pressure switch + Electrical box

Model	Code	Version	Compressor	Electrical code (1)	Tamb [°C]	Cooling capacity Q [kW] (2)							EcoDesign (3)				Sound power level dB(A)	Sound pressure level 10 m dB(A)
						Te [°C]							Q [kW]	P [kW]	COP	SEPR		
						-15°C	-10°C	-5°C	0°C	5°C	10°C	15°C						
OP-MCRN121	114X5744	A02	MTZ072	E	27	6.985	8.954	11.199	13.702	16.439	19.380	22.492						
					32	6.375	8.232	10.341	12.689	15.256	18.013	20.932	8.342	4.120	2.02	2.79	82	51
					38		7.367	9.309	11.468	13.826	16.362							
					43		6.657	8.454	10.452	12.634	14.982							
					46			7.947	9.845	11.920	14.155							
OP-MGRN121	114X5746	A02	MTZ072	E	27	6.985	8.954	11.199	13.702	16.439	19.380	22.492						
					32	6.375	8.232	10.341	12.689	15.256	18.013	20.932	8.342	4.050	2.06	2.84	82	51
					38		7.367	9.309	11.468	13.826	16.362							
					43		6.657	8.454	10.452	12.634	14.982							
					46			7.947	9.845	11.920	14.155							
OP-MCRN136	114X5747	A02	MTZ080	E	27	7.817	9.984	12.410	15.067	17.922	20.935	24.064						
					32	7.164	9.213	11.495	13.985	16.653	19.466	22.386	9.348	4.827	1.94	2.67	82	51
					38		8.281	10.387	12.675	15.120	17.692							
					43		7.503	9.462	11.579	13.836	16.208							
					46			8.907	10.922	13.065	15.316							
OP-MGRN136	114X5749	A02	MTZ080	E	27	7.817	9.984	12.410	15.067	17.922	20.935	24.064						
					32	7.164	9.213	11.495	13.985	16.653	19.466	22.386	9.348	4.757	1.97	2.72	82	51
					38		8.281	10.387	12.675	15.120	17.692							
					43		7.503	9.462	11.579	13.836	16.208							
					46			8.907	10.922	13.065	15.316							
OP-MGRN171	114X5750	A02	MTZ100	E	27	9.666	12.729	16.283	20.326	24.844	29.813	35.202						
					32	8.732	11.621	14.965	18.763	23.008	27.680	32.752	11.741	6.002	1.96	2.81	87	56
					38		10.297	13.381	16.882	20.795	25.106							
					43		9.211	12.073	15.321	18.952	22.959							
					46			11.299	14.392	17.852	21.674							
OP-MGRN215	114X5753	A02	MTZ125	E	27	13.147	16.747	20.846	25.435	30.489	35.972	41.839						
					32	12.015	15.424	19.289	23.605	28.353	33.502	39.015	15.610	7.511	2.08	2.90	86	55
					38		13.814	17.398	21.386	25.766	30.515							
					43		12.463	15.810	19.524	23.597	28.013							
					46			14.856	18.405	22.294	26.508							
OP-MGRN242	114X5754	A02	MTZ144	E	27	14.195	18.105	22.542	27.487	32.910	38.768	45.009						
					32	12.972	16.673	20.856	25.507	30.603	36.106	41.971	16.885	8.499	1.99	2.76	85	54
					38		14.953	18.826	23.122	27.822	32.898							
					43		13.529	17.139	21.134	25.502	30.219							
					46			16.133	19.946	24.112	28.613							
OP-MGRN271	114X5757	A02	MTZ160	E	27	16.529	20.700	25.412	30.631	36.310	42.387	48.793						
					32	15.200	19.138	23.567	28.462	33.781	39.472	45.474	19.406	9.849	1.97	2.71	84	53
					38		17.256	21.345	25.848	30.735	35.962							
					43		15.686	19.489	23.665	28.190	33.028							
					46			18.376	22.355	26.662	31.267							

MBP

(1) E - 400V-3ph-50Hz Compressor & 230V-1ph-50Hz Fan
G - 230V-1ph-50Hz Compressor & 230V-1ph-50Hz Fan

(2) Nominal conditions (EN13215), Evaporating temperatures at dew point, Superheat 10K, Subcooling 0K

(3) Rated conditions (EN13215), Evaporating temperature (dew point) -10°C, Ambient air temperature +32°C, Return Gas Temperature 20°C, Subcooling 0K

COP: Coefficient Of Perfromance link to EN13215 and ErP (Energy related Products) 2009/125/CE
SEPR: Seasonal Energy Performance Ratio link to EN13215 and ErP (Energy Related Products) 2009/125/CE
Tamb [°C]: Ambient Temperature
Te [°C]: Evaporating Temperature
Q [kW]: Cooling Capacity in Kilo Watt
P [kW]: Power Input in Kilo Watt

Version
A02: Receiver + Stop valves + KP17WB pressure switch + Electrical box

For regular updates and detailed capacities, please refer to **Coolselector®2** software

Model	Code	Version	Compressor	Electrical code (1)	Tamb [°C]	Cooling capacity Q [kW] (2)						EcoDesign (3)			
						Te [°C]						Q [kW]	P [kW]	COP	SEPR
						-20°C	-15°C	-10°C	-5°C	0°C	5°C				
OP-MCHC004	114X0301 114X0302 114X0303	A00 A01 A04	TL4DL	G	27	0.262	0.294	0.348	0.422	0.515	0.622				
					32	0.230	0.262	0.315	0.386	0.474	0.574	0.330	0.206	1.60	
					38	0.195	0.226	0.276	0.342	0.422	0.513				
					43	0.167	0.196	0.243	0.303	0.376	0.458				
OP-MCHC006	114X2316 114X2317 114X2319	A00 A01 A04	FR6DL	G	27	0.376	0.455	0.552	0.666	0.796	0.941				
					32	0.337	0.409	0.499	0.603	0.723	0.856	0.524	0.372	1.41	
					38	0.293	0.357	0.435	0.528	0.633	0.751				
					43	0.259	0.314	0.383	0.464	0.557					
OP-MCHC007	114X2424 114X2425 114X2427	A00 A01 A04	NF7MLX	G	27		0.588	0.720	0.869	1.037	1.223				
					32		0.535	0.657	0.796	0.952	1.127	0.690	0.444	1.55	
					38		0.470	0.581	0.708	0.850	1.010				
					43		0.417	0.518	0.634	0.764	0.911				
OP-MCHC010	114X0403 114X0404 114X0405	A00 A01 A04	SC10MLX	G	27	0.620	0.767	0.938	1.132	1.348	1.583				
					32	0.560	0.696	0.853	1.031	1.229	1.445	0.898	0.515	1.74	
					38	0.487	0.609	0.749	0.908	1.085	1.279				
					43	0.426	0.535	0.661	0.804	0.963	1.138				
OP-MCHC013	114X0406 114X0407 114X0408	A00 A01 A04	SC12MLX	G	27	0.737	0.905	1.098	1.316	1.555	1.813				
					32	0.666	0.820	0.997	1.196	1.416	1.653	1.053	0.620	1.70	
					38	0.579	0.717	0.875	1.052	1.247	1.458				
					43	0.506	0.630	0.771	0.930	1.104	1.294				
OP-MCHC015	114X2649 114X2651	A01 A04	SC15MLX	G	27	0.934	1.148	1.396	1.677	1.991	2.337				
					32	0.844	1.043	1.273	1.534	1.826	2.150	1.341	0.836	1.60	
					38	0.738	0.916	1.124	1.360	1.625	1.919				
					43	0.651	0.811	0.998	1.212	1.453	1.722				
OP-MCHC018	114X0702 114X0703	A01 A04	SC18MLX	G	27	1.073	1.315	1.594	1.909	2.259	2.642				
					32	0.970	1.195	1.453	1.745	2.070	2.428	1.533	0.873	1.76	
					38	0.848	1.050	1.282	1.545	1.840	2.164				
					43	0.748	0.929	1.139	1.377	1.644	1.939				
OP-MCHC021	114X2765 114X2767	A01 A04	GS21MLX	G	27	1.259	1.557	1.898	2.278	2.694	3.141				
					32	1.128	1.402	1.715	2.064	2.446	2.859	1.810	1.039	1.74	
					38	0.978	1.222	1.500	1.811	2.152	2.523				
					43	0.858	1.076	1.325	1.603	1.910	2.244				

MBP

(1) E - 400V-3ph-50Hz Compressor & 230V-1ph-50Hz Fan
G - 230V-1ph-50Hz Compressor & 230V-1ph-50Hz Fan

(2) Nominal conditions (EN13215), Evaporating temperatures at dew point, Superheat 10K, Subcooling 0K

(3) Rated conditions (EN13215), Evaporating temperature (dew point) -10°C, Ambient air temperature +32°C, Return Gas Temperature 20°C, Subcooling 0K

COP: Coefficient Of Perfromance link to EN13215 and ErP (Energy related Products) 2009/125/CE
SEPR: Seasonal Energy Performance Ratio link to EN13215 and ErP (Energy Related Products) 2009/125/CE
Tamb [°C]: Ambient Temperature
Te [°C]: Evaporating Temperature
Q [kW]: Cooling Capacity in Kilo Watt
P [kW]: Power Input in Kilo Watt

Version
A00: Without valves and receiver for capillary tubes
A01: With receiver, 2stop valves, brackets and copper pipes for KP
A04: A01 + KP17 WB + FSA-kit + power cord

For regular updates and detailed capacities, please refer to **Coolselector®2** software

Model	Code	Version	Compressor	Electrical code (1)	Tamb [°C]	Cooling capacity Q [kW] (2)								EcoDesign (3)				Sound power level dB(A)	Sound pressure level 10 m dB(A)
						Te [°C]								Q [kW]	P [kW]	COP	SEPR		
						-25°C	-20°C	-15°C	-10°C	-5°C	0°C	5°C	10°C						
OP-MCRN030	114X5721	A02	MTZ018	E	27	0.980	1.391	1.884	2.457	3.109	3.837	4.636	5.500						
					32	0.867	1.243	1.692	2.217	2.814	3.482	4.218	5.016	2.329	1.241	1.88		76	45
					38	0.737	1.070	1.469	1.934	2.465	3.062	3.721	4.439						
					43		0.931	1.287	1.702	2.179	2.715								
					46		0.849	1.180	1.565	2.008	2.509								
OP-MCRN030	114X5722	A02	MTZ018	G	27	0.980	1.391	1.884	2.457	3.109	3.837	4.636	5.500						
					32	0.867	1.243	1.692	2.217	2.814	3.482	4.218	5.016	2.329	1.241	1.88		76	45
					38	0.737	1.070	1.469	1.934	2.465	3.062	3.721	4.439						
					43		0.931	1.287	1.702	2.179	2.715								
					46		0.849	1.180	1.565	2.008	2.509								
OP-MCRN038	114X5724	A02	MTZ022	E	27	1.455	1.959	2.556	3.243	4.017	4.873	5.802	6.798						
					32	1.279	1.741	2.287	2.917	3.630	4.418	5.278	6.200	3.071	1.519	2.02		74	43
					38	1.076	1.484	1.969	2.531	3.167	3.874	4.648	5.481						
					43		1.277	1.710	2.212	2.784	3.423								
					46		1.156	1.556	2.023	2.556	3.153								
OP-MCRN038	114X5723	A02	MTZ022	G	27	2.979	1.959	2.556	3.243	4.017	4.873	5.802	6.798						
					32	1.279	1.741	2.287	2.917	3.630	4.418	5.278	6.200	3.071	1.519	2.02		74	43
					38	1.076	1.484	1.969	2.531	3.167	3.874	4.648	5.481						
					43		1.277	1.710	2.212	2.784	3.423								
					46		1.156	1.556	2.023	2.556	3.153								
OP-MCRN048	114X5726	A02	MTZ028	E	27	2.012	2.709	3.524	4.461	5.522	6.706	8.012	9.436						
					32	1.750	2.397	3.154	4.024	5.010	6.112	7.330	8.661	4.225	2.028	2.08		74	43
					38	1.451	2.038	2.722	3.510	4.405	5.407	6.518	7.735						
					43		1.750	2.373	3.091	3.908	4.826								
					46		1.582	2.168	2.844	3.614	4.481								
OP-MCRN048	114X5728	A02	MTZ028	G	27	2.012	2.709	3.524	4.461	5.522	6.706	8.012	9.436						
					32	4.109	2.397	3.154	4.024	5.010	6.112	7.330	8.661	4.225	2.028	2.08		74	43
					38	1.451	2.038	2.722	3.510	4.405	5.407	6.518	7.735						
					43		1.750	2.373	3.091	3.908	4.826								
					46		1.582	2.168	2.844	3.614	4.481								
OP-MCRN054	114X5729	A02	MTZ032	E	27	2.378	3.136	4.021	5.037	6.182	7.453	8.847	10.356						
					32	2.100	2.803	3.623	4.562	5.623	6.802	8.096	9.499	4.796	2.234	2.15		74	43
					38	1.776	2.410	3.148	3.994	4.950	6.016	7.189	8.464						
					43		2.088	2.755	3.522	4.390	5.360	6.430							
					46		1.897	2.522	3.240	4.054	4.966								
OP-MCRN054	114X5731	A02	MTZ032	G	27	2.378	3.136	4.021	5.037	6.182	7.453	8.847	10.356						
					32	2.100	2.803	3.623	4.562	5.623	6.802	8.096	9.499	4.796	2.234	2.15		74	43
					38	1.776	2.410	3.148	3.994	4.950	6.016	7.189	8.464						
					43		2.088	2.755	3.522	4.390	5.360								
					46		1.897	2.522	3.240	4.054	4.966								

MBP

This table continues on the next page

(1) E - 400V-3ph-50Hz Compressor & 230V-1ph-50Hz Fan
G - 230V-1ph-50Hz Compressor & 230V-1ph-50Hz Fan
(2) Nominal conditions (EN13215), Evaporating temperatures at dew point, Superheat 10K, Subcooling 0K
(3) Rated conditions (EN13215), Evaporating temperature (dew point) -10°C, Ambient air temperature +32°C, Return Gas Temperature 20°C, Subcooling 0K

COP: Coefficient Of Perfromance link to EN13215 and ErP (Energy related Products) 2009/125/CE
SEPR: Seasonal Energy Performance Ratio link to EN13215 and ErP (Energy Related Products) 2009/125/CE
Tamb [°C]: Ambient Temperature
Te [°C]: Evaporating Temperature
Q [kW]: Cooling Capacity in Kilo Watt
P [kW]: Power Input in Kilo Watt

Version
A02: Receiver + Stop valves + KP17WB pressure switch + Electrical box

For regular updates and detailed capacities, please refer to **Coolselector®2** software

Model	Code	Version	Compressor	Electrical code (1)	Tamb [°C]	Cooling capacity Q [kW] (2)								EcoDesign (3)				Sound power level dB(A)	Sound pressure level 10 m dB(A)
						Te [°C]								Q [kW]	P [kW]	COP	SEPR		
						-25°C	-20°C	-15°C	-10°C	-5°C	0°C	5°C	10°C						
OP-MCRN060	114X5732	A02	MTZ036	E	27	2.738	3.588	4.572	5.687	6.929	8.290	9.762	11.333						
					32	2.450	3.238	4.146	5.174	6.317	7.570	8.926	10.376	5.448	2.707	2.01	2.85	74	43
					38	2.104	2.817	3.634	4.555	5.579	6.702	7.919	9.222						
					43		2.465	3.205	4.037	4.961	5.975								
					46		2.254	2.947	3.725	4.589	5.537								
OP-MCRN060	114X5734	A02	MTZ036	G	27	2.738	3.588	4.572	5.687	6.929	8.290	9.762	11.333						
					32	2.450	3.238	4.146	5.174	6.317	7.570	8.926	10.376	5.448	2.707	2.01	2.85	74	43
					38	2.104	2.817	3.634	4.555	5.579	6.702	7.919	9.222						
					43		2.465	3.205	4.037	4.961	5.975								
					46		2.254	2.947	3.725	4.589	5.537								
OP-MCRN068	114X5735	A02	MTZ040	E	27	3.282	4.266	5.409	6.717	8.190	9.826	11.623	13.572						
					32	2.964	3.880	4.942	6.152	7.514	9.027	10.689	12.494	6.463	3.005	2.15	2.77	76	45
					38	2.575	3.409	4.368	5.459	6.686	8.048	9.547	11.177						
					43		3.009	3.881	4.871	5.982	7.217								
					46		2.767	3.585	4.512	5.554	6.712								
OP-MCRN086	114X5737	A02	MTZ050	E	27	3.782	5.021	6.492	8.200	10.149	12.335	14.754	17.396						
					32	3.338	4.474	5.823	7.393	9.189	11.211	13.453	15.911	7.759	3.283	2.36	3.34	84	53
					38	2.837	3.849	5.051	6.456	8.067	9.889	11.919	14.153						
					43		3.352	4.432	5.697	7.154	8.808								
					46		3.063	4.070	5.251	6.615	8.168								
OP-MCRN096	114X5739	A02	MTZ056	E	27	3.925	5.245	6.814	8.640	10.727	13.071	15.668	18.506						
					32	3.465	4.680	6.125	7.809	9.738	11.912	14.326	16.972	8.201	3.578	2.29	3.14	83	52
					38	2.947	4.037	5.332	6.845	8.583	10.550	12.743	15.156						
					43		3.526	4.696	6.065	7.644	9.436								
					46		3.228	4.323	5.606	7.089	8.776								
OP-MCRN108	114X5740	A02	MTZ064	E	27	4.700	6.176	7.927	9.961	12.280	14.880	17.750	20.876						
					32	4.171	5.537	7.154	9.033	11.178	13.588	16.254	19.166	9.500	4.287	2.22	3.07	83	52
					38	3.551	4.780	6.233	7.923	9.856	12.035	14.456	17.108						
					43		4.159	5.472	7.002	8.757	10.742								
					46		3.791	5.019	6.451	8.098	9.966								
OP-MGRN108	114X5743	A02	MTZ064	E	27	4.700	6.176	7.927	9.961	12.280	14.880	17.750	20.876						
					32	4.171	5.537	7.154	9.033	11.178	13.588	16.254	19.166	9.500	4.217	2.25	3.13	83	52
					38	3.551	4.780	6.233	7.923	9.856	12.035	14.456	17.108						
					43		4.159	5.472	7.002	8.757	10.742								
					46		3.791	5.019	6.451	8.098	9.966								

MBP

This table continues on the next page

(1) E - 400V-3ph-50Hz Compressor & 230V-1ph-50Hz Fan
G - 230V-1ph-50Hz Compressor & 230V-1ph-50Hz Fan
(2) Nominal conditions (EN13215), Evaporating temperatures at dew point, Superheat 10K, Subcooling 0K
(3) Rated conditions (EN13215), Evaporating temperature (dew point) -10°C, Ambient air temperature +32°C, Return Gas Temperature 20°C, Subcooling 0K

COP: Coefficient Of Perfromance link to EN13215 and ErP (Energy related Products) 2009/125/CE
SEPR: Seasonal Energy Performance Ratio link to EN13215 and ErP (Energy Related Products) 2009/125/CE
Tamb [°C]: Ambient Temperature
Te [°C]: Evaporating Temperature
Q [kW]: Cooling Capacity in Kilo Watt
P [kW]: Power Input in Kilo Watt

Version
A02: Receiver + Stop valves + KP17WB pressure switch + Electrical box

Model	Code	Version	Compressor	Electrical code (1)	Tamb [°C]	Cooling capacity Q [kW] (2) Te [°C] -25°C	-20°C	-15°C	-10°C	-5°C	0°C	5°C	10°C	EcoDesign (3) Q [kW]	P [kW]	COP	SEPR	Sound power level dB(A)	Sound pressure level 10 m dB(A)
OP-MCRN121	114X5744	A02	MTZ072	E	27	5.284	6.897	8.788	10.957	13.401	16.109	19.069	22.261						
					32	4.675	6.160	7.903	9.907	12.170	14.685	17.440	20.419	10.428	4.787	2.18	3.03	82	51
					38	3.993	5.320	6.881	8.682	10.723	13.001	15.507	18.228						
					43		4.652	6.058	7.686	9.540	11.618								
					46		4.264	5.576	7.099	8.839	10.795								
OP-MGRN121	114X5746	A02	MTZ072	E	27	5.284	6.897	8.788	10.957	13.401	16.109	19.069	22.261						
					32	4.675	6.160	7.903	9.907	12.170	14.685	17.440	20.419	10.428	4.717	2.21	3.08	82	51
					38	3.993	5.320	6.881	8.682	10.723	13.001	15.507	18.228						
					43		4.652	6.058	7.686	9.540	11.618								
					46		4.264	5.576	7.099	8.839	10.795								
OP-MCRN136	114X5747	A02	MTZ080	E	27	6.204	7.979	10.021	12.327	14.886	17.685	20.702	23.917						
					32	5.548	7.192	9.079	11.209	13.574	16.164	18.961	21.948	11.824	5.719	2.07	2.83	82	51
					38	4.789	6.272	7.969	9.884	12.012	14.347	16.877	19.586						
					43		5.522	7.058	8.789	10.717	12.838								
					46		5.077	6.515	8.136	9.942	11.933								
OP-MGRN136	114X5749	A02	MTZ080	E	27	6.204	7.979	10.021	12.327	14.886	17.685	20.702	23.917						
					32	5.548	7.192	9.079	11.209	13.574	16.164	18.961	21.948	11.824	5.649	2.09	2.87	82	51
					38	4.789	6.272	7.969	9.884	12.012	14.347	16.877	19.586						
					43		5.522	7.058	8.789	10.717	12.838								
					46		5.077	6.515	8.136	9.942	11.933								
OP-MGRN171	114X5750	A02	MTZ100	E	27	7.159	9.542	12.363	15.630	19.338	23.478	28.030	32.971						
					32	6.441	8.648	11.249	14.253	17.662	21.470	25.665	30.227	14.969	7.150	2.09	3.02	87	56
					38	5.553	7.554	9.894	12.587	15.641	19.055	22.823	26.932						
					43		6.622	8.749	11.186	13.947	17.036								
					46		6.053	8.053	10.340	12.926	15.821								
OP-MGRN215	114X5753	A02	MTZ125	E	27	9.526	12.393	15.755	19.618	23.976	28.816	34.117	39.850						
					32	8.441	11.075	14.168	17.730	21.759	26.245	31.173	36.516	18.648	8.915	2.09	3.03	86	55
					38	7.227	9.575	12.339	15.533	19.160	23.216	27.688	32.556						
					43		8.385	10.870	13.752	17.039	20.730								
					46		7.694	10.010	12.703	15.783	19.254								
OP-MGRN242	114X5754	A02	MTZ144	E	27	11.170	14.359	18.047	22.232	26.901	32.033	37.594	43.548						
					32	9.988	12.938	16.342	20.204	24.515	29.259	34.407	39.929	21.288	10.307	2.07	2.91	85	54
					38	8.608	11.260	14.314	17.779	21.653	25.923	30.571	35.570						
					43		9.883	12.637	15.764	19.266	23.138								
					46		9.066	11.636	14.557	17.834	21.464								
OP-MGRN271	114X5757	A02	MTZ160	E	27	12.084	15.502	19.434	23.875	28.803	34.187	39.984	46.143						
					32	10.816	13.982	17.616	21.717	26.270	31.249	36.617	42.330	22.911	11.650	1.97	2.74	84	53
					38	9.337	12.187	15.452	19.135	23.229	27.713	32.560	37.731						
					43		10.714	13.661	16.987	20.690	24.756								
					46		9.838	12.590	15.698	19.163	22.975								

MBP

(1) E - 400V-3ph-50Hz Compressor & 230V-1ph-50Hz Fan
G - 230V-1ph-50Hz Compressor & 230V-1ph-50Hz Fan

(2) Nominal conditions (EN13215), Evaporating temperatures at dew point, Superheat 10K, Subcooling 0K

(3) Rated conditions (EN13215), Evaporating temperature (dew point) -10°C, Ambient air temperature +32°C, Return Gas Temperature 20°C, Subcooling 0K

COP: Coefficient Of Perfromance link to EN13215 and ErP (Energy related Products) 2009/125/CE
SEPR: Seasonal Energy Performance Ratio link to EN13215 and ErP (Energy Related Products) 2009/125/CE
Tamb [°C]: Ambient Temperature
Te [°C]: Evaporating Temperature
Q [kW]: Cooling Capacity in Kilo Watt
P [kW]: Power Input in Kilo Watt

Version
A02: Receiver + Stop valves + KP17WB pressure switch + Electrical box

For regular updates and detailed capacities, please refer to **Coolselector®2** software

Application	Code number			Model number	Compressor Model	Electrical Code (1)	Refrigerant (2)	Condenser Coil			Fan		Receiver	Dimensions				Suction line	Liquid line	Weight	
								Type	Airflow	Internal Volume	Number	Blade ø	Volume	Chassis	Height	Width	Depth			Gross	Net
	A09	A10	A11						(m^3/h)	(dm^3)		(mm)	(L)		mm	mm	mm	mm	mm	Kg	Kg
LBP	114F0202	114F0203	114F0201	OP-LCNC004NY	NLY45LAb	G	N	BG2	231	0.25	1	200	0.114	1	226	286	513	6	6	21	19
LBP	114F0205	114F0206	114F0204	OP-LCNC006NY	NLY60LAb	G	N	BG2	231	0.25	1	200	0.114	1	226	286	513	6	6	19	17
LBP	114F0308	114F0309	114F0307	OP-LCNC008NY	NLY80LAb	G	N	BG3	518	0.31	1	230	0.114	2	256	304	513	6	6	20	18
LBP	114F0411	114F0412	114F0410	OP-LCNC011NY	NPY12LAb	G	N	BG4/5	631	0.4	1	254	0.165	3	296	319	513	8	6	25	22
LBP	114F0414	114F0415	114F0413	OP-LCNC016NP	NPT16LA	G	N	BG4/5	631	0.4	1	254	0.165	3	296	319	513	8	6	26	23
LBP	114F0417	114F0418	114F0416	OP-LCNC023NX	NX23FBa	G	N	BG4/5	631	0.4	1	254	0.165	3	296	319	513	10	6	31	28
LBP	114F0620	114F0621	114F0619	OP-LCNC034NS	NS34FB	G	N	BG6	1132	0.63	1	300	0.32	4	350	442	480	12	6	47	41
MBP	114F1202	114F1203	114F1201	OP-MCNC003NB	NBC30RA	G	N	BG2	231	0.25	1	200	0.114	1	226	286	513	6	6	16	14
MBP	114F1205	114F1206	114F1204	OP-MCNC004NY	NLY45RAb	G	N	BG2	231	0.25	1	200	0.114	1	226	286	513	6	6	21	19
MBP	114F1308	114F1309	114F1307	OP-MCNC006NY	NLY60RAb	G	N	BG3	518	0.31	1	230	0.114	2	256	304	513	6	6	20	18
MBP	114F1411	114F1412	114F1410	OP-MCNC008NY	NLY80RAb	G	N	BG4/5	631	0.4	1	254	0.165	3	296	319	513	6	6	25	22
MBP	114F1414	114F1415	114F1413	OP-MCNC009NY	NLY90RAb	G	N	BG4/5	631	0.4	1	254	0.165	3	296	319	513	6	6	25	22
MBP	114F1417	114F1418	114F1416	OP-MCNC011NY	NLY12RAb	G	N	BG4/5	631	0.4	1	254	0.165	3	296	319	513	8	6	26	23
MBP	114F1420	114F1421	114F1419	OP-MCNC014NP	NPT14RA	G	N	BG4/5	631	0.4	1	254	0.165	3	296	319	513	8	6	27	24
MBP	114F1623	114F1624	114F1622	OP-MCNC016NP	NPT16RA	G	N	BG6	1132	0.63	1	300	0.32	4	350	442	480	8	6	36	32
MBP	114F1626	114F1627	114F1625	OP-MCNC018NX	NX18TBa	G	N	BG6	1132	0.63	1	300	0.32	4	350	442	480	10	6	29	26
MBP	114F1629	114F1630	114F1628	OP-MCNC020NX	NX21TBa	G	N	BG6	1132	0.63	1	300	0.32	4	350	442	480	10	6	39	35

(1) E - 400V-3ph-50Hz Compressor & 230V-1ph-50Hz Fan
G - 230V-1ph-50Hz Compressor & 230V-1ph-50Hz Fan
(2) N - R290

Application	Code number			Model number	Compressor Model	Electrical Code (1)	Refrigerant (2)	Condenser Coil			Fan		Receiver	Dimensions				Suction line	Liquid line	Weight	
								Type	Airflow	Internal Volume	Number	Blade ø	Volume	Chassis	Height	Width	Depth			Gross	Net
	A00	A01	A04						(m^3/h)	(dm^3)		(mm)	(L)		mm	mm	mm	inch	inch	Kg	Kg
LBP	114X1208	114X1209	114X1211	OP-LCHC004TL	TL4CL	G	H	BG2	231	0.25	1	200	0.8	2	226	312	446	1/4"	1/4"	19	17
LBP	114X1216	114X1217	114X1219	OP-LCHC006FR	FR6CL	G	H	BG2	231	0.25	1	200	0.8	2	226	312	446	3/8"	1/4"	19	17
LBP	114X1328	114X1329	114X1331	OP-LCHC007NL	NL7CLX	G	H	BG3	518	0.31	1	230	1.1	9	256	321	471	3/8"	1/4"	20	18
LBP	114X1324	114X1325	114X1327	OP-LCHC008FR	FR8.5CL	G	H	BG3	518	0.31	1	230	1.1	9	256	321	471	3/8"	1/4"	20	18
LBP	114X1304	114X1301	114X1302	OP-LCHC008NL	NL8.4CLX	G	H	BG3	518	0.31	1	230	1.1	7	256	318	513	3/8"	1/4"	22	20
LBP	114X1440	114X1441	114X1443	OP-LCHC012SC	SC12CL	G	H	BG4/5	631	0.4	1	254	1.1	10	296	331	487	3/8"	1/4"	25	22
LBP	114X1444			OP-LCHC012SC	SC12CLX.2	G	H	BG4/5	631	0.4	1	254	1.1	10	296	331	487	3/8"	1/4"	23	20
LBP	114X1548	114X1549	114X1551	OP-LCHC015SC	SC15CLX	G	H	BG4/5	631	0.4	1	254	1.1	10	296	331	487	3/8"	1/4"	26	23
LBP	114X1556	114X1557	114X1559	OP-LCHC018SC	SC18CL	G	H	BG4/5	631	0.4	1	254	1.1	11	296	331	513	1/2"	1/4"	26	23
LBP	114X1600	114X1601	114X1602	OP-LCHC021SC	SC21CL	G	H	BG6	1150	0.63	1	300	1.1	12	350	445	613	1/2"	1/4"	47	41
LBP		114X1673		OP-LCHC026GS	GS26CLX	G	H	BG6	1150	0.63	1	300	2.4	13	340	430	480	1/2"	3/8"	45	39
LBP		114X1781	114X1783	OP-LCHC034GS	GS34CLX	G	H	BG7	990	0.84	1	300	2.4	13	340	430	480	1/2"	3/8"	48	42
LBP		114X1221		OP-LCQC004ML	MLY45LAb	G	Q	BG2	231	0.25	1	200	0.8	5	226	302	513	3/8"	1/4"	19	17
LBP		114X1337		OP-LCQC006ML	MLY60LAb	G	Q	BG3	518	0.31	1	230	1.1	7	256	318	513	3/8"	1/4"	20	18
LBP		114X1341		OP-LCQC008ML	MLY80LAb	G	Q	BG3	518	0.31	1	230	1.1	7	256	318	513	3/8"	1/4"	20	18
LBP		114X1449		OP-LCQC012ML	MLY12LAb	G	Q	BG4/5	631	0.4	1	254	1.1	11	296	331	513	3/8"	1/4"	25	22
LBP		114X1569		OP-LCQC012MP	MPT12LA	G	Q	BG4/5	631	0.4	1	254	1.1	11	296	331	513	3/8"	1/4"	26	23
LBP		114X1573		OP-LCQC014MP	MPT14LA	G	Q	BG4/5	631	0.4	1	254	1.1	11	296	331	513	1/2"	1/4"	26	23
MBP	114X0104	114X0105	114X0107	OP-MCGC003TL	TL3GX	G	G	BG1	243	0.13	1	172	0.8	1	205	289	424	1/4"	1/4"	16	14
MBP	114X0108	114X0109	114X0111	OP-MCGC004TL	TL4GX	G	G	BG1	243	0.13	1	172	0.8	1	205	289	424	1/4"	1/4"	16	14
MBP	114X0112	114X0113	114X0115	OP-MCGC005TL	TL5GX	G	G	BG1	243	0.13	1	172	0.8	1	205	289	424	1/4"	1/4"	16	14
MBP	114X0200	114X0201	114X0203	OP-MCGC006FR	FR6GX	G	G	BG2	231	0.25	1	200	0.8	2	226	312	446	3/8"	1/4"	19	17
MBP	114X0228			OP-MCGC006NL	NL6.1MF	G	G	BG2	231	0.25	1	200	0.8	3	226	304	432	3/8"	1/4"	19	17
MBP	114X0216	114X0217	114X0219	OP-MCGC007FR	FR7.5GX	G	G	BG2	231	0.25	1	200	0.8	2	226	312	446	3/8"	1/4"	19	17
MBP	114X0244			OP-MCGC007NL	NL7.3MF	G	G	BG2	231	0.25	1	200	0.8	3	226	304	432	3/8"	1/4"	19	17
MBP	114X0224	114X0225	114X0227	OP-MCGC008FR	FR8.5GX	G	G	BG2	231	0.25	1	200	0.8	2	226	312	446	3/8"	1/4"	19	17
MBP	114X0204	114X0205		OP-MCGC008NL	NL8.4MF	G	G	BG2	231	0.25	1	200	0.8	4	225	313	470	3/8"	1/4"	25	22
MBP	114X0352			OP-MCGC008NL	NL8.4MF	G	G	BG3	518	0.31	1	230	-	6	256	310	444	3/8"	1/4"	20	18
MBP			114X0223	OP-MCGC010SC	SC10GX	G	G	BG2	231	0.25	1	200	0.8	2	226	312	446	3/8"	1/4"	21	19
MBP	114X0336	114X0337	114X0339	OP-MCGC011FR	FR11GX	G	G	BG3	518	0.31	1	230	1.1	8	256	321	458	3/8"	1/4"	20	18
MBP	114X0340	114X0341	114X0343	OP-MCGC012SC	SC12GX	G	G	BG3	518	0.31	1	230	1.1	8	256	321	458	3/8"	1/4"	22	20
MBP	114X0448	114X0449	114X0451	OP-MCGC015SC	SC15GX	G	G	BG4/5	631	0.4	1	254	1.1	10	296	331	478	3/8"	1/4"	25	22
MBP	114X0556	114X0557	114X0559	OP-MCGC018SC	SC18G	G	G	BG4/5	631	0.4	1	254	1.1	10	296	331	478	3/8"	1/4"	27	24
MBP	114X0568			OP-MCGC021SC	SC21MF	G	G	BG4/5	631	0.4	1	254	1.1	10	296	331	478	3/8"	1/4"	26	23
MBP	114X0564	114X0565	114X0567	OP-MCGC021SC	SC21GX	G	G	BG4/5	631	0.4	1	254	1.1	11	296	331	513	3/8"	1/4"	26	23
MBP		114X0773		OP-MCGC026GS	GS26MFX	G	G	BG7	990	0.84	1	300	2.4	13	340	430	480	3/8"	1/4"	39	33
MBP		114X0781		OP-MCGC034GS	GS34MFX	G	G	BG7	990	0.84	1	300	2.4	13	340	430	480	1/2"	3/8"	40	34
MBP	114X2424	114X2425	114X2427	OP-MCHB007NF	NF7MLX	G	H	BG4/5	631	0.4	1	254	1.1	10	296	331	478	3/8"	1/4"	25	22
MBP	114X0301	114X0302	114X0303	OP-MCHC004TL	TL4DL	G	H	BG3	518	0.31	1	230	1.1	6	256	310	444	3/8"	1/4"	18	16
MBP	114X2316	114X2317	114X2319	OP-MCHC006FR	FR6DLX	G	H	BG3	518	0.31	1	230	1.1	8	256	321	458	3/8"	1/4"	20	18
MBP	114X0403	114X0404	114X0405	OP-MCHC010SC	SC10MLX	G	H	BG4/5	631	0.4	1	254	1.1	10	296	331	478	3/8"	1/4"	26	23
MBP	114X0406	114X0407	114X0408	OP-MCHC013SC	SC12MLX	G	H	BG4/5	631	0.4	1	254	1.1	10	296	331	478	3/8"	1/4"	27	24
MBP		114X2649	114X2651	OP-MCHC015SC	SC15MLX	G	H	BG6	1132	1.1	1	300	1.1	14	350	445	613	1/2"	1/4"	48	42
MBP	114X0702	114X0703		OP-MCHC018SC	SC18MLX	G	H	BG7	990	0.84	1	300	1.1	14	350	445	613	1/2"	1/4"	39	33
MBP	114X2765		114X2767	OP-MCHC021GS	GS21MLX	G	H	BG7	990	0.84	1	300	1.6	13	340	430	480	5/8"	3/8"	48	42

(1) E - 400V-3ph-50Hz Compressor & 230V-1ph-50Hz Fan
G - 230V-1ph-50Hz Compressor & 230V-1ph-50Hz Fan
(2) G - R134a
H - R404A/R507
Q - R452A/R404A/R507

Application	Code number	Model number	Compressor Model	Electrical Code (1)	Refrigerant (2)	Condenser Coil			Fan		Receiver	Dimensions				Suction line	Liquid line	Weight	
						Type	Airflow	Internal Volume	Number	Blade ø	Volume	Chassis	Height	Width	Depth			Gross	Net
	A02						(m^2/h)	(dm^3)		(mm)	(L)		mm	mm	mm	inch	inch	Kg	Kg
LBP	114X5758	OP-LCQN048NTA02E	NTZ048	E	Q	A7	1550	0.6	1	350	3	A	545	630	650	5/8''	3/8''	72	62
LBP	114X5759	OP-LCQN048NTA02G	NTZ048	G	Q	A7	1550	0.6	1	350	3	A	545	630	650	5/8''	3/8''	73	63
LBP	114X5761	OP-LCQN068NTA02E	NTZ068	E	Q	D7	3550	0.6	1	450	5.2	C	705	900	900	5/8''	1/2''	96	81
LBP	114X5762	OP-LCQN068NTA02G	NTZ068	G	Q	D7	3550	0.6	1	450	5.2	C	705	900	900	5/8''	1/2''	96	82
LBP	114X5764	OP-LCQN096NTA02E	NTZ096	E	Q	G7	4300	1.62	1	500	7.3	D	836.5	1200	800	7/8''	1/2''	143	123
LBP	114X5768	OP-LCQN108NTA02E	NTZ108	E	Q	G7	4300	1.62	1	500	7.3	D	836.5	1200	800	7/8''	1/2''	143	123
LBP	114X5772	OP-LCQN136NTA02E	NTZ136	E	Q	G7	4300	1.62	1	500	7.3	D	836.5	1200	800	7/8''	1/2''	143	123
LBP	114X5766	OP-LGQN096NTA02E	NTZ096	E	Q	N8	3450	1.54	2	350	7.3	B	693.5	1500	870	7/8''	1/2''	155	131
LBP	114X5769	OP-LGQN108NTA02E	NTZ108	E	Q	N8	3450	1.54	2	350	7.3	B	693.5	1500	870	7/8''	1/2''	157	134
LBP	114X5771	OP-LGQN136NTA02E	NTZ136	E	Q	N8	3450	1.54	2	350	7.3	B	693.5	1500	870	7/8''	1/2''	157	134
LBP	114X5774	OP-LGQN215NTA02E	NTZ215	E	Q	J7	10700	1.97	2	560	14	E	836.5	1500	870	11/8''	5/8''	228	205
LBP	114X5776	OP-LGQN271NTA02E	NTZ271	E	Q	J7	10700	1.97	2	560	14	E	836.5	1500	870	11/8''	5/8''	230	207
MBP	114X5721	OP-MCRN030MTA02E	MTZ018	E	R	A7	1550	0.4	1	350	3	A	545	630	650	1/2''	3/8''	72	62
MBP	114X5722	OP-MCRN030MTA02G	MTZ018	G	R	A7	1550	0.4	1	350	3	A	545	630	650	1/2''	3/8''	72	62
MBP	114X5724	OP-MCRN038MTA02E	MTZ022	E	R	A7	1550	0.4	1	350	3	A	545	630	650	1/2''	3/8''	72	62
MBP	114X5723	OP-MCRN038MTA02G	MTZ022	G	R	A7	1550	0.4	1	350	3	A	545	630	650	1/2''	3/8''	72	62
MBP	114X5726	OP-MCRN048MTA02E	MTZ028	E	R	D7	3550	0.6	1	450	5.2	C	705	900	900	1/2''	1/2''	99	85
MBP	114X5728	OP-MCRN048MTA02G	MTZ028	G	R	D7	3550	0.6	1	450	5.2	C	705	900	900	1/2''	1/2''	100	85
MBP	114X5729	OP-MCRN054MTA02E	MTZ032	E	R	D7	3550	0.6	1	450	5.2	C	705	900	900	5/8''	1/2''	100	86
MBP	114X5731	OP-MCRN054MTA02G	MTZ032	G	R	D7	3550	0.6	1	450	5.2	C	705	900	900	5/8''	1/2''	101	86
MBP	114X5732	OP-MCRN060MTA02E	MTZ036	E	R	D7	4180	0.6	1	500	5.2	C	705	900	900	5/8''	1/2''	101	87
MBP	114X5734	OP-MCRN060MTA02G	MTZ036	G	R	D7	4180	0.6	1	500	5.2	C	705	900	900	5/8''	1/2''	102	87
MBP	114X5735	OP-MCRN068MTA02E	MTZ040	E	R	G7	4300	1.62	1	500	7.3	D	836.5	1200	800	5/8''	1/2''	145	125
MBP	114X5737	OP-MCRN086MTA02E	MTZ050	E	R	G7	4300	1.62	1	500	7.3	D	836.5	1200	800	7/8''	1/2''	145	125
MBP	114X5739	OP-MCRN096MTA02E	MTZ056	E	R	G7	4300	1.62	1	500	7.3	D	836.5	1200	800	7/8''	1/2''	158	138
MBP	114X5740	OP-MCRN108MTA02E	MTZ064	E	R	G7	4300	1.62	1	500	7.3	D	836.5	1200	800	7/8''	1/2''	178	158
MBP	114X5744	OP-MCRN121MTA02E	MTZ072	E	R	G7	4300	1.62	1	500	7.3	D	836.5	1200	800	11/8''	1/2''	148	128
MBP	114X5747	OP-MCRN136MTA02E	MTZ080	E	R	G7	4300	1.62	1	500	7.3	D	836.5	1200	800	11/8''	1/2''	148	128
MBP	114X5743	OP-MGRN108MTA02E	MTZ064	E	R	N8	3450	1.54	2	350	7.3	B	693.5	1500	870	7/8''	1/2''	185	161
MBP	114X5746	OP-MGRN121MTA02E	MTZ072	E	R	N8	3450	1.54	2	350	7.3	B	693.5	1500	870	11/8''	1/2''	163	139
MBP	114X5749	OP-MGRN136MTA02E	MTZ080	E	R	N8	3450	1.54	2	350	7.3	B	693.5	1500	870	11/8''	1/2''	182	158
MBP	114X5750	OP-MGRN171MTA02E	MTZ100	E	R	J7	10700	1.97	2	560	14	E	836.5	1500	870	11/8''	5/8''	208	184
MBP	114X5753	OP-MGRN215MTA02E	MTZ125	E	R	J7	10700	1.97	2	560	14	E	836.5	1500	870	11/8''	5/8''	231	207
MBP	114X5754	OP-MGRN242MTA02E	MTZ144	E	R	J7	10700	1.97	2	560	14	E	836.5	1500	870	11/8''	5/8''	234	210
MBP	114X5757	OP-MGRN271MTA02E	MTZ160	E	R	J7	10700	1.97	2	560	14	E	836.5	1500	870	11/8''	5/8''	236	212

(1) E - 400V-3ph-50Hz Compressor & 230V-1ph-50Hz Fan
G - 230V-1ph-50Hz Compressor & 230V-1ph-50Hz Fan
(2) R - R134a, R404A/R507, R407A, R407C, R407F, R448A/R449A, R452A
Q - R404A/R507, R452A

Designation	OP-LCNC004	OP-LCNC006	OP-LCNC008	OP-LCNC011	OP-LCNC016	OP-LCNC023	OP-LCNC034
Compressor Description	NLY45LAb	NLY60LAb	NLY80LAb	NPY12LAb	NPT16LA	NX23FBa	NS34FB
A09	114F0202	114F0205	114F0308	114F0411	114F0414	114F0417	114F0620
A10	114F0203	114F0206	114F0309	114F0412	114F0415	114F0418	114F0621
A11	114F0201	114F0204	114F0307	114F0410	114F0413	114F0416	114F0619
Condenser coil type	BG2	BG2	BG3	BG4/5	BG4/5	BG4/5	BG6
Electrical code	G	G	G	G	G	G	G
Refrigerant	N	N	N	N	N	N	N
Spare Parts							
Compressor single pack	123B3103	123B3107	123B3115	123B3121	123B3124	123B3128	123B3167
Compressor Industrial pack	123F3103	123F3107	123F3115	123F3121	123F3124	123F3128	123F3167
Condenser	118U0029	118U0029	118U0030	118U0031	118U0031	118U0031	118U0054
HP switch	061F6701	061F6701	061F6701	061F6701	061F6701	061F6701	061F6701
LP switch	061F7959	061F7959	061F7959	061F7959	061F7959	061F7959	061F7959
Fan motor	118U1008	118U1008	118U1008	118U1009	118U1009	118U1009	118U1010
Fan guard	118U0042	118U0042	118U0043	118U0044	118U0044	118U0044	118U0066
Combo filter drier receiver	023Z7012	023Z7012	023Z7012	023Z7013	023Z7013	023Z7013	023Z7007
Electrical Characteristics							
MCC Fan (A)	0.25	0.25	0.25	0.39	0.39	0.39	0.19
LRA Compressor (A)	6.7	10	10.5	14.2	19	30	34.5

MCC - Max Continuous Current
LRA - Locked Rotor Amps

Electrical code
E : 400V-3ph-50Hz Compressor & 230V-1ph-50Hz Fan
G : 230V-1ph-50Hz Compressor & 230V-1ph-50Hz Fan

Designation	OP-LCHC008	OP-LCHC021	OP-LCHC006	OP-LCHC026	OP-LCHC004	OP-LCHC007	OP-LCHC012	OP-LCHC012
Compressor Description	NL8.4CLX	SC21CL	FR6CLX	GS26CLX	TL4CLX	NL7CLX	SC12CLX	SC12CLX.2
A00	114X1304	114X1600	114X1216		114X1208	114X1328	114X1440	114X1444
A01	114X1301	114X1601	114X1217	114X1673	114X1209	114X1329	114X1441	
A04	114X1302	114X1602	114X1219		114X1211	114X1331	114X1443	
Condenser coil type	BG3	BG6	BG2	BG6	BG2	BG3	BG4	BG4
Electrical code	G	G	G	G	G	G	G	G
Refrigerant	H	H	H	H	H	H	H	H
Spare Parts								
Compressor single pack	195B0481	195B0640	195B0032	195B0501	102U2071	105F3710	104L2697	104L2697
Condenser	118U0030	118U0054	118U0029	118U0054	118U0029	118U0030	118U0031	118U0031
Dual pressure switch	060-5393	060-5393	060-5393	-	060-5393	060-5393	060-5393	-
Fan motor	118U0033	118U1010	118U0032	118U0058	118U0032	118U0033	118U0034	118U0034
Fan guard	118U0043	118U0066	118U0042	-	118U0042	118U0043	118U0044	118U0044
Receiver	118U0523	118U0523	118U0517	-	118U0517	118U0523	118U0523	-
Suction valve	118U0079	118U0047	118U0079	118U0047	118U0485	118U0079	118U0079	-
Liquid valve	118U0045	118U0045	118U0045	118U0079	118U0045	118U0045	118U0045	-
Electrical Characteristics								
LRA Compressor (A)	2.5	8.2	8.2	25.7	5.7	10.4	14.8	19.6
MCC Fan (A)	0.25	0.19	0.19	0.75	0.19	0.25	0.39	0.39

Designation	OP-LCHC015	OP-LCHC034	OP-LCHC018	OP-LCQC004	OP-LCQC006	OP-LCQC008	OP-LCQC012	OP-LCQC012	OP-LCQC014
Compressor Description	SC15CLX	GS34CLX	SC18CLX	MLY45Lab	MLY60LAb	MLY80LAb	MPT12LA	MLY12Lab	MPT14LA
A00	114X1548		114X1556						
A01	114X1549	114X1781	114X1557	114X1221	114X1337	114X1341	114X1449	114X1569	114X1573
A04	114X1551	114X1783	114X1559						
Condenser coil type	BG4	BG7		BG2	BG3	BG3	BG4	BG4	BG4
Electrical code	G	G	G	G	G	G	G	G	G
Refrigerant	H	H	H	H	H	H	H	H	H
Spare Parts									
Compressor single pack	104L2854	107B0501	104L2123	123B2106	123B2110	123G2114	123B2120	123B2123	123B2126
Condenser	118U0031	118U0069	118U0031	118U0029	118U0030	118U0030	118U0031	118U0031	118U0031
Dual pressure switch	060-5393	060-5393	060-5393	-	-	-	-	-	-
Fan motor	118U0034	118U0058	118U0034	118U0032	118U0033	118U0033	118U0034	118U0034	118U0034
Fan guard	118U0044	-	118U0044	118U0042	118U0043	118U0043	118U0044	118U0044	118U0044
Receiver	118U0523	-	118U0523	118U0517	118U0523	118U0523	118U0523	118U0523	118U0523
Suction valve	118U0047	118U0047	118U0047	118U0079	118U0079	118U0079	118U0079	118U0047	118U0047
Liquid valve	118U0045	118U0079	118U0045	118U0045	118U0045	118U0045	118U0045	118U0045	118U0045
Electrical Characteristics									
LRA Compressor (A)	18.6	40	20	8.1	10	14	13.9	20	16
MCC Fan (A)	0.39	0.75	0.39	0.19	0.25	0.25	0.39	0.39	0.39

MCC - Max Continuous Current
LRA - Locked Rotor Amps

Electrical code
E : 400V-3ph-50Hz Compressor & 230V-1ph-50Hz Fan
G : 230V-1ph-50Hz Compressor & 230V-1ph-50Hz Fan

Designation	OP-MCNC003	OP-MCNC004	OP-MCNC006	OP-MCNC008	OP-MCNC009
Compressor Description	NBC30RA	NLY45RAb	NLY60RAb	NLY80RAb	NLY90RAb
A09	114F1202	114F1205	114F1308	114F1411	114F1414
A10	114F1203	114F1206	114F1309	114F1412	114F1415
A11	114F1201	114F1204	114F1307	114F1410	114F1413
Condenser coil type	BG2	BG2	BG3	BG4/5	BG4/5
Electrical code	G	G	G	G	G
Refrigerant	N	N	N	N	N
Spare Parts					
Compressor single pack	123B8310	123B3505	123B3507	123B3511	123B3513
Compressor Industrial pack	123F8310	123F3505	123F3507	123F3511	123F3513
Condenser	118U0029	118U0029	118U0030	118U0031	118U0031
HP switch	061F6701	061F6701	061F6701	061F6701	061F6701
LP switch	061F7958	061F7958	061F7958	061F7958	061F7958
Fan motor	118U1008	118U1008	118U1008	118U1009	118U1009
Fan guard	118U0042	118U0042	118U0043	118U0044	118U0044
Receiver	023Z7012	023Z7012	023Z7012	023Z7013	023Z7013
Electrical Characteristics					
MCC Fan (A)	0.25	0.25	0.25	0.39	0.39
LRA Compressor (A)	8.2	8.2	10	13.5	14

Designation	OP-MCNC011	OP-MCNC014	OP-MCNC016	OP-MCNC018	OP-MCNC020
Compressor Description	NLY12RAb	NPT14RA	NPT16RA	NX18TBa	NX21TBa
A09	114F1417	114F1420	114F1623	114F1626	114F1629
A10	114F1418	114F1421	114F1624	114F1627	114F1630
A11	114F1416	114F1419	114F1622	114F1625	114F1628
Condenser coil type	BG4/5	BG4/5	BG6	BG6	BG6
Electrical code	G	G	G	G	G
Refrigerant	N	N	N	N	N
Spare Parts					
Compressor single pack	123B3530	123B3703	123B3712	123B3514	123B3515
Compressor Industrial pack	123F3530	123F3703	123F3712	123F3514	123F3515
Condenser	118U0031	118U0031	118U0054	118U0054	118U0054
HP switch	061F6701	061F6701	061F6701	061F6701	061F6701
LP switch	061F7958	061F7958	061F7958	061F7958	061F7958
Fan motor	118U1009	118U1009	118U1010	118U1010	118U1010
Fan guard	118U0044	118U0044	118U0066	118U0066	118U0066
Receiver	023Z7013	023Z7013	023Z7007	023Z7007	023Z7007
Electrical Characteristics					
MCC Fan (A)	0.39	0.39	0.19	0.19	0.19
LRA Compressor (A)	18.5	21	21	31.5	34.5

MCC - Max Continuous Current
LRA - Locked Rotor Amps

Electrical code
E : 400V-3ph-50Hz Compressor & 230V-1ph-50Hz Fan
G : 230V-1ph-50Hz Compressor & 230V-1ph-50Hz Fan

Designation	OP-MCGC008	OP-MCGC003	OP-MCGC004	OP-MCHC004	OP-MCHC010	OP-MCHC013	OP-MCHC018	OP-MCGC010	OP-MCGC021
Compressor Description	NL8.4MF	TL3G	TL4G	TL4DL	SC10MLX	SC12MLX	SC18MLX	SC10GX	SC21MF
A00	114X0204	114X0104	114X0108	114X0301	114X0403	114X0406			114X0568
A01	114X0205	114X0105	114X0109	114X0302	114X0404	114X0407	114X0702		
A04		114X0107	114X0111	114X0303	114X0405	114X0408	114X0703	114X0223	
Condenser coil type	BG2	BG1	BG1	BG3	BG4	BG4	BG7	BG2	BG4
Electrical code	G	G	G	G	G	G	G	G	G
Refrigerant	G	G	G	H	H	H	H	G	G
Spare Parts									
Compressor single pack	195B0371	195B0340	195B0570	195B0166	195B0345	195B0351	104L2139	103G6880	104G8120
Condenser	118U0029	118U0028	118U0028	118U0030	118U0031	118U0031	118U0055	118U0029	118U0031
Dual pressure switch	-	060-5393	060-5393	060-5393	060-5393	060-5393	060-5393	060-5393	060-5393
Fan motor	118U0032	118U0032	118U0032	118U0033	118U1009	118U1009	118U1010	118U0032	118U0034
Fan guard	118U0042	118U0041	118U0041	118U0042	118U0044	118U0044	118U0407	-	118U0044
Receiver	118U0517	118U0517	118U0517	118U0523	118U0523	118U0523	118U0523	118U0517	-
Suction valve	118U0079	118U0485	118U0485	118U0485	118U0079	118U0079	118U0047	118U0079	-
Liquid valve	118U0045	118U0045	118U0045	118U0045	118U0045	118U0045	118U0045	118U0045	-
Electrical Characteristics									
LRA Compressor (A)	11.7	5.7	5.7	7.5	19.5	23.6	23.6	11.1	23.6
MCC Fan (A)	0.19	0.19	0.19	0.25	0.39	0.39	0.75	0.19	0.39

Designation	OP-MCGC021	OP-MCGC005	OP-MCGC006	OP-MCGC006	OP-MCGC007	OP-MCGC008	OP-MCGC007	OP-MCGC008	OP-MCGC011
Compressor Description	SC21G	TL5G	FR6G	NL6.1MF	FR7.5G	FR8.5G	NL7.3MF	NL8.4MF	FR11GX
A00	114X0564	114X0112	114X0200	114X0228	114X0216	114X0224	114X0244	114X0352	114X0336
A01	114X0565	114X0113	114X0201		114X0217	114X0225			114X0337
A04	114X0567	114X0115	114X0203		114X0219	114X0227			114X0339
Condenser coil type	BG4	BG1	BG2	BG2	BG2	BG2	BG2	BG2	BG3
Electrical code	G	G	G	G	G	G	G	G	G
Refrigerant	G	G	G	G	G	G	G	G	G
Spare Parts									
Compressor single pack	104G8140	102G4550	103G6660	105G6660	103G6681	103G6780	105G6772	105G6877	103G6980
Condenser	118U0031	118U0028	118U0029	118U0029	118U0029	118U0029	118U0029	118U0030	118U0030
Dual pressure switch	060-5393	060-5393	060-5393	060-5393	060-5393	060-5393	060-5393	060-5393	060-5393
Fan motor	118U0034	118U0032	118U0032	118U0032	118U0032	118U0032	118U0032	118U0033	118U0033
Fan guard	118U0044	118U0041	118U0042	118U0042	118U0042	-	118U0042	118U0043	118U0043
Receiver	118U0523	118U0517	118U0517	-	118U0517	118U0517	-	-	118U0523
Suction valve	118U0047	118U0485	118U0079	-	118U0079	118U0079	-	-	118U0079
Liquid valve	118U0045	118U0045	118U0045	-	118U0045	118U0045	-	-	118U0045
Electrical Characteristics									
LRA Compressor (A)	21.8	5.7	7.5	9.2	8.1	8.2	11.3	11.7	10
MCC Fan (A)	0.39	0.19	0.19	0.19	0.19	0.19	0.19	0.19	0.25

Designation	OP-MCGC012	OP-MCGC015	OP-MCGC018	OP-MCGC026	OP-MCGC034	OP-MCHC006	OP-MCHC015	OP-MCHC007	OP-MCHC021
Compressor Description	SC12GX	SC15GX	SC18G	GS26MFX	GS34MFX	FR6DLX	SC15MLX	NF7MLX	GS21MLX
A00	114X0340	114X0448	114X0556			114X2316		114X2424	114X2765
A01	114X0341	114X0449	114X0557	114X0773	114X0781	114X2317	114X2649	114X2425	
A04	114X0343	114X0451	114X0559			114X2319	114X2651	114X2427	114X2767
Condenser coil type	BG3	BG4	BG4/5	BG7	BG7	BG3	BG6	BG4	BG7
Electrical code	G	G	G	G	G	G	G	G	G
Refrigerant	G	G	G	G	G	H	H	H	H
Spare Parts									
Compressor single pack	104G8240	104G8525	195B0548	107B0700	107B0701	103U2680	104L2869	105F3721	107B0502
Condenser	118U0030	118U0031	118U0031	118U0069	118U0069	118U0030	118U0068	118U0031	118U0069
Dual pressure switch	060-5393	060-5393	060-5393	060-5393	060-5393	060-5393	060-5393	060-5393	060-5393
Fan motor	118U0033	118U0034	118U0034	118U0058	118U0058	118U0033	118U0035	118U0034	118U0058
Fan guard	-	-	-	-	-	118U0043	118U0066	118U0044	-
Receiver	118U0523	118U0523	118U0523	-	-	118U0523	118U0523	118U0523	-
Suction valve	118U0079	118U0079	118U0079	118U0079	118U0047	118U0079	118U0047	118U0079	118U0079
Liquid valve	118U0045	118U0045	118U0045	118U0045	118U0045	118U0045	118U0045	118U0045	118U0079
Electrical Characteristics									
LRA Compressor (A)	12.6	14.8	20.4	20.2	25.7	10	23.5	20	24.4
MCC Fan (A)	0.25	0.39	0.39	0.75	0.75	0.25	0.48	0.39	0.75

MCC - Max Continuous Current
LRA - Locked Rotor Amps
Electrical code
E : 400V-3ph-50Hz Compressor & 230V-1ph-50Hz Fan
G : 230V-1ph-50Hz Compressor & 230V-1ph-50Hz Fan

Designation	OP-LCQN048	OP-LCQN048	OP-LCQN068	OP-LCQN068	OP-LCQN096	OP-LGQN096
Code Number	114X5758	114X5759	114X5761	114X5762	114X5764	114X5766
Compressor Description	NTZ048-4B	NTZ048-5B	NTZ068-4B	NTZ068-5B	NTZ096-4B	NTZ096-4B
Condenser coil type	A7	A7	D7	D7	G7	N8
Electrical Code	E	G	E	G	E	E
Refrigerant	Q	Q	Q	Q	Q	Q
Oil	175PZ - POE	175PZ - POE	175PZ - POE	175PZ - POE	175PZ - POE	175PZ - POE
Version	A02	A02	A02	A02	A02	A02
Spare Parts						
Compressor single pack	120F0226	120F0228	120F0230	120F0232	120F0234	120F0234
Condenser	118U3492	118U3492	118U3493	118U3493	118U3494	118U1004
Crankcase heater	120Z0459	120Z0459	120Z0459	120Z0459	120Z0459	120Z0459
Dual pressure switch	060-539766	060-539766	060-539766	060-539766	060-539766	060-539766
Fan assembly	118U0390	118U0390	118U0391	118U0391	118U0392	118U0390
Filter drier type	023Z4562	023Z4562	023Z4562	023Z4562	023Z4562	023Z4562
Receiver	8168179	8168179	8168180	8168180	8168181	8168181
Rotalock valve discharge	7968012	7968012	7968013	7968013	7968013	7968013
Rotalock valve suction	7968014	7968014	7968014	7968014	7968016	7968016
Sight glass	014-0182	014-0182	014-0183	014-0183	014-0183	014-0183
Discharge gas thermostat	7750009	7750009	7750009	7750009	7750009	7750009
Fan speed controller	061H3144	061H3144	061H3144	061H3144	061H3144	061H3144
Electrical Characteristics						
MCC Compressor (A)	4.8	11	8.4	17	10.1	10.1
LRA compressor (A)	16	37	25	53	32	32
MCC Fan (A)	0.43	0.43	0.82	0.82	1.22	2 X 0.43
Fan power (W)	75	75	155	155	220	2 X 75

Designation	OP-LCQN108	OP-LGQN108	OP-LGQN136	OP-LCQN136	OP-LGQN215	OP-LGQN271
Code Number	114X5768	114X5769	114X5771	114X5772	114X5774	114X5776
Compressor Description	NTZ108-4B	NTZ108-4B	NTZ136-4B	NTZ136-4B	NTZ215-4B	NTZ271-4B
Condenser coil type	G7	N8	N8	G7	J7	J7
Electrical Code	E	E	E	E	E	E
Refrigerant	Q	Q	Q	Q	Q	Q
Oil	175PZ - POE	175PZ - POE	175PZ - POE	175PZ - POE	175PZ - POE	175PZ - POE
Version	A02	A02	A02	A02	A02	A02
Spare Parts						
Compressor single pack	120F0238	120F0238	120F0236	120F0236	120F0240	120F0242
Condenser	118U3494	118U1004	118U1004	118U3494	118U3717	118U3717
Crankcase heater	120Z0459	120Z0459	120Z0459	120Z0459	120Z0459	120Z0459
Dual pressure switch	060-539766	060-539766	060-539766	060-539766	060-539766	060-539766
Fan assembly	118U0392	118U0390	118U0390	118U0392	118U0393	118U0393
Filter drier type	023Z4562	023Z4562	023Z4562	023Z4562	023Z4581	023Z4581
Receiver	8168181	8168181	8168181	8168181	8168183	8168183
Rotalock valve discharge	7968013	7968013	7968013	7968013	7968014	7968014
Rotalock valve suction	7968016	7968016	7968016	7968016	7968018	7968018
Sight glass	014-0183	014-0183	014-0183	014-0183	014-0184	014-0184
Discharge gas thermostat	7750009	7750009	7750009	7750009	7750009	7750009
Fan speed controller	061H3144	061H3144	061H3144	061H3144	061H3144	061H3144
Electrical Characteristics						
MCC Compressor (A)	12.1	12.1	14.3	14.3	22.3	27
LRA compressor (A)	45	45	51	51	74	96
MCC Fan (A)	1.22	2 X 0.43	2 X 0.43	1.22	2 X 2.23	2 X 2.23
Fan power (W)	220	2 X 75	2 X 75	220	2 X 390	2 X 390

MCC - Max Continuous Current
LRA - Locked Rotor Amps
FSC - Fan Speed Controller

Electrical code
E : 400V-3ph-50Hz Compressor & 230V-1ph-50Hz Fan
G : 230V-1ph-50Hz Compressor & 230V-1ph-50Hz Fan

Designation	OP-MCRN030	OP-MCRN030	OP-MCRN038	OP-MCRN038	OP-MCRN048	OP-MCRN048	OP-MCRN054	OP-MCRN054	OP-MCRN060
Code Number	114X5721	114X5722	114X5723	114X5724	114X5726	114X5728	114X5729	114X5731	114X5732
Compressor Description	MTZ018-4	MTZ018-5	MTZ022-5	MTZ022-4	MTZ028-4	MTZ028-5	MTZ032-4	MTZ032-5	MTZ036-4
Condenser coil type	A7	A7	A7	A7	D7	D7	D7	D7	D7
Electrical Code	E	G	G	E	E	G	E	G	E
Refrigerant	R	R	R	R	R	R	R	R	R
Oil	175PZ - POE	175PZ - POE	175PZ - POE	175PZ - POE	175PZ - POE	175PZ - POE	175PZ - POE	175PZ - POE	175PZ - POE
Version	A02	A02	A02	A02	A02	A02	A02	A02	A02
Spare Parts									
Compressor single pack	MTZ18-4VI	MTZ18-5VI	MTZ22-5VI	MTZ22-4VI	MTZ28-4VI	MTZ28-5VI	MTZ32-4VI	MTZ32-5VI	MTZ36-4VI
Condenser	118U3492	118U3492	118U3492	118U3492	118U3493	118U3493	118U3493	118U3493	118U3493
Crankcase heater	120Z0459	120Z0459	120Z0459	120Z0459	120Z0459	120Z0459	120Z0459	120Z0459	120Z0459
Dual pressure switch	060-539766	060-539766	060-539766	060-539766	060-539766	060-539766	060-539766	060-539766	060-539766
Fan assembly	118U0390	118U0390	118U0390	118U0390	118U0391	118U0391	118U0391	118U0391	118U0392
Filter drier type	023Z4562	023Z4562	023Z4562	023Z4562	023Z4572	023Z4572	023Z4572	023Z4572	023Z4572
Receiver	8168179	8168179	8168179	8168179	8168180	8168180	8168180	8168180	8168180
Rotalock valve discharge	7968012	7968012	7968012	7968012	7968013	7968013	7968013	7968013	7968013
Rotalock valve suction	7968013	7968013	7968013	7968013	7968013	7968013	7968014	7968014	7968014
Sight glass	014-0182	014-0182	014-0182	014-0182	014-0183	014-0183	014-0183	014-0183	014-0183
Discharge gas thermostat	7750009	7750009	7750009	7750009	7750009	7750009	7750009	7750009	7750009
Fan speed controller	061H3144	061H3144	061H3144	061H3144	061H3144	061H3144	061H3144	061H3144	061H3144
Electrical Characteristics									
MCC Compressor (A)	5	10	15	6	7.5	20	8	20	9
LRA compressor (A)	20	40	41	20	29	51	25	70	38
MCC Fan (A)	0.43	0.43	0.43	0.43	0.82	0.82	0.82	0.82	1.22
Fan power (W)	75	75	75	75	155	155	155	155	220

Designation	OP-MCRN060	OP-MCRN068	OP-MCRN086	OP-MCRN096	OP-MCRN108	OP-MGRN108	OP-MCRN121	OP-MGRN121	OP-MCRN136M
Code Number	114X5734	114X5735	114X5737	114X5739	114X5740	114X5743	114X5744	114X5746	114X5747
Compressor Description	MTZ036-5	MTZ040-4	MTZ050-4	MTZ056-4	MTZ064-4	MTZ064-4	MTZ072-4	MTZ072-4	MTZ080-4
Condenser coil type	D7	G7	G7	G7	G7	N8	G7	N8	G7
Electrical Code	G	E	E	E	E	E	E	E	E
Refrigerant	R	R	R	R	R	R	R	R	R
Oil	175PZ - POE	175PZ - POE	175PZ - POE	175PZ - POE	175PZ - POE	175PZ - POE	175PZ - POE	175PZ - POE	175PZ - POE
Version	A02	A02	A02	A02	A02	A02	A02	A02	A02
Spare Parts									
Compressor single pack	MTZ36-5VI	MTZ40-4VI	MTZ50-4VI	MTZ56-4VI	MTZ64-4VI	MTZ64-4VI	MTZ72-4VI	MTZ72-4VI	MTZ80-4VI
Condenser	118U3493	118U3494	118U3494	118U3494	118U3494	118U1004	118U3494	118U1004	118U3494
Crankcase heater	120Z0459	120Z0459	120Z0459	120Z0459	120Z0459	120Z0459	120Z0459	120Z0459	120Z0459
Dual pressure switch	060-539766	060-539766	060-539766	060-539766	060-539766	060-539766	060-539766	060-539766	060-539766
Fan assembly	118U0392	118U0392	118U0392	118U0392	118U0392	118U0390	118U0392	118U0390	118U0392
Filter drier type	023Z4572	023Z4572	023Z4572	023Z4572	023Z4572	023Z4572	023Z4572	023Z4572	023Z4572
Receiver	8168180	8168181	8168181	8168181	8168181	8168181	8168181	8168181	8168181
Rotalock valve discharge	7968013	7968013	7968013	7968013	7968013	7968013	7968013	7968013	7968013
Rotalock valve suction	7968014	7968014	7968017	7968017	7968017	7968017	7968018	7968018	7968018
Sight glass	014-0183	014-0183	014-0183	014-0183	014-0183	014-0183	014-0183	014-0183	014-0183
Discharge gas thermostat	7750009	7750009	7750009	7750009	7750009	7750009	7750009	7750009	7750009
Fan speed controller	061H3144	061H3144	061H3144	061H3144	061H3144	061H3144	061H3144	061H3144	061H3144
Electrical Characteristics									
MCC Compressor (A)	22	10	12	12.5	13.5	13.5	17.5	17.5	18.5
LRA compressor (A)	60	38	47	64	64	64	80	80	80
MCC Fan (A)	1.22	1.22	1.22	1.22	1.22	2 X 0.43	1.22	2 X 0.43	1.22
Fan power (W)	220	220	220	220	220	2 X 75	220	2 X 75	220

MCC - Max Continuous Current
LRA - Locked Rotor Amps
FSC - Fan Speed Controller

Electrical code
E : 400V-3ph-50Hz Compressor & 230V-1ph-50Hz Fan
G : 230V-1ph-50Hz Compressor & 230V-1ph-50Hz Fan

Designation	OP-MGRN136M	OP-MGRN171	OP-MGRN215	OP-MGRN242	OP-MGRN271
Code Number	114X5749	114X5750	114X5753	114X5754	114X5757
Compressor Description	MTZ080-4	MTZ100-4	MTZ125-4	MTZ144-4	MTZ160-4
Condenser coil type	N8	J7	J7	J7	J7
Electrical Code	E	E	E	E	E
Refrigerant	R	R	R	R	R
Oil	175PZ - POE	175PZ - POE	175PZ - POE	175PZ - POE	175PZ - POE
Version	A02	A02	A02	A02	A02
Spare Parts					
Compressor single pack	MTZ80-4VI	MTZ100-4VI	MTZ125-4VI	MTZ144-4VI	MTZ160-4VI
Condenser	118U1004	118U3717	118U3717	118U3717	118U3717
Crankcase heater	120Z0459	120Z0459	120Z0459	120Z0459	120Z0459
Dual pressure switch	060-539766	060-539766	060-539766	060-539766	060-539766
Fan assembly	118U0390	118U0393	118U0393	118U0393	118U0393
Filter drier type	023Z4572	023Z4581	023Z4581	023Z4581	023Z4581
Receiver	8168181	8168183	8168183	8168183	8168183
Rotalock valve discharge	7968013	7968014	7968014	7968014	7968014
Rotalock valve suction	7968018	7968018	7968018	7968018	7968018
Sight glass	014-0183	014-0184	014-0184	014-0184	014-0184
Discharge gas thermostat	7750009	7750009	7750009	7750009	7750009
Fan speed controller	061H3144	061H3144	061H3144	061H3144	061H3144
Electrical Characteristics					
MCC Compressor (A)	18.5	22	27	36	36
LRA compressor (A)	80	90	105	130	130
MCC Fan (A)	2 X 0.43	2 X 2.23	2 X 2.23	2 X 2.23	2 X 2.23
Fan power (W)	2 X 75	2 X 390	2 X 390	2 X 390	2 X 390

MCC - Max Continuous Current
LRA - Locked Rotor Amps
FSC - Fan Speed Controller

Electrical code
E : 400V-3ph-50Hz Compressor & 230V-1ph-50Hz Fan
G : 230V-1ph-50Hz Compressor & 230V-1ph-50Hz Fan

Component type	Component code	Component description	Additional informations
Compressor single pack	195B0481	SERVICE-Kit NL8.4CLX	
Compressor single pack	195B0640	Service-KIT SC21CL COMPRESSOR	
Compressor single pack	195B0032	KIT FR6DLX COMPRESSOR	
Compressor single pack	195B0038	KIT FR8,5CLX COMPRESSOR	
Compressor single pack	195B0501	SERVICE-Kit GS 26CLX	
Compressor single pack	102U2071	TL4CL COMPRESSOREN	
Compressor single pack	105F3710	NL7CLX COM	
Compressor single pack	104L2697	SC12CLX.2 LBP	
Compressor single pack	104L2854	SC15CLX LBP	
Compressor single pack	107B0501	GS34CLX COMPRESSOR	
Compressor single pack	104L2123	SC18CL LBP/MBP	
Compressor single pack	123B2106	Spare part, MLY45LAb	
Compressor single pack	123B2110	Spare part, MLY60LAb	
Compressor single pack	123G2114	MLY80LAB SINGLE PACK	
Compressor single pack	123B2120	MLY12LAb SINGLE PACK	
Compressor single pack	123B2123	Spare part, MPT12LA	
Compressor single pack	123B2126	Compresseur MPT14LA pour LSQM014G	
Compressor single pack	195B0371	Kit NL 8.4MF	
Compressor single pack	195B0166	KIT TL4DLX COMPRESSOR	
Compressor single pack	195B0345	Kit SC10MLX	
Compressor single pack	195B0351	SERVICE-Kit SC12MLX	
Compressor single pack	104L2139	Spare part, SC18MLX	
Compressor single pack	103G6880	Spare part, FR10G	
Compressor single pack	104G8120	Spare part, SC21MFX	
Compressor single pack	104G8140	Spare part, SC21G	
Compressor single pack	102G4550	Spare part, TL5G	
Compressor single pack	103G6660	FR6G Universal R134a	
Compressor single pack	105G6660	NL6.1MF Std. R134A	
Compressor single pack	103G6681	FR7,5G COMPRESSOR	
Compressor single pack	103G6780	FR8,5G COMPRESSOR	
Compressor single pack	105G6772	NL7,3 MF COMPRESSOR	
Compressor single pack	105G6877	COMPRESSOR NL8.4MF	
Compressor single pack	103G6980	FR11G COMPRESSOR	
Compressor single pack	104G8240	SC12G Universal R134A	
Compressor single pack	104G8525	Spare part, SC15G	
Compressor single pack	107B0700	Spare part, GS26MFX	
Compressor single pack	107B0701	Spare part, GS34MFX	
Compressor single pack	103U2680	FR6DL COMPRESSOR 404A	
Compressor single pack	104L2869	Spare part, SC15MLX	
Compressor single pack	105F3721	Spare part, NF7MLX	
Compressor single pack	107B0502	GS21MLX Compressor	
Compressor single pack	195B0548	Spare part, SC18G 220V 50HZ R 134A	
Compressor single pack	195B0340	Spare part, TL3G	
Compressor single pack	195B0570	Spare part, TL4G	
Compressor single pack	123F8310	NBC30RA; 220-240V 50Hz	
Compressor single pack	123B3505	NLY45RAb/ 220-240V 50Hz	
Compressor single pack	123B3507	NLY60RAb/ 220-240V 50Hz	
Compressor single pack	123B3511	NLY80RAB/ 220-240V 50HZ	
Compressor single pack	123B3513	NLY90RAb/ 220-240V 50Hz	
Compressor single pack	123F3530	NLY12RAb; 220-240V 50Hz	
Compressor single pack	123F3703	NPT14RA/ 220-240V 50Hz	
Compressor single pack	123F3712	NPT16RA; 220-240V 50Hz	
Compressor single pack	123F3514	NX18TBa / 220-240V 50Hz	
Compressor single pack	123B3515	NX21TBa/ 220-240V 50Hz	
Compressor single pack	123B3103	NLY45LAb/ 220-240V 50Hz	
Compressor single pack	123B3107	NLY60LAb/ 220-240V 50Hz	
Compressor single pack	123B3115	NLY80LAB/ 220-240V 50HZ	
Compressor single pack	123B3121	NPY12LAb/ 220-240V 50Hz	
Compressor single pack	123B3124	NPT16LA/ 220-240V 50Hz	
Compressor single pack	123B3128	NX23FBa/ 220-240V 50Hz	
Compressor single pack	123F3167	NS34FB; 220-240V 50Hz	
Condenser	118U0030	CONDENSER COIL BG3	
Condenser	118U0054	CONDENSER COIL BG6	
Condenser	118U0029	CONDENSER COIL BG2	
Condenser	118U0031	CONDENSER COIL BG4/5	
Condenser	118U0069	CONDENSER COIL BG7 GS	
Condenser	118U0028	CONDENSER COIL BG1	
Condenser	118U0029	CONDENSER COIL BG2	
Condenser	118U0055	CONDENSER COIL BG7	
Condenser	118U0030	CONDENSER COIL BG3	
Condenser	118U0031	CONDENSER COIL BG4/5	
Condenser	118U0054	CONDENSER COIL BG6	

Component type	Component code	Component description	Additional informations
Fan motor	118U1010	Spare part, Fan motor EC 25-25	
Fan motor	118U0032	FAN MOTOR 5 WATT	
Fan motor	118U0033	FAN MOTOR 11 WATT	
Fan motor	118U0058	FAN MOTOR 25 WATT	
Fan motor	118U0034	FAN MOTOR 16 WATT	
Fan motor	118U1009	Spare part, Fan motor EC 20-25	
Fan motor	118U0035	FAN MOTOR 18 WATT	
Fan motor	118U1008	Spare part, Fan motor EC 12-10	
Fan motor	118U1009	Spare part, Fan motor EC 20-25	
Fan motor	118U1010	Spare part, Fan motor EC 25-25	
Fan guard	118U0043	FAN COWL BG3	
Fan guard	118U0066	FAN COWL BG6	
Fan guard	118U0042	FAN COWL BG2	
Fan guard	118U0044	FAN COWL BG4/5	
Fan guard	118U0042	FAN COWL BG2	
Fan guard	118U0043	FAN COWL BG3	
Fan guard	118U0407	FAN COWL BG7	
Fan guard	118U0067	FAN COWL BG7	
Fan guard	118U0042	FAN COWL BG2	
Fan guard	118U0043	FAN COWL BG3	
Fan guard	118U0044	FAN COWL BG4/5	
Fan guard	118U0066	FAN COWL BG6	
Receiver	118U0523	LIQUID RECEIVER 1100 CCM (TUEV)	
Receiver	118U0517	LIQUID RECEIVER 800 CCM (TUEV)	
Receiver	023Z7012	Receiver filter drier DMC 0432S/6mm I/16	
Receiver	023Z7013	Receiver filter drier DMC 0732S I/16	
Receiver	023Z7007	Receiver filter drier DMC 2033S I/10	
Suction valve	118U0079	Spare part, Valve	
Suction valve	118U0047	S-VALVE 10/10	
Suction valve	118U0485	SAUGVENTIL 6/6MM + KP-ANSCHLUSS (Stahl)	
Liquid valve	118U0045	L-VALVE 6/6	
Liquid valve	118U0079	Spare part, Valve	
Pressure switch - HP	061F6701	ACB Pressure switch - HP	
Pressure switch - LP	061F7958	ACB Pressure switch - LP	
Pressure switch - LP	061F7959	ACB Pressure switch - LP	

Component type	Component code	Component description	Additional informations
Compressor single pack	MTZ18-4VI	MTZ18-4VI, COMP OSG-EQUAL MULTIREF	
Compressor single pack	MTZ18-5VI	MTZ18-5VI, COMPRESSOR VERSION EGALISATION	
Compressor single pack	MTZ22-5VI	MTZ22-5VI, COMPRESSOR VERSION EGALISATION	
Compressor single pack	MTZ22-4VI	MTZ22-4VI, COMP OSG-EQUAL MULTIREF	
Compressor single pack	MTZ28-4VI	MTZ28-4VI, COMP OSG-EQUAL MULTIREF	
Compressor single pack	MTZ28-5VI	MTZ28-5VI, COMP OSG-EQUAL MULTIREF	
Compressor single pack	MTZ32-4VI	MTZ32-4VI, COMP OSG-EQUAL MULTIREF	
Compressor single pack	MTZ32-5VI	MTZ32-5VI, COMP OSG-EQUAL MULTIREF	
Compressor single pack	MTZ36-4VI	Compressor MTZ36-5VI	
Compressor single pack	MTZ36-5VI	MTZ36-5VI, COMP OSG-EQUAL MULTIREF	
Compressor single pack	MTZ40-4VI	MTZ40-4VI, COMP OSG-EQUAL MULTIREF	
Compressor single pack	MTZ50-4VI	MTZ50-4VI, COMP OSG-EQUAL MULTIREF	
Compressor single pack	MTZ56-4VI	MTZ56-4VI, COMP OSG-EQUAL MULTIREF	
Compressor single pack	MTZ64-4VI	MTZ64-4VI, COMP OSG-EQUAL MULTIREF	
Compressor single pack	MTZ72-4VI	MTZ72-4VI, COMP OSG-EQUAL MULTIREF	
Compressor single pack	MTZ80-4VI	MTZ80-4VI, COMP OSG-EQUAL MULTIREF	
Compressor single pack	MTZ100-4VI	MTZ100-4VI, COMP OSG-EQUAL MULTIREF	
Compressor single pack	MTZ125-4VI	MTZ125-4VI, COMP OSG-EQUAL MULTIREF	
Compressor single pack	MTZ144-4VI	MTZ144-4VI, COMP OSG-EQUAL MULTIREF	
Compressor single pack	MTZ160-4VI	MTZ160-4VI, COMP OSG-EQUAL MULTIREF	
Compressor single pack	120F0226	NTZ048-4LR1-SINGLE	
Compressor single pack	120F0228	NTZ048-5LR1-SINGLE	
Compressor single pack	120F0230	NTZ068-4LR1-SINGLE	
Compressor single pack	120F0232	NTZ068-5LR1-SINGLE	
Compressor single pack	120F0234	NTZ096-4LR1-SINGLE	
Compressor single pack	120F0238	NTZ108-4LR1-SINGLE	
Compressor single pack	120F0236	NTZ136-4LR1- RECIP	
Compressor single pack	120F0240	NTZ215-4LR1-SINGLE RECIP COMP	
Compressor single pack	120F0242	NTZ271-4LR1-SINGLE RECIP COMP	
Condenser	118U3492	CONDENSER COIL MCHX A7	
Condenser	118U3493	CONDENSER COIL MCHX D7	
Condenser	118U3494	CONDENSER COIL MCHX G7	
Condenser	118U1004	CONDENSER COIL MCHX N8	
Condenser	118U3717	Spare Part H4 MCHX	
Crankcase heater	120Z0459	PTC Crankcase heater	
Dual pressure switch	060-127466	KP17B Switch	
Dual pressure switch	060-539766	KP17WB Switch	
Fan assembly	118U0390	Fan assembly Ø350- 6 Pole, 230/1/50-60	
Fan assembly	118U0391	Fan assembly Ø450-6 Pole, 230/1/50-60	
Fan assembly	118U0392	Fan assembly Ø500-6 Pole, 230/1/50-60	
Fan assembly	118U0393	Fan assembly Ø560-6 Pole, 230/1/50-60	
Discharge gas thermostat	7750009	DISCHARGE THERMOSTAT KIT	
Fan speed controller	061H3144	XGE-2C	
Filter drier (Multipack)	023Z4562	DML053S	
Filter drier (Multipack)	023Z4572	DML084S	
Filter drier (Multipack)	023Z4581	DML165S	
Oil	120Z0638	LUBRICANT 175PZ-1L CAN	
Oil	120Z0639	LUBRICANT 175PZ-2.5L CAN	
Receiver	8168179	LIQUID RECEIVER 3L R032	
Receiver	8168180	LIQUID RECEIVER 6L R061	
Receiver	8168181	LIQUID RECEIVER 8L R076	
Receiver	8168183	LIQUID RECEIVER 14L R141	
Rotalock valve discharge	7968012	ROTALOCK valve 1" - 3/8"	
Rotalock valve discharge	7968013	ROTALOCK VALVE 1" - 1/2"	
Rotalock valve discharge	7968014	ROTALOCK VALVE 1 1/4" - 5/8"	
Rotalock valve suction	7968017	ROTALOCK VALVE 1 3/4" - 7/8"	
Rotalock valve suction	7968018	ROTALOCK valve 1+3/4" - 1+1/8"	
Sight glass (Multipack)	014-0182	SGN10s	
Sight glass (Multipack)	014-0183	SGN12s	
Sight glass (Multipack)	014-0184	SGN16s	

Chassis
1 2
3 4

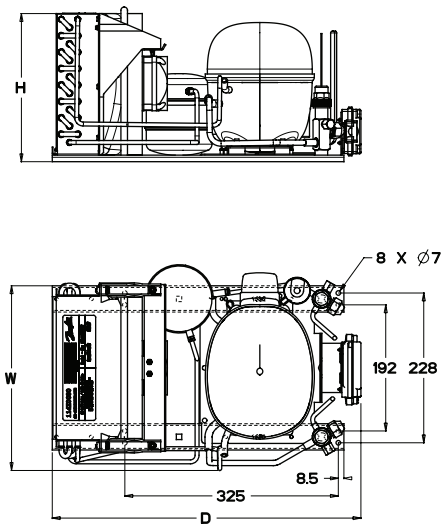

Chassis
5 6 7

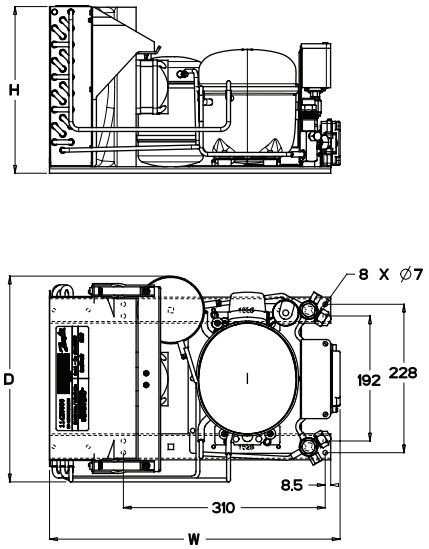

Chassis
8 9 10

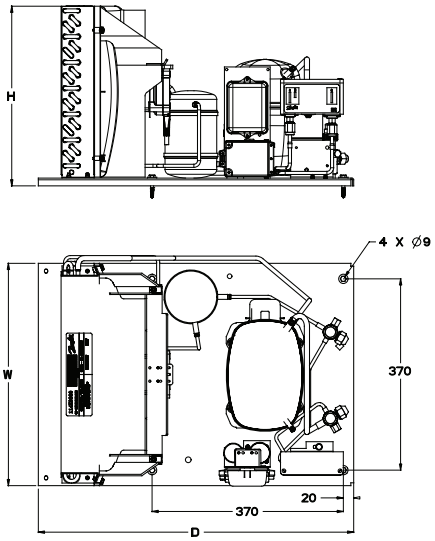

Chassis
11 12
13 14

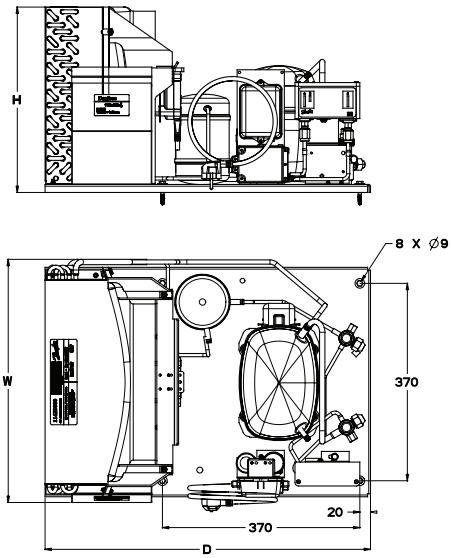

Chassis A (Single Fan)

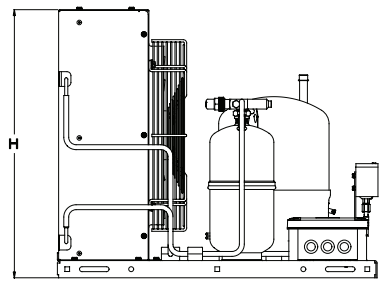

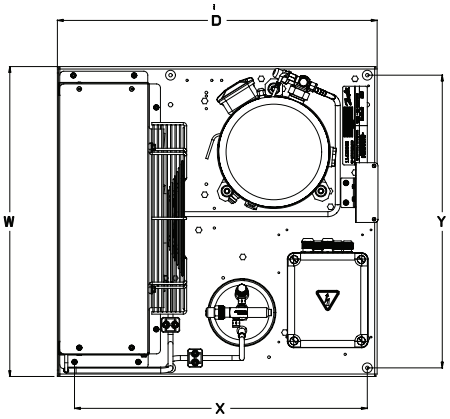

S.No	Application	Description	Units	Compressor	H	W	D	X	Y
1	MBP	OP-MCRN030MTA02E	114X5721	MTZ018	545	630	650	400	595
2	MBP	OP-MCRN030MTA02G	114X5722						
3	MBP	OP-MCRN038MTA02G	114X5723	MTZ022					
4	MBP	OP-MCRN038MTA02E	114X5724						
5	LBP	OP-LCQN048NTA02E	114X5758	NTZ048					
6	LBP	OP-LCQN048NTA02G	114X5759						

Chassis B (Two Fan)

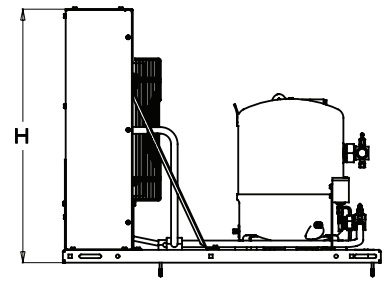

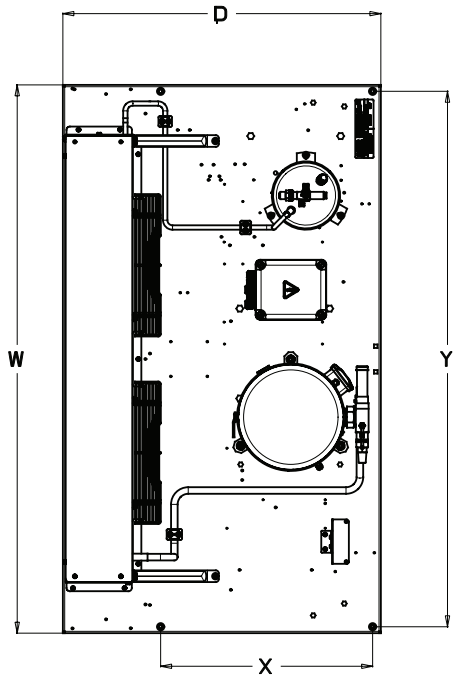

S.No	Application	Description	Units	Compressor	H	W	D	X	Y
1	MBP	OP-MGRN108MTA02E	114X5743	MTZ064	693.5	1500	870	580	1465
2	MBP	OP-MGRN121MTA02E	114X5746	MTZ072					
3	MBP	OP-MGRN136MTA02E	114X5749	MTZ080					
4	LBP	OP-LGQN096NTA02E	114X5766	NTZ096					
5	LBP	OP-LGQN108NTA02E	114X5769	NTZ108					
6	LBP	OP-LGQN136NTA02E	114X5771	NTZ136					

Chassis C (Single Fan)

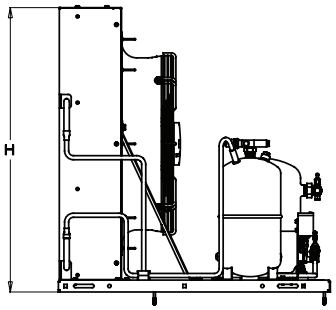

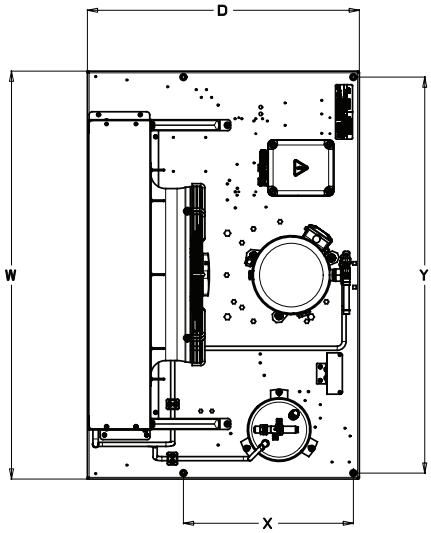

S.No	Application	Description	Units	Compressor	H	W	D	X	Y
1	MBP	OP-MCRN048MTA02E	114X5726	MTZ028	705	900	900	600	865
2	MBP	OP-MCRN048MTA02G	114X5728						
3	MBP	OP-MCRN054MTA02E	114X5729	MTZ032					
4	MBP	OP-MCRN054MTA02G	114X5731						
5	MBP	OP-MCRN060MTA02E	114X5732	MTZ036					
6	MBP	OP-MCRN060MTA02G	114X5734						
7	LBP	OP-LCQN068NTA02E	114X5761	NTZ068					
8	LBP	OP-LCQN068NTA02G	114X5762						

Chassis D (Single Fan)

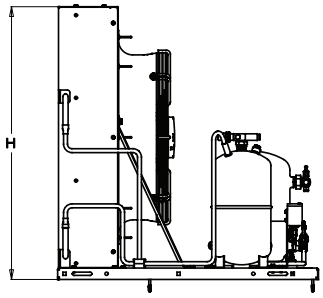

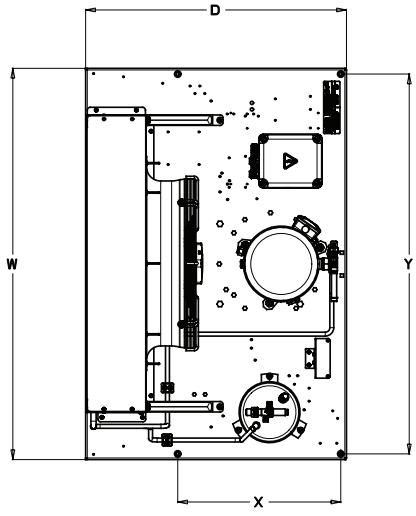

S.No	Application	Description	Units	Compressor	H	W	D	X	Y
1	MBP	OP-MCRN068MTA02E	114X5735	MTZ040	836.5	1200	800	500	1165
2	MBP	OP-MCRN086MTA02E	114X5737	MTZ050					
3	MBP	OP-MCRN096MTA02E	114X5739	MTZ056					
4	MBP	OP-MCRN108MTA02E	114X5740	MTZ064					
5	MBP	OP-MCRN121MTA02E	114X5744	MTZ072					
6	MBP	OP-MCRN136MTA02E	114X5747	MTZ080					
7	LBP	OP-LCQN096NTA02E	114X5764	NTZ096					
8	LBP	OP-LCQN108NTA02E	114X5768	NTZ108					
9	LBP	OP-LCQN136NTA02E	114X5772	NTZ136					

Chassis E (Two Fan)

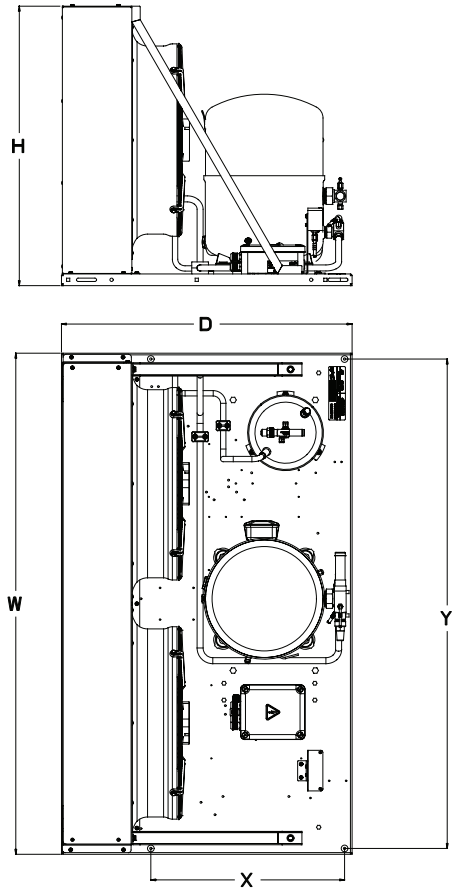

S.No	Application	Description	Units	Compressor	H	W	D	X	Y
1	MBP	OP-MGRN171MTA02E	114X5750	MTZ100	836.5	1500	870	580	1465
2	MBP	OP-MGRN215MTA02E	114X5753	MTZ125					
3	MBP	OP-MGRN242MTA02E	114X5754	MTZ144					
4	MBP	OP-MGRN271MTA02E	114X5757	MTZ160					
5	LBP	OP-LGQN215NTA02E	114X5774	NTZ215					
6	LBP	OP-LGQN271NTA02E	114X5776	NTZ271					

Compressor range: NS34

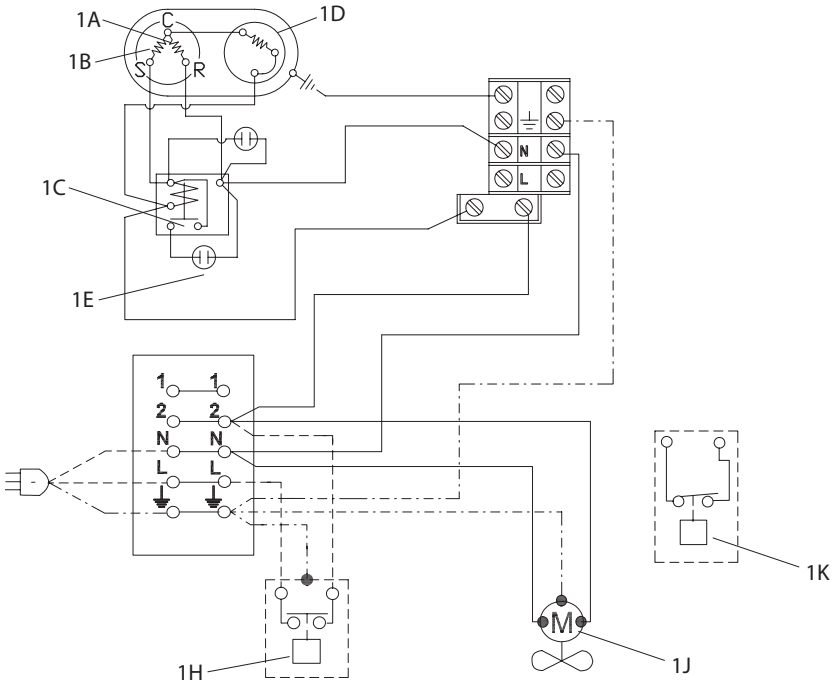

Compressor range: NL and NP and NX

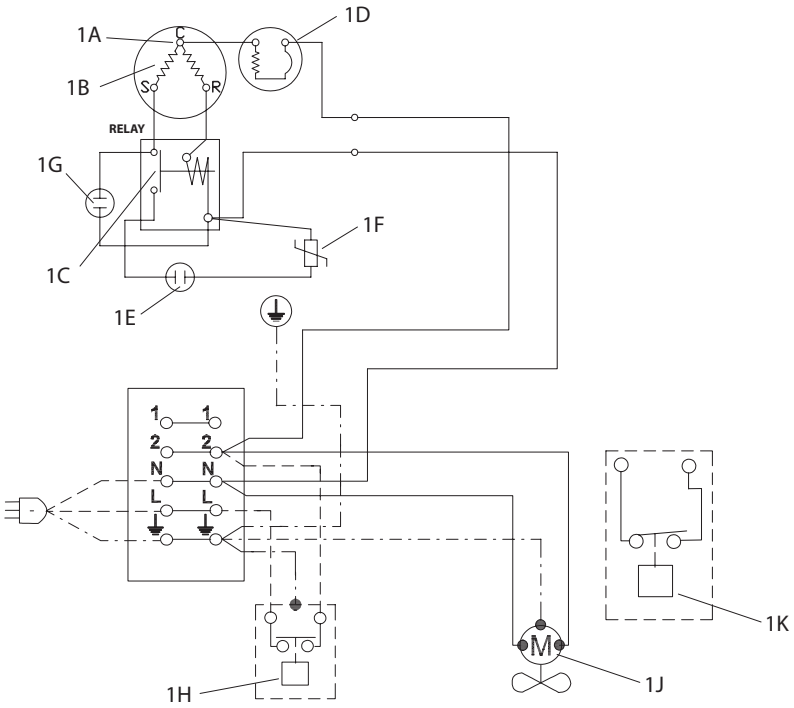

1A - Main winding
1B - Start winding
1C - Start relay
1D - Winding protector
1E - Start capacitor
1F - Bleeder resistance
1G - Run capacitor
1H - Thermostat
1J - Fan
1K - Pressure control

Compressor range: NBC30

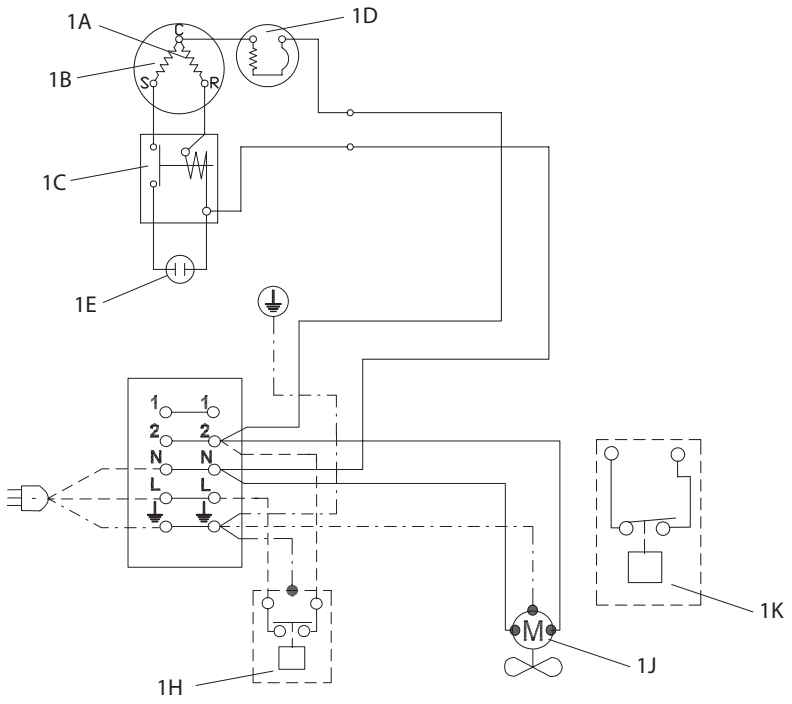

1A - Main winding
1B - Start winding
1C - Start relay
1D - Winding protector
1E - Start capacitor
1F - Bleeder resistance
1G - Run capacitor
1H - Thermostat
1J - Fan
1K - Pressure control

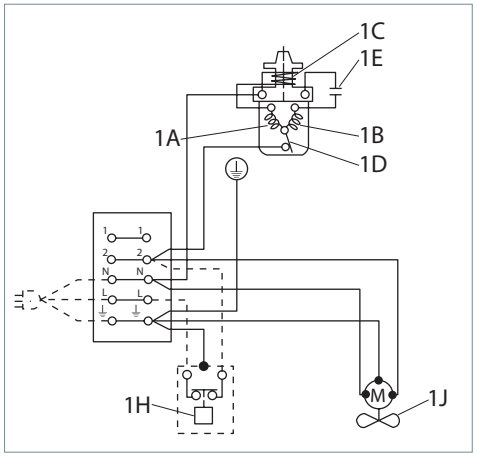

For compressor:
- **NL8,4CLX**
- **NL8,4MF**
- **TL4DL**
- **SX10MLX**
- **SC12MLX**

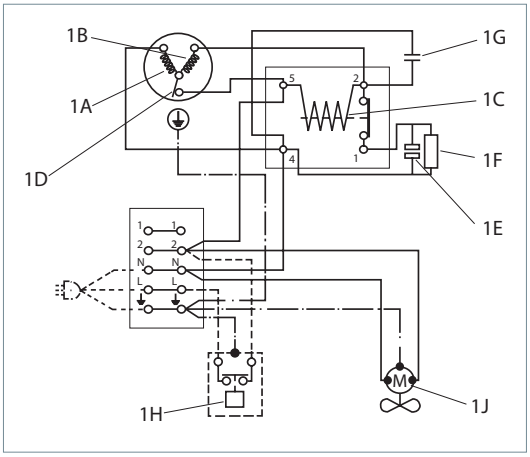

For compressor:
- **SC18MLX**
- **SC21CL**
- **SC18CL**

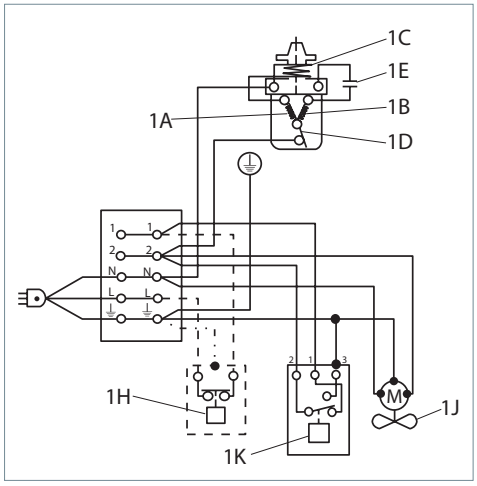

For compressor:
- **TL4DL**
- **SC10MLX**
- **SC12MLX**
- **NL8,4CLX**

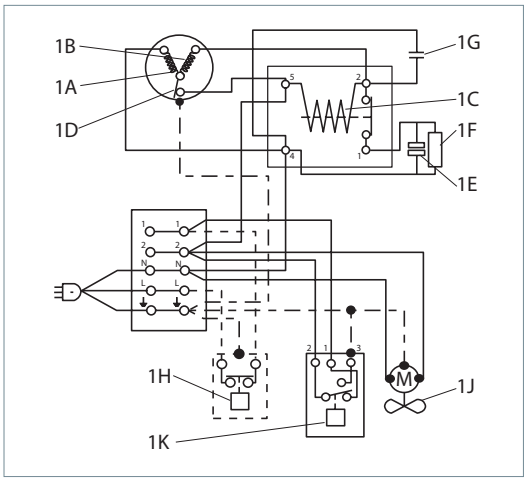

For compressor:
- **SC18MLX**
- **SC21CL**

1A - Main winding
1B - Start winding
1C - Start relay
1D - Winding protector
1E - Start capacitor
1F - Bleeder resistance
1G - Run capacitor
1H - Thermostat
1J - Fan
1K - Pressure control

Single Phase models

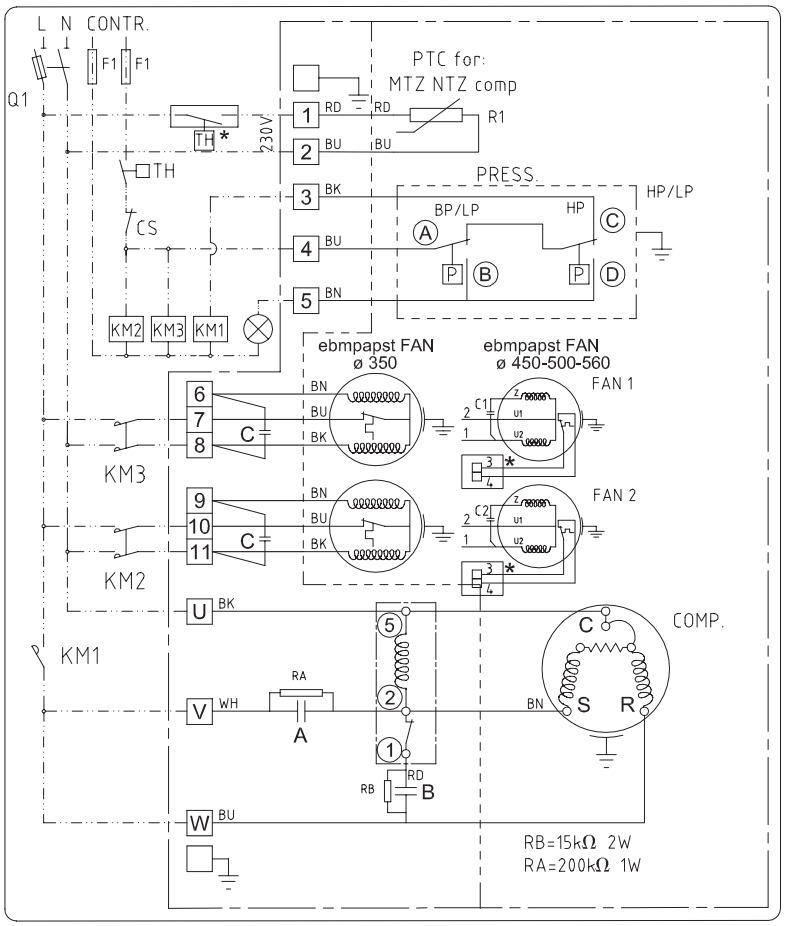

BK: BLACK BU: BLUE
BN: BROWN WH: WHITE
RD: RED GY:GREY
One or two fans for Danfoss condensing units

*OPTION
OVERLOAD PROTECTOR IF AVAILABLE

50 Hz			
COMPRESSOR MODEL	DISPLACEMENT cm³	A	B
		µF/450VAC	µF/450VAC
NTZ048	048	30	100
NTZ068	068	30	100
MT-MTZ18	030	30	100
MT-MTZ22	038	30	100
MT-MTZ28	048	30	100
MT-MTZ32	054	35	135
MT-MTZ36	061	35	135
60 Hz			
NTZ048	048	25	100
NTZ068	068	50	135
MT-MTZ18	030	25	100
MT-MTZ22	038	45	100
MT-MTZ28	048	50	135
MT-MTZ32	054	45	100
MT-MTZ36	061	45	100

FAN DIAMETER	C (Capacitor Fan) ebmpapst µF/450VAC	
	50 Hz	60 Hz
350	2	2
	C1/C2 (Capacitor Fan)	
450	3	3
500	5	5
560	10	10

LEGEND	
A	RUN CAPACITOR COMPRESSOR
B	START CAPACITOR COMPRESSOR
CS	CONTROL SWITCH ON/OFF
C/C1/C2	CAPACITOR FAN
F1	FUSE CONTROL CIRCUIT
FAN 1-2	CONDENSER FANS
HP/LP	DUAL PRESSURE SWITCH
KM1	COMPRESSOR CONTACTOR
KM2	FAN CONTACTOR
KM3	FAN CONTACTOR
Q1	MAIN SWITCH + CIRCUIT BREAKER
R1	CRANKCASE HEATER
RA	BLEEDER RESISTOR
RB	BLEEDER RESISTOR
TH	THERMOSTAT

Three Phase models

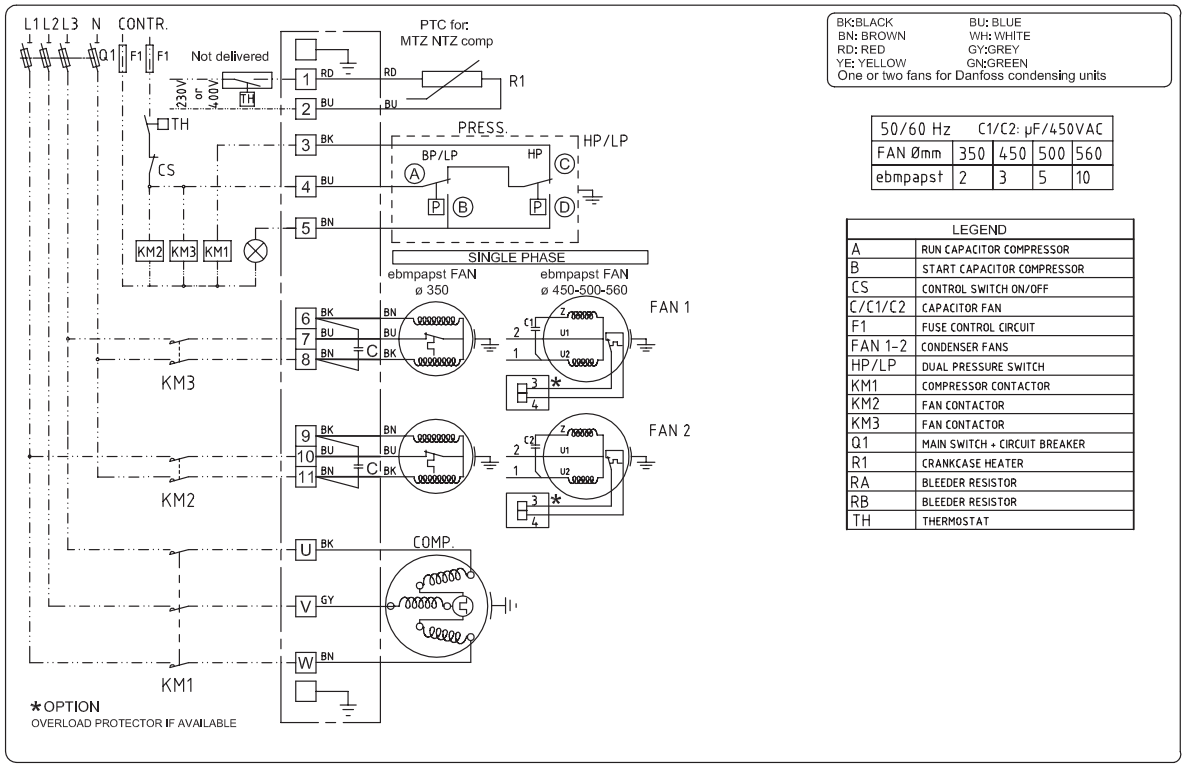

BK:BLACK BU: BLUE
BN: BROWN WH: WHITE
RD: RED GY:GREY
YE: YELLOW GN:GREEN
One or two fans for Danfoss condensing units

50/60 Hz	C1/C2: µF/450VAC			
FAN Ømm	350	450	500	560
ebmpapst	2	3	5	10

LEGEND	
A	RUN CAPACITOR COMPRESSOR
B	START CAPACITOR COMPRESSOR
CS	CONTROL SWITCH ON/OFF
C/C1/C2	CAPACITOR FAN
F1	FUSE CONTROL CIRCUIT
FAN 1-2	CONDENSER FANS
HP/LP	DUAL PRESSURE SWITCH
KM1	COMPRESSOR CONTACTOR
KM2	FAN CONTACTOR
KM3	FAN CONTACTOR
Q1	MAIN SWITCH + CIRCUIT BREAKER
R1	CRANKCASE HEATER
RA	BLEEDER RESISTOR
RB	BLEEDER RESISTOR
TH	THERMOSTAT

ENGINEERING
TOMORROW

Danfoss Cooling

is a worldwide manufacturer of compressors and condensing units for refrigeration and HVAC applications. With a wide range of high quality and innovative products we help your company to find the best possible energy efficient solution that respects the environment and reduces total life cycle costs.

We have 40 years of experience within the development of hermetic compressors which has brought us amongst the global leaders in our business, and positioned us as distinct variable speed technology specialists. Today we operate from engineering and manufacturing facilities spanning across three continents.

Danfoss Turbocor Compressors

Danfoss Inverter Scrolls

Danfoss Scrolls

Danfoss Maneurop Reciprocating Compressors

Danfoss Optyma™ Condensing Units

Danfoss Light Commercial Refrigeration Compressors

Our products can be found in a variety of applications such as rooftops, chillers, residential air conditioners, heatpumps, coldrooms, supermarkets, milk tank cooling and industrial cooling processes.

www.danfoss.com

Danfoss, BP 331, 01603 Trévoux Cedex, France | +334 74 00 28 29

member of:
ASERCOM
www.asercom.org

Danfoss can accept no responsibility for possible errors in catalogues, brochures and other printed material. Danfoss reserves the right to alter its products without notice. This also applies to products already on order provided that such alterations can be made without subsequential changes being necessary in specifications already agreed.
All trademarks in this material are property of the respective companies. Danfoss and the Danfoss logotype are trademarks of Danfoss A/S. All rights reserved.