Quick Guide

Danfoss *Icon*™
Master Controller 24 V

Wired System

A.

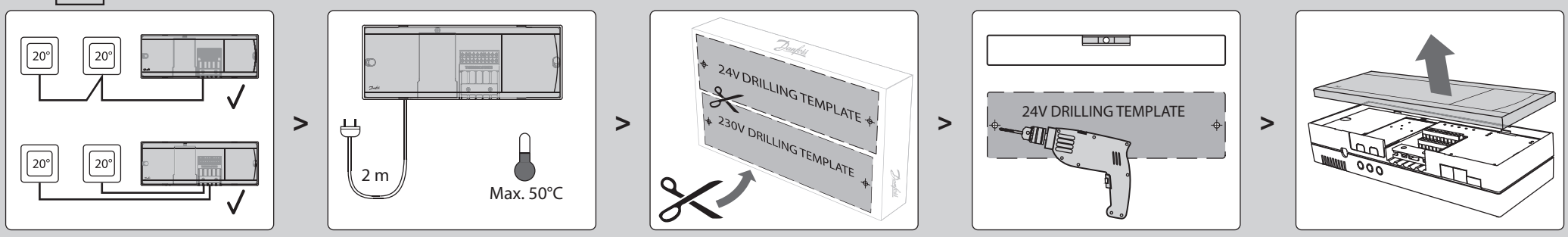

B.

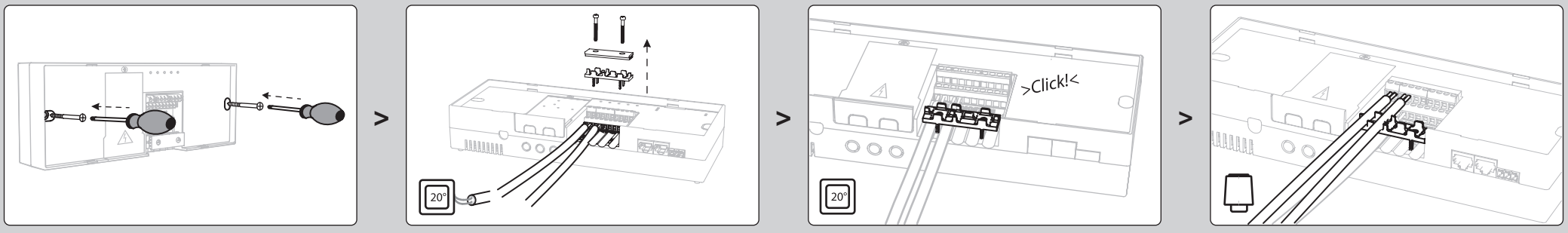

C.

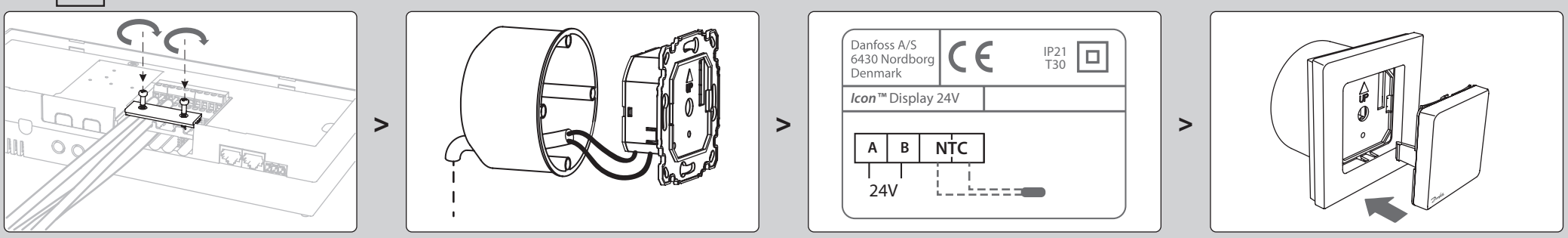

D.

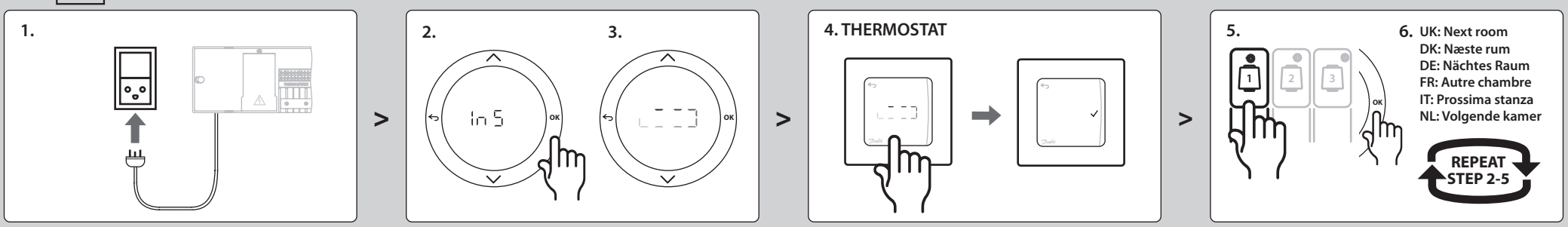

E.

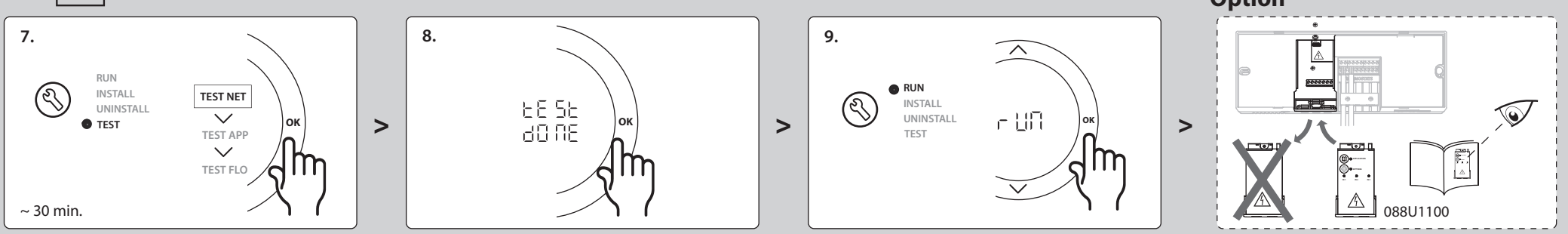

Cable/wiring

24V

2 x 2 x Ø 0,6 PDS cable (UTP or STP)	☺
H03VV-F 0,50 mm², flexible H03VV-F 0,75 mm², flexible 3 x 1,0 mm², solid core 3 x 1,5 mm², solid core	☺
5 x 1,5 mm² > 1,5 mm² < 24 AWG	☹

230V (3A fuse in Danfoss Icon™ Master, 24 V)

H03VV-F 0,50 mm², flexible H03VV-F 0,75 mm², flexible	☺
3 x 1,0 or 3 x 1,5 mm², solid core	☺
5 x 1,5 mm², solid core > 1,5 mm²	☹

Danfoss *Icon*™ Master Controller 24 V

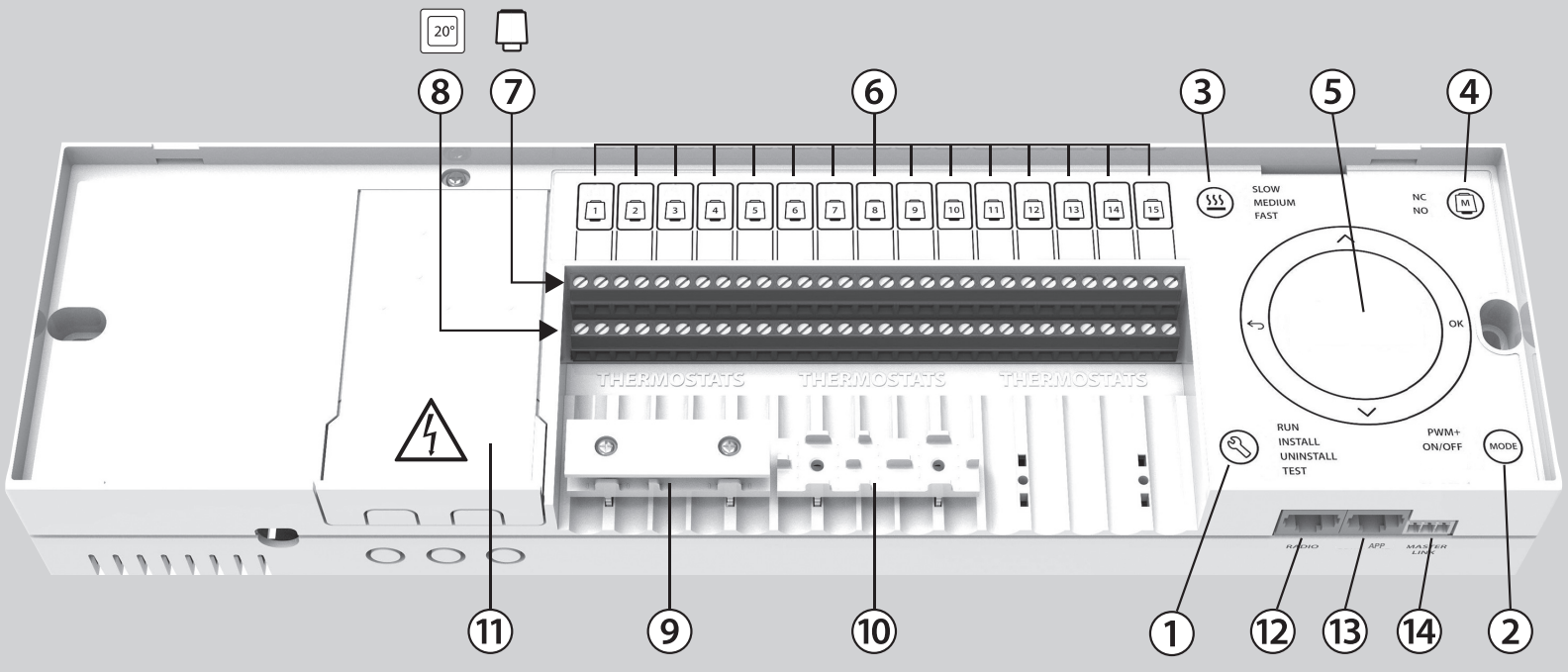

© Danfoss | FEC | 2019.02 | 1

Quick Guide

Danfoss *Icon*™
Master Controller 24 V

Wireless System

A.

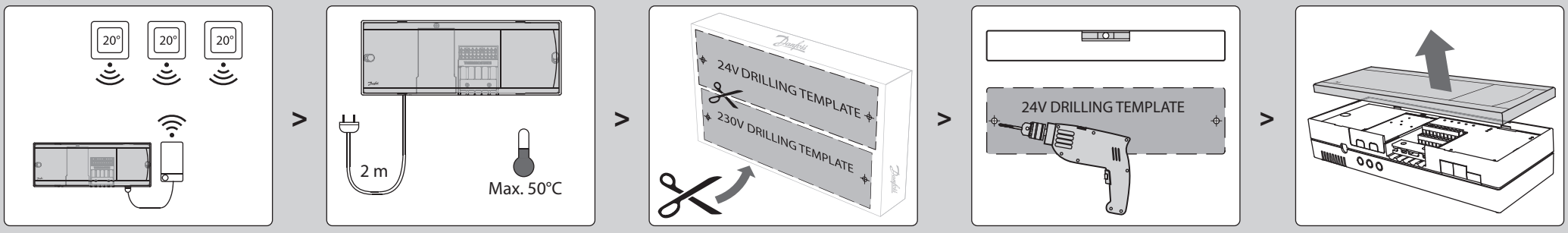

B.

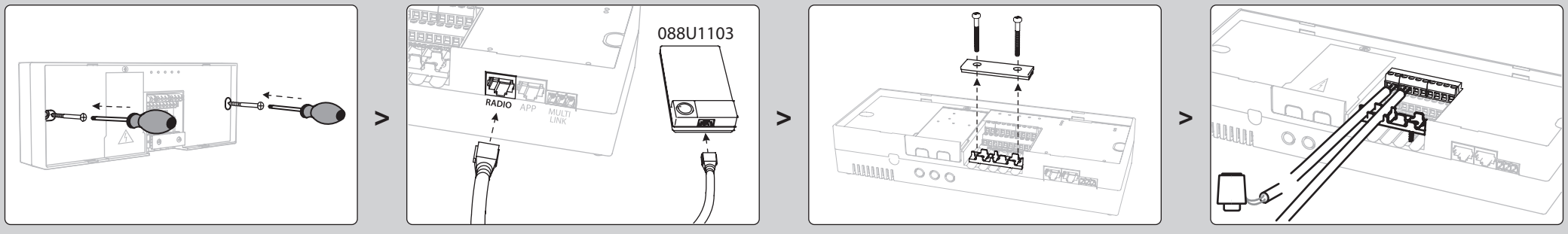

C.

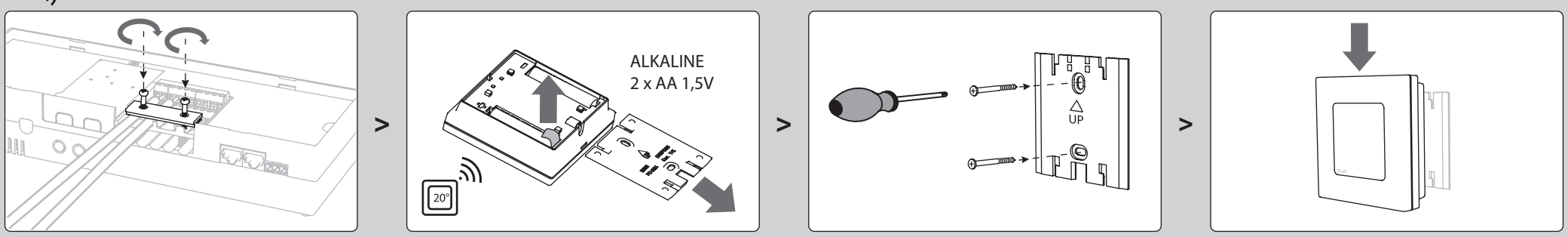

D.

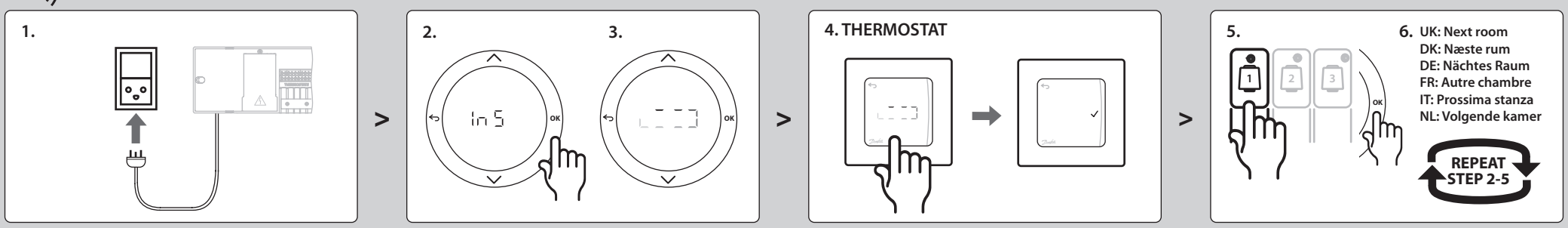

E.

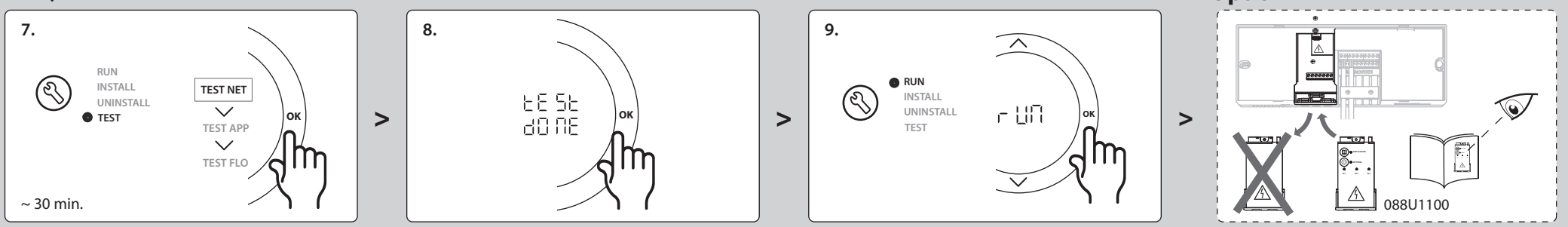

Cable/wiring

230V (3A fuse in Danfoss Icon™ Master, 24 V)

H03VV-F 0,50 mm², flexible **H03VV-F 0,75 mm², flexible**	☺
3 x 1,0 or 3 x 1,5 mm², solid core	☺
5 x 1,5 mm², solid core > 1,5 mm²	☹

Danfoss *Icon*™ Master Controller 24 V

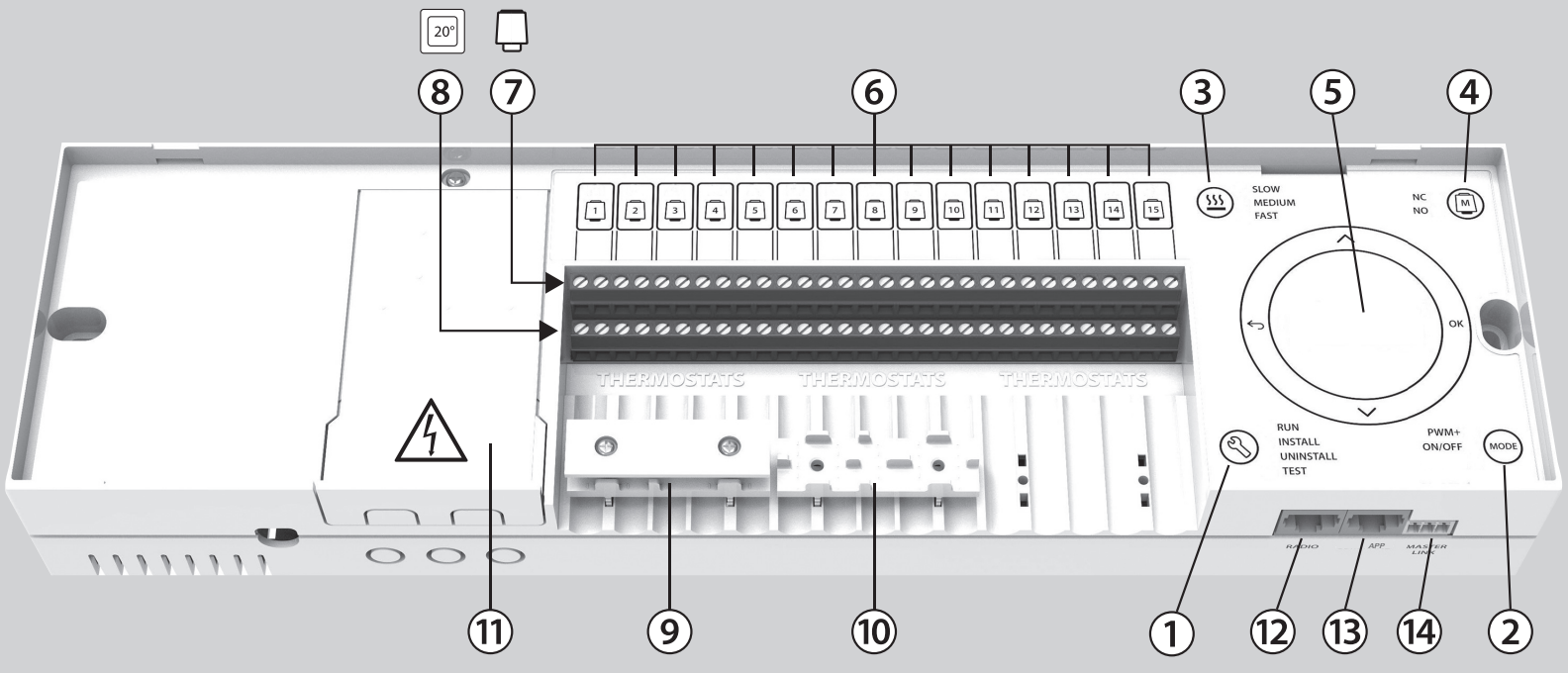

© Danfoss | FEC | 2019.02 | 2