ENGINEERING
TOMORROW

User Manual

Remote Control
R13 F Receiver

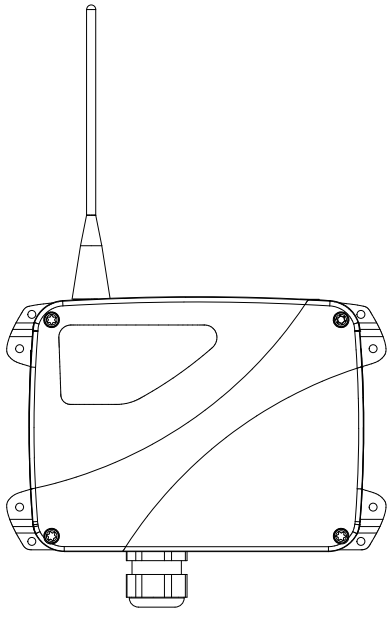

www.danfoss.com

Revision history

Table of revisions

Date	Changed	Rev
January 2019	Rebranded to Danfoss Power Solutions	0101

Contents

Safety instructions

R13 F general safety

The following safety instructions must be read carefully in order to install and use the product properly and to keep it in perfect working condition and to reduce the risk of misuse.

Potential damage to operator and product.
Do not use this product on machines in potentially explosive atmospheres unless the model is ATEX/RATEX certified to do so.

- Strictly adhere to the installation instructions contained in this document.
- Make sure that professional and competent personnel carry out the installation.
- Ensure that all site and prevailing safety regulations are fully respected.
- Make sure that this document is permanently available to the operator and maintenance personnel.
- Keep the transmission key when the set is not in use.
- On starting each working day, check to make sure that the STOP button and other safety measures are working.
- When in doubt, press the STOP button.
- Whenever several sets have been installed, make sure the transmitter is the right one. Identify the machine controlled on the label for this purpose on the transmitter or by using the display (in case it has one).
- Service the equipment periodically.
- When carrying out repairs, only use spare parts from Danfoss.

R13 F safety warnings

Potential damage to operator and product.
Follow the guidelines below to reduce risk of injury to the operator and the product.

- Use the device with the manufacturer's battery and battery charger (if applicable).
- Only allow qualified personnel to operate the equipment.
- Always set the STOP button in the off position when not in use.
- Always press STOP before plugging in tether cable (if applicable).
- Do not operate product when visibility is limited.
- Make sure product is compatible with the machine.
- Avoid knocking or dropping the product.
- Do not use the product if a failure is detected.

Changes or modifications not approved by Danfoss can void the user's authority to operate this product.

Safety instructions

Quick reference precautions

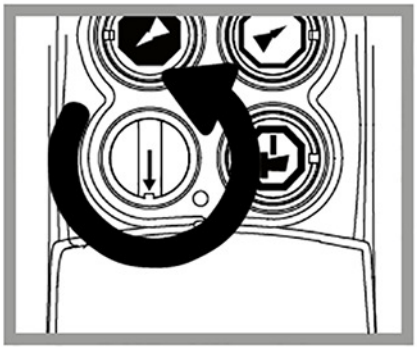

Remove the transmission key only when the set is not in use or to deny the access

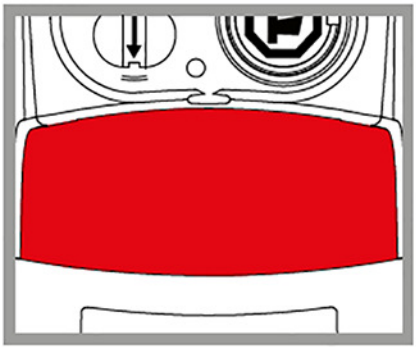

When in doubt, press the STOP button

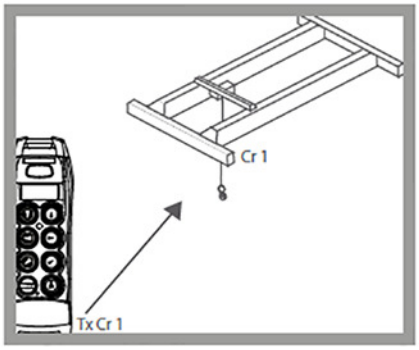

Make sure the transmitter works with the machine to be handled

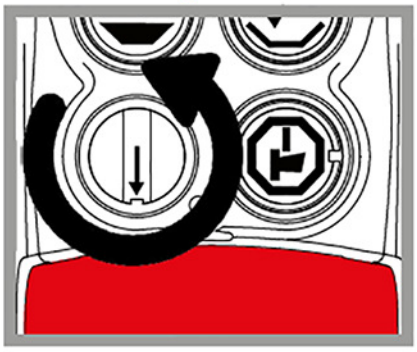

After use set the contact key and the STOP button

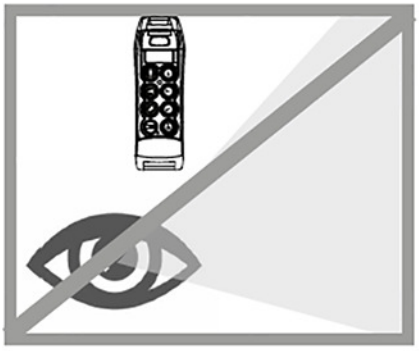

Do not use the set when visibility is limited

Avoid knocking or dropping the set

Technical description

R13 F dimensions

Dimensions in mm

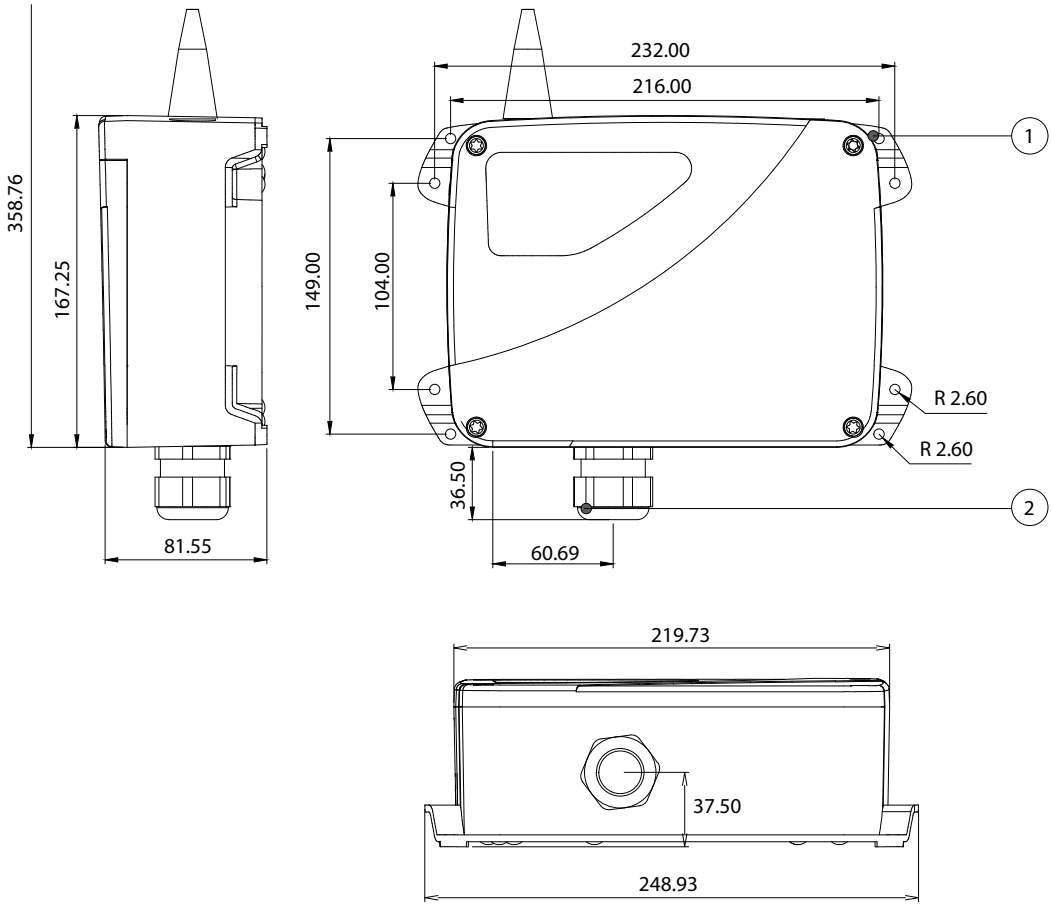

1. Fixing slots (fixed assembly or anti-vibration)
2. M32 cable gland

Technical description

R13 F hardware description

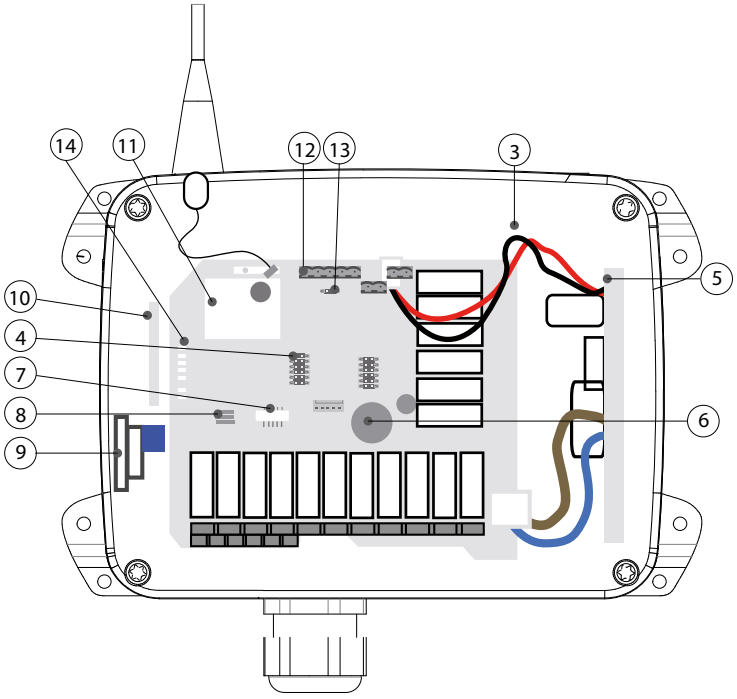

3.	External antenna A60 (433) or A70 (870)
4.	RS232 / RS485 socket
5.	Power supply
6.	LR13 logic board
7.	Data logger connection
8.	INXX card socket
9.	External EEPROM
10.	LCD connection
11.	TR800-CE MCX radio
12.	CAN connection
13.	BUS termination CAN
14.	Signaling intern LEDs
15.	Wiring connection

Installation

R13 F receiver installation

The below information describes hazards to be aware of during installation and steps to locate the receiver.

Risk of shock
Completely shut down the machine when installing the receiver.
Check the power supply and shut off the main switch to disconnect the interface cable between the receiver and the machine's electrical box.

1. Find an easily accessible and clear location with a direct vision between the receiver's antenna and the transmitter's working area.

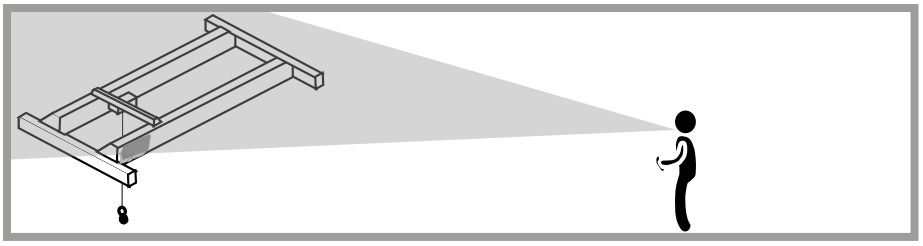

2. Optional: If it is difficult to achieve direct vision between the receiver's antenna and the transmitter's working area, it is recommended to use an extended antenna in a clear location (only for models that allow an antenna).

   In areas of high vibration, the use of dampers is advised.

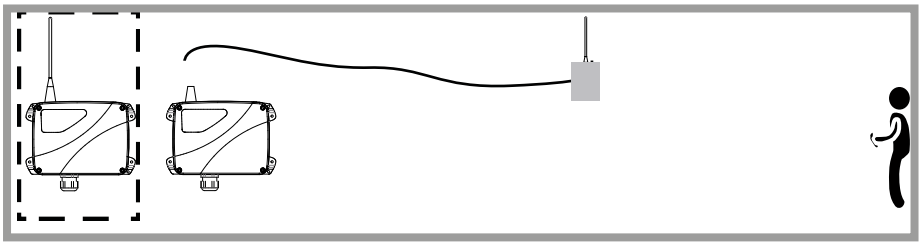

3. Proceed to connect the power supply. Use the connection block diagram provided with the system, where the correspondence between the transmitter maneuvers and the receiver's outputs are detailed.

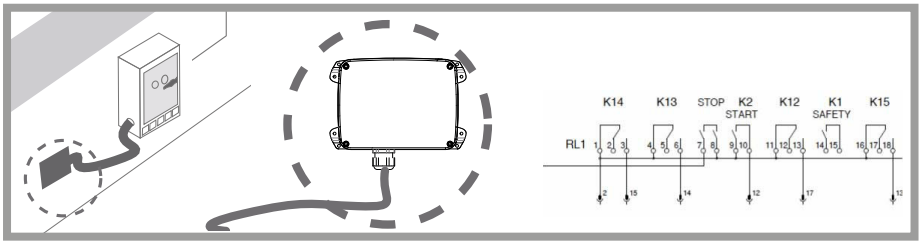

4. Check if the electrical installation and verify if there's an option to connect the neutral or the ground cable. In that case, don't forget to connect the ground cable.

   The use of fireproof or flame retardant cables are recommended for the connection.

Troubleshooting

Receiver icon troubleshooting

Icon	Description	Action
	Power failure	Check the receiver power supply
	Hardware error	Contact distributor; replace receiver
	CAN error	Contact your distributor
	Repose state due to active stop	Release stop button and turn transmitter on
	Repose state due to passive stop	Reestablish link to activate the transmitter
	Linked state	Correct link
	Correct ID (link quality as indicated by the bar)	In case of no signal, check if the transmitter is turned on
	Incorrect ID	In case of interference, change frequency channel
	RF signal detected	In case of interference, change frequency channel
	Mask error	Contact your distributor

ENGINEERING
TOMORROW

Products we offer:

- DCV directional control valves
- Electric converters
- Electric machines
- Electric motors
- Hydrostatic motors
- Hydrostatic pumps
- Orbital motors
- PLUS+1® controllers
- PLUS+1® displays
- PLUS+1® joysticks and pedals
- PLUS+1® operator interfaces
- PLUS+1® sensors
- PLUS+1® software
- PLUS+1® software services, support and training
- Position controls and sensors
- PVG proportional valves
- Steering components and systems
- Telematics

Danfoss Power Solutions is a global manufacturer and supplier of high-quality hydraulic and electric components. We specialize in providing state-of-the-art technology and solutions that excel in the harsh operating conditions of the mobile off-highway market as well as the marine sector. Building on our extensive applications expertise, we work closely with you to ensure exceptional performance for a broad range of applications. We help you and other customers around the world speed up system development, reduce costs and bring vehicles and vessels to market faster.

Danfoss Power Solutions – your strongest partner in mobile hydraulics and mobile electrification.

Go to www.danfoss.com for further product information.

We offer you expert worldwide support for ensuring the best possible solutions for outstanding performance. And with an extensive network of Global Service Partners, we also provide you with comprehensive global service for all of our components.

Comatrol
www.comatrol.com

Turolla
www.turollaocg.com

Hydro-Gear
www.hydro-gear.com

Daikin-Sauer-Danfoss
www.daikin-sauer-danfoss.com

Local address:

Danfoss
Power Solutions (US) Company
2800 East 13th Street
Ames, IA 50010, USA
Phone: +1 515 239 6000

Danfoss
Power Solutions GmbH & Co. OHG
Krokamp 35
D-24539 Neumünster, Germany
Phone: +49 4321 871 0

Danfoss
Power Solutions ApS
Nordborgvej 81
DK-6430 Nordborg, Denmark
Phone: +45 7488 2222

Danfoss
Power Solutions Trading (Shanghai) Co., Ltd.
Building #22, No. 1000 Jin Hai Rd
Jin Qiao, Pudong New District
Shanghai, China 201206
Phone: +86 21 3418 5200