ENGINEERING
TOMORROW

Data sheet

Solenoid coils for electric expansion and solenoid valves with UL approval

Type BJ, BX, BT and BU

BJ and BX are a series of coils with UL approval. The coils are designed to be used with Danfoss electric expansion and solenoid valves.

BT and BU are dual-voltage versions with UL approval, designed to be used with Danfoss solenoid valves.

Features

- High reliability and long lifetime
- Easy mounting and dismounting
- UL approved coil range
- Covering standard voltage and frequency
- Two electrical connection versions

Approval

c UL us Listed

Technical data

Design
In accordance with UL 429

Power supply
Alternating current (AC)

Permissible voltage variation
Alternating current (AC):
50 Hz and 60 Hz: -15% to +10%
50/60 Hz: ± 10%

Insulation of coil wire
Class H according to IEC 85

Connection
Junction box or Conduit boss

Enclosure, IEC 60529
Junction box NEMA 2 ~ IP 12–32
Conduit boss NEMA 4 ~ IP 54

Ambient temperature
-40 – 122 °F (-40 – 50 °C)

Humidity
0 – 97% non-condensation condition

Ordering
BJ and BX Coils

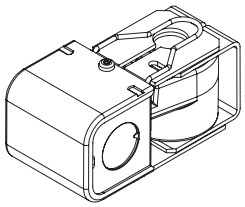

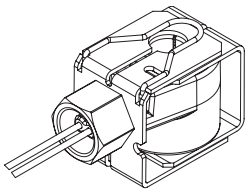

Valve type	Coil type	Wire length [in.]	Wire length [cm]	Voltage [V AC]	Frequency [Hz]	Power consumption [W]	Code no.
Junction box NEMA 2							
AKV / EVR EVRH / EVRA EVRAT / EVRS EVRST / EVM EV220B 6-50 EV210B EV215B EV225B EV250B	BJ024CS	7	18	24	50 / 60	14	**018F4100**
	BJ120CS	7	18	110 120	50 / 60 60	16 15	**018F4110**
	BJ240CS	7	18	208 – 240 230	60 50	14 17	**018F4120**
AKVH / EVRH	BJ120BS	7	18	120	60	16	**018F4130**
	BJ208BS	7	18	208	60	16	**018F4132**
	BJ240BS	7	18	240	60	16	**018F4134**
Conduit boss NEMA 4							
AKV / EVR EVRH / EVRA EVRAT / EVRS EVRST / EVM EV220B 6-50 EV210B EV215B EV225B EV250B	BX024CS	18	46	24	50 / 60	14	**018F4102**
	BX024CS	71	180	24	50 / 60	14	**018F4103**
	BX024CS	98	250	24	50 / 60	14	**018F4104**
	BX120CS	18	46	110 120	50 / 60 60	16 15	**018F4112**
	BX120CS	36	91				**018F4113**
	BX120CS	71	180				**018F4114**
	BX120CS	98	250				**018F4115**
	BX240CS	18	46	208 – 240 230	60 50	14 17	**018F4122**
	BX240CS	98	250				**018F4123**
AKVH / EVRH	BX120BS	98	250	120	60	16	**018F4131**
	BX208BS	98	250	208	60	16	**018F4133**
	BX240BS	98	250	240	60	16	**018F4135**

Ordering
BT and BU Coils

Valve type	Coil type	Wire length [in.]	Wire length [mm]	Voltage [V AC]	Frequency [Hz]	Power consumption [W]	Code no.
Junction box NEMA 2							
EVR	BT240C	7	18	110	50	12	**018F4180**
	BT240C	7	18	110 – 120	60	12	
	BT240C	7	18	230	50	12	
	BT240C	7	18	208 – 240	60	12	
Conduit boss NEMA 4							
EVR	BU240C	7	18	110	50	12	**018F4181**
	BU240C	7	18	110 – 120	60	12	
	BU240C	7	18	230	50	12	
	BU240C	7	18	208 – 240	60	12	

Dimensions and weight

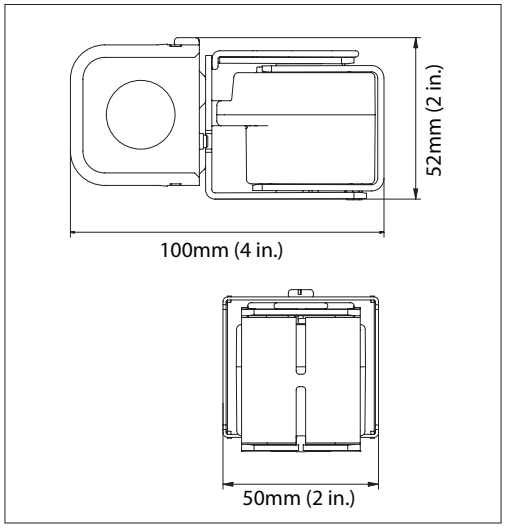

Junction box
Weight 0.860 lbs / 0.39 kg

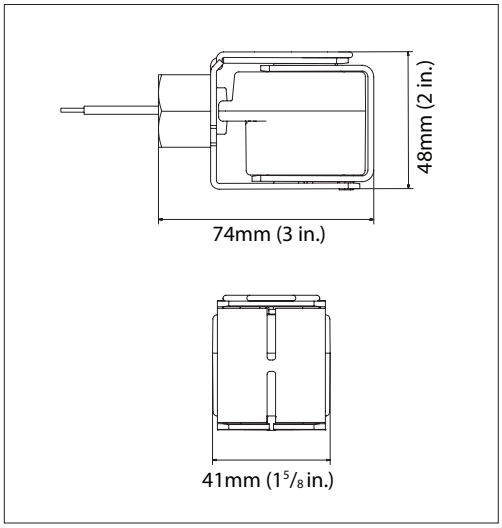

Conduit boss
Weight 0.717 lbs / 0.33 kg

Danfoss can accept no responsibility for possible errors in catalogues, brochures and other printed material. Danfoss reserves the right to alter its products without notice. This also applies to products already on order provided that such alterations can be made without subsequential changes being necessary in specifications already agreed.
All trademarks in this material are property of the respective companies. Danfoss and the Danfoss logotype are trademarks of Danfoss A/S. All rights reserved.