ENGINEERING
TOMORROW

Application guidelines

Inverter scroll compressors
VZH028-035-044
single

R410A

http://cc.danfoss.com

VZH scroll specificities 5

Inverter compressors 6
Compressor size 6
Frequency converter variants 6
Compressor and frequency converter combinations 6
VLT Compressor Drives literatures 6

Nomenclature and specifications 7
Compressor nomenclature 7
Frequency converter nomenclature 8
Label 8
Serial number 8

Technical specifications 9
Compressor specifications 9
Frequency converter specifications 9
Oil return management 9
Bearings lubrication 9
Capacity tables 10

Dimensions 16
VZH028-035-044G/J/H OSG version 16
VZH028-035-044G/J 16
OLS version 16
Sight glass / Oil level sensor 17
Schrader 17
Suction & discharge connections 17
Frequency converter dimensions 17
CDS803 frequency converter 18
CDS303 frequency converter 18

Electrical data, connections and wiring 19
Supply voltage 19
Compressor electrical specifications 19
Terminal cover mounting 19
Terminal cover removal 19
Fuses 20
Wire sizes 21
Wiring & EMC protection 21
EMC correct installation of an IP20 frequency drive CDS803 22
Wiring diagram of CDS803 22
Wiring connections of CDS803 23
EMC correct installation of an IP20 frequency drive CDS303 24
Wiring diagram of CDS303 24
Wiring connections of CDS303 25
Electrical connections 25
Soft-start control 26
Phase sequency and reverse rotation protection 26
IP rating 26
Motor protection 26
Anti-reverse protection 26
Temperature protection 27
Voltage imbalance 27

Approvals and certificates 28
Low voltage directive 2014/35/EU 28
Internal free volume 28
Approvals and certificates 28

Operating conditions 29
Application envelopes 29
Short cycle timer function 30
Discharge gas thermostat 31
Oil return management function (single compressor) 32
High and low pressure protection 32
Essential piping design considerations 34

System design recommendations 34
Oil management 35
Heat exchangers 36
Refrigerant charge limits 36
Off-cycle migration 36
Liquid floodback during operation 37
Manage superheat 38

Specific application recommendations 40
Low ambient compressor operations 40
Brazed plate heat exchangers 41
Reversible heat pump systems 41

Sound generation in a refrigeration or air conditioning system 43
Running sound level 43
Sound and vibration management 43
Compressor sound radiation 43
Mechanical vibrations 43
Speed by-pass 43
Gas pulsation 43

Installation 44
Compressor handling 44
Mounting 44
Removing connections shipping plugs 44
System cleanliness 45
Tubing 45
Filter driers 45
Brazing and soldering 45
Compressor connection 45
High voltage test 46
System pressure test 46
Leak detection 47
Vacuum pump down and moisture removal 47
Refrigerant charging 47
Commissioning 47
Oil level checking and top-up 48

Trouble shooting 49

Ordering information 52
Kit ordering and shipping 52
Packaging 52
Ordering information and packaging 52
VZH converter order information 53

Accessories 54
Valves, adapters, connectors & gaskets for use on suction and discharge connections 54
Crankcase heaters & thermostats 54
Lubricant, acoustic hoods and spare parts 54
Spare parts frequency converter 55

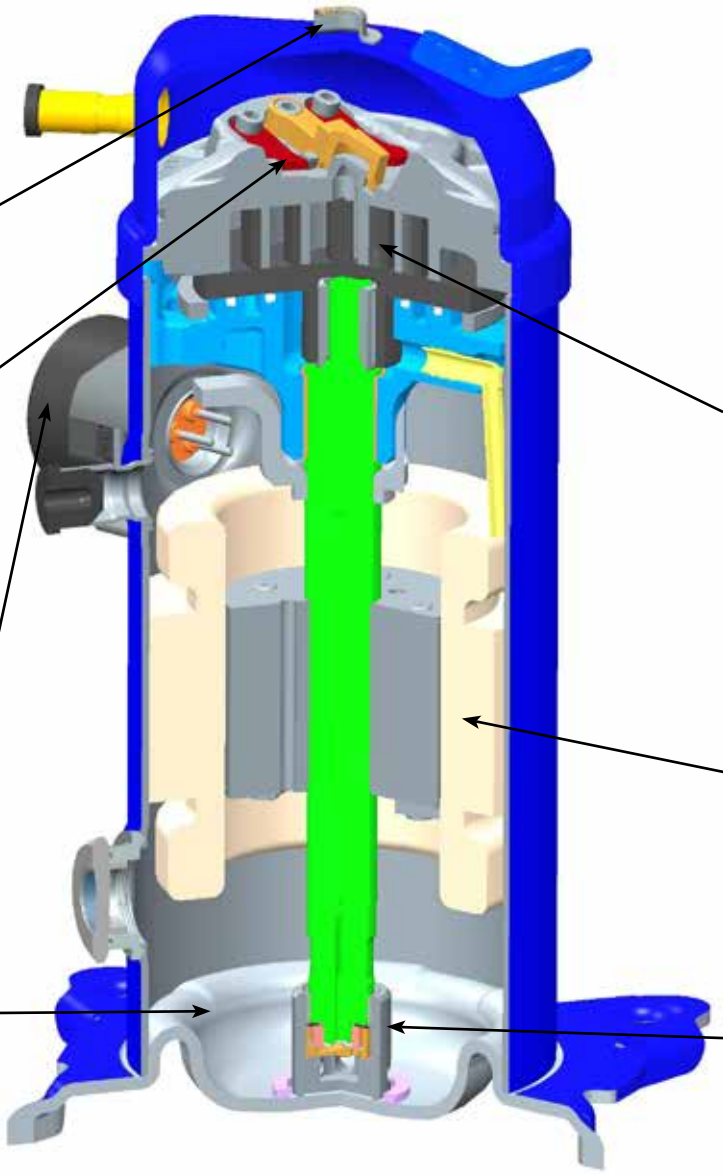
Discharge sensor (dome sensor) for high discharge temperature monitoring, sensor is fitted into top bracket. Discharge sensor is optional.
Intermediate discharge valves for better efficiency at low pressure-ratio
EMC (Electro-Magnetic Compatibility) bracket provided allows for grounding termination of shielded wire-harness, which reduces EMC emissions between drive and compressor
PVE 32 lubricant
Scrolls with optimized volume ratio lead to better heat pump application
New distributed IPM motor lead to higher power factor
Linear control oil pump

Application Guidelines	Inverter compressors	Single compressors
Compressor size	Inverter technology offers more flexibility in compressor selection than fixed-speed compressors. Selection of the right inverter compressor size can be made by different methods: 1. Maximum cooling capacity: Select a compressor size which achieves the peak load system cooling capacity demand at its maximum speed. 2. Nominal cooling capacity: Select a compressor size which achieves the nominal system cooling capacity at a rotational speed of 3600 - 4500 rpm (60-75 rps).	3. Best Seasonal Efficiency Ratio: Select a compressor size which achieves the minimum system cooling demand at its minimum speed. Ensure that the compressor is able to cover the peak load system cooling capacity. This selection makes the compressor run for a maximum time at part load where the system efficiency is highest. Performance tables at three speeds can be found in the following pages. Detailed performances can be found in datasheets and in selection programs.
Frequency converter variants	Different frequency converter variants are available according to: Frequency converter for VZH028-035-044 200V&400V: CDS803 1. Mains supply voltage: - 200-240V/3ph/50-60Hz - 380-480V/3ph/50-60Hz 2. IP class (CDS803 drives are available in IP20 or IP21 (requiring additional kit) housings)	3. RFI (Radio Frequency Interference) class H4 4. Printed Circuit Board (PCB) coated Frequency converter for VZH028-035-044 575V: CDS303 1. Mains supply voltage: 525-600V/3ph/50-60Hz 2. IP class: IP20 3. RFI class HX: No filter 4. PCB not coated
Compressor and frequency converter combinations	When the compressor size and mains voltage have been defined in the above selection criteria, the code number tables from the "Ordering information and packaging" section provides the appropriate frequency converter sizes and up to eight corresponding code numbers for each compressor model.	⚠ **Note this compressor is equipped with a four-pole electrical motor so the applied frequency from the inverter will be 30 Hz for 15 rps (900 rpm) up to 200 Hz for 100 rps (6000 rpm).** Please refer to the table below
VLT Compressor Drives literatures	VLT Compressor Drives User's Manual (FRCC.ES.017.A1.02) introduces different VLT	Compressor Drives literatures: Operating instructions, MCT 10 set-up, Modbus RTU instructions, VLT drawings, etc..

		min	max
Compressor speed	rps	15	100
	rpm	900	6000
Drive output frequency	Hz	30	200

Compressor nomenclature

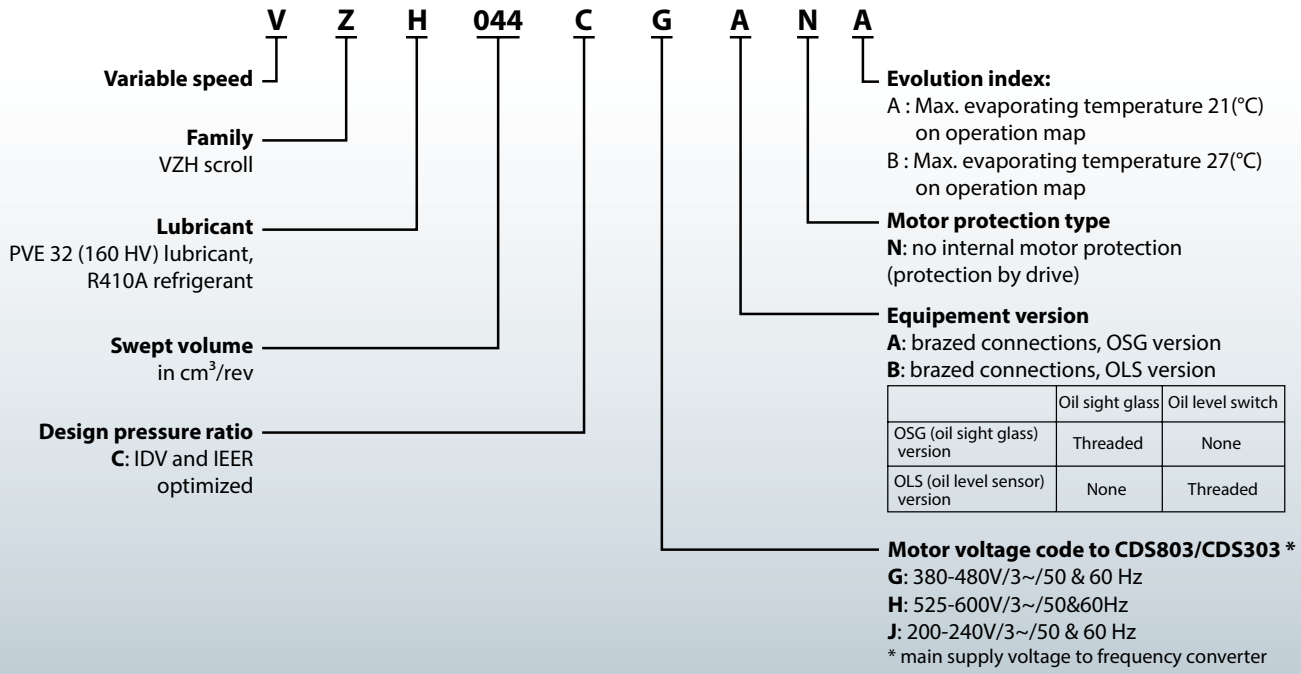

	Oil sight glass	Oil level switch
OSG (oil sight glass) version	Threaded	None
OLS (oil level sensor) version	None	Threaded

Frequency converter nomenclature

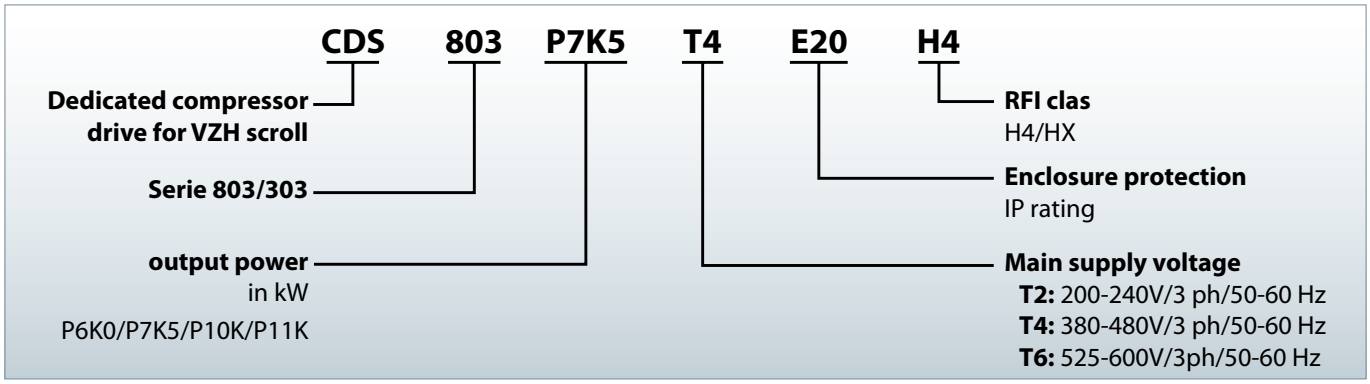

Label

Serial number

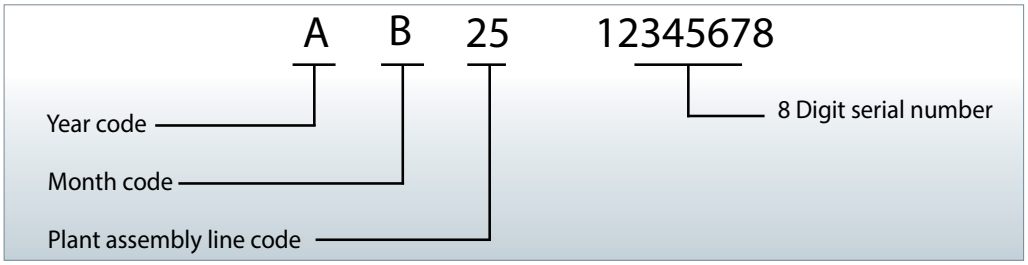

Compressor specifications

Compressor model	Swept volume (cm^3/rev)	Displacement				Oil charge (Liters)	Net weight (kg)
		15 rps (m^3/h)	50 rps (m^3/h)	60 rps (m^3/h)	100 rps (m^3/h)		
VZH028	27.8	1.5	5.0	6.0	10.0	1.1	26
VZH035	34.9	1.9	6.3	7.5	12.6	1.3	27
VZH044	44.5	2.4	8.0	9.6	16.0	1.3	27

Frequency converter specifications

Mains supply voltage	CDS803-T2: 200 - 240 V +/-10% (3-phase)
	CDS803-T4: 380 - 480 V +/-10% (3-phase)
	CDS303-T6: 525 - 600V +/-10% (3-phase)
Supply frequency	50 / 60 Hz
Output voltage	0 - 100 % of supply voltage
Standby power	T2: P6K0/P7K5: 23.17W P10K: 26.23W T4: P6K0/P7K5: 11.3W P10K: 25.5W T6: P7K5: 17W P11K: 29kW
Inputs	CDS803: 4 digital (0 - 24 V), 2 analog (0 /±10 V or 4 - 20 mA, scalable) CDS303: 6 digital (0-24V), 2 analog (0/+-10V or 4-20mA, scalable)
Programmable outputs	CDS803: 2 digital (0- 24 V), 2 analog (0-24 V), 2 relay CDS303: 2 digital(0-24V), 1 analogue(0-24V), 2 relay
Protection functions	Over-current protection, low / high current handling
Compressor functions	Pressostat / thermostat function (CDS303 only), short cycle protection, oil return management

Oil return management

Oil return management function only works under auto mode: After running at low rpm (less than 40 rps) for 120 minutes, the internal lubrication algorithm in the drive will accelerate the compressor speed to 60 rps or above for 60 seconds to ensure sufficient lubrication of compressor moving parts.

Warning:
This function is enabled by parameter 28-10 as default setting. Please notice when hands on mode is selected, oil return management will not work even if parameter 28-10 (oil return management) is set to on. If compressors run below 40 rps for more than 120 minutes, oil return fault alarm (A208) will report on LCP and stop the compressor. Please select hands on mode carefully and only select hands on mode if the OEM has implemented oil return management in the system controller and qualified oil management. Under such conditions, the compressor could run below 40 rps continually and meanwhile disable drive oil return management 28-10.

Bearings lubrication

A specific oil pump ensures optimal bearing lubrication at all compressor speeds. The specific oil pump provides sufficient bearing lubrication at low speeds as well as to avoid excessive Oil Circulation Ratio (OCR) at high speeds.

Capacity at EN12900 conditions - VZH028CJ-VZH035CJ-VZH044CJ

Models	rpm	rps	Te	-30		-25		-20		-15		-10		-5		0		5		10		15		20		25*	
			Tc	Qo	Pe	Qo	Pe	Qo	Pe	Qo	Pe	Qo	Pe	Qo	Pe	Qo	Pe	Qo	Pe	Qo	Pe	Qo	Pe	Qo	Pe	Qo	Pe
VZH028CJ	1800	30	5	-	-	1850	0.538	2310	0.525	2860	0.491	3500	0.431	4240	0.340	5100	0.213	-	-	-	-	-	-	-	-	-	-
			25	-	-	1460	0.773	1870	0.797	2350	0.812	2910	0.815	3550	0.799	4300	0.760	5140	0.692	6100	0.591	7180	0.452	8400	0.268	-	-
			45	-	-	-	-	-	-	1730	1.189	2180	1.221	2710	1.247	3310	1.262	4000	1.262	4790	1.241	5690	1.194	6700	1.115	-	-
			65	-	-	-	-	-	-	-	-	-	-	-	-	-	-	-	-	-	-	-	-	-	-	-	-
	3600	60	5	3010	1.038	3790	1.053	4730	1.039	5840	0.982	7150	0.867	8680	0.678	10440	0.402	-	-	-	-	-	-	-	-	-	-
			25	2370	1.489	3050	1.524	3860	1.569	4820	1.609	5930	1.630	7230	1.618	8730	1.557	10450	1.433	12400	1.232	14600	0.938	17080	0.537	-	-
			45	-	-	2280	2.290	2940	2.287	3700	2.318	4600	2.369	5640	2.426	6850	2.473	8240	2.496	9830	2.482	11640	2.414	13680	2.278	15980	2.060
			65	-	-	-	-	-	-	-	-	-	-	3760	3.558	4620	3.607	5630	3.671	6790	3.736	8130	3.786	9660	3.809	-	-
	6000	100	5	5030	1.941	6300	1.986	7830	1.976	9650	1.898	11780	1.739	14260	1.484	17120	1.120	-	-	-	-	-	-	-	-	-	-
			25	4000	2.614	5150	2.744	6500	2.858	8080	2.942	9920	2.982	12060	2.964	14520	2.876	17340	2.702	20540	2.431	24150	2.048	28210	1.539	-	-
			45	-	-	3860	3.806	4980	3.929	6280	4.059	7790	4.183	9540	4.288	11560	4.359	13880	4.384	16530	4.349	19530	4.240	22930	4.043	26730	3.746
			65	-	-	-	-	-	-	-	-	-	-	6430	6.008	7910	6.125	9640	6.233	11620	6.319	13890	6.369	16480	6.370	-	-
VZH035CJ	1800	30	5	-	-	2340	0.655	2930	0.638	3620	0.597	4430	0.524	5370	0.414	6460	0.261	-	-	-	-	-	-	-	-	-	-
			25	-	-	1850	0.940	2370	0.969	2970	0.988	3680	0.990	4500	0.971	5440	0.924	6510	0.842	7720	0.719	9090	0.550	10630	0.329	-	-
			45	-	-	-	-	-	-	2190	1.446	2770	1.484	3430	1.516	4190	1.534	5070	1.534	6070	1.508	7200	1.450	8480	1.355		
			65	-	-	-	-	-	-	-	-	-	-	-	-	-	-	-	-	-	-	-	-	-	-	-	-
	3600	60	5	3810	1.238	4790	1.256	5980	1.240	7390	1.172	9050	1.034	10980	0.809	13210	0.480	-	-	-	-	-	-	-	-	-	-
			25	3000	1.776	3870	1.818	4890	1.872	6100	1.920	7510	1.945	9160	1.930	11050	1.858	13220	1.710	15690	1.469	18490	1.119	21620	0.641	-	-
			45	-	-	2890	2.733	3720	2.728	4690	2.766	5820	2.827	7140	2.894	8670	2.951	10430	2.979	12440	2.961	14730	2.880	17320	2.718	20230	2.458
			65	-	-	-	-	-	-	-	-	-	-	4760	4.246	5850	4.304	7120	4.380	8600	4.457	10290	4.518	12230	4.544	-	-
	6000	100	5	6360	2.320	7980	2.374	9920	2.363	12220	2.270	14920	2.079	18060	1.774	21670	1.339	-	-	-	-	-	-	-	-	-	-
			25	5070	3.125	6520	3.281	8220	3.417	10220	3.517	12560	3.565	15260	3.544	18380	3.438	21950	3.231	26000	2.907	30570	2.448	35710	1.840	-	-
			45	-	-	4890	4.551	6300	4.697	7950	4.853	9860	5.001	12080	5.127	14630	5.212	17570	5.242	20920	5.200	24730	5.070	29020	4.835	33840	4.479
			65	-	-	-	-	-	-	-	-	-	-	8140	7.184	10020	7.323	12200	7.453	14710	7.556	17580	7.615	20860	7.616	-	-
VZH044CJ	1800	30	5	-	-	3010	0.822	3760	0.801	4650	0.749	5700	0.658	6910	0.520	8300	0.327	-	-	-	-	-	-	-	-	-	-
			25	-	-	2380	1.180	3040	1.216	3820	1.240	4730	1.243	5780	1.219	6990	1.159	8370	1.057	9930	0.903	11690	0.691	13670	0.412	-	-
			45	-	-	-	-	-	-	2820	1.815	3560	1.863	4410	1.903	5390	1.926	6520	1.925	7810	1.893	9260	1.820	10910	1.701		
			65	-	-	-	-	-	-	-	-	-	-	-	-	-	-	-	-	-	-	-	-	-	-	-	-
	3600	60	5	4900	1.555	6170	1.578	7690	1.558	9510	1.472	11640	1.299	14120	1.016	16990	0.602	-	-	-	-	-	-	-	-	-	-
			25	3860	2.231	4970	2.283	6290	2.351	7840	2.411	9660	2.443	11770	2.424	14210	2.333	17000	2.147	20180	1.845	23770	1.405	27810	0.805	-	-
			45	-	-	3720	3.432	4780	3.427	6030	3.473	7480	3.550	9180	3.635	11140	3.706	13410	3.741	16000	3.719	18940	3.617	22270	3.414	26020	3.087
			65	-	-	-	-	-	-	-	-	-	-	6120	5.332	7530	5.405	9160	5.501	11050	5.598	13240	5.674	15730	5.707	-	-
	6000	100	5	8180	2.903	10260	2.970	12750	2.956	15710	2.839	19180	2.601	23220	2.219	27870	1.675	-	-	-	-	-	-	-	-	-	-
			25	6520	3.910	8380	4.105	10570	4.275	13150	4.400	16150	4.460	19630	4.434	23640	4.301	28220	4.042	33430	3.636	39320	3.063	45920	2.302	-	-
			45	-	-	6280	5.693	8100	5.876	10220	6.071	12680	6.257	15530	6.413	18820	6.520	22600	6.558	26910	6.505	31800	6.342	37320	6.048	43520	5.603
			65	-	-	-	-	-	-	-	-	-	-	10460	8.987	12880	9.162	15680	9.323	18910	9.452	22610	9.527	26830	9.527	-	-

To: Evaporating temperature in °C
Tc: Condensing temperature in °C
Qo: Cooling capacity in W
*only for index B

Superheat = 10 K
Subcooling = 0 K
Pe: Power input in kW (with drive loss)

Note: All performance test data after run-in 72hr

Capacity at ARI conditions - VZH028CJ-VZH035CJ-VZH044CJ

Models	rpm	rps	Te	-30		-25		-20		-15		-10		-5		0		5		10		15		20		25*	
			Tc	Qo	Pe	Qo	Pe	Qo	Pe	Qo	Pe	Qo	Pe	Qo	Pe	Qo	Pe	Qo	Pe	Qo	Pe	Qo	Pe	Qo	Pe	Qo	Pe
VZH028CJ	1800	30	5	-	-	1960	0.538	2440	0.525	3020	0.491	3690	0.431	4480	0.340	5380	0.213	-	-	-	-	-	-	-	-	-	-
			25	-	-	1570	0.773	2010	0.797	2520	0.812	3110	0.815	3800	0.799	4590	0.760	5490	0.692	6520	0.591	7670	0.452	8950	0.268	-	-
			45	-	-	-	-	-	-	1910	1.189	2410	1.221	2980	1.247	3640	1.262	4390	1.262	5250	1.241	6230	1.194	7330	1.115	-	-
			65	-	-	-	-	-	-	-	-	-	-	-	-	-	-	-	-	-	-	-	-	-	-	-	-
	3600	60	5	3180	1.038	4000	1.053	4990	1.039	6170	0.982	7550	0.867	9150	0.678	11000	0.402	-	-	-	-	-	-	-	-	-	-
			25	2550	1.489	3280	1.524	4150	1.569	5160	1.609	6360	1.630	7740	1.618	9340	1.557	11160	1.433	13240	1.232	15580	0.938	18220	0.537	-	-
			45	-	-	2530	2.290	3240	2.287	4080	2.318	5060	2.369	6200	2.426	7520	2.473	9030	2.496	10770	2.482	12740	2.414	14960	2.278	17460	2.060
			65	-	-	-	-	-	-	-	-	-	-	4510	3.558	5520	3.607	6700	3.671	8070	3.736	9640	3.786	11430	3.809	-	-
	6000	100	5	5320	1.941	6660	1.986	8280	1.976	10190	1.898	12440	1.739	15040	1.484	18040	1.120	-	-	-	-	-	-	-	-	-	-
			25	4300	2.614	5530	2.744	6970	2.858	8660	2.942	10620	2.982	12900	2.964	15530	2.876	18520	2.702	21930	2.431	25770	2.048	30080	1.539	-	-
			45	-	-	4270	3.806	5500	3.929	6920	4.059	8580	4.183	10490	4.288	12700	4.359	15230	4.384	18110	4.349	21380	4.240	25070	4.043	29210	3.746
			65	-	-	-	-	-	-	-	-	-	-	7700	6.008	9450	6.125	11470	6.233	13800	6.319	16470	6.369	19500	6.370	-	-
VZH035CJ	1800	30	5	-	-	2480	0.655	3090	0.638	3820	0.597	4680	0.524	5670	0.414	6800	0.261	-	-	-	-	-	-	-	-	-	-
			25	-	-	1990	0.940	2540	0.969	3190	0.988	3940	0.990	4810	0.971	5810	0.924	6950	0.842	8250	0.719	9700	0.550	11330	0.329	-	-
			45	-	-	-	-	-	-	2420	1.446	3040	1.484	3770	1.516	4600	1.534	5560	1.534	6650	1.508	7880	1.450	9270	1.355		
			65	-	-	-	-	-	-	-	-	-	-	-	-	-	-	-	-	-	-	-	-	-	-	-	-
	3600	60	5	4030	1.238	5070	1.256	6320	1.240	7810	1.172	9550	1.034	11580	0.809	13920	0.480	-	-	-	-	-	-	-	-	-	-
			25	3230	1.776	4150	1.818	5250	1.872	6540	1.920	8050	1.945	9800	1.930	11820	1.858	14130	1.710	16760	1.469	19720	1.119	23060	0.641	-	-
			45	-	-	3200	2.733	4110	2.728	5170	2.766	6410	2.827	7850	2.894	9520	2.951	11440	2.979	13630	2.961	16120	2.880	18940	2.718	22110	2.458
			65	-	-	-	-	-	-	-	-	-	-	5700	4.246	6990	4.304	8480	4.380	10210	4.457	12200	4.518	14470	4.544	-	-
	6000	100	5	6730	2.320	8430	2.374	10480	2.363	12900	2.270	15740	2.079	19040	1.774	22840	1.339	-	-	-	-	-	-	-	-	-	-
			25	5450	3.125	7000	3.281	8820	3.417	10960	3.517	13450	3.565	16330	3.544	19650	3.438	23450	3.231	27760	2.907	32620	2.448	38080	1.840	-	-
			45	-	-	5400	4.551	6960	4.697	8760	4.853	10860	5.001	13280	5.127	16070	5.212	19270	5.242	22930	5.200	27070	5.070	31740	4.835	36980	4.479
			65	-	-	-	-	-	-	-	-	-	-	9740	7.184	11960	7.323	14520	7.453	17470	7.556	20840	7.615	24680	7.616	-	-
VZH044CJ	1800	30	5	-	-	3180	0.822	3980	0.801	4910	0.749	6010	0.658	7290	0.520	8750	0.327	-	-	-	-	-	-	-	-	-	-
			25	-	-	2550	1.180	3270	1.216	4100	1.240	5070	1.243	6190	1.219	7480	1.159	8940	1.057	10610	0.903	12480	0.691	14580	0.412	-	-
			45	-	-	-	-	-	-	3110	1.815	3920	1.863	4850	1.903	5920	1.926	7150	1.925	8550	1.893	10140	1.820	11930	1.701		
			65	-	-	-	-	-	-	-	-	-	-	-	-	-	-	-	-	-	-	-	-	-	-	-	-
	3600	60	5	5180	1.555	6520	1.578	8130	1.558	10040	1.472	12280	1.299	14900	1.016	17900	0.602	-	-	-	-	-	-	-	-	-	-
			25	4150	2.231	5340	2.283	6750	2.351	8410	2.411	10350	2.443	12600	2.424	15200	2.333	18170	2.147	21550	1.845	25370	1.405	29650	0.805	-	-
			45	-	-	4110	3.432	5280	3.427	6650	3.473	8240	3.550	10090	3.635	12240	3.706	14710	3.741	17530	3.719	20730	3.617	24360	3.414	28430	3.087
			65	-	-	-	-	-	-	-	-	-	-	7330	5.332	8990	5.405	10910	5.501	13130	5.598	15690	5.674	18610	5.707	-	-
	6000	100	5	8650	2.903	10850	2.970	13470	2.956	16590	2.839	20240	2.601	24490	2.219	29370	1.675	-	-	-	-	-	-	-	-	-	-
			25	7010	3.910	9000	4.105	11340	4.275	14090	4.400	17300	4.460	21010	4.434	25280	4.301	30160	4.042	35700	3.636	41950	3.063	48970	2.302	-	-
			45	-	-	6950	5.693	8950	5.876	11270	6.071	13960	6.257	17080	6.413	20670	6.520	24790	6.558	29480	6.505	34810	6.342	40820	6.048	47560	5.603
			65	-	-	-	-	-	-	-	-	-	-	12530	8.987	15380	9.162	18680	9.323	22470	9.452	26800	9.527	31740	9.527	-	-

To: Evaporating temperature in °C
Tc: Condensing temperature in °C
Qo: Cooling capacity in W
Rating point: ARI@60 rps
To/Tc/SH/SC: 7.2°C/54.4°C/11.1K/8.3K@60rps
*only for index B

Superheat = 11.1 K
Subcooling = 8.3 K
Pe: Power input in kW (with drive loss)

Note: All performance test data after run-in 72hr

Capacity at EN12900 conditions - VZH028CH-VZH035CH-VZH044CH

Models	rpm	rps	Te	-30		-25		-20		-15		-10		-5		0		5		10		15		20		25*	
			Tc	Qo	Pe	Qo	Pe	Qo	Pe	Qo	Pe	Qo	Pe	Qo	Pe	Qo	Pe	Qo	Pe	Qo	Pe	Qo	Pe	Qo	Pe	Qo	Pe
VZH028CH	1800	30	5	-	-	1850	0.557	2310	0.543	2860	0.508	3500	0.446	4240	0.353	5100	0.223	-	-	-	-	-	-	-	-	-	-
			25	-	-	1460	0.799	1870	0.823	2350	0.839	2910	0.842	3550	0.825	4300	0.785	5140	0.716	6100	0.612	7180	0.469	8400	0.281	-	-
			45	-	-	-	-	-	-	1730	1.228	2180	1.261	2710	1.288	3310	1.303	4000	1.303	4790	1.280	5690	1.232	6700	1.151	-	-
			65	-	-	-	-	-	-	-	-	-	-	-	-	-	-	-	-	-	-	-	-	-	-	-	-
	3600	60	5	3010	1.037	3790	1.053	4730	1.039	5840	0.982	7150	0.866	8680	0.678	10440	0.402	-	-	-	-	-	-	-	-	-	-
			25	2370	1.488	3050	1.523	3860	1.568	4820	1.608	5930	1.630	7230	1.617	8730	1.556	10450	1.432	12400	1.231	14600	0.938	17080	0.537	-	-
			45	-	-	2280	2.289	2940	2.286	3700	2.317	4600	2.368	5640	2.425	6850	2.472	8240	2.496	9830	2.481	11640	2.413	13680	2.277	15980	2.059
			65	-	-	-	-	-	-	-	-	-	-	3760	3.557	4620	3.606	5630	3.670	6790	3.734	8130	3.785	9660	3.807	-	-
	6000	100	5	5030	1.894	6300	1.938	7830	1.928	9650	1.852	11780	1.697	14260	1.448	17120	1.093	-	-	-	-	-	-	-	-	-	-
			25	4000	2.551	5150	2.678	6500	2.789	8080	2.871	9920	2.910	12060	2.893	14520	2.806	17340	2.637	20540	2.372	24150	1.998	28210	1.502	-	-
			45	-	-	3860	3.714	4980	3.834	6280	3.961	7790	4.082	9540	4.184	11560	4.254	13880	4.279	16530	4.244	19530	4.138	22930	3.946	26730	3.656
			65	-	-	-	-	-	-	-	-	-	-	6430	5.863	7910	5.977	9640	6.083	11620	6.167	13890	6.216	16480	6.216	-	-
VZH035CH	1800	30	5	-	-	2340	0.651	2930	0.634	3620	0.593	4430	0.520	5370	0.411	6460	0.258	-	-	-	-	-	-	-	-	-	-
			25	-	-	1850	0.935	2370	0.963	2970	0.982	3680	0.984	4500	0.965	5440	0.918	6510	0.836	7720	0.714	9090	0.546	10630	0.325	-	-
			45	-	-	-	-	-	-	2190	1.438	2770	1.476	3430	1.507	4190	1.526	5070	1.525	6070	1.499	7200	1.442	8480	1.347		
			65	-	-	-	-	-	-	-	-	-	-	-	-	-	-	-	-	-	-	-	-	-	-	-	-
	3600	60	5	3810	1.242	4790	1.260	5980	1.244	7390	1.175	9050	1.037	10980	0.811	13210	0.481	-	-	-	-	-	-	-	-	-	-
			25	3000	1.781	3870	1.823	4890	1.877	6100	1.925	7510	1.951	9160	1.936	11050	1.863	13220	1.715	15690	1.474	18490	1.122	21620	0.643	-	-
			45	-	-	2890	2.740	3720	2.736	4690	2.773	5820	2.835	7140	2.902	8670	2.959	10430	2.987	12440	2.969	14730	2.888	17320	2.726	20230	2.465
			65	-	-	-	-	-	-	-	-	-	-	4760	4.258	5850	4.316	7120	4.392	8600	4.470	10290	4.531	12230	4.557	-	-
	6000	100	5	6360	2.378	7980	2.433	9920	2.421	12220	2.326	14920	2.130	18060	1.818	21670	1.372	-	-	-	-	-	-	-	-	-	-
			25	5070	3.203	6520	3.363	8220	3.502	10220	3.605	12560	3.653	15260	3.632	18380	3.523	21950	3.311	26000	2.979	30570	2.509	35710	1.886	-	-
			45	-	-	4890	4.664	6300	4.814	7950	4.973	9860	5.125	12080	5.254	14630	5.341	17570	5.372	20920	5.329	24730	5.195	29020	4.954	33840	4.590
			65	-	-	-	-	-	-	-	-	-	-	8140	7.362	10020	7.505	12200	7.638	14710	7.743	17580	7.804	20860	7.805	-	-
VZH044CH	1800	30	5	-	-	3010	0.855	3760	0.833	4650	0.779	5700	0.685	6910	0.542	8300	0.344	-	-	-	-	-	-	-	-	-	-
			25	-	-	2380	1.226	3040	1.264	3820	1.288	4730	1.292	5780	1.266	6990	1.204	8370	1.098	9930	0.939	11690	0.720	13670	0.433	-	-
			45	-	-	-	-	-	-	2820	1.885	3560	1.935	4410	1.976	5390	2.000	6520	1.999	7810	1.964	9260	1.889	10910	1.765		
			65	-	-	-	-	-	-	-	-	-	-	-	-	-	-	-	-	-	-	-	-	-	-	-	-
	3600	60	5	4900	1.573	6170	1.596	7690	1.576	9510	1.489	11640	1.314	14120	1.028	16990	0.609	-	-	-	-	-	-	-	-	-	-
			25	3860	2.257	4970	2.310	6290	2.378	7840	2.439	9660	2.471	11770	2.452	14210	2.360	17000	2.172	20180	1.867	23770	1.422	27810	0.815	-	-
			45	-	-	3720	3.472	4780	3.467	6030	3.514	7480	3.592	9180	3.677	11140	3.749	13410	3.785	16000	3.762	18940	3.659	22270	3.453	26020	3.123
			65	-	-	-	-	-	-	-	-	-	-	6120	5.395	7530	5.468	9160	5.565	11050	5.663	13240	5.740	15730	5.774	-	-
	6000	100	5	8180	2.896	10260	2.963	12750	2.949	15710	2.832	19180	2.594	23220	2.214	27870	1.671	-	-	-	-	-	-	-	-	-	-
			25	6520	3.900	8380	4.095	10570	4.265	13150	4.390	16150	4.449	19630	4.423	23640	4.291	28220	4.032	33430	3.627	39320	3.056	45920	2.297	-	-
			45	-	-	6280	5.679	8100	5.862	10220	6.056	12680	6.241	15530	6.398	18820	6.505	22600	6.542	26910	6.489	31800	6.327	37320	6.033	43520	5.589
			65	-	-	-	-	-	-	-	-	-	-	10460	8.965	12880	9.139	15680	9.301	18910	9.429	22610	9.504	26830	9.504	-	-

To: Evaporating temperature in °C
Tc: Condensing temperature in °C
Qo: Cooling capacity in W

Superheat = 10 K
Subcooling = 0 K
Pe: Power input in kW (with drive loss)

*only for index B

Note: All performance test data after run-in 72hr

Capacity at ARI conditions - VZH028CH-VZH035CH-VZH044CH

Models	rpm	rps	Te	-30		-25		-20		-15		-10		-5		0		5		10		15		20		25*	
			Tc	Qo	Pe	Qo	Pe	Qo	Pe	Qo	Pe	Qo	Pe	Qo	Pe	Qo	Pe	Qo	Pe	Qo	Pe	Qo	Pe	Qo	Pe	Qo	Pe
VZH028CH	1800	30	5	-	-	1960	0.557	2440	0.543	3020	0.508	3690	0.446	4480	0.353	5380	0.223	-	-	-	-	-	-	-	-	-	-
			25	-	-	1570	0.799	2010	0.823	2520	0.839	3110	0.842	3800	0.825	4590	0.785	5490	0.716	6520	0.612	7670	0.469	8950	0.281	-	-
			45	-	-	-	-	-	-	1910	1.228	2410	1.261	2980	1.288	3640	1.303	4390	1.303	5250	1.280	6230	1.232	7330	1.151	-	-
			65	-	-	-	-	-	-	-	-	-	-	-	-	-	-	-	-	-	-	-	-	-	-	-	-
	3600	60	5	3180	1.037	4000	1.053	4990	1.039	6170	0.982	7550	0.866	9150	0.678	11000	0.402	-	-	-	-	-	-	-	-	-	-
			25	2550	1.488	3280	1.523	4150	1.568	5160	1.608	6360	1.630	7740	1.617	9340	1.556	11160	1.432	13240	1.231	15580	0.938	18220	0.537	-	-
			45	-	-	2530	2.289	3240	2.286	4080	2.317	5060	2.368	6200	2.425	7520	2.472	9030	2.496	10770	2.481	12740	2.413	14960	2.277	17460	2.059
			65	-	-	-	-	-	-	-	-	-	-	4510	3.557	5520	3.606	6700	3.670	8070	3.734	9640	3.785	11430	3.807	-	-
	6000	100	5	5320	1.894	6660	1.938	8280	1.928	10190	1.852	12440	1.697	15040	1.448	18040	1.093	-	-	-	-	-	-	-	-	-	-
			25	4300	2.551	5530	2.678	6970	2.789	8660	2.871	10620	2.910	12900	2.893	15530	2.806	18520	2.637	21930	2.372	25770	1.998	30080	1.502	-	-
			45	-	-	4270	3.714	5500	3.834	6920	3.961	8580	4.082	10490	4.184	12700	4.254	15230	4.279	18110	4.244	21380	4.138	25070	3.946	29210	3.656
			65	-	-	-	-	-	-	-	-	-	-	7700	5.863	9450	5.977	11470	6.083	13800	6.167	16470	6.216	19500	6.216	-	-
VZH035CH	1800	30	5	-	-	2480	0.651	3090	0.634	3820	0.593	4680	0.520	5670	0.411	6800	0.258	-	-	-	-	-	-	-	-	-	-
			25	-	-	1990	0.935	2540	0.963	3190	0.982	3940	0.984	4810	0.965	5810	0.918	6950	0.836	8250	0.714	9700	0.546	11330	0.325	-	-
			45	-	-	-	-	-	-	2420	1.438	3040	1.476	3770	1.507	4600	1.526	5560	1.525	6650	1.499	7880	1.442	9270	1.347		
			65	-	-	-	-	-	-	-	-	-	-	-	-	-	-	-	-	-	-	-	-	-	-	-	-
	3600	60	5	4030	1.242	5070	1.260	6320	1.244	7810	1.175	9550	1.037	11580	0.811	13920	0.481	-	-	-	-	-	-	-	-	-	-
			25	3230	1.781	4150	1.823	5250	1.877	6540	1.925	8050	1.951	9800	1.936	11820	1.863	14130	1.715	16760	1.474	19720	1.122	23060	0.643	-	-
			45	-	-	3200	2.740	4110	2.736	5170	2.773	6410	2.835	7850	2.902	9520	2.959	11440	2.987	13630	2.969	16120	2.888	18940	2.726	22110	2.465
			65	-	-	-	-	-	-	-	-	-	-	5700	4.258	6990	4.316	8480	4.392	10210	4.470	12200	4.531	14470	4.557	-	-
	6000	100	5	6730	2.378	8430	2.433	10480	2.421	12900	2.326	15740	2.130	19040	1.818	22840	1.372	-	-	-	-	-	-	-	-	-	-
			25	5450	3.203	7000	3.363	8820	3.502	10960	3.605	13450	3.653	16330	3.632	19650	3.523	23450	3.311	27760	2.979	32620	2.509	38080	1.886	-	-
			45	-	-	5400	4.664	6960	4.814	8760	4.973	10860	5.125	13280	5.254	16070	5.341	19270	5.372	22930	5.329	27070	5.195	31740	4.954	36980	4.590
			65	-	-	-	-	-	-	-	-	-	-	9740	7.362	11960	7.505	14520	7.638	17470	7.743	20840	7.804	24680	7.805	-	-
VZH044CH	1800	30	5	-	-	3180	0.855	3980	0.833	4910	0.779	6010	0.685	7290	0.542	8750	0.344	-	-	-	-	-	-	-	-	-	-
			25	-	-	2550	1.226	3270	1.264	4100	1.288	5070	1.292	6190	1.266	7480	1.204	8940	1.098	10610	0.939	12480	0.720	14580	0.433	-	-
			45	-	-	-	-	-	-	3110	1.885	3920	1.935	4850	1.976	5920	2.000	7150	1.999	8550	1.964	10140	1.889	11930	1.765		
			65	-	-	-	-	-	-	-	-	-	-	-	-	-	-	-	-	-	-	-	-	-	-	-	-
	3600	60	5	5180	1.573	6520	1.596	8130	1.576	10040	1.489	12280	1.314	14900	1.028	17900	0.609									-	-
			25	4150	2.257	5340	2.310	6750	2.378	8410	2.439	10350	2.471	12600	2.452	15200	2.360	18170	2.172	21550	1.867	25370	1.422	29650	0.815	-	-
			45	-	-	4110	3.472	5280	3.467	6650	3.514	8240	3.592	10090	3.677	12240	3.749	14710	3.785	17530	3.762	20730	3.659	24360	3.453	28430	3.123
			65	-	-	-	-	-	-	-	-	-	-	7330	5.395	8990	5.468	10910	5.565	13130	5.663	15690	5.740	18610	5.774	-	-
	6000	100	5	8650	2.896	10850	2.963	13470	2.949	16590	2.832	20240	2.594	24490	2.214	29370	1.671	-	-	-	-	-	-	-	-	-	-
			25	7010	3.900	9000	4.095	11340	4.265	14090	4.390	17300	4.449	21010	4.423	25280	4.291	30160	4.032	35700	3.627	41950	3.056	48970	2.297	-	-
			45	-	-	6950	5.679	8950	5.862	11270	6.056	13960	6.241	17080	6.398	20670	6.505	24790	6.542	29480	6.489	34810	6.327	40820	6.033	47560	5.589
			65	-	-	-	-	-	-	-	-	-	-	12530	8.965	15380	9.139	18680	9.301	22470	9.429	26800	9.504	31740	9.504	-	-

To: Evaporating temperature in °C
Tc: Condensing temperature in °C
Qo: Cooling capacity in W
Rating point: ARI@60 rps
To/Tc/SH/SC: 7.2°C/54.4°C/11.1K/8.3K@60rps

Superheat = 11.1 K
Subcooling = 8.3 K
Pe: Power input in kW (with drive loss)

*only for index B
Note: All performance test data after run-in 72hr

Capacity at EN12900 conditions - VZH028CG-VZH035CG-VZH044CG

Models	rpm	rps	Te	-30		-25		-20		-15		-10		-5		0		5		10		15		20		25*	
			Tc	Qo	Pe	Qo	Pe	Qo	Pe	Qo	Pe	Qo	Pe	Qo	Pe	Qo	Pe	Qo	Pe	Qo	Pe	Qo	Pe	Qo	Pe	Qo	Pe
VZH028CG	1800	30	5	-	-	1850	0.533	2310	0.519	2860	0.486	3500	0.426	4240	0.336	5100	0.211	-	-	-	-	-	-	-	-	-	-
			25	-	-	1460	0.766	1870	0.789	2350	0.804	2910	0.807	3550	0.791	4300	0.752	5140	0.686	6100	0.586	7180	0.447	8400	0.265	-	-
			45	-	-	-	-	-	-	1730	1.177	2180	1.208	2710	1.234	3310	1.249	4000	1.249	4790	1.228	5690	1.182	6700	1.104	-	-
			65	-	-	-	-	-	-	-	-	-	-	-	-	-	-	-	-	-	-	-	-	-	-	-	-
	3600	60	5	3010	1.027	3790	1.043	4730	1.029	5840	0.972	7150	0.858	8680	0.671	10440	0.398	-	-	-	-	-	-	-	-	-	-
			25	2370	1.474	3050	1.509	3860	1.553	4820	1.593	5930	1.614	7230	1.602	8730	1.541	10450	1.419	12400	1.219	14600	0.929	17080	0.532	-	-
			45	-	-	2280	2.268	2940	2.264	3700	2.295	4600	2.346	5640	2.402	6850	2.449	8240	2.472	9830	2.457	11640	2.390	13680	2.255	15980	2.040
			65	-	-	-	-	-	-	-	-	-	-	3760	3.523	4620	3.571	5630	3.635	6790	3.699	8130	3.749	9660	3.771	-	-
	6000	100	5	5030	1.922	6300	1.966	7830	1.956	9650	1.879	11780	1.722	14260	1.469	17120	1.109	-	-	-	-	-	-	-	-	-	-
			25	4000	2.588	5150	2.717	6500	2.830	8080	2.913	9920	2.952	12060	2.935	14520	2.847	17340	2.676	20540	2.407	24150	2.028	28210	1.524	-	-
			45	-	-	3860	3.768	4980	3.890	6280	4.018	7790	4.141	9540	4.245	11560	4.316	13880	4.341	16530	4.306	19530	4.198	22930	4.003	26730	3.709
			65	-	-	-	-	-	-	-	-	-	-	6430	5.949	7910	6.064	9640	6.172	11620	6.257	13890	6.306	16480	6.307	-	-
VZH035CG	1800	30	5	-	-	2340	0.648	2930	0.632	3620	0.591	4430	0.519	5370	0.410	6460	0.258	-	-	-	-	-	-	-	-	-	-
			25	-	-	1850	0.931	2370	0.959	2970	0.978	3680	0.981	4500	0.962	5440	0.914	6510	0.833	7720	0.712	9090	0.545	10630	0.325	-	-
			45	-	-	-	-	-	-	2190	1.432	2770	1.470	3430	1.501	4190	1.519	5070	1.519	6070	1.493	7200	1.436	8480	1.342		
			65	-	-	-	-	-	-	-	-	-	-	-	-	-	-	-	-	-	-	-	-	-	-	-	-
	3600	60	5	3810	1.226	4790	1.244	5980	1.228	7390	1.160	9050	1.024	10980	0.801	13210	0.475	-	-	-	-	-	-	-	-	-	-
			25	3000	1.759	3870	1.800	4890	1.853	6100	1.901	7510	1.926	9160	1.911	11050	1.839	13220	1.693	15690	1.455	18490	1.108	21620	0.635	-	-
			45	-	-	2890	2.706	3720	2.701	4690	2.738	5820	2.799	7140	2.865	8670	2.921	10430	2.949	12440	2.932	14730	2.851	17320	2.691	20230	2.434
			65	-	-	-	-	-	-	-	-	-	-	4760	4.204	5850	4.261	7120	4.337	8600	4.413	10290	4.473	12230	4.499	-	-
	6000	100	5	6360	2.297	7980	2.351	9920	2.339	12220	2.247	14920	2.058	18060	1.757	21670	1.326	-	-	-	-	-	-	-	-	-	-
			25	5070	3.094	6520	3.249	8220	3.384	10220	3.483	12560	3.530	15260	3.509	18380	3.404	21950	3.199	26000	2.878	30570	2.424	35710	1.822	-	-
			45	-	-	4890	4.506	6300	4.651	7950	4.805	9860	4.952	12080	5.076	14630	5.161	17570	5.190	20920	5.148	24730	5.019	29020	4.787	33840	4.434
			65	-	-	-	-	-	-	-	-	-	-	8140	7.112	10020	7.251	12200	7.379	14710	7.481	17580	7.540	20860	7.540	-	-
VZH044CG	1800	30	5	-	-	3010	0.812	3760	0.791	4650	0.740	5700	0.650	6910	0.513	8300	0.323	-	-	-	-	-	-	-	-	-	-
			25	-	-	2380	1.166	3040	1.201	3820	1.224	4730	1.228	5780	1.204	6990	1.145	8370	1.043	9930	0.891	11690	0.682	13670	0.407	-	-
			45	-	-	-	-	-	-	2820	1.792	3560	1.840	4410	1.879	5390	1.902	6520	1.901	7810	1.869	9260	1.798	10910	1.680		
			65	-	-	-	-	-	-	-	-	-	-	-	-	-	-	-	-	-	-	-	-	-	-	-	-
	3600	60	5	4900	1.540	6170	1.562	7690	1.542	9510	1.457	11640	1.286	14120	1.006	16990	0.596	-	-	-	-	-	-	-	-	-	-
			25	3860	2.209	4970	2.261	6290	2.327	7840	2.387	9660	2.419	11770	2.400	14210	2.310	17000	2.126	20180	1.827	23770	1.391	27810	0.797	-	-
			45	-	-	3720	3.398	4780	3.393	6030	3.439	7480	3.515	9180	3.599	11140	3.669	13410	3.704	16000	3.682	18940	3.581	22270	3.380	26020	3.056
			65	-	-	-	-	-	-	-	-	-	-	6120	5.280	7530	5.352	9160	5.447	11050	5.543	13240	5.618	15730	5.651	-	-
	6000	100	5	8180	2.897	10260	2.964	12750	2.950	15710	2.834	19180	2.596	23220	2.215	27870	1.672	-	-	-	-	-	-	-	-	-	-
			25	6520	3.902	8380	4.097	10570	4.267	13150	4.392	16150	4.451	19630	4.425	23640	4.293	28220	4.034	33430	3.629	39320	3.057	45920	2.298	-	-
			45	-	-	6280	5.682	8100	5.865	10220	6.059	12680	6.244	15530	6.401	18820	6.508	22600	6.545	26910	6.492	31800	6.329	37320	6.036	43520	5.592
			65	-	-	-	-	-	-	-	-	-	-	10460	8.969	12880	9.143	15680	9.305	18910	9.433	22610	9.508	26830	9.509	-	-

To: Evaporating temperature in °C
Tc: Condensing temperature in °C
Qo: Cooling capacity in W

Superheat = 10 K
Subcooling = 0 K
Pe: Power input in kW (with drive loss)

*only for index B

Note: All performance test data after run-in 72hr

Capacity at ARI conditions - VZH028CG-VZH035CG-VZH044CG

Models	rpm	rps	Te	-30		-25		-20		-15		-10		-5		0		5		10		15		20		25*	
			Tc	Qo	Pe	Qo	Pe	Qo	Pe	Qo	Pe	Qo	Pe	Qo	Pe	Qo	Pe	Qo	Pe	Qo	Pe	Qo	Pe	Qo	Pe	Qo	Pe
VZH028CG	1800	30	5	-	-	1960	0.533	2440	0.519	3020	0.486	3690	0.426	4480	0.336	5380	0.211	-	-	-	-	-	-	-	-	-	-
			25	-	-	1570	0.766	2010	0.789	2520	0.804	3110	0.807	3800	0.791	4590	0.752	5490	0.686	6520	0.586	7670	0.447	8950	0.265	-	-
			45	-	-	-	-	-	-	1910	1.177	2410	1.208	2980	1.234	3640	1.249	4390	1.249	5250	1.228	6230	1.182	7330	1.104	-	-
			65	-	-	-	-	-	-	-	-	-	-	-	-	-	-	-	-	-	-	-	-	-	-	-	-
	3600	60	5	3180	1.027	4000	1.043	4990	1.029	6170	0.972	7550	0.858	9150	0.671	11000	0.398	-	-	-	-	-	-	-	-	-	-
			25	2550	1.474	3280	1.509	4150	1.553	5160	1.593	6360	1.614	7740	1.602	9340	1.541	11160	1.419	13240	1.219	15580	0.929	18220	0.532	-	-
			45	-	-	2530	2.268	3240	2.264	4080	2.295	5060	2.346	6200	2.402	7520	2.449	9030	2.472	10770	2.457	12740	2.390	14960	2.255	17460	2.040
			65	-	-	-	-	-	-	-	-	-	-	4510	3.523	5520	3.571	6700	3.635	8070	3.699	9640	3.749	11430	3.771	-	-
	6000	100	5	5320	1.922	6660	1.966	8280	1.956	10190	1.879	12440	1.722	15040	1.469	18040	1.109	-	-	-	-	-	-	-	-	-	-
			25	4300	2.588	5530	2.717	6970	2.830	8660	2.913	10620	2.952	12900	2.935	15530	2.847	18520	2.676	21930	2.407	25770	2.028	30080	1.524	-	-
			45	-	-	4270	3.768	5500	3.890	6920	4.018	8580	4.141	10490	4.245	12700	4.316	15230	4.341	18110	4.306	21380	4.198	25070	4.003	29210	3.709
			65	-	-	-	-	-	-	-	-	-	-	7700	5.949	9450	6.064	11470	6.172	13800	6.257	16470	6.306	19500	6.307	-	-
VZH035CG	1800	30	5	-	-	2480	0.648	3090	0.632	3820	0.591	4680	0.519	5670	0.410	6800	0.258	-	-	-	-	-	-	-	-	-	-
			25	-	-	1990	0.931	2540	0.959	3190	0.978	3940	0.981	4810	0.962	5810	0.914	6950	0.833	8250	0.712	9700	0.545	11330	0.325	-	-
			45	-	-	-	-	-	-	2420	1.432	3040	1.470	3770	1.501	4600	1.519	5560	1.519	6650	1.493	7880	1.436	9270	1.342		
			65	-	-	-	-	-	-	-	-	-	-	-	-	-	-	-	-	-	-	-	-	-	-	-	-
	3600	60	5	4030	1.226	5070	1.244	6320	1.228	7810	1.160	9550	1.024	11580	0.801	13920	0.475	-	-	-	-	-	-	-	-	-	-
			25	3230	1.759	4150	1.800	5250	1.853	6540	1.901	8050	1.926	9800	1.911	11820	1.839	14130	1.693	16760	1.455	19720	1.108	23060	0.635	-	-
			45	-	-	3200	2.706	4110	2.701	5170	2.738	6410	2.799	7850	2.865	9520	2.921	11440	2.949	13630	2.932	16120	2.851	18940	2.691	22110	2.434
			65	-	-	-	-	-	-	-	-	-	-	5700	4.204	6990	4.261	8480	4.337	10210	4.413	12200	4.473	14470	4.499	-	-
	6000	100	5	6730	2.297	8430	2.351	10480	2.339	12900	2.247	15740	2.058	19040	1.757	22840	1.326	-	-	-	-	-	-	-	-	-	-
			25	5450	3.094	7000	3.249	8820	3.384	10960	3.483	13450	3.530	16330	3.509	19650	3.404	23450	3.199	27760	2.878	32620	2.424	38080	1.822	-	-
			45	-	-	5400	4.506	6960	4.651	8760	4.805	10860	4.952	13280	5.076	16070	5.161	19270	5.190	22930	5.148	27070	5.019	31740	4.787	36980	4.434
			65	-	-	-	-	-	-	-	-	-	-	9740	7.112	11960	7.251	14520	7.379	17470	7.481	20840	7.540	24680	7.540	-	-
VZH044CG	1800	30	5	-	-	3180	0.812	3980	0.791	4910	0.740	6010	0.650	7290	0.513	8750	0.323	-	-	-	-	-	-	-	-	-	-
			25	-	-	2550	1.166	3270	1.201	4100	1.224	5070	1.228	6190	1.204	7480	1.145	8940	1.043	10610	0.891	12480	0.682	14580	0.407	-	-
			45	-	-	-	-	-	-	3110	1.792	3920	1.840	4850	1.879	5920	1.902	7150	1.901	8550	1.869	10140	1.798	11930	1.680		
			65	-	-	-	-	-	-	-	-	-	-	-	-	-	-	-	-	-	-	-	-	-	-	-	-
	3600	60	5	5180	1.540	6520	1.562	8130	1.542	10040	1.457	12280	1.286	14900	1.006	17900	0.596	-	-	-	-	-	-	-	-	-	-
			25	4150	2.209	5340	2.261	6750	2.327	8410	2.387	10350	2.419	12600	2.400	15200	2.310	18170	2.126	21550	1.827	25370	1.391	29650	0.797	-	-
			45	-	-	4110	3.398	5280	3.393	6650	3.439	8240	3.515	10090	3.599	12240	3.669	14710	3.704	17530	3.682	20730	3.581	24360	3.380	28430	3.056
			65	-	-	-	-	-	-	-	-	-	-	7330	5.280	8990	5.352	10910	5.447	13130	5.543	15690	5.618	18610	5.651	-	-
	6000	100	5	8650	2.897	10850	2.964	13470	2.950	16590	2.834	20240	2.596	24490	2.215	29370	1.672	-	-	-	-	-	-	-	-	-	-
			25	7010	3.902	9000	4.097	11340	4.267	14090	4.392	17300	4.451	21010	4.425	25280	4.293	30160	4.034	35700	3.629	41950	3.057	48970	2.298	-	-
			45	-	-	6950	5.682	8950	5.865	11270	6.059	13960	6.244	17080	6.401	20670	6.508	24790	6.545	29480	6.492	34810	6.329	40820	6.036	47560	5.592
			65	-	-	-	-	-	-	-	-	-	-	12530	8.969	15380	9.143	18680	9.305	22470	9.433	26800	9.508	31740	9.509	-	-

To: Evaporating temperature in °C
Tc: Condensing temperature in °C
Qo: Cooling capacity in W
Rating point: ARI@60 rps
To/Tc/SH/SC: 7.2°C/54.4°C/11.1K/8.3K@60rps

Superheat = 11.1 K
Subcooling = 8.3 K
Pe: Power input in kW (with drive loss)

*only for index B
Note: All performance test data after run-in 72hr

VZH028-035-044G/J/H OSG version

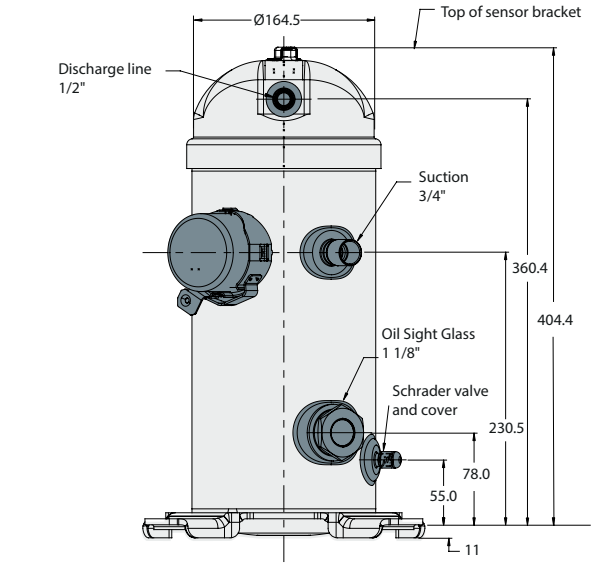

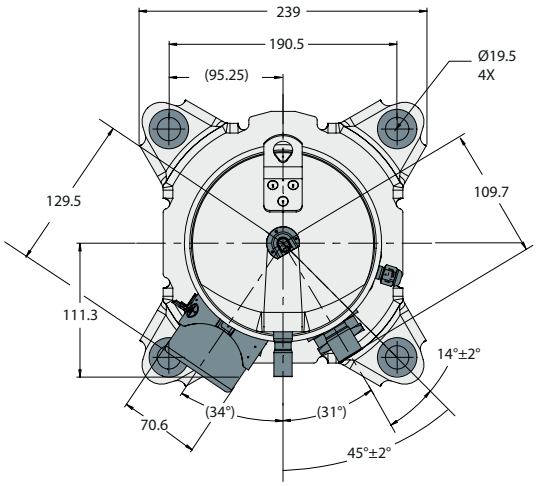

VZH028-035-044G/J OLS version

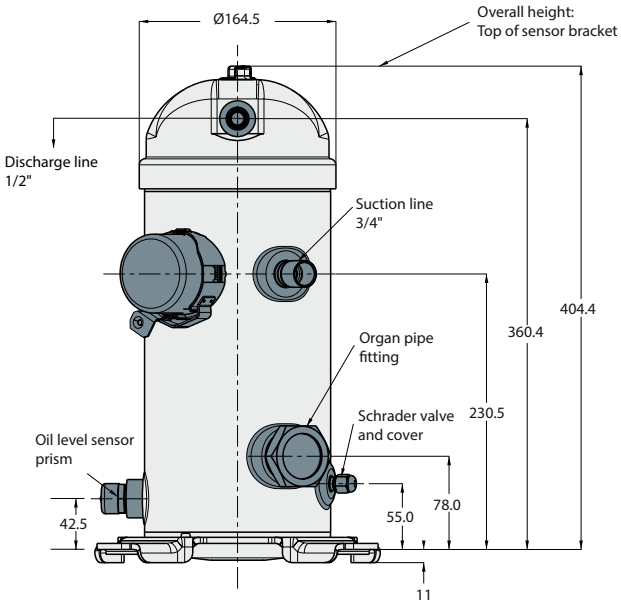

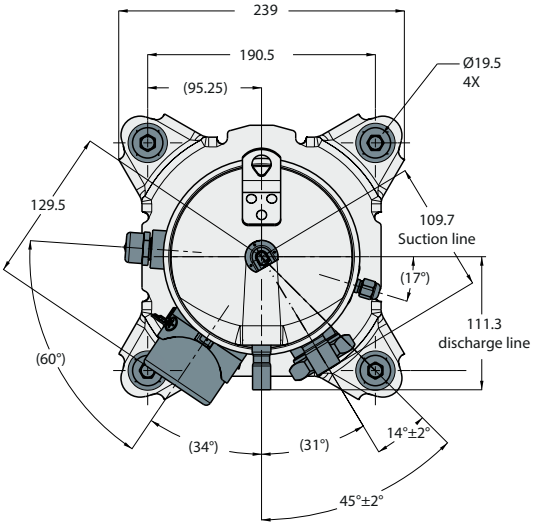

Note: Manifolding drawing is preliminary version

All dimensions in mm

Terminal box (quick connect spade terminals)

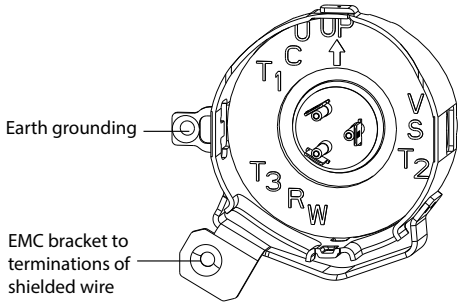

Mounting Grommet

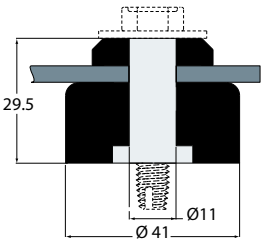

Recommended torque for mounting bolts: 11 Nm (±1 Nm)

Sight glass / Oil level sensor

VZH compressors OSG versions come equipped with a threaded oil sight glass with 1"1/8 – 18 UNEF connection. It can be used for a visual check of oil amount and condition.

VZH oil level sensor version compressors come equipped with a screw-in optical part on oil level switch port located below the electrical box.

Schrader

The oil fill connection and gauge port is a 1/4" male flare connector incorporating a schrader valve.

Suction & discharge connections

VZH compressors are all delivered with suction and discharge brazed connections only. They are copper-plated steel connections.

Rotolock adaptors are available, refer to the "Accessories" section.

	Suction	Discharge
VZH028-035-044	3/4"	1/2"

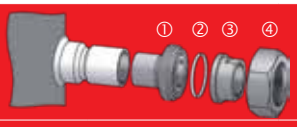

Compressor models	Brazed connection size		Rotolock adaptor set (①adaptor, ②gasket, ③sleeve, ④nut)			Rotolock adaptor (① adaptor only)
			Rotolock	Solder sleeve ODF	Code Number	Code Number
VZH028-044	Suction	3/4"	1-1/4"	3/4"	120Z0126	120Z0366
	Discharge	1/2"	1"	1/2"		120Z0365

Frequency converter dimensions

Frequency converter dimensions depend on supply voltage, IP rating and power. The table below gives an overview of the overall dimensions and different drive enclosures (H3, H4, H5, A3 and B3). Details for each drive enclosure are on the following pages.

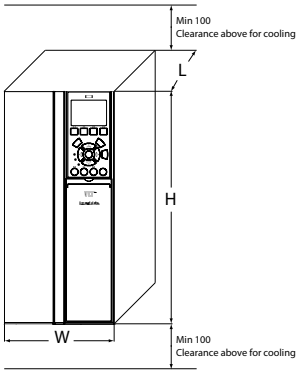

Drive supply voltage	Drive power kW	Compressor voltage code	Compressor model	IP20			
				Drive enclosure	Overall drive size (H x W x L) mm	Overall drive size (H x W x L) mm incl. decoupling plate	Clearance above/ below (mm/inch)
T2: 200-240/3/50-60	6	J	VZH028	H4	296x135x241	359x135x241	100/4
	7.5		VZH035	H4	296x135x241	359x135x241	100/4
	10		VZH044	H5	334x150x255	402x150x255	100/4
T4: 380-480/3/50-60	6	G	VZH028	H3	255x100x206	329x100x206	100/4
	7.5		VZH035	H3	255x100x206	329x100x206	100/4
	10		VZH044	H4	296x135x241	359x135x241	100/4
T6: 525-600/3/50-60	7.5	H	VZH028	A3	268x130x205	374x130x205	100/4
	11		VZH035	B3	399x165x249	420x165x249	100/4
	11		VZH044	B3	399x165x249	420x165x249	100/4

CDS803 frequency converter

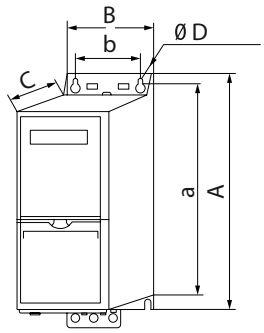

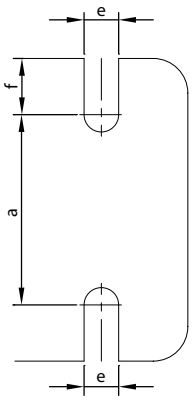

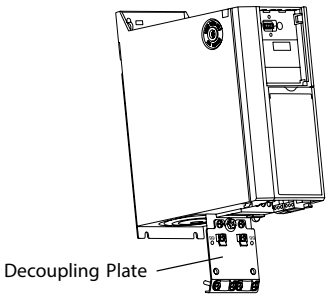

Decoupling Plate Illustration

Enclosure		Height (mm)			Width (mm)		Depth (mm)	Mounting hole (mm)			Max. Weight
Frame	IP Class	A	A[1)]	a	B	b	C	d	e	f	kg
H3	IP20	255	329	240	100	74	206	11	5.5	8.1	4.5
H4	IP20	296	359	275	135	105	241	12.6	7	8.4	7.9
H5	IP20	334	402	314	150	120	255	12.6	7	8.5	9.5

A[1)] Including decoupling plate.

The dimensions are only for the physical units, but when installing in an application it is necessary to add space for free air passage both above and below the units. The amount of space for free air passage is listed in "frequency converter dimensions - Clearance above/below (mm/inch)".

CDS303 frequency converter

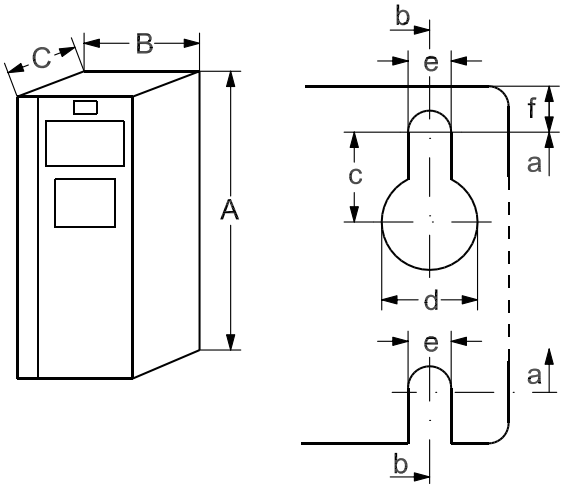

Enclosure		Height (mm)			Width (mm)		Depth (mm)	Mounting hole (mm)			Max. Weight
Frame	IP Class	A	A[1)]	a	B	b	C	d	e	f	kg
A3	IP20	268	374	257	130	110	205	11	5.5	9	6.6
B3	IP20	399	420	380	165	140	249	12	6.8	7.9	12

A[1)] Including decoupling plate.

The dimensions are only for the physical units, but when installing in an application it is necessary to add space for free air passage both above and below the units. The amount of space for free air passage is listed in "frequency converter dimensions - Clearance above/below (mm/inch)".

Supply voltage

Because VZH compressors are powered by a frequency converter, the mains frequency, 50 or 60 Hz, is no longer an issue. Only the mains voltage is to be taken into account. With 3 motor voltage codes, the most common mains voltages and frequencies are covered. Never connect the VZH compressor directly to the mains power supply in the case motor burns out.

Voltage code	Mains voltage range of drive
J	200-240 V / 3 ph / 50 Hz & 200-240 V / 3 ph / 60 Hz (±10%)
G	380-480 V / 3 ph / 50 Hz & 380-480 V / 3 ph / 60 Hz (±10%)
H	525-600 V / 3ph / 50Hz & 525-600 V /3ph / 60Hz (±10%)

Compressor electrical specifications

Compressor rated voltage (V)	Model	RW(Ω) at 20°C line to line	RLA (A)	Max Operating Current (A)
414 V max.	VZH044CG /VZH044CH	0.708±7%	15.5	17.8
	VZH035CG /VZH035CH		12.4	14.3
	VZH028CG /VZH028CH		10.3	11.8
210 V max.	VZH044CJ	0.185±7%	33.3	36
	VZH035CJ		26.6	30.6
	VZH028CJ		22.0	25.3

RW: Winding resistance per winding, measured at motor terminals
RLA: Rated load Amp

RLA (Rated Load Amp)

Rated Load Amp value is the current value at maximum load, in the operating envelope, and at maximum speed and maximum drive input voltage.

MOC (Max Operating Current)

Max operating current is the maximum continuous current which is 115% (VZH044-J is 108%) of RLA. This value is printed on compressor nameplate.

Wiring connections

VZH scroll compressors will only compress gas while rotating counter-clockwise (when viewed from the top of the compressor).
The drawing shows electrical terminal labeling and should be used as a reference when wiring the compressor.
U, V & W of the drive and the compressor must be connected accordingly.
For use of EMC bracket with shielded cable, it is recommended to have a thread cutting screw (#10-32) having a torque of 3NM.

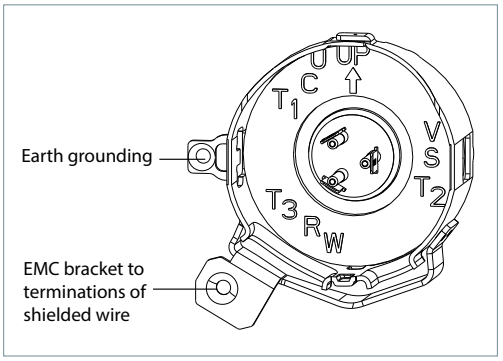

Terminal cover mounting

The terminal cover and gasket should be installed prior to operation of the compressor. The terminal cover has two outside tabs, 180 degrees apart, that engage the terminal fence. When installing the cover, check that it is not pinching the lead wires.

Terminal cover removal

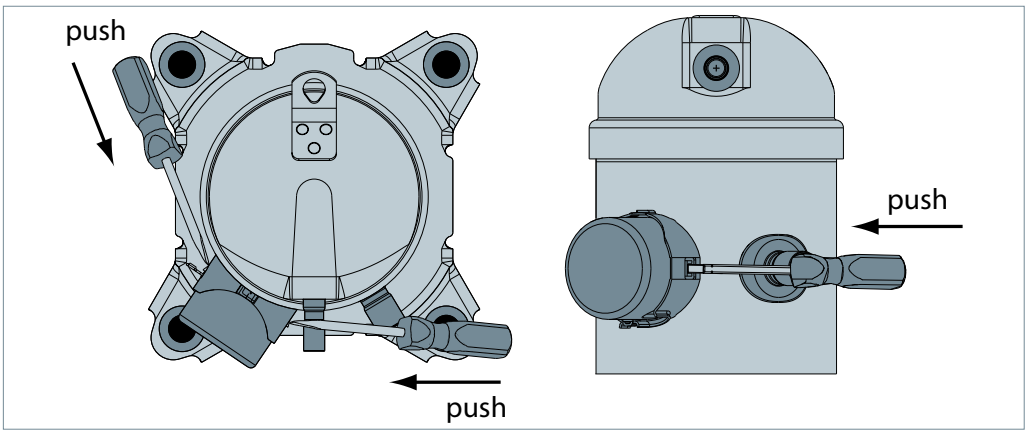

Fuses

Danfoss recommends using the fuses listed below to protect service personnel and property in case of component break-down in the frequency converter.

For circuit breakers, Moeller types have been tested and are recommended. Other types of circuit breakers may be used provided they limit the energy to a level equal to or lower than the Moeller types.

CDS 803	UL Compliant fuses					Recommended circuit breaker
	UL				Non UL	IP20
	Bussmann	Bussmann	Bussmann	Bussmann	Max fuse	
	Type RK5	Type RK1	Type J	Type T	Type G	Moeller type
3x200-240 V IP20						
4 TR/VZH028	FRS-R-50	KTN-R50	JKS-50	JJN-50	50	PKZM4-50
5 TR/VZH035	FRS-R-50	KTN-R50	JKS-50	JJN-50	50	PKZM4-50
6.5 TR/VZH044	FRS-R-60	KTN-R60	JKS-60	JJN-60	60	PKZM4-63
3x380-480 V IP20						
4 TR/VZH028	FRS-R-25	KTS-R25	JKS-25	JJS-25	25	PKZM4-25
5 TR/VZH035	FRS-R-25	KTS-R25	JKS-25	JJS-25	25	PKZM4-25
6.5 TR/VZH044	FRS-R-30	KTS-R30	JKS-30	JJS-30	30	PKZM4-36

CDS 303		EN50178 Compliant fuses		UL Compliant fuses						Recommended circuit breaker
				Bussmann			SIBA	Little fuse		
		Size	Type	Type RK1	Type J	Type T	Type RK1	Type RK1	Type RK1	Moeller type
525-600V	CDS303-7.5kW	20A	gG	KTS-R20	JKS-20	JJS-20	5017906-020	KLSR020	A6K-20R	PKZM4-50
	CDS303-11kW	30A	gG	KTS-R30	JKS-30	JJS-30	5017906-030	KLSR030	A6K-30R	PKZM4-50

Wire sizes

Below table lists recommended wiring sizes for the motor compressor power supply cables. These wiring sizes are valid for a cable length up to 20m.

	From network to frequency converter			From frequency converter to compressor		
	Type	mm^2	AWG	Type	mm^2	AWG
200 - 240 V	CDS803-6kW(IP20)	6	10	VZH028-J	6	10
	CDS803-7.5kW(IP20)	6	10	VZH035-J	6	10
	CDS803-10kW(IP20)	6	10	VZH044-J	6	10
380 - 400 V	CDS803-6kW(IP20)	4	10	VZH028-G	4	10
	CDS803-7.5kW(IP20)	4	10	VZH035-G	4	10
	CDS803-10kW(IP20)	4	10	VZH044-G	4	10
525 - 600 V	CDS303-7.5kW(IP20)	4	10	VZH028-H	6	10
	CDS303-11kW(IP20)	4	10	VZH035-H	6	10
	CDS303-11kW(IP20)	4	10	VZH044-H	6	10

Note: 1.The wire size here is the guideline but not the actual cable required. The required cable size should be specified by the OEM depending on the unit design, ambient temperature, the wire material, current, etc.

Wiring & EMC protection

The motor compressor power supply from the CDS803/303 frequency converter to the VZH compressor must be done with a braided screened/shielded cable. This cable needs to have its screen/shielding conduit connected to earth on both ends. Avoid terminating this cable connection with twisting ends (pigtails) because that would result in an antenna phenomenon and decrease the effectiveness of the cable.

Control cables to the CDS803/303 frequency converter must use the same installation principles as the motor power supply cable.

The motor compressor cable must be installed in a conduit separated from the control and mains cables.

Physical installation of the frequency converter on the mounting plate must ensure good electrical contact between the mounting plate and the metal chassis of the converter. Use star-washers and galvanically conductive installation plates to secure good electrical connections. Refer to instructions MG18N202/MG34M402 for tightening torques and screw sizes.

Note that the CDS803/303 must be mounted on a plain wall to ensure a good air flow through its heat exchanger.

EMC correct installation of an IP20 frequency drive CDS803

EMC qualification reports are available upon request to Danfoss technical support.

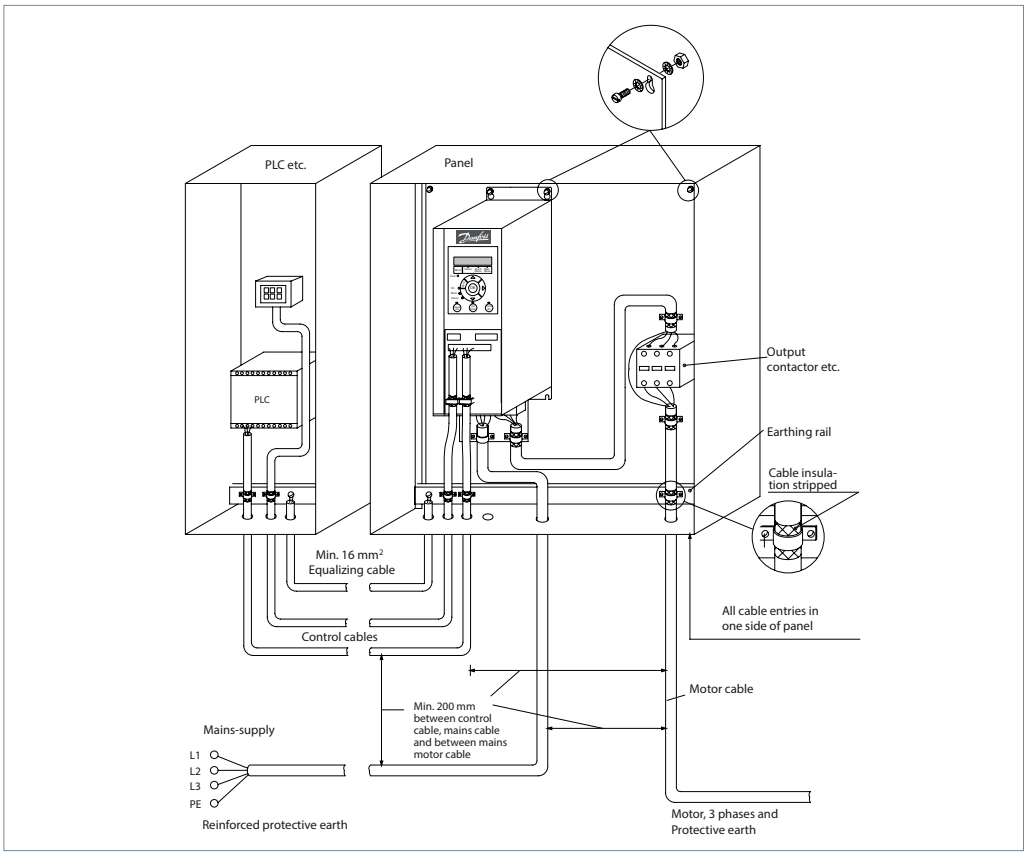

Wiring diagram of CDS803

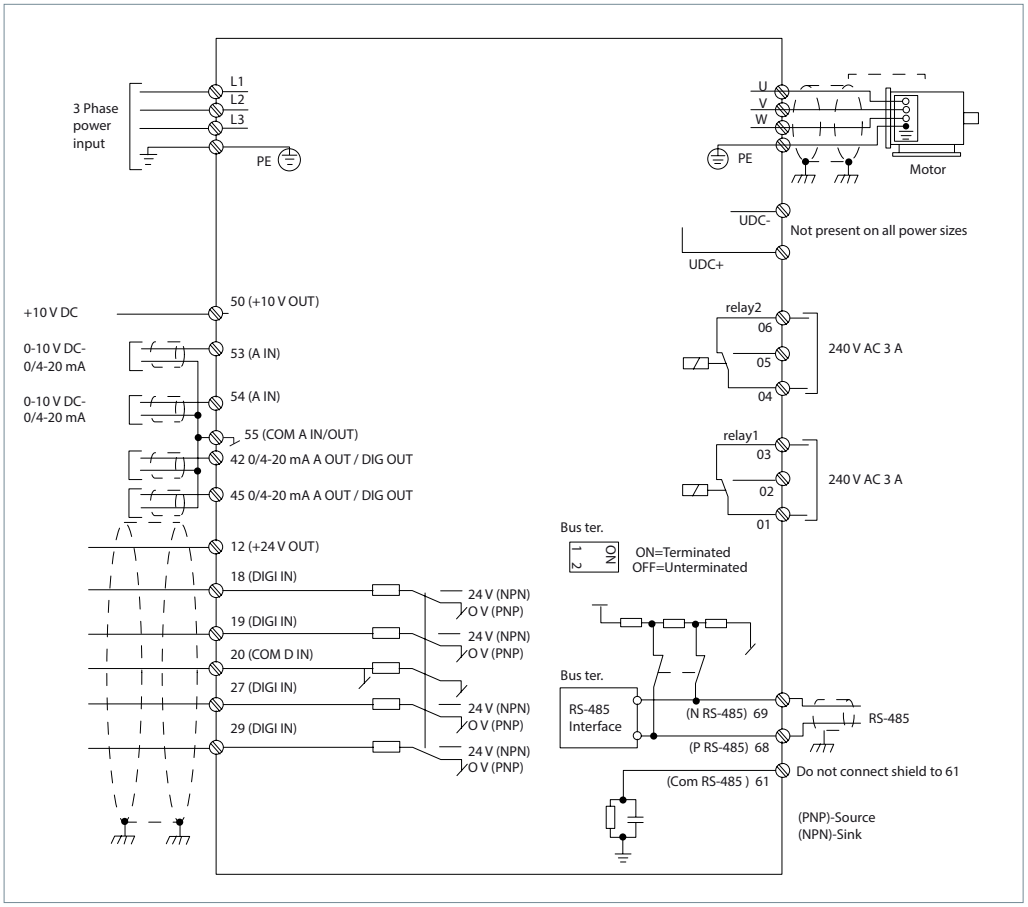

Wiring connections of CDS803

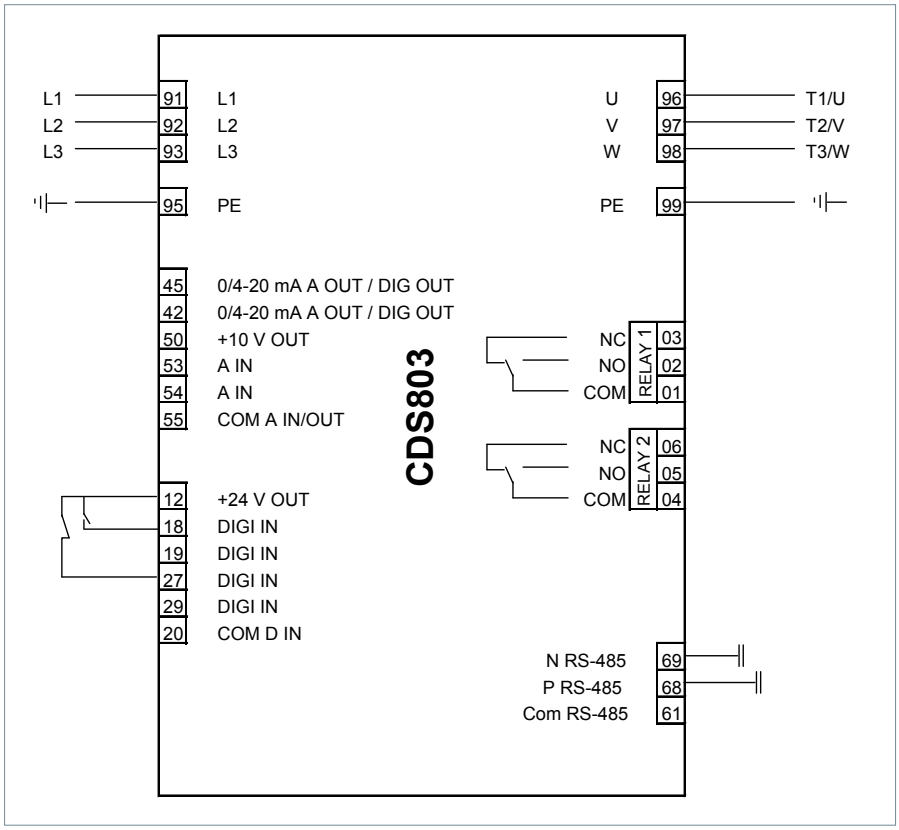

Legends:

A:	Analog
DIGI:	Digital
IN:	Input
OUT:	Output
COM:	Common
NC:	Normally-closed
NO:	Normally-open

		Open loop	Process loop
91,92,93	3 phases mains input	x	x
95	Earth	x	x
42,45	0/4-20 mA Analague Output or Digital Output	-	-
50	+10V DC Output	-	-
53	0-10V or 4-20mA Analague Input	x	-
54	0-10V or 4-20mA Analague Input	-	x
55	Com Analague In/Out	x	-
12	+24V output	-	-
18	External On/Off(NO)	x	x
19	Digital Input	-	-
27	Safety Device e.g.: HP/LP switch	x	x
29	Digital Input	-	-
20	Com Digital Input	-	-
98	To Compressor T3	x	x
97	To Compressor T2	x	x
96	To Compressor T1	x	x
99	Earth	x	x
03,02,01	Relay 1	-	-
06,05,04	Relay 2	-	-
69,68	RS485 Bus	-	-
61	RS485 Bus Com	-	-

-: Optional connection
X: Mandatory connection

The CDS803 frequency converter is factory preset with parameters for the open loop control principle. The process loop control principle can be selected by changing parameters in the "Quick menu."
Open loop: preset on input 53
0 - 10 V control
Frequency converter in slave mode
Process loop: preset on input 54
4 - 20 mA control
Frequency converter under own PID controller

EMC correct installation of an IP20 frequency drive CDS303

EMC qualification reports are available upon request to Danfoss technical support.

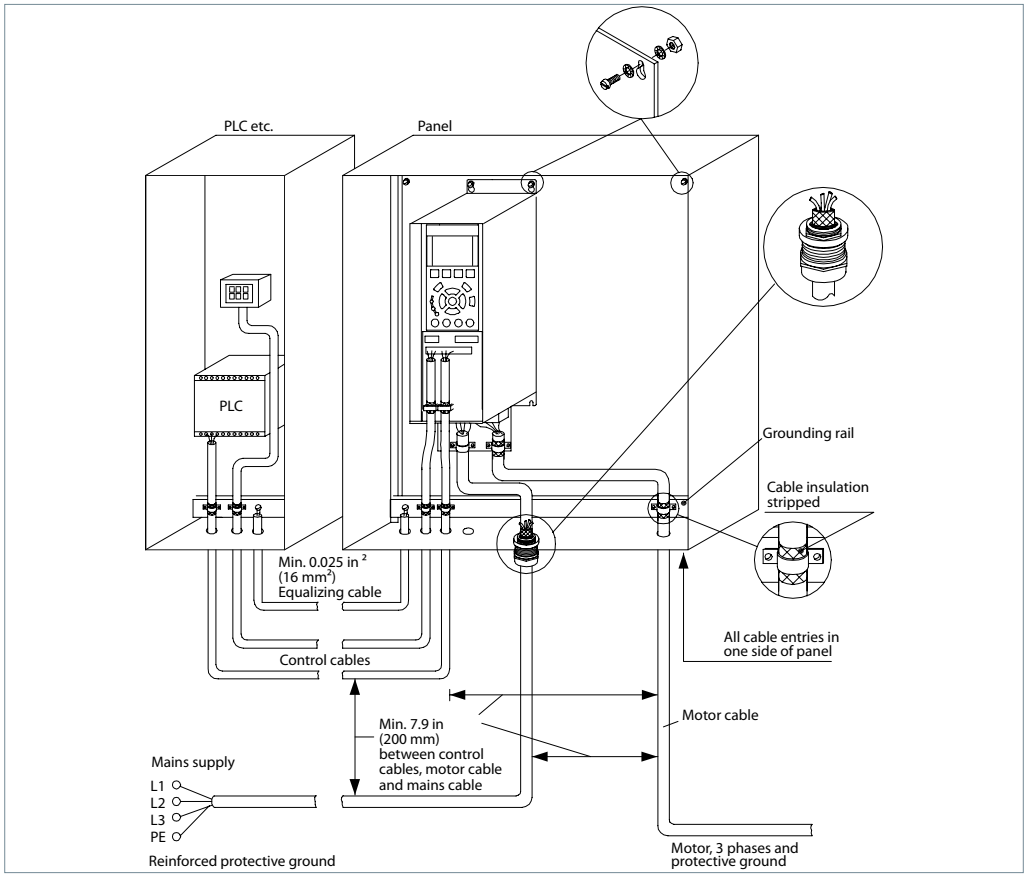

Wiring diagram of CDS303

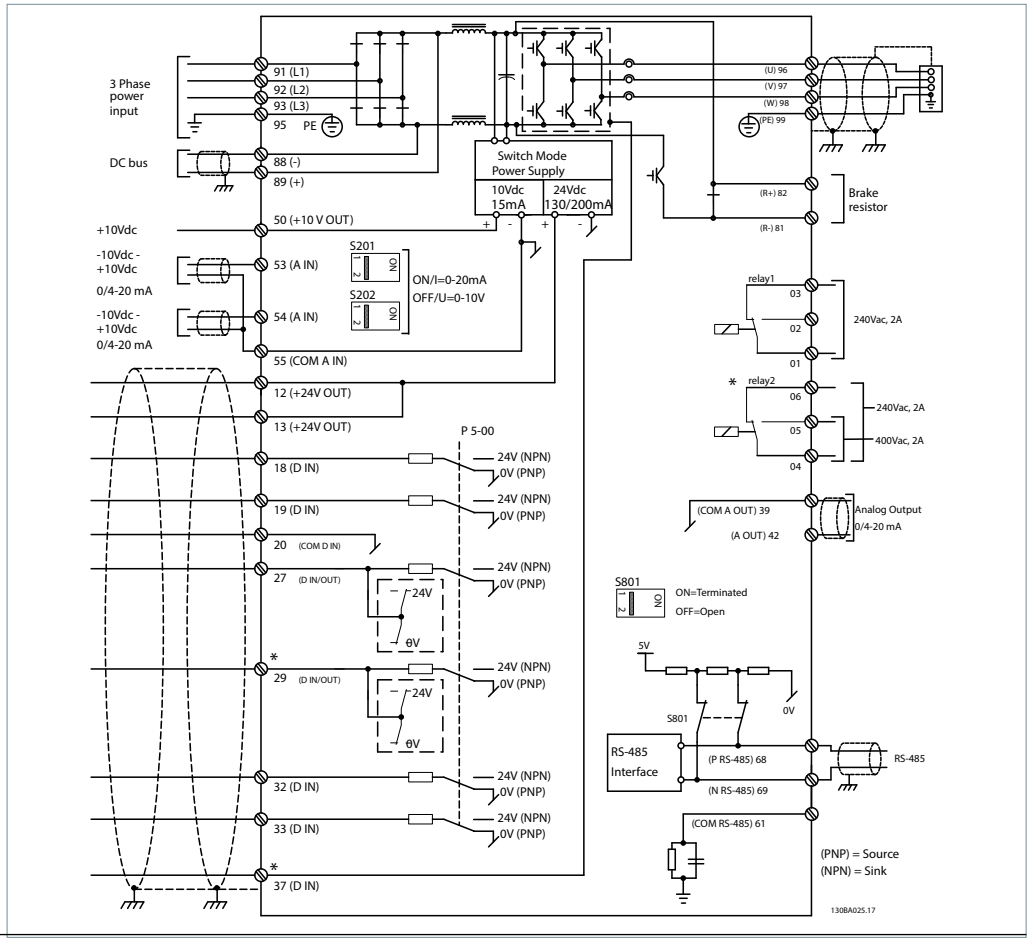

Wiring connections of CDS303

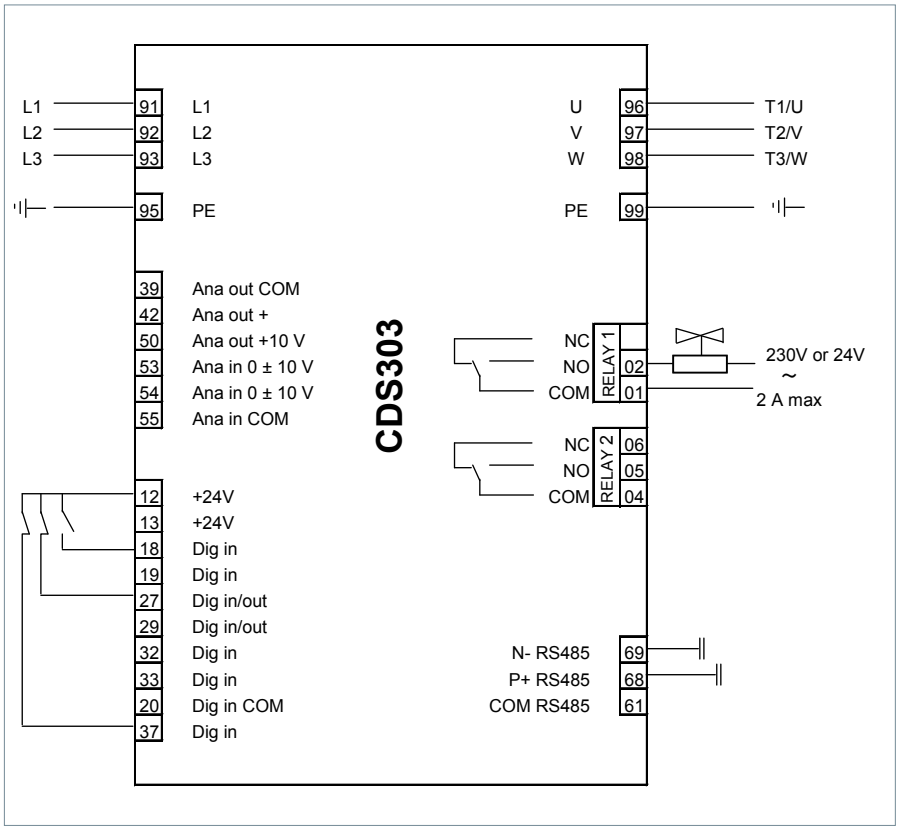

Legends:

Ana:	Analogue
Dig:	Digital
in:	Input
out:	Output
COM:	Common
NC:	Normally-closed
NO:	Normally-open

		Open loop	Process loop
91, 92, 93	3 Phase mains input	X	X
95	Earth	X	X
39, 42	Analogue output	-	-
50	Analogue output	-	-
53	PLC+ (0 to 10 V)	X	-
54	Sensor -	-	X
55	PLC-	X	-
12	HP/LP switch	X	X
12	External On/Off (NO)	X	X
13	Factory bridged to 37	X	X
13	Sensor +	-	X
18	External On/Off (NO)	X	X
19	Digital input	-	-
27	LP switch (NC) / safety devices	X	X
29	Digital input/output	-	-
32, 33	Digital input	-	-
20	Digital input Common	-	-
37	Factory bridged to 13 / HP switch	X	X
98	To compressor terminal T3	X	X
97	To compressor terminal T2	X	X
96	To compressor terminal T1	X	X
99	To compressor earth connection	X	X
02, 01	Relay 1 to oil solenoid valve	X	X
06, 05, 04	Relay 2	-	-
69, 68	RS485 Bus	-	-
61	RS485 Bus Common	-	-

-: Optional connection
X: Mandatory connection

The CDS303 frequency converter is factory preset with parameters for the open loop control principle. The process loop control principle can be selected by changing parameters in the «Quick menu».
Open loop: preset on input 53
0 - 10 V control
Frequency converter in slave mode
Process loop: preset on input 54
4 - 20 mA control
Frequency converter under own PID controller

T37 is CE and UL approved for STO, Safety Torque Function

Electrical connections

VZH028/035/044 scroll compressors are designed to operate without any assistance.

Soft-start control

The CDS803/CDS303 frequency converter generates by design a compressor soft start with an default initial ramp up of 7.5s to 50 rps.

Current inrush will not exceed the frequency converter maximum current.

Basically seen from the mains the inrush peak reach a level which is only a few percent more than the rated nominal current.

Phase sequency and reverse rotation protection

The compressor will only operate properly in a single direction. If electrical connections are done correctly between the drive and the compressor terminals (compressor and drive terminals U, V & W matching), the drive will provide correct phase supply to the compressor, and reverse rotation will be not possible:

- CDS terminal U (96) to VZH terminal T1/U
- CDS terminal V (97) to VZH terminal T2/V
- CDS terminal W (98) to VZH terminal T3/W

If compressor and drive U, V & W terminals are not matching, the compressor can operate in a reverse rotation. This results in excessive noise, no pressure differential between suction and discharge, and suction line warming rather than immediate cooling. The compressor can be rapidly damaged in these conditions. To protect compressors from reverse rotation, one of below actions is required:

- Use pressure sensors to monitor pressure difference between discharge and suction of the compressor, and for normal operation, discharge pressure should be at least 1 bar higher than suction pressure within 30 s running after compressor starting.

Mains connection to the CDS frequency converter order has no influence on the output phase sequence which is managed by the frequency converter.

IP rating

The compressor terminal box IP rating according to IEC529 is IP22.

Element	Numerals or letters	Meaning for the protection of equipment
First characteristic numeral	0 1 2 3 4 5 6	Against ingress of solid foreign objects (non protected) ≥ 50 mm diameter ≥ 12.6 mm diameter ≥ 2.5 mm diameter ≥ 1.0 mm diameter dust protected dust tight
Second characteristic numeral	0 1 2 3 4 5 6 7 8	Agains ingress of water with harmful effects (non protected vertically dripping dripping (15° tilted) spaying splashing jetting powerful jetting temporary immersion continuous immersion

Motor protection

VZH scroll compressors are not equipped with an internal motor protector. Motor protection is provided by the variable speed drive. All parameters are factory preset in order to guaranty locked rotor or overload current protection.

When a warning situation is reached in the current control, the CDS frequency converter will automatically reduce the compressor speed in order to keep the motor current of the compressor below the maximum allowed.

Anti-reverse protection

In some cases when compressors stop under low mass flow low speed condition, discharge valve may not seal discharge port fast enough, thus compressors may run in a reverse rotation due to the residual pressure difference and generate a big noise. Running in the wrong direction will reduce the reliability and lifetime of the compressor. The drive shall prevent the compressors scroll set from running the wrong way during stop with anti reverse protection.

To activate the function, the customer must be able to enable and disable the ANTI-REVERSE PROTECTION.

Temperature protection

If the temperature in the drive is too high, an alarm (CDS303: Alarm 29, Heatsink Temp. CDS803: Alarm 69, Pwr. Card Temp) will be seen to trip the drive. When the drive shows this alarm, it's suggested that OEM controller has to be programmed based on the reading of the heatsink temperature received from the drive to lower the load to avoid a trip-lock. Contact Danfoss for more details.

Voltage imbalance

The maximum allowable voltage imbalance between each phase is 3%. Voltage imbalance causes high amperage over one or several phases, which in turn leads to overheating and possible drive damage.

Mains imbalance function in CDS frequency converter can be set to "[0] Trip" or "[1] Warning" in 14.12 parameter. It is, by default, factory preset to "[1] Warning".

Then the compressor electrical motor is never affected by main voltage imbalance situations which are made completely transparent by the frequency converter.

Approvals and certificates

VZH compressors comply with the following approvals and certificates.

CE (European Directive)	CE	All VZH models
UL (Underwriters Laboratories)	c UL us	All VZH models
EMC 2014/30/EU		VZH code G & code J
CCC		VZH code G

Low voltage directive 2014/35/EU

Products	VZH028-035-044
Declaration of conformity ref. Low voltage directive 2014/35/EU	Contact Danfoss

Internal free volume

Products	Internal free volume at LP side without oil (liter)
VZH028	3.2
VZH035	3.2
VZH044	3.2

Application envelopes

The operating envelopes for VZH scroll compressors are given in the figures below, where the condensing and evaporating temperatures represent the range for steady state operation. Under transient conditions, such as start-up and defrost, the compressor may operate outside this envelope for short periods.
The figures below show the operating envelopes for VZH compressors with refrigerants R410A.
Due to bearing loads and scroll stability, there will be speed restrictions on the envelops.
The operating limits serve to define the envelope within which reliable operation of the compressor is guaranteed:

- Maximum discharge gas temperature: +135°C.
- Minimum suction superheat should be above 5 K and minimum sump superheat should refer to the "off-cycle migration" chapter due to the risk of liquid flood back.
- Attention to suction line insulation to reduce useless superheat.
- Minimum and maximum evaporating and condensing temperatures as per the operating envelopes.
- VZH drive can only protect the compressor from over current. Customers need to have a high pressure, low pressure sensor and discharge temperature thermostat to fully protect the envelop. Since out of map running will threaten the reliability of compressor, customers must qualify map protection under all extreme conditions.

Application envelopes for index A

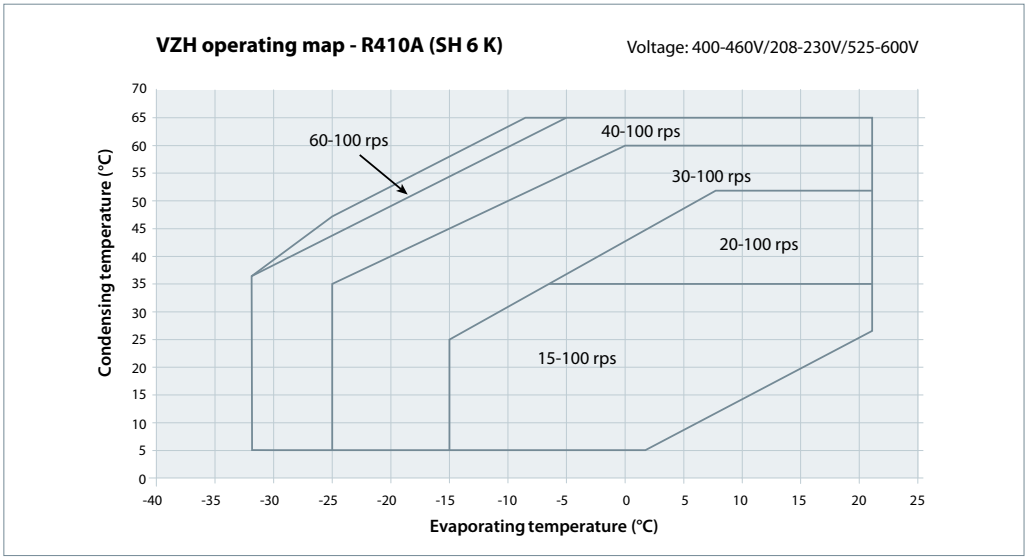

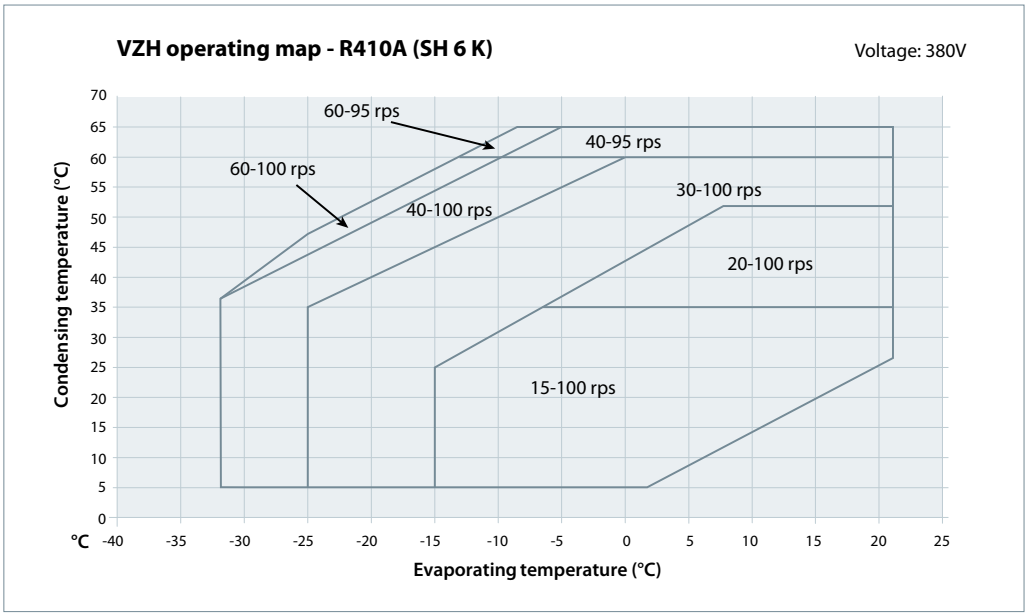

Application envelopes for index B

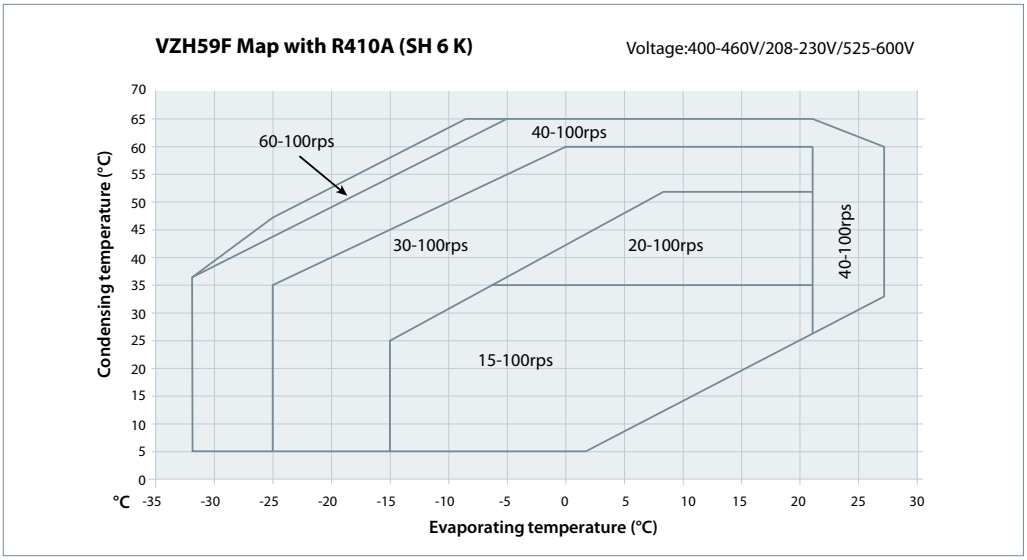

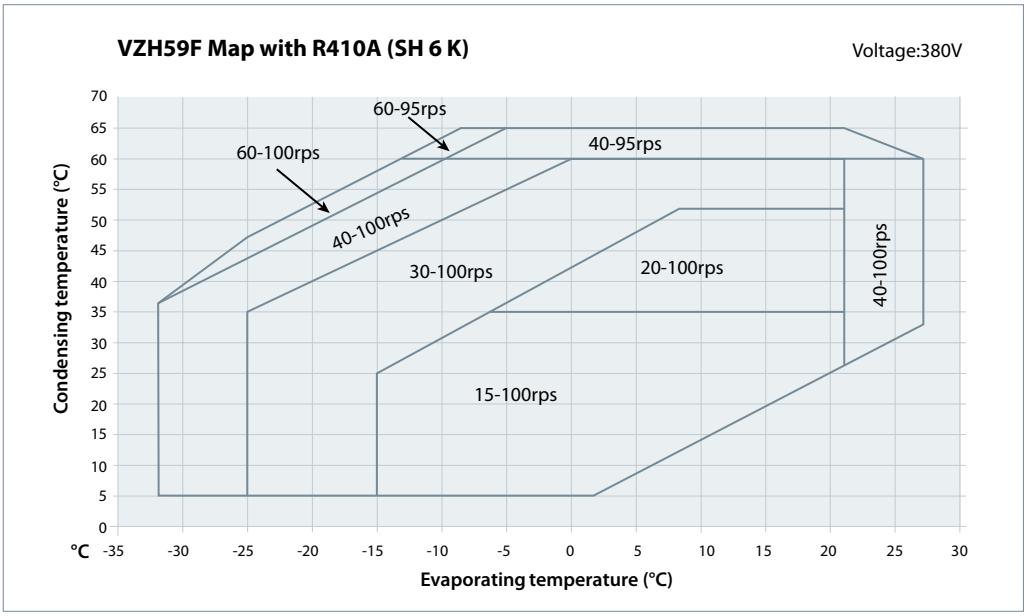

Short cycle timer function

Short cycle control is provided directly by the CDS frequency converter, when parameter 28-00 is enabled.
The function is factory set to enabled, with minimum running time to 60 seconds and the interval between starts to 300 seconds.

Short cycle settings are accessible in the parameter 28.0x list, in the "compressor functions" menu.
If system is fully controlled by an external main controller, it is recommended to limit the start/stop frequency to 12 times per hour.

Discharge gas thermostat

Discharge gas temperature (DGT) protection is required if the high and low pressure switch settings do not protect the compressor against operations beyond its specific application envelope. Please refer to the examples below, which illustrate where DGT protection is required (Ex. 1) and where it is not (Ex. 2). Please notice the envelope boundaries change based on different speed limits.

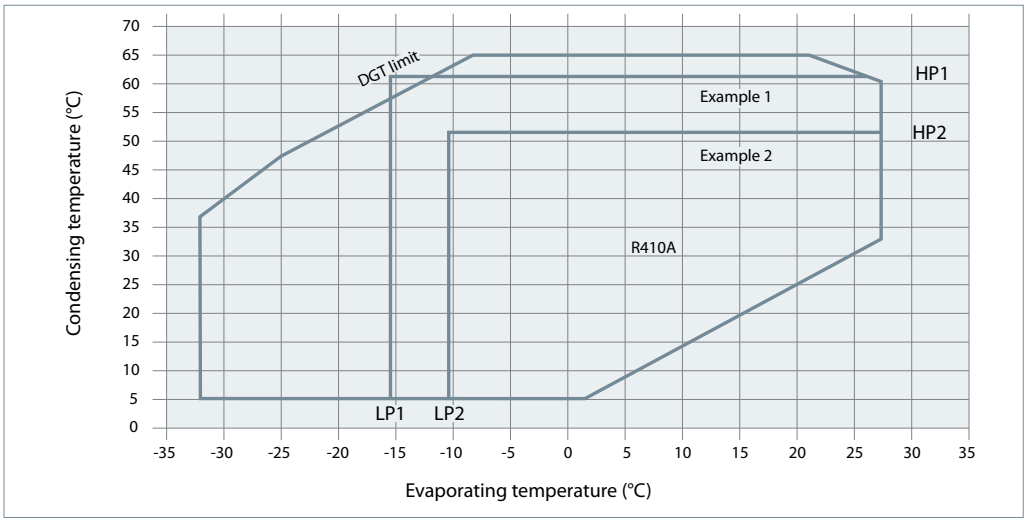

Example 1 (R410A, SH = 6 K)
LP switch setting:
LP1 = 3.3 bar (g) (-15.5°C)
HP switch setting:
HP1 = 38 bar (g) (62°C)
Risk of operation beyond the application envelope.
DGT protection required.

Example 2 (R410A, SH = 6 K)
LP switch setting:
LP2 = 4.6 bar (g) (-10.5°C)
HP switch setting:
HP2 = 31 bar (g) (52°C)
No risk of operation beyond the application envelope.
No DGT protection required.

The discharge gas temperature must not exceed 135°C.

A discharge gas temperature protection device must be installed on all heat pumps. In reversible air-to-air and air-to-water heat pumps, the discharge temperature must be monitored during development test by the equipment manufacturer.

The compressor must not be allowed to cycle on the discharge gas thermostat. Continuous operations beyond the compressor's operating range will cause serious damage to the compressor.

VZH028-044 can install a discharge sensor/ dome sensor at the top of shell through a bracket and the sensor has to been connected and controlled by OEM controller. By installing it at the top of shell, the discharge sensor can monitor discharge temperature and work with OEM controller to limit discharge temperature within 135°C. A customer might select NTC thermistor, 10KOhm@25°C type from "TOD Company" and this type of sensor could be fit into VZH top shell directly. The thermostat could also be attached to the discharge line within 150 mm from the compressor discharge port and must be thermally insulated and tightly fixed to the pipe.

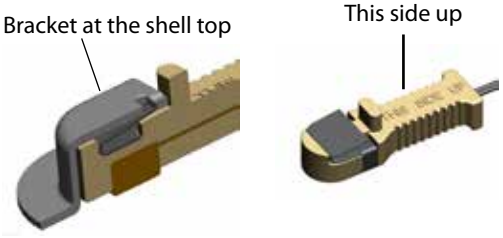

Oil return management function (single compressor)

An insufficient oil level can be the result of oil depositing itself in pipes and heat exchangers or low velocity of compressors. The oil return management could be achieved by increasing velocity for short periods, at regular time intervals.

CDS integrates oil return management function together with compressor internal lubrication protection.

Internal lubrication protection: If compressor runs below 40 rps (ORM Min Speed Limit, 28-15) for more than 120 minutes (low speed running time, 28-11), then CDS internal lubrication function will accelerate compressor speed to 60 rps (minimum ORM Boost Speed, 28-17) for 1 minute (minimum duration, includes ramp up time, 28-13) to guarantee compressor inner parts get lubricated. In case slow acceleration condition, please make sure compressor maintain minimum speed 40 rps (80Hz) for at least 1 minute running.

Oil return function: To double ensure well lubrication, compressor speed will boost to 60 rps (minimum ORM Boost Speed, 28-17) at a fixed time intervals (as programmed in parameter 28-12, default 24 hrs) any way. OEM could set 28-17 to a higher speed, such as 70 rps to secure oil management

According to different application requirements, OEM can either add oil separator (including to add more oil in the system) or adjust oil return parameters or might need both actions to keep oil safety for compressor.

Oil management related parameters, 28-11, 28-12, 28-13,28-15 (CDS303 only), 28-17 (CDS303 only) could also be programmed by OEM.

Considering oil return risk, a split system with more than 10 m piping length requires mandatory application approval by Danfoss application specialists.

ID	Name	Factory setup	Unit
2810	Oil return management	ON	
2811	Low speed running time	120	min
2812	Fixed boost interval	24	h
2813	Boost duration	60	s
2815	ORM min speed limit	80	Hz
2817	ORM boost speed (Hz)	120	Hz

High and low pressure protection

High pressure

According to EN378-2, a high-pressure (HP) safety switch is required to shut down the compressor. The high-pressure switch can be set to lower values depending on the application and ambient conditions. The HP switch must either be placed in a lockout circuit or consist of a manual reset device to prevent cycling around the high-pressure limit. If a discharge valve is used, the HP switch must be connected to the service valve gauge port, which must not be isolated. The HP switch can be connected to the CDS803 input 27/ CDS303 input 37 or an external contactor which could be set before or after the drive.

Please note port 27 of CDS803 is not UL certificated and when connected with high pressure switch, no delay is permitted. OEM need to set port 27 to "coast reverse/coast and reset inverse" to get rid of minimum running time restriction.

For CDS303, port 37 is CE and UL approved for safety torque function.

If the contactor is placed between the drive and compressor, to make sure a proper start up, the contactor must be power on ahead of the drive gets fed at least 3 seconds earlier.

When the contactor acts as a high pressure switch, it has to be normally close switch. The contactor will only open when high pressure triggers or power off.

In case of HP cut out, the output contactor will open while compressor is running, thus a Motor Phase Loss alarm will occur.

Low pressure

A low-pressure (LP) safety switch must be used. Deep vacuum operations of a scroll compressor can cause internal electrical arcing and scroll instability. VZH compressors exhibit high volumetric efficiency and may draw very low vacuum levels, which could induce such a problem. The minimum low-pressure safety switch (loss-of-charge safety switch) setting is given in the following table. For systems without pump-down, the LP safety switch must either be a manual lockout device or an automatic switch wired into an electrical lockout circuit. The LP switch tolerance must not allow for vacuum operations of the compressor. LP switch settings for pump-down cycles with automatic reset are also listed in the table below. The lock-out circuit or LP switch or series with other safety devices could be connected to CDS803/CDS303 input 27. The low pressure switch must have the highest priority that shall not be by passed. It means when low pressure switch is activated, compressor minimum running time should not work. OEM need to set port 27 to "coast reverse/ coast and reset inverse" to get rid of minimum running time restriction.

Pressure settings

Pressure settings		R410A
Working pressure range high side	bar (g)	8.3 - 41.1 bar
Working pressure range low side	bar (g)	1.5-13.9 bar / 1.5-16.6 bar***
Maximum high pressure safety switch setting	bar (g)	43.75
Minimum low pressure safety switch setting *	bar (g)	1.0
Minimum low pressure pump-down switch setting **	bar (g)	1.18

* LP safety switch shall never be bypassed.
** Recommended pump-down switch settings: 2.2 bar below nominal evaporating temperature with minimum of 1.18
***Only for index B

Electronic expansion valve

With variable capacity systems, an electronic expansion valve (EXV) is the strongly recommended solution to handle refrigerant mass flow variations. Danfoss recommends the use of ETS products. Ramp-up and ramp-down settings, of both EXV and compressor, must be done with great care.

Ramp-up of the EXV must be shorter than the ramp-up of the compressor, to avoid any low pressure operation on suction side of the compressor. The EXV can also be opened, up to a certain degree, before the start up of the compressor.

Ramp-down of the EXV must be longer than the ramp-down of the compressor, also to avoid low pressure operation (except with pump-down).

EXV should be closed, and remain closed, when the compressor is off, to avoid any liquid refrigerant entering the compressor.

Crankcase heating function

There is no crankcase heating function in CDS drives for VZH028-035-044. An external crankcase heater is required. Refer to accessory list for code numbers.

Essential piping design considerations

The working pressure in systems with R410A is about 60% higher than in systems with R22 or R407C. Consequently, all system components and piping must be designed for this higher pressure level.
Proper piping practices should be employed to ensure adequate oil return, even under minimum load conditions with special consideration given to the size and slope of the tubing coming from the evaporator. Tubing returns from the evaporator should be designed so as not to trap oil and to prevent oil and refrigerant migration back to the compressor during off-cycles.
In systems with R410A, the refrigerant mass flow will be lower compared to R22/R407C systems. To maintain acceptable pressure drops and acceptable minimum gas velocities, the refrigerant piping must be reduced in size compared to R22 / R407C systems. Take care also to not create overly high pressure drops as in R410A systems the negative impact of high pressure drops on the system efficiency is stronger than in R22/R407C systems.
The design in this guideline is for short circuit application. However, for long circuit and split system application, an oil separator and an external non-return valve are recommended for use based on system qualification status.
CDS frequency converter integrates a special feature in the compressor functions in order to improve and secure the oil recovery from the system. Refer to "Oil Return Management" section.

Piping should be designed with adequate three-dimensional flexibility. It should not be in contact with the surrounding structure, unless a proper tubing mount has been installed.
This protection proves necessary to avoid excess vibration, which can ultimately result in connection or tube failure due to fatigue or wear from abrasion. Aside from tubing and connection damage, excess vibration may also transmitted to the surrounding structure and generate an unacceptable noise level within that structure.
For more information on noise and vibration, see "Sound and Vibration Management" section.

Suction lines

If the evaporator lies above the compressor, as is often the case in split or remote condenser systems, the addition of a pump-down cycle is strongly recommended. If a pump-down cycle were to be omitted, the suction line must have a loop at the evaporator outlet to prevent refrigerant from draining into the compressor during off-cycles.
If the evaporator were situated below the compressor, the suction riser must be trapped so as to prevent liquid refrigerant from collecting at the outlet of the evaporator while the system is idle, which would mislead the expansion valve's sensor (thermal bulb) at start-up.

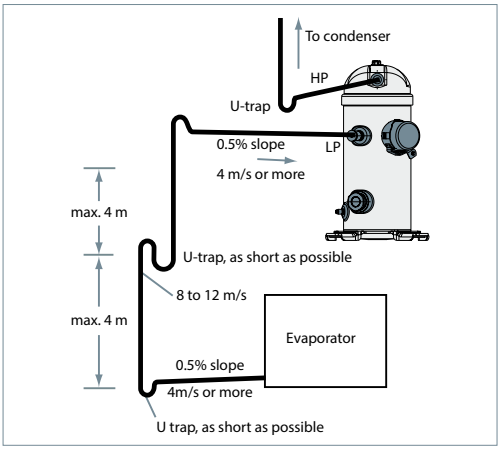

Discharge lines

When the condenser is mounted at a higher position than the compressor, a suitably sized U-shaped trap close to the compressor is necessary to prevent oil leaving the compressor from draining back to the discharge side of the compressor during off cycle. The upper loop also helps avoid condensed liquid refrigerant from draining back to the compressor when stopped.
For inverter applications with long lines we recommend the use of an oil separator even if it is only the condenser which is far away from the unit.
Piping must also be designed with care in order to make sure the remaining oil not trapped by the oil separator is properly carried over the system.
Basic principal is shown here. Note that for the discharge line, following the same principle as for the suction line with a U-trap every 4 m must be applied between discharge U-trap and upper U-trap where the condenser is above the compressor unit.
We also recommend installing one check valve on the discharge line to the condenser next to the condenser to avoid the possibility of having the discharge tube full of liquid during off cycles; discharge lines flooded by liquid which may create start-up issues by drive over-torque or HP switch trip.

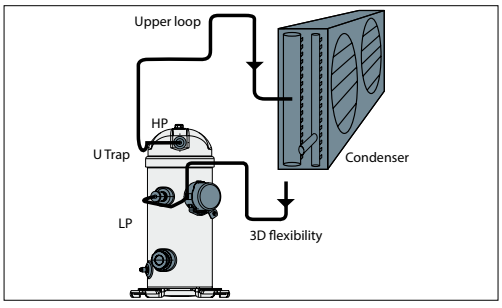

Oil management

Especially for split systems using variable speed compressor, in which every installation is unique and qualification of individual installations is not practical, Danfoss requires that OEMs install an oil separator (OS).

The requirement of an oil separator is also suitable for any other system with complex piping (long line set, U trap), multiple heat exchangers and elevation changes.

Many oil separator designs exist, the selection, requirements and recommendations of the oil Separator manufacturer should be followed.

Please note that Oil Separators are not 100% efficient and the OS efficiency will vary with different compressor running speeds. Customers should select the OS at the normal operating point at low speed.

When oil separators are installed, OEM customers need to evaluate the system performance efficiency at key rating speeds to consider the flow loss impact with the selected OS.

Danfoss recommends customers to use cyclonic oil separators. The following principles are recommended:

- OEM should select a common low speed running point to evaluate OS max efficiency.

-Qualify oil management reliability at maximum and minimum mass flow conditions in the operating envelope with the OS selected

-Evaluate system efficiency at all rating conditions to consider flow loss impact from the OS

For VZH028-035-044, the Schrader valve connection is close to the internal oil pump. To avoid reliability risks, please connect the OS to the compressor suction tube. Never return oil to the Schrader valve in order to avoid a potential negative impact on reliability, such as oil turbulence to the oil pump, etc..

For an illustration for OS connections to the compressor, please refer as below:

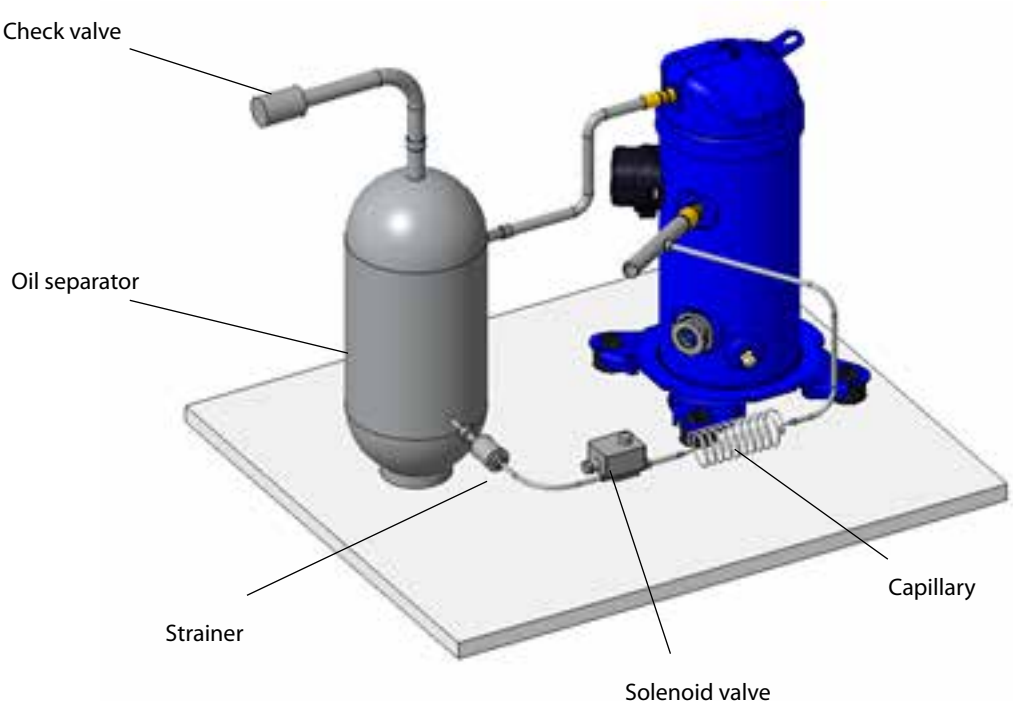

Heat exchangers

To obtain optimum efficiency of the complete refrigerant system, optimized R410A heat exchangers must be used. R410A refrigerant has good heat transfer properties: it is worthwhile designing specific heat exchangers to gain in size and efficiency.

An evaporator with an optimized R410A distributor and circuit will give correct superheat at outlet and optimal use of the exchange surface. This is critical for plate evaporators that generally have a shorter circuit and a lower volume than shell & tubes and air cooled coils.

For all evaporator types, special care is required for superheat control leaving the evaporator and oil return.

A sub-cooler circuit in the condenser that creates high sub-cooling will increase efficiency at high condensing pressure. In R410A systems the positive effect of sub-cooling on system efficiency will be significantly larger than in R22/ R407C systems.

Furthermore, for good operation of the expansion device and to maintain good efficiency in the evaporator it is important to have an adequate liquid sub-cooling. Without adequate sub-cooling, flash gas will be formed at the expansion device resulting in a high degree of vapor at the evaporator inlet leading to low efficiency.

Refrigerant charge limits

VZH compressors can tolerate liquid refrigerant up to a certain extend without major problems. However, excessive liquid refrigerant in the compressor is always unfavorable for service life. Besides, the installation cooling capacity may be reduced because of the evaporation taking place in the compressor and/or the suction line instead of the evaporator. System design must be such that the amount of liquid refrigerant in the compressor is limited. In this respect, follow the guidelines given in the section: "Essential piping design recommendations" as a priority.

If the refrigerant charge exceeds the values in table below, a suction line accumulator is strongly recommended.

Model	Refrigerant charge limit (kg)
VZH028-044	3.6

More detailed information can be found in the paragraphs hereafter. Please contact Danfoss technical support for any deviation from these guidelines.

Off-cycle migration

Liquid refrigerant can find its way into the compressor by means of off-cycle migration or liquid floodback during operation.

Off-cycle refrigerant migration is likely to occur when the compressor is located at the coldest part of the installation, when the system uses a bleed-type expansion device, or if liquid is allowed to migrate from the evaporator into the compressor sump by gravity. If too much liquid refrigerant accumulates in the sump it will saturate the oil and lead to a flooded start: when the compressor starts running again, the refrigerant evaporates abruptly under the sudden decrease of the bottom shell pressure, causing the oil to foam. In extreme situations, this might result in liquid slugging (liquid entering the scroll elements), which must be avoided as it causes irreversible damage to the compressor.

The presence of liquid in the crankcase can be easily detected by checking the sump level through the oil sight glass. Foam in the oil sump indicates a flooded start.

VZH scroll compressors can tolerate occasional flooded starts as long as the total system charge does not exceed the maximum compressor refrigerant charge limit.

Off-cycle migration can be prevented by implementing a crankcase heating or adding a pump-down cycle to the operation cycle and a liquid line solenoid valve.

	Crankcase heater / sump heater: A crankcase heater is only effective if capable of sustaining this level of temperature difference. Tests must be conducted to ensure that the appropriate oil temperature is maintained under all ambient conditions (temperature and wind).	Provide separate electrical supply for the heaters so that they remain energized even when the machine is out of service (eg. seasonal shut-down). It's recommended that the heater be turned on for a minimum of 8 hours prior to starting the compressor.
	Liquid line solenoid valve (LLSV): An LLSV may be used to isolate the liquid charge on the condenser side, thereby preventing against charge transfer or excessive migration to the compressor during off-cycles. When installed,	EXV also ensures this function. The quantity of refrigerant on the low-pressure side of the system can be further reduced by using a pump-down cycle in association with the LLSV.
	Pump-down cycle: A pump-down cycle represents one of the most effective ways to protect against the off-cycle migration of liquid refrigerant. Once the system has reached its set point and is about to shut off, the LLSV on the condenser outlet closes. The compressor then pumps the majority of the refrigerant charge into the condenser and receiver before the system stops on the low pressure pump-down switch. This step reduces the amount of charge on the	low side in order to prevent off-cycle migration. The recommended low-pressure pump-down switch setting is 1.5 bar below the nominal evaporating pressure. It shall not be set lower than 2.3 bar. An external non return valve is recommended to avoid liquid flood back from the high-pressure side.
	Liquid receiver: Refrigerant charge optimization varies with compressor speed. To avoid flash gas at low speed, a receiver may be necessary. Receiver dimensioning requires special attention.	The receiver shall be large enough to contain part of the system refrigerant charge, but shall not be too large, to avoid refrigerant overcharging during maintenance operations.
Liquid floodback during operation	Danfoss recommends the use of an electronic expansion valve for all air conditioning applications with VZH028-044 compressors. An EXV has two key benefits: it provides modulating control of the system under varying load	conditions, and it protects the compressors from flood back during adverse running conditions. Exceptions to the use of EXV's with Danfoss variable speed compressors must be approved by Danfoss application engineering.

Manage superheat

During normal operation, refrigerant enters the compressor as a superheated vapor. Liquid flood back occurs when a part of the refrigerant entering the compressor is still in liquid state.

Liquid flood back can cause oil dilution and, in extreme situations lead to liquid slugging that can damage compression parts.

Requirement

In steady state conditions the expansion device must ensure a suction superheat within 5K to 30K (9 to 54°F).

System evaluation

Use the table in relation with the application to quickly evaluate the potential tests to perform.

Application	Tests to perform
Non reversible	Liquid flood back test
Reversible	Liquid flood back test Defrost test

Test, criteria and solutions

Test N°	Purpose	Test condition	Pass criteria	Solutions
Liquid flood back test	Steady-state	Liquid flood back testing must be carried out under expansion valve threshold operating conditions: •Lowest foreseeable evaporation, and highest foreseeable condensation. •Minimum speed running. For reversible system, perform test in both heating and cooling mode	Suction superheat >5K	1. Check expansion valve selection and setting. -For Thermostatic expansion valve (TXV) check bulb position... -For Electronic expansion valve (EXV) check measurement chain and PID.... 2. Add a suction accumulator*.
	Transient	Tests must be carried out with most unfavorable conditions : • fan staging, • compressor staging • …	Oil superheat shall not be more than 30 sec below the safe limit defined in the Dilution Chart. (see graph above)	
Defrost test	Check liquid floodback during defrost cycle	Defrost test must be carried out in the most unfavorable condition at 0°C (32°F) evaporating temperature).	Oil superheat shall not be more than 30 sec below the safe limit defined in the Dilution Chart. (see graph ablve)	1.Check defrost logic. In reversible systems, the defrost logic can be worked out to limit liquid floodback effect. (for more details see “Control Logic”). 2. Add a suction accumulator*.

*Suction accumulator offers protection by trapping the liquid refrigerant upstream from the compressor. The accumulator should be sized at least 50 % of the total system charge. Suction accumulator dimensions can impact oil return (gas velocity, oil return hole size…), therefore oil return has to be checked according to section “Manage oil in the circuit”.

Dilution chart
(reference at 20°C / 68°F ambient temperature)

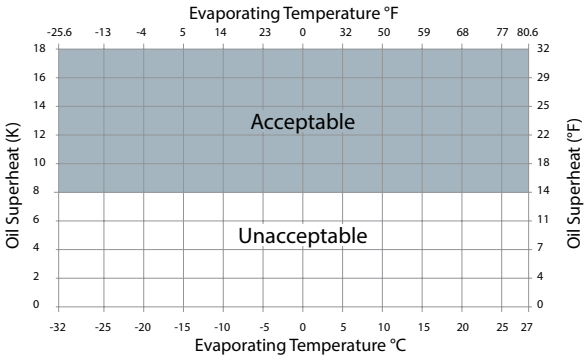

Oil temperature sensor must be placed between oil sight glass and compressor baseplate. Some thermal paste shall be used to improve the conductivity. The sensor must also be correctly thermally insulated from the ambiance.

The Oil superheat is defined as:
(Oil temperature - Evaporating temperature)

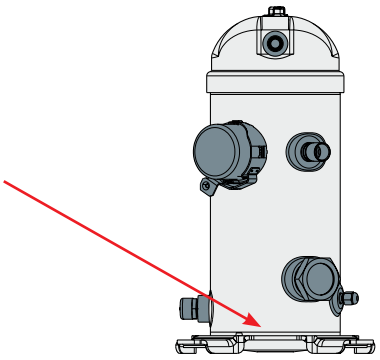

Low ambient compressor operations

Low ambient start-up	Under cold ambient conditions, upon start-up the pressure in the condenser may be so low that a sufficient pressure differential across the expansion device cannot be developed to properly feed the evaporator. As a result, the compressor may go into abnormal low suction pressure, which can lead to compressor failure. Under no circumstances should the compressor be allowed to operate under vacuum. The low-pressure control must be set in accordance with	the table section "Pressure settings" in order to prevent this from happening. Low pressure differentials can also cause the expansion device to "hunt" erratically, which might cause surging conditions within the evaporator, with liquid spillover into the compressor. This effect is most pronounced during low load conditions, which frequently occur during low ambient conditions.
Head pressure control under low ambient conditions	Several possible solutions are available to prevent the compressor from drawing down to a vacuum upon start-up under low ambient conditions. In air-cooled machines, cycling the fans with a head pressure controller will ensure that the fans remain off until the condensing pressure has reached a satisfactory level. In water-cooled units, the same can be performed using a water regulator valve that is also operated by head pressure, thereby ensuring that the water valve does not open until the condensing pressure reaches a satisfactory level. Note: The minimum condensing pressure must be set at the minimum saturated condensing temperature shown in the application envelopes.	Under very low ambient conditions, in which testing has revealed that the above procedures might not ensure satisfactory condensing and suction pressures, the use of a liquid receiver with condenser and receiver pressure regulators would be possible. Condensing pressure control is also strongly recommended to improve any system efficiency. The most accurate value is to control the condensing temperature at 12 K above the ambient temperature for air cooled condensers. For further information, please contact Danfoss Technical support.
Crankcase heaters	A crankcase heating will minimize refrigerant migration caused by the large temperature gradient between the compressor and the remainder of the system.	Belt type crankcase heaters can be used, see section "Accessory". They can be connected to CDS relay 1 or 2.
Low load operations	It is recommended that the unit is tested and monitored at minimum load and, if possible, during low ambient conditions as well. During conditions of low load on the system, the following considerations should be taken into account to ensure proper system operating characteristics.	• The superheat setting of the expansion device should be sufficient to ensure proper superheat levels during low loading periods. 6 K stable superheat is required. In addition, the refrigerant charge should be sufficient to ensure proper sub-cooling within the condenser so as to avoid the risk of flashing in the liquid line before the expansion device. The expansion device should be sized to ensure proper control of the refrigerant flow into the evaporator.

	An oversized valve may result in erratic control. This can lead to liquid refrigerant entering the compressor if the expansion valve does not provide stable refrigerant super-heat control under varying loads. • Condenser fans should be cycled in such a way that the minimum pressure differential is maintained between the suction and discharge pressures. Inverter fans can also be used to control the amount of heat to be removed from the condenser.	• The compressors should be run for a minimum period in order to ensure that the oil has sufficient time to properly return to the compressor sump and that the motor has sufficient time to cool under conditions of lowest refrigerant mass flows. Refer to section "Oil return management function".
Brazed plate heat exchangers	A brazed plate heat exchanger needs very little internal volume to satisfy the set of heat transfer requirements. Consequently, the heat exchanger offers very little internal volume for the compressor to draw vapor from on the suction side. The compressor can then quickly enter into a vacuum condition. It is therefore important that the expansion device be sized correctly and that a sufficient pressure differential across the expansion device be available to ensure adequate refrigerant feed into the evaporator. This aspect is of special concern when operating the unit under low ambient and load conditions. For further information on these conditions, please refer to the previous sections. Due to the small volume of the brazed plate heat exchanger, no pump-down cycle is normally required.	The suction line running from the heat exchanger to the compressor must be trapped to avoid refrigerant migration to the compressor. When using a brazed plate condenser heat exchanger, a sufficient free volume for the discharge gas to accumulate is required in order to avoid excess pressure build-up. At least 1 meter of discharge line is necessary to generate this volume. To help reduce the gas volume immediately after start-up even further, the supply of cooling water to the heat exchanger may be opened before the compressor starts up so as to remove superheat and condense the incoming discharge gas more quickly. Because of the large compressor capacity variation and VZH capability to run at low condensing temperature an EXV (electronic expansion valve) is mandatory.
Reversible heat pump systems	Transients are likely to occur in reversible heat pump systems, i.e. a changeover cycle from cooling to heating, defrost or low-load short cycles. These transient modes of operation may lead to liquid refrigerant carry-over (or flood-back) or excessively wet refrigerant return conditions. As such, reversible cycle applications require specific precautions in order to ensure a long compressor life and satisfactory operational function. Compressors need to run at least	1 minute at 50 rps each time after reverse. Regardless of the refrigerant charge in the system, specific tests for repetitive flood-back are required to confirm whether or not a suction accumulator needs to be installed. The following considerations cover the most important issues when dealing with common applications. Each application design however should be thoroughly tested to ensure acceptable operating characteristics.
Discharge temperature monitoring	Heat pumps frequently utilize high condensing temperatures in order to achieve a sufficient temperature rise in the medium being heated. At the same time, they often require low evaporating pressures to obtain sufficient temperature differentials between the evaporator and the outside temperature. This situation may result in high discharge temperature; as such, it is mandatory that a discharge gas safety control is included to protect the compressor	from excessive temperatures. Operating the compressor at too high discharge temperatures can result in mechanical damage to the compressor as well as thermal degradation of the compressor lubricating oil and a lack of sufficient lubrication. Refer to the "Discharge gas thermostat" section for frequency converter settings and accessories availability.

Discharge line and reversing valve	The VZH scroll compressor is a high volumetric machine and, as such, can rapidly build up pressure in the discharge line if gas in the line becomes obstructed even for a very short period of time which situation may occur with slow-acting, reversing valves in heat pumps. Discharge pressures exceeding the operating envelope may result in nuisance high-pressure switch cutouts and can generate excessive load on bearings and motor. To prevent such occurrences, it is important that a 1-meter minimum discharge line length be allowed between the compressor discharge port and the reversing valve or any other restriction. This gives sufficient free volume for the discharge	gas to collect and to reduce the pressure peak during the time it takes for the valve to change position. At the same time, it is important that the selection and sizing of the reversing or 4-way valve ensure that the valve switches quickly enough to prevent against too high discharge pressure and nuisance high-pressure cutouts. Check with the valve manufacturer for optimal sizing and recommended mounting positions. It is strongly recommended to reduce the compressor speed to 25/30 rps before the 4-way valve is moved from a position to another. Refer also to high and low pressure protection.
Defrost and reverse cycle	After the 4-way valve is moved to defrost position, and in order to shorten the defrost period, the compressor speed can be maintained at 70 rps or higher speed during the defrost period.	When the compressor is started again each time, compressor will run at 50 rps for at least 1 minute. Thus to avoid excessive liquid refrigerant to come back to the compressor sump.
Suction line accumulator	The use of a suction line accumulator is strongly recommended in reversible-cycle applications. This because of the possibility of a substantial quantity of liquid refrigerant remaining in the evaporator, which acts as a condenser during the heating cycle. This liquid refrigerant can then return to the compressor, either flooding the sump with refrigerant or as a dynamic liquid slug when	the cycle switches back to a defrost cycle or to normal cooling operations. Sustained and repeated liquid slugging and floodback can seriously impair the oil's ability to lubricate the compressor bearings. This situation can be observed in wet climates where it is necessary to frequently defrost the outdoor coil in an air source heat pump. In such cases a suction accumulator becomes mandatory.
Water utilizing systems	Apart from residual moisture in the system after commissioning, water could also enter the refrigeration circuit during operation. Water in the system should always be avoided. Not only because it can quickly lead to electrical failure, sludge in sump and corrosion but in particular because it can cause serious safety risks. Common causes for water leaks are corrosion and freezing.	**Corrosion**: Materials in the system shall be safe to use with water and protected against corrosion. **Freezing**: When water freezes into ice its volume expands which can damage heat exchanger walls and cause leaks. During off periods water inside heat exchangers could start freezing when ambient temperature is lower than 0°C. During on periods ice banking could occur when the circuit is running continuously at too low load. Both situations should be avoided by connecting a pressure and thermostat switch in the safety line.

Running sound level

For all VZH models, noise level given in table does not include bottom hood attenuation.

Model	Frequency RPS	200 V		400 V		575 V	
		Without accoustic hood (dBA)	With accoustic hood (dBA)	Without accoustic hood (dBA)	With accoustic hood (dBA)	Without accoustic hood (dBA)	With accoustic hood (dBA)
VZH028-044	60	77	70	77	70	77	70
	100	86	79	86	79	86	79

Average sound power for reference at ARI A/C conditions measured in free space.
Please notice below two phenomenon is also normal for variable speed compressor:
1. At light load and low speed condition the compressor may produce certain discharge pulsation.
2. In some situations when the compressor stops working, there may still be some noise which lasts around 2 seconds. The electromagnetic noise is caused by drive anti-reverse protection.

Sound generation in a refrigeration or air conditioning system

Typical sound and vibration in refrigeration and air conditioning systems encountered by design and service engineers may be broken down into the following three source categories.
Sound radiation: This generally takes an airborne path.
Mechanical vibrations: These generally extend along the parts of the unit and structure.
Gas pulsation: This tends to travel through the cooling medium, i.e. the refrigerant.

The following sections focus on the causes and methods of mitigation for each of the above sources.

Compressor sound radiation

For sound radiating from the compressor, the emission path is airborne and the sound waves travel directly from the machine in all directions.

The VZH scroll compressor is designed to be quiet and the frequency of the sound generated is pushed into the higher ranges, which not only are easier to reduce but also do not generate the penetrating power of lower-frequency sound.

Use of sound-insulation materials on the inside of unit panels is an effective means of substantially reducing the sound being transmitted to the outside. Ensure that no components capable of transmitting sound/vibration within the unit come into direct contact with any non insulated parts on the walls of the unit.

Because of the VZH unique design of a full-suction gas-cooled motor, compressor body insulation across its entire operating range is possible. Acoustic hoods are available from Danfoss as accessories. These hoods are quick and easy to install and do not increase the overall size of the compressors to a great extent.

Mechanical vibrations

Vibration isolation constitutes the primary method for controlling structural vibration. VZH scroll compressors are designed to produce minimal vibration during operations. The use of rubber isolators on the compressor base plate or on the frame of a manifolded unit is very effective in reducing vibration being transmitted from the compressor(s) to the unit. Once the supplied rubber grommets have been properly mounted, vibrations transmitted from the compressor base plate to the unit are held to a strict minimum. In addition, it is extremely important that the frame supporting the mounted compressor be of sufficient mass and stiffness to help dampen any residual vibration potentially transmitted to the frame.

For further information on mounting requirements, please refer to the section on mounting assembly.

Speed by-pass

If vibrations occurs at some typical frequencies of the VZH variable speed compressor system, design must be checked: frame, piping, pipes using cushioned clamps. But if some frequencies continue to produce unacceptable vibration levels, speed by-pass is adjustable in the frequency converter, in order to avoid some frequency ranges. Four by-pass ranges are adjustable, and settings can be made in parameter group 4-6.

Gas pulsation

The VZH scroll compressor has been designed and tested to ensure that gas pulsation has been optimized for the most commonly encountered air conditioning pressure ratios. On heat pump installations and other installations where the pressure ratio lies beyond the typical range, testing should be conducted under all expected conditions and operating configurations to ensure that minimum gas pulsation is present. If an unacceptable level is identified, a discharge muffler with the appropriate resonant volume and mass should be installed. This information can be obtained from the component manufacturer.

Each compressor is shipped with printed instructions for installation. These instructions can also be downloaded from:

http://instructions.cc.danfoss.com

Compressor handling

Each VZH scroll compressor is equipped with one lift ring on the top shell. Always use the ring when lifting the compressor. Use lifting equipment rated and certified for the weight of the compressor. A spreader bar rated for the weight of the compressor is highly recommended to ensure a better load distribution. The use of lifting hooks closed with a clasp certified to lift the weight of the compressor is also highly recommended. Always respect the appropriate rules concerning lifting objects of the type and weight of these compressors. Maintain the compressor in an upright position during all handling operations.

When the compressor is mounted as part of an installation, never use the lift rings on the compressor to lift the installation. The risk is that the lugs could separate from the compressor or that the compressor could separate from the base frame with extensive damage and possible personal injury as a result.

Never apply force to the terminal box with the intention of moving the compressor, as the force placed upon the terminal box can cause extensive damage to both the box and the components contained inside.

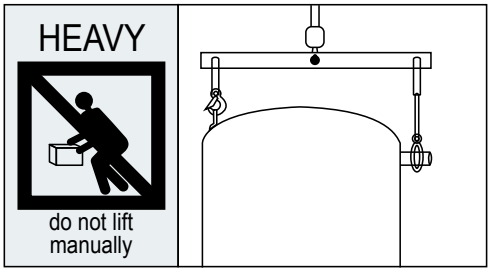

Mounting

Maximum inclination from the vertical plane, while operating must not exceed 7 degrees. All compressors are delivered with four rubber grommets and metal sleeves. Compressors must always be mounted with these grommets. Recommended torque for mounting bolts: 11 Nm (±1 Nm).

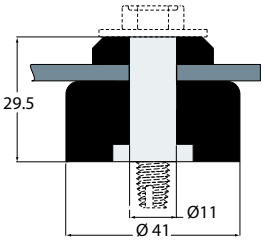

Recommended torque for mounting bolts: 11 Nm (±1 Nm)

Removing connections shipping plugs

Before the suction and discharge plugs are removed, the nitrogen holding charge must be released via the suction schrader valve to avoid an oil mist blowout. Remove the suction plug first and the discharge plug afterwards. The plugs should be removed only just before connecting the compressor to the installation in order to avoid moisture from entering the compressor. When the plugs are removed, it is essential to keep the compressor in an upright position so as to avoid oil spillage.

System cleanliness

The refrigerant compression system, regardless of the type of compressor used, will only provide high efficiency and good reliability, along with a long operating life, if the system contains solely the refrigerant and oil it was designed for. Any other substances within the system will not improve performance and, in most cases, will be highly detrimental to a system's operation. The presence of non-condensable substances and system contaminants such as metal shavings, solder and flux, have a negative impact on compressor service life. Many of these contaminants are small enough to pass through a mesh screen and can cause considerable damage within a bearing assembly.

The use of highly hygroscopic polyolester oil in R410A compressors requires that the oil be exposed to the atmosphere as little as possible. System contamination is one of main factors affecting equipment reliability and compressor service life. It is important therefore to take system cleanliness into account when assembling a refrigeration system. During the manufacturing process, circuit contamination may be caused by:

- Brazing and welding oxides,
- Filings and particles from the removal of burrs in pipe-work,
- Brazing flux,
- Moisture and air.

Consequently, when building equipment and assemblies, the precautions listed in the following paragraphs must be taken.

Tubing

Only use clean and dehydrated refrigeration grade copper tubing. Tube-cutting must be carried out so as not to deform the tubing roundness and to ensure that no foreign debris remains within the tubing. Only refrigerant grade fittings should be used and these must be of both a design and size to allow for a minimum pressure drop through the completed assembly. Follow the brazing instructions bellow. Never drill holes into parts of the pipe-work where filings and particles can not be removed.

Filter driers

For new installations with VZH compressors with polyolester oil, Danfoss recommends using the Danfoss DML 100% molecular sieve, solid core filter drier. Molecular sieve filter driers with loose beads from third party suppliers shall be avoided. For servicing of existing installations where acid formation is present the Danfoss DCL solid core filter driers containing activated alumina are recommended. The drier is to be oversized rather than undersized. When selecting a drier, always take into account its capacity (water content capacity), the system refrigeration capacity and the system refrigerant charge.

Brazing and soldering

Copper to copper connections

When brazing copper-to-copper connections, the use of copper/phosphorus brazing alloy containing 5% silver or higher with a melting temperature of below 800°C is recommended. No flux is required during brazing.

Dissimilar metals connections

When manipulating dissimilar metals such as copper and brass or steel, the use of silver solder and anti-oxidant flux is required.

Compressor connection

When brazing the compressor fittings, do not overheat the compressor shell, which could severely damage certain internal components due to excessive heating. Use of a heat shield and/or a heat-absorbent compound is highly recommended. Due to the relatively sizable tubing and fitting diameters a double-tipped torch using acetylene is recommended for brazing operation on VZH compressors.

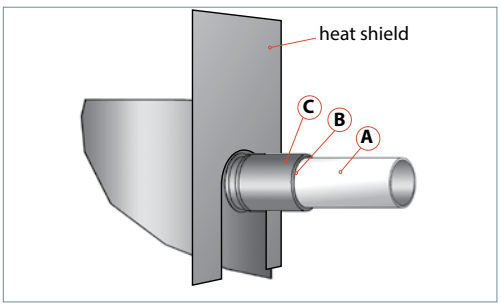

For brazing the suction and discharge connections, the following procedure is advised:

- Make sure that no electrical wiring is connected to the compressor.
- Protect painted surfaces on the terminal box and compressor from torch heat damage (see diagram).
- Remove the Teflon gaskets when brazing rotolock connectors with solder sleeves.
- Use only clean, refrigeration-grade copper tubing and clean all connections.
- Use brazing material with a minimum of 5% silver content.
- Purge nitrogen or CO_2 through the compressor in order to prevent against oxidation and flammable conditions. The compressor should not be exposed to the open air for extended periods.
- Use of a double-tipped torch is recommended.
- Apply heat evenly to area A until the brazing temperature is reached. Move the torch to area B and apply heat evenly until the brazing temperature has been reached there as well, and then begin adding the brazing material. Move the torch evenly around the joint, in applying only enough brazing material to flow the full circumference of the joint.
- Move the torch to area C only long enough to draw the brazing material into the joint, but not into the compressor.
- Remove all remaining flux "once the joint has been soldered" with a wire brush or a wet cloth. Remaining flux would cause corrosion of the tubing.

Ensure that no flux is allowed to enter into the tubing or compressor. Flux is acidic and can cause substantial damage to the internal parts of the system and compressor.

The polyolester oil used in VZH compressors is highly hygroscopic and will rapidly absorb moisture from the air. The compressor must therefore not be left open to the atmosphere for a long period of time. The compressor fitting plugs shall be removed just before brazing the compressor. The compressor should always be the last component brazed into the system

Before eventual unbrazing the compressor or any system component, the refrigerant charge must be removed from both the high- and low-pressure sides. Failure to do so may result in serious personal injury. Pressure gauges must be used to ensure all pressures are at atmospheric level.

For more detailed information on the appropriate materials required for brazing or soldering, please contact the product manufacturer or distributor. For specific applications not covered herein, please contact Danfoss for further information.

High voltage test

Carry out a high voltage test by short-circuiting terminals U, V, W, L1, L2 and L3. Energize by max. 1920 V DC for code G compressors and 1460 V DC for code J compressors for one second between this short-circuit and the chassis. When running high voltage tests of the entire installation, frequency converter and compressor electrical motor compressor test can be conducted together. When conducting a high voltage test make sure the system is not under vacuum: this may cause electrical motor compressor failure. Please note, it is note recommended that a high-voltage test be carried out too often as it may damage the motor.

System pressure test

Always use an inert gas such as nitrogen for pressure testing. Never use other gases such as oxygen, dry air or acetylene as these may form an inflammable mixture. Do not exceed the following pressures:

Maximum compressor test pressure (Low side)	30 bar
Maximum compressor test pressure (High side)	41.1 bar
Maximum pressure difference between high side and low side of the compressor	36 bar

Pressurize the system on HP side first then LP side to prevent rotation of the scroll. Never let the pressure on LP side exceed the pressure on HP side with more than 5 bar.

Leak detection

Leak detection must be carried out using a mixture of nitrogen and refrigerant or nitrogen and helium, as indicated in the table below. Never use other gasses such as oxygen, dry air or acetylene as these may form an inflammable mixture.

Pressurize the system on HP side first then LP side.

Leak detection with refrigerant	Leak detection with a mass spectrometer
Nitrogen & R410A	Nitrogen & Helium

Vacuum pump down and moisture removal

Moisture obstructs the proper functioning of both the compressor and the refrigeration system. Air and moisture reduce service life and increase condensation pressure, which causes abnormally high discharge temperatures that are then capable of degrading the lubricating properties of the oil. The risk of acid formation is also increased by air and moisture, and this condition can also lead to copper plating. All these phenomena may cause both mechanical and electrical compressor failures. The typical method for avoiding such problems is a vacuum pump-down executed with a vacuum pump, thus creating a minimum vacuum of 500 microns (0.67 mbar). Please refer to News bulletin TI1-026-0302 "Vacuum pump down and dehydration procedure".

Refrigerant charging

For the initial charge, the compressor must not run and eventual service valves must be closed. Charge refrigerant as close as possible to the nominal system charge before starting the compressor. This initial charging operation must be done in liquid phase as far away as possible from the compressor. The best location is on the liquid line between the condenser outlet and the filter drier. Then during commissioning, when needed, a complement of charge can be done in liquid phase: slowly throttling liquid in on the low pressure side as far away as possible from the compressor suction connection. The refrigerant charge quantity must be suitable for both summer and winter operations.

Refer to news bulletin FRCC.EN.050 "Danfoss Commercial Compressors recommended refrigerant system charging practice" for more details.

Commissioning

The system must be monitored after initial startup for a minimum of 60 minutes to ensure proper operating characteristics such as:

- Proper metering device operation and desired superheat readings
- Suction and discharge pressure are within acceptable levels
- Correct oil level in compressor sump indicating proper oil return
- Low foaming in sight glass and compressor sump temperature 10K above saturation temperature to show that there is no refrigerant migration taking place
- Acceptable cycling rate of compressors, including duration of run times.

A short cycling protection is provided in the CDS frequency converter. It is factory preset "enabled" with the following parameters in:
28.01 - interval between 2 starts: 300 secondes
28.02 - minimum run time: 60 seconds.

This minimum run time is set to guaranty long enough running time at start up in order to create enough refrigerant flow velocity in the system to recover the oil to the compressor sump.

- Current draw of compressor within acceptable values (RLA ratings)
- No abnormal vibrations and noise.

⚠ **Note this compressor is equipped with a four-pole electrical motor so the applied frequency from the inverter will be 30 Hz for 15 rps(900 rpm) up to 200 Hz for 100 rps (6000 rpm).**

Oil level checking and top-up

In installations with good oil return and line runs up to 15 m, no additional oil is required. If installation lines exceed 15 m, additional oil may be needed. 1 or 2% of the total system refrigerant charge (in kg) can be used to roughly define the required oil top-up quantity (in liters) but in any case the oil charge has to be adjusted based on the oil level in the compressor sight glass.

When the compressor is running under stabilized conditions, the oil level must be visible in the sight glass.

The presence of foam filling in the sight glass indicates large concentration of refrigerant in the oil and / or presence of liquid returning to the compressor.

The oil level can also be checked a few minutes after the compressor stops, the level must be between ¼ and ¾ of sight glass.

When the compressor is off, the level in the sight glass can be influenced by the presence of refrigerant in the oil.

VZH028-035-044 are factory charged with PVE32(160HV), when topping up the compressor, customer could also use PVE68(320HV) lubricant. Danfoss supply PVE68 as accessory.

There will be no reliability risks even VZH is with 100% PVE68, but the mixture of PVE32 and PVE68 will cause performance drop.

Top-up the oil while the compressor is idle. Use the schrader connector or any other accessible connector on the compressor suction line and a suitable pump. See news bulletin "Lubricants filling in instructions for Danfoss Commercial Compressors."

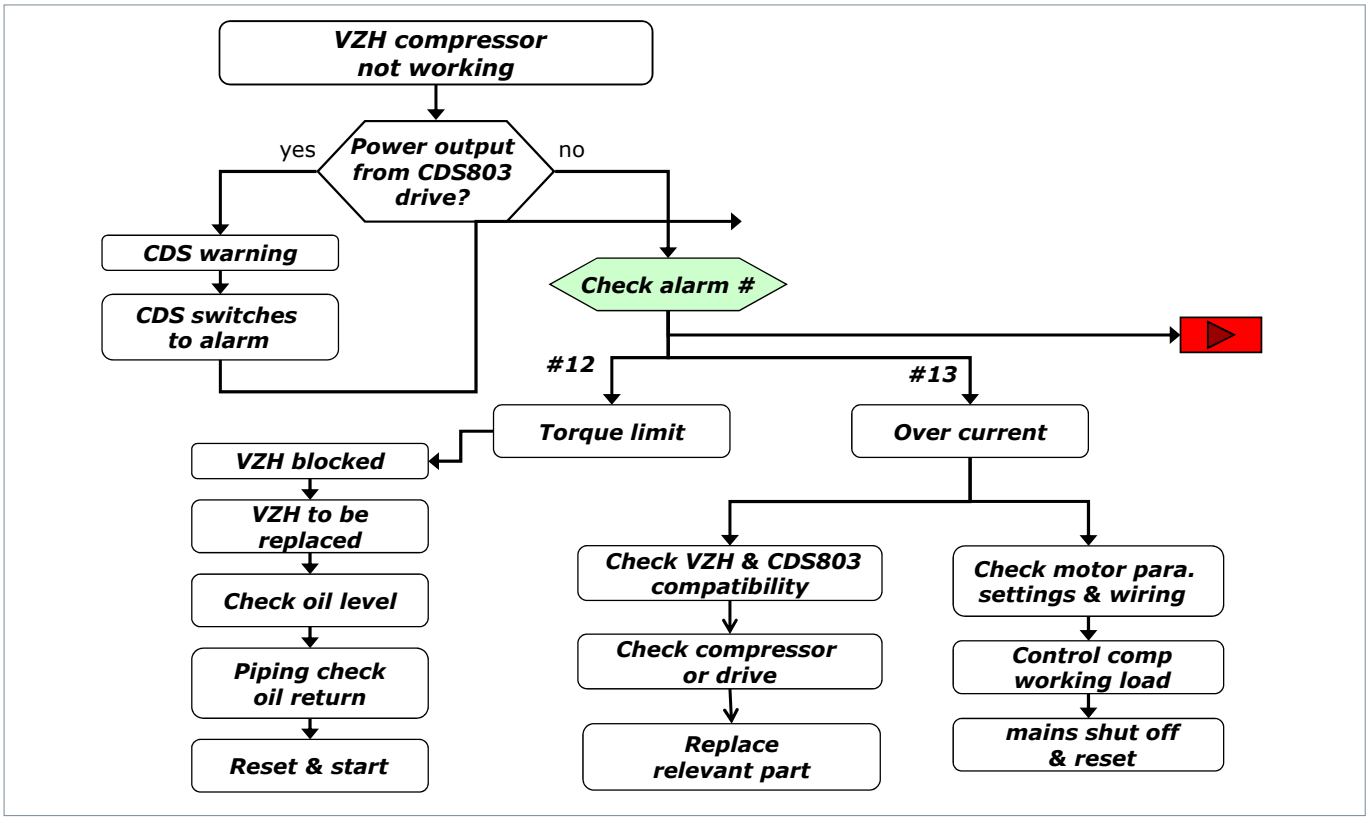
VZH compressor not working
Power output from CDS803 drive?
yes
no
CDS warning
CDS switches to alarm
Check alarm #
#12
#13
Torque limit
Over current
VZH blocked
VZH to be replaced
Check oil level
Piping check oil return
Reset & start
Check VZH & CDS803 compatibility
Check compressor or drive
Replace relevant part
Check motor para. settings & wiring
Control comp working load
mains shut off & reset

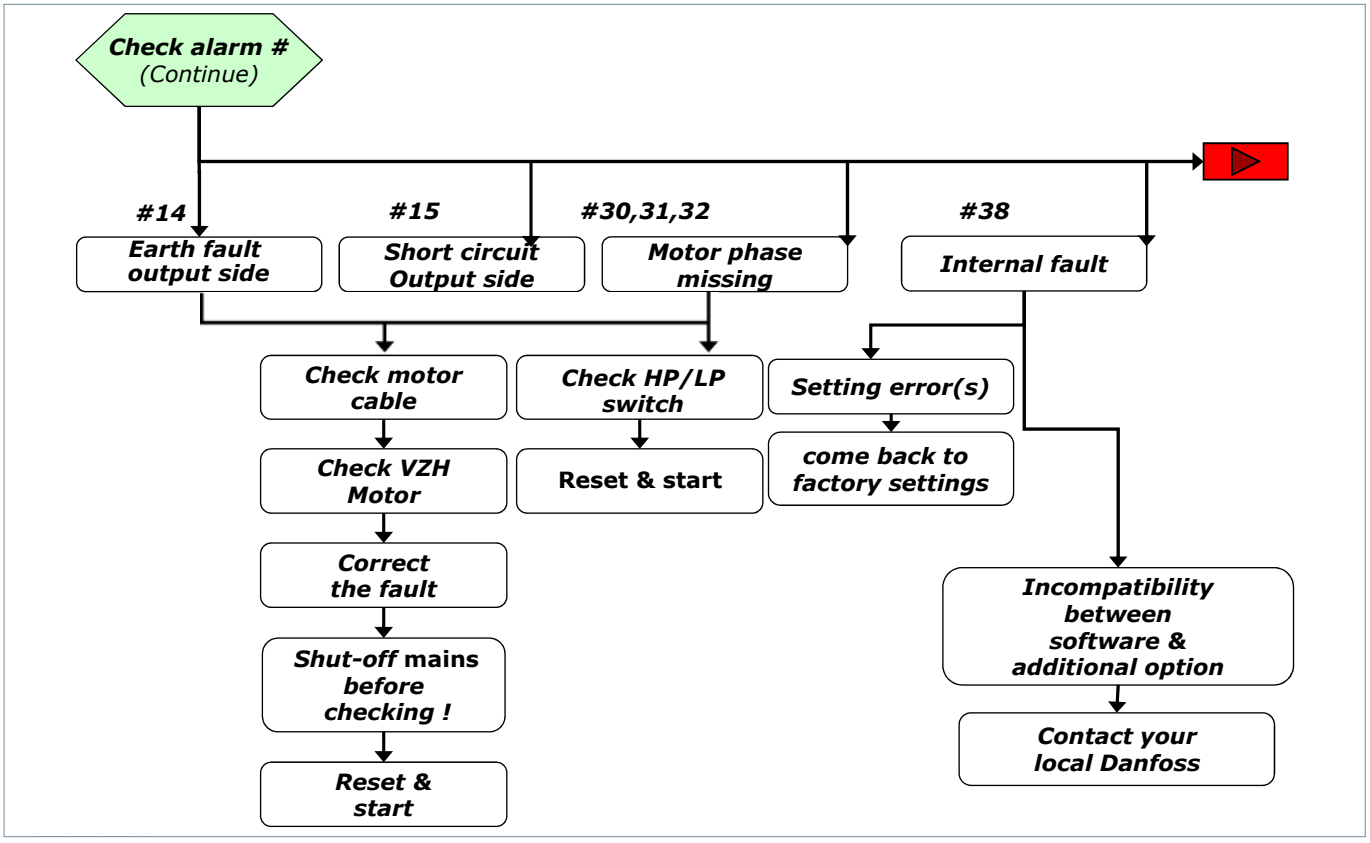
Check alarm # (Continue)
#14
#15
#30,31,32
#38
Earth fault output side
Short circuit Output side
Motor phase missing
Internal fault
Check motor cable
Check HP/LP switch
Setting error(s)
Check VZH Motor
Reset & start
come back to factory settings
Correct the fault
Shut-off mains before checking !
Reset & start
Incompatibility between software & additional option
Contact your local Danfoss

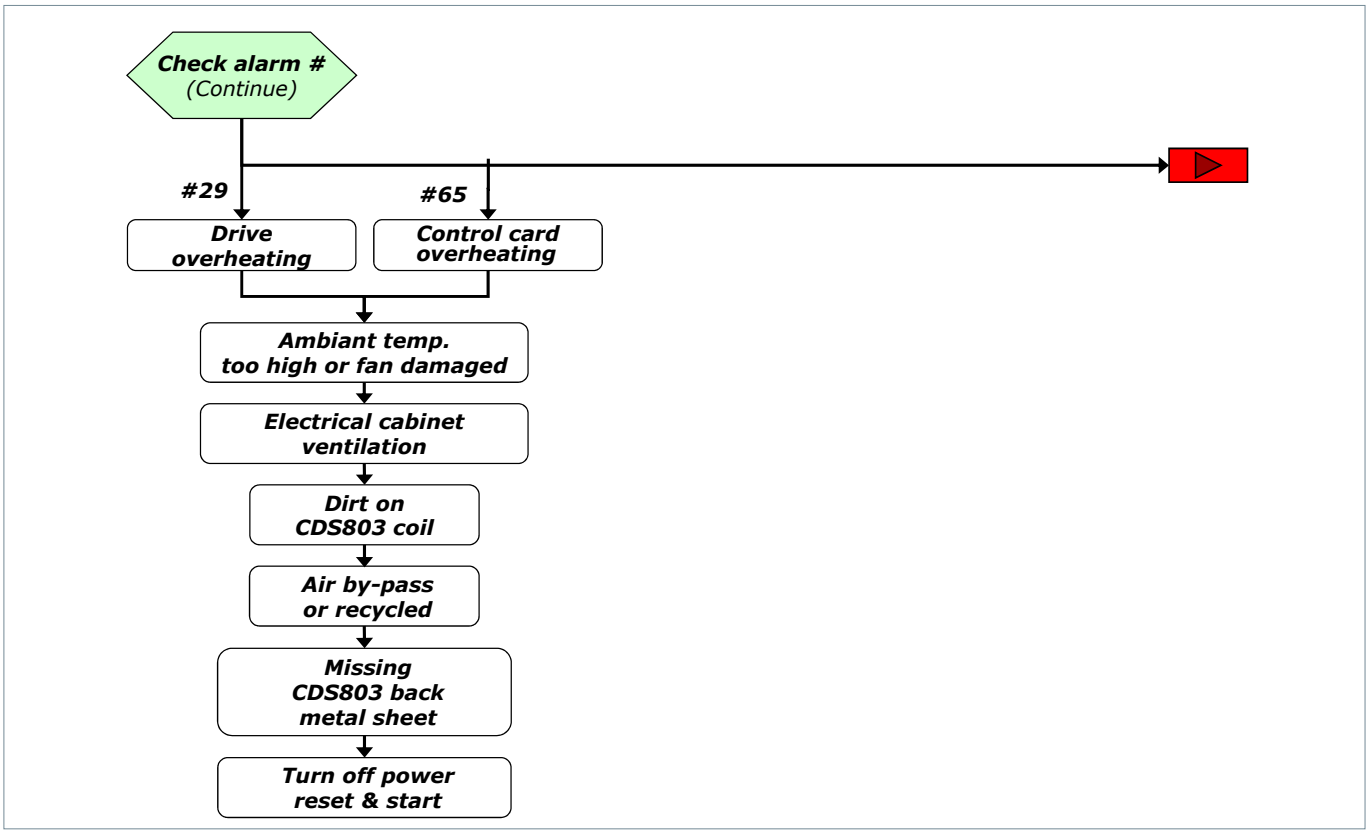
Check alarm #
(Continue)
#29
#65
Drive overheating
Control card overheating
Ambiant temp. too high or fan damaged
Electrical cabinet ventilation
Dirt on CDS803 coil
Air by-pass or recycled
Missing CDS803 back metal sheet
Turn off power reset & start

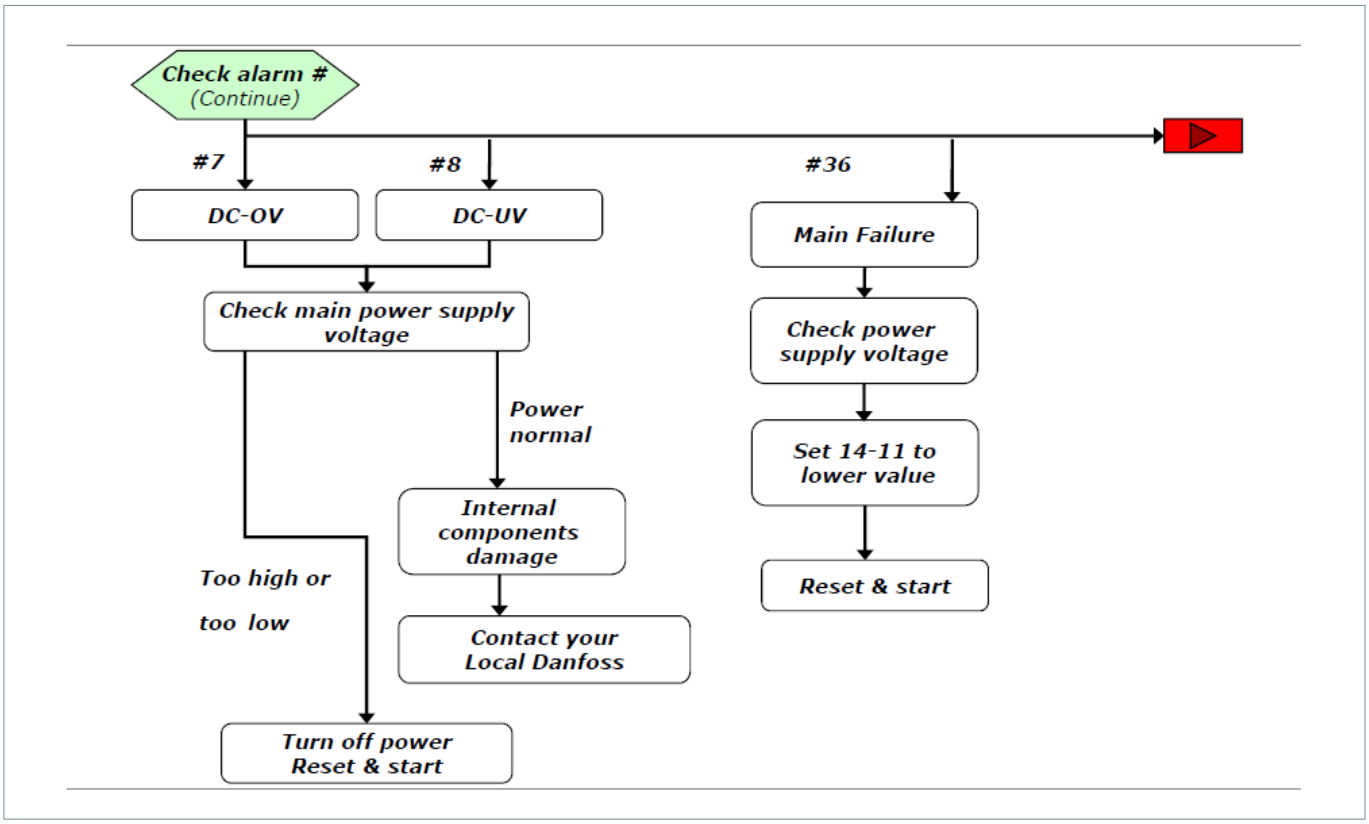
Check alarm #
(Continue)
#7
#8
#36
DC-OV
DC-UV
Main Failure
Check main power supply voltage
Check power supply voltage
Power normal
Set 14-11 to lower value
Internal components damage
Too high or too low
Reset & start
Contact your Local Danfoss
Turn off power Reset & start

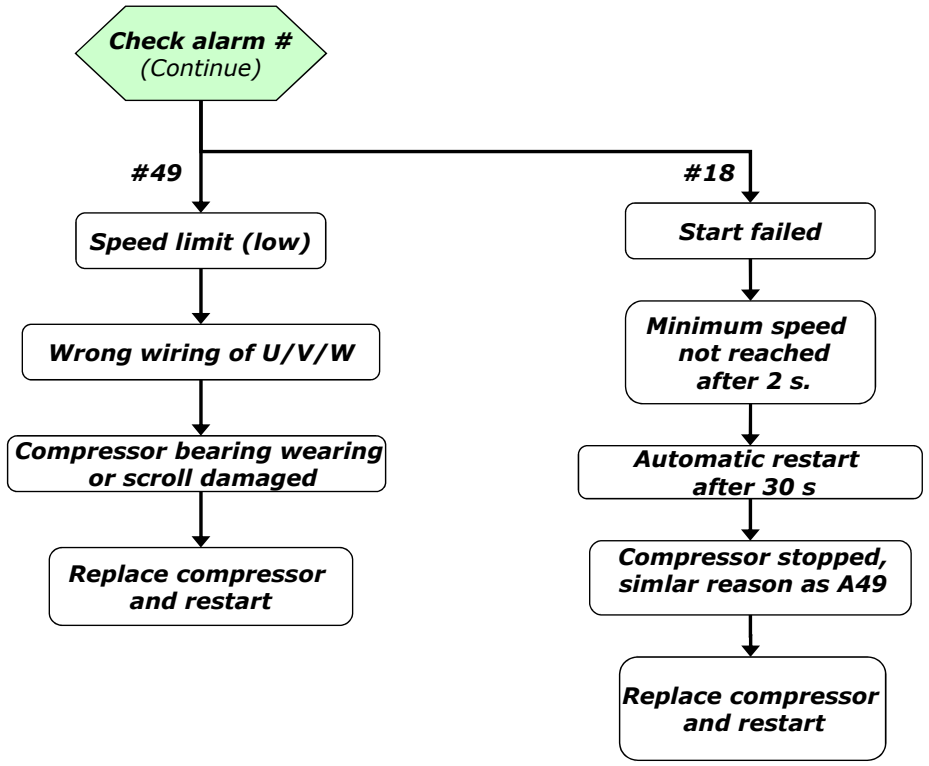
Check alarm #
(Continue)
#49
Speed limit (low)
Wrong wiring of U/V/W
Compressor bearing wearing or scroll damaged
Replace compressor and restart
#18
Start failed
Minimum speed not reached after 2 s.
Automatic restart after 30 s
Compressor stopped, simlar reason as A49
Replace compressor and restart

Kit ordering and shipping

The tables on the following pages give code numbers for ordering purposes for the VZH compressor and CDS frequency converter kit packed and shipped separately.

Packaging

Compressor single pack

Compressor model	Height (mm)	Width (mm)	Depth (mm)	Weight (kg)
VZH028/035/044	464	292	286	30

Compressor Industrial pack

Compressors are not packed individually but are shipped all together on one pallet. They can be ordered in quantities of full pallets only, multiples of 12 compressors, according below table.

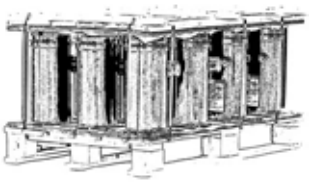

Compressor model	Nbr*	Length (mm)	Width (mm)	Height (mm)	Gross Weight (kg)	Static stacking pallets
VZH028	12	1170	815	625	430	3
VZH035	12	1170	815	625	450	3
VZH044	12	1170	815	625	450	3

Frequency converter single pack

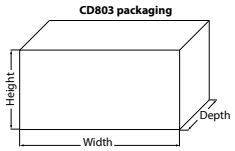

Drive supply voltage	Compressor	Drive enclosure	IP20			
			Height (mm)	Width (mm)	Depth (mm)	Weight (kg)
T2: Code J	VZH028/035	H4	380	250	375	7.9
	VZH044	H5	420	290	375	9.5
T4: Code G	VZH028/035	H3	255	100	206	4.5
	VZH044	H4	380	250	375	7.9
T6: Code H	VZH028	A3	390	196	301	6.6
	VZH035/044	B3	349	500	330	13

Ordering information

VZH scroll compressors can be ordered in single packs and industrial packs. Drive can be ordered in single packs. Please use the code numbers from below tables for ordering.

Compressors single pack

Compressor model	Equipment version	G 380-480V/3ph/50&60Hz		J 200-240V/3ph/50&60Hz		H 525-600V/3ph/50&60Hz	
		Compressor Name	Code No	Compressor Name	Code No	Compressor Name	Code No
VZH028	OSG	VZH028CGANA	120G0061	VZH028CJANA	120G0064	VZH028CHANA	120G0123
	OSG	VZH028CGANB	120G0188	VZH028CJANB	120G0186	VZH028CHANB	120G0187
VZH035	OSG	VZH035CGANA	120G0060	VZH035CJANA	120G0063	VZH035CHANA	120G0124
	OSG	VZH035CGANB	120G0185	VZH035CJANB	120G0183	VZH035CHANB	120G0184
	OLS	VZH035CGBNA	120G0073	VZH035CJBNA	120G0076	-	-
	OLS	VZH035CGBNB	120G0247	VZH035CJBNB	120G0246	-	-
VZH044	OSG	VZH044CGANA	120G0059	VZH044CJANA	120G0062	VZH044CHANA	120G0125
	OSG	VZH044CGANB	120G0182	VZH044CJANB	120G0180	VZH044CHANB	120G0181
	OLS	VZH044CGBNA	120G0072	VZH044CJBNA	120G0075	VZH044CHBNA	120G0177
	OLS	VZH044CGBNB	120G0245	VZH044CJBNB	120G0244	VZH044CHBNB	120G0243

Compressor Industrial pack

Compressor model	Equipment version	G 380-480V/3ph/50&60Hz		J 200-240V/3ph/50&60Hz		H 575-600V/3ph/50&60Hz	
		Compressor Name	Code No	Compressor Name	Code No	Compressor Name	Code No
VZH028	OSG	VZH028CGANA/I	120G0138	VZH028CJANA/I	120G0135	VZH028CHANA/I	120G0129
	OSG	VZH028CGANB/I	120G0179	VZH028CJANB/I	120G0259	VZH028CHANB/I	120G0178
VZH035	OSG	VZH035CGANA/I	120G0139	VZH035CJANA/I	120G0136	VZH035CHANA/I	120G0130
	OSG	VZH035CGANB/I	120G0258	VZH035CJANB/I	120G0256	VZH035CHANB/I	120G0257
VZH044	OSG	VZH044CGANA/I	120G0140	VZH044CJANA/I	120G0137	VZH044CHANA/I	120G0131
	OSG	VZH044CGANB/I	120G0255	VZH044CJANB/I	120G0253	VZH044CHANB/I	120G0254

VZH converter order information

CDS803 drive			
Voltage	Compressor	Description	Code NO
T2 200-240V/3ph/50&60Hz	VZH028	CDS803P6K0T2E20H4	134N4260
	VZH035	CDS803P7K5T2E20H4	134N4261
	VZH044	CDS803P10KT2E20H4	134L9470
T4 380-480V/3ph/50&60Hz	VZH028	CDS803P6K0T4E20H4	134N4262
	VZH035	CDS803P7K5T4E20H4	134N4263
	VZH044	CDS803P10KT4E20H4	134L9473

LCP: user interface 120Z0581 (accessory)

CDS303 drive			
Voltage	Compressor	Description	Code NO
T6 525-600V/3ph/50&60Hz	VZH028	CDS303P7K5T6E20HX	134X8358
	VZH035	CDS303P11KT6E20HX	135N3582
	VZH044	CDS303P11KT6E20HX	135N3582

LCP: user interface 120Z0326 (accessory)

Rotolock adaptor

Type	Code n°	Description	Application	Packaging	Pack size
	120Z0366	Rotolock adaptor (1-1/4" ~ 3/4")	VZH028-044 suction	Multipack	10
	120Z0365	Rotolock adaptor (1" ~ 1/2")	VZH028-044 discharge	Multipack	10

Valves, adapters, connectors & gaskets for use on suction and discharge connections

Solder sleeve adapter sets

Type	Code n°	Description	Application	Packaging	Pack size
	120Z0126	Solder sleeve adapter set (1"1/4 Rotolock, 3/4" ODF), (1" Rotolock, 1/2" ODF)	VZH028-044	Multipack	6

Crankcase heaters & thermostats

Crankcase heaters

Type	Code n°	Description	Application	Packaging	Pack size
	120Z5040	Belt type crankcase heater,65W,230V,CE mark,UL(wire length: 1270mm)	VZH028-044	Multipack	4
	120Z5041	Belt type crankcase heater,55/70W,400/460V,CE mark,UL(wire length: 1270mm)		Multipack	4

Lubricant, acoustic hoods and spare parts

Acoustic hoods

Type	Code n°	Description	Application	Packaging	Pack size
	120Z5083	Acoustic hood	VZH028-044	Single pack	1

Oil level switch

Type	Code n°	Description	Application	Packaging	Pack size
	120Z0561	Oil level switch - electrical part (24V AC/DC)	All models	Single pack	1
	120Z0562	Oil level switch - electrical part (230V AC)	All models	Single pack	1

Mounting kits

Type	Code n°	Description	Application	Packaging	Pack size
	120Z0622	Mounting kit for 1 scroll compressor including 4 grommets, 4 sleeves, 4 bolts, 4 washers, 2 grounding screws	VZH028-044	Single pack	1

Terminal boxes, covers & T-block connectors

Type	Code n°	Description	Application	Packaging	Pack size
	120Z5015	Terminal box cover	VZH028-044	Multipack	10

Lubricant

Type	Code n°	Description	Application	Packaging	Pack size
320HV	120Z5034	PVE68 Lubricant, 2 liter can	VZH028-044	Multipack	12

Spare parts frequency converter

LCP's

Type	Code n°	Description	Application	Packaging	Pack size
	120Z0581	LCP	Frequency converter 803 / VZH028-044 code G & code J	Single pack	1
	120Z0617	LCP kit for remote mounting contains rubber sealing, 3m cable, bracket and screws	Frequency converter CDS803 / VZH028-044 code G & code J	Single pack	1
	120Z0326	LCP	Frequency converter CDS303/ VZH028-044 code H	Single pack	1

Decoupling Plate

Frame	Compressor		Decoupling plate	Packaging	Pack size
	200-240V	380-480V			
H3	-	VZH028/035	120Z0582	Single pack	1
H4	VZH028/035	VZH044	120Z0583	Single pack	1
H5	VZH044	-	120Z0583	Single pack	1

Note: use the decoupling plate for EMC correct installation

ENGINEERING
TOMORROW

Danfoss Commercial Compressors

is a worldwide manufacturer of compressors and condensing units for refrigeration and HVAC applications. With a wide range of high quality and innovative products we help your company to find the best possible energy efficient solution that respects the environment and reduces total life cycle costs.

We have 40 years of experience within the development of hermetic compressors which has brought us amongst the global leaders in our business, and positioned us as distinct variable speed technology specialists. Today we operate from engineering and manufacturing facilities spanning across three continents.

Danfoss Turbocor Compressors

Danfoss Inverter Scrolls

Danfoss Scrolls

Danfoss Maneurop Reciprocating Compressors

Danfoss Optyma Condensing Units

Danfoss Light Commercial Refrigeration Compressors

Our products can be found in a variety of applications such as rooftops, chillers, residential air conditioners, heatpumps, coldrooms, supermarkets, milk tank cooling and industrial cooling processes.

http://cc.danfoss.com

Danfoss Commercial Compressors, BP 331, 01603 Trévoux Cedex, France | +334 74 00 28 29

member of:
ASERCOM
www.asercom.org

Danfoss can accept no responsibility for possible errors in catalogues, brochures and other printed material. Danfoss reserves the right to alter its products without notice. This also applies to products already on order provided that such alterations can be made without subsequential changes being necessary in specifications already agreed.
All trademarks in this material are property of the respective companies. Danfoss and the Danfoss logotype are trademarks of Danfoss A/S. All rights reserved.

AB225886435375en-001001

© Danfoss | DCS (CC) | 2019.07