ENGINEERING
TOMORROW

Application guidelines

Danfoss scroll compressors
VZH052-065
Single

R410A

http://cc.danfoss.com

Danfoss scroll compressors are designed and manufactured according to the state of the art and to valid European and US regulations. Particular emphasis has been placed on safety and reliability. Related instructions are highlighted with the following icons:

This icon indicates instructions to avoid safety risk.

This icon indicates instructions to avoid reliability risk.

The purpose of this guideline is to help customers qualify compressors in the unit. You are strongly advise to follow these instructions. For any deviation from the guidelines, please contact Danfoss Technical Support. In any case, Danfoss accepts no liability as a result of the improper integration of the compressor into the unit by the system manufacturer.

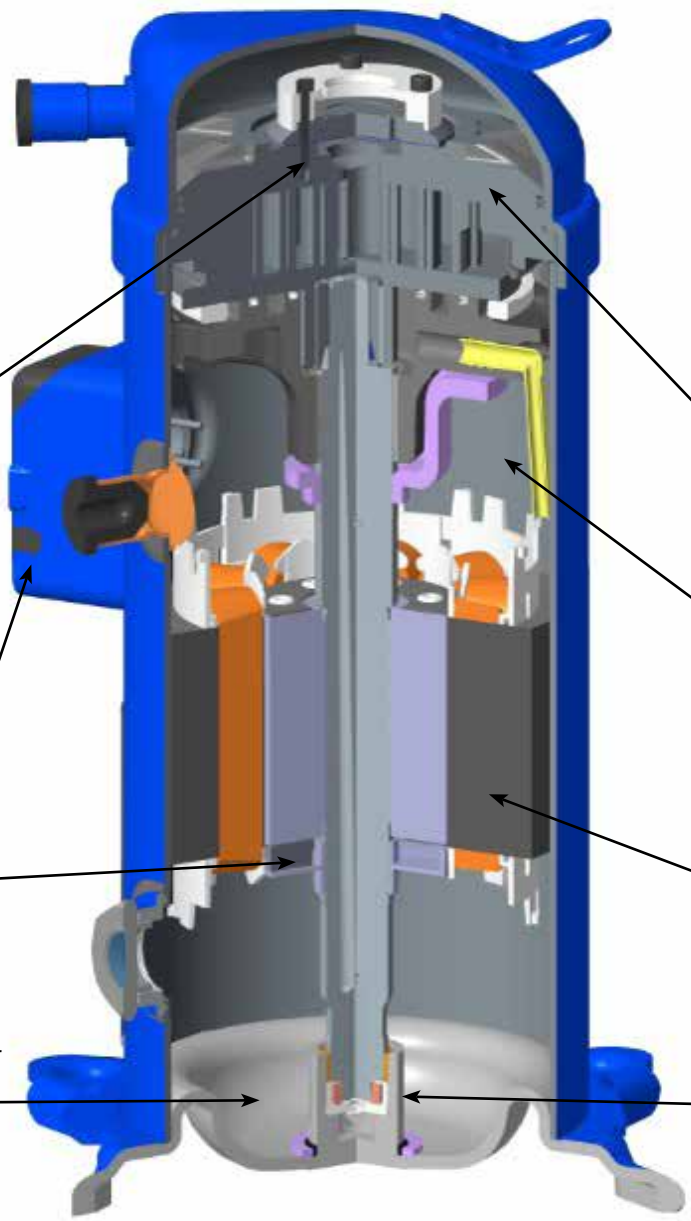

How do IDVs work?

Danfoss Intermediate Discharge Valves (IDVs) are located close to the discharge side of the compressor. They reduce excessive compression of refrigerant under part-load conditions while maintaining the same cooling capacity. The IDVs open when discharge pressure falls below the built-in optimization point. They adapt the effort of the motor to the varying load and pressure conditions in the system, thus reducing the effort of the motor and its electrical consumption and improving the system's seasonal energy efficiency.

Nomenclature

Compressor nomenclature

V Z H 065 C G A N B

Variable speed

Family
VZH scroll

Lubricant
PVE 32 (160 HV) lubricant,
R410A refrigerant

Swept volume
in cm^3/rev

Design pressure ratio
C: IDV and part load
efficiency optimized

Evolution index

Motor protection type
N: no internal motor protection
(protection by drive)

Equipement version
A: brazed connections, single version
D: brazed connections, unified version

	Oil sight glass	Oil level switch
Single version	Threaded	None
Unified version	Threaded	Threaded

Motor voltage code to CDS303 *
G: 380-480V/3~/50 & 60Hz
H: 525-600V/3~/50 & 60Hz
J: 200-240V/3~/50 & 60Hz
* main supply voltage to frequency converter

Frequency converter nomenclature

CDS 303 P11K T4 E20 H2

Dedicated compressor drive for VZH scroll

Serie 303

High overload output power
in kW
P11K/P15K/P22K

RFI class
H2/H3/HX

Enclosure protection
IP rating
E20/E55

Main supply voltage
T2: 200-240V/3 ph/50-60 Hz
T4: 380-480V/3 ph/50-60 Hz
T6: 525-600V/3ph/50-60 Hz

Note:
High overload output power: output power @160% Torque

Compressor size

To have the optimum compressor selection, select a compressor size which achieves the peak load system cooling capacity demand at its maximum speed.

Detailed performances can be found in datasheets and in selection programs.

Frequency converter variants

Different frequency converter variants are available according to:
1. Mains supply voltage
2. IP class (CDS303 drives are available in IP20 or IP55 housings)
3. RFI (Radio Frequency Interference) class H2/H3 or HX.
4. Printed Circuit Board (PCB) coated

Compressor and frequency converter combinations

When the compressor size and mains voltage have been defined in the above selection criteria, the code number tables from the "Ordering information and packaging" section provides the appropriate frequency converter sizes and up to four corresponding code numbers for each compressor model.

⚠ **Note this compressor is equipped with a six-pole electrical motor so the applied frequency from the inverter will be 50 Hz for 1000 rpm up to 330 Hz for 6600 rpm.**

Please refer to the table below

		min	max
Compressor speed	rps	16.7	110
	rpm	1000	6600
Drive output frequency	Hz	50	330

Compressor specifications

Compressor model	Swept volume		Displacement								Oil charge		Net weight	
			1000 rpm		3000 rpm		3600 rpm		6600 rpm					
	(cm^3/rev)	(cu.in/rev)	(m^3/h)	(cu.ft/h)	(m^3/h)	(cu.ft/h)	(m^3/h)	(cu.ft/h)	(m^3/h)	(cu.ft/h)	(dm^3)	(oz)	(kg)	(lbs)
VZH065	65.1	4.0	3.9	138	11.7	413	14.1	498	25.8	911	1.57	53	35	77
VZH052	52.1	3.2	3.1	109	9.4	332	11.3	399	20.6	727	1.57	53	35	77

Frequency converter specifications

Mains supply voltage	T2: 200 - 240 V ±10% (3-phase)
	T4: 380 - 480 V ±10% (3-phase)
	T6: 525 - 600V ±10% (3-phase)
Supply frequency	50 / 60 Hz
Output voltage	0 - 100 % of supply voltage
Inputs	6 digital (0-24V), 2 analog (0/±10V or 4-20mA, scalable)
Programmable outputs	2 digital (0-24V), 1 analog (0/4-20mA), 2 relay
Protection functions	Over-current protection, low / high current handling
Compressor functions	Motor protection, compressor ramp up/down control

OIL level sensor

A TEKLAB LC-XN optical-electrical level sensor is fixed on the inverter compressor. The oil level sensor prism is fixed on the compressor, the electrical part is ordered by accessory kit. The oil level sensor monitors the compressor oil level and sends oil level signal to an external relay or digital input of unit controller. A 5±2 seconds delay is recommended to mitigate oil level fluctuationand avoid false alarms.

- Lack of oil: Circuit between 2 and 3 will be opened internally, there will be no current flowing through load or coil of external relay, relay is open.

- Enough oil: Circuit between 2 and 3 will be closed internally, there will be current flowing through load or coil of external relay, relay is close.

Note: For 24VDC, output voltage in case of lack of oil is >13V DC and not 0V

For customers who needs UL certificates, please order 24V AC/DC sensor.

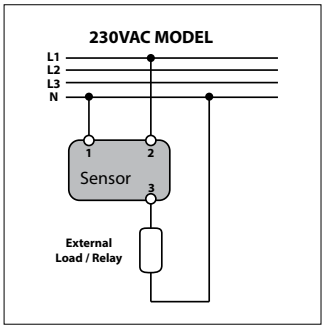

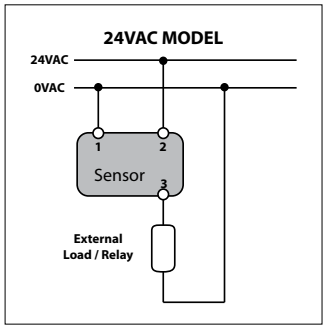

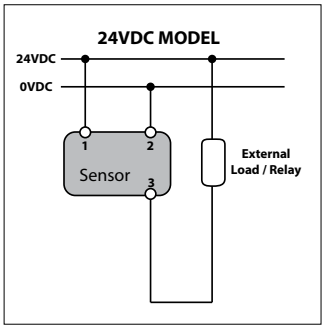

Oil level sensor is a special component which assembles on variable speed compressor. It is provided in oil level sensor accessory kit.

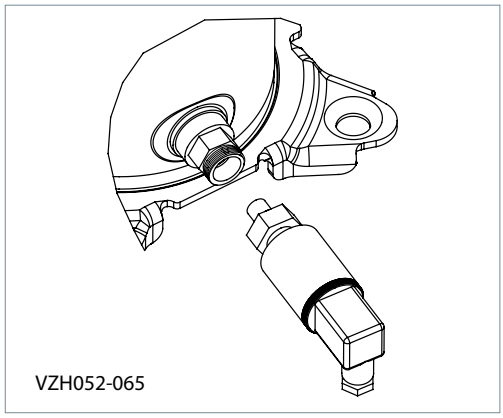

VZH052-065G/J/H

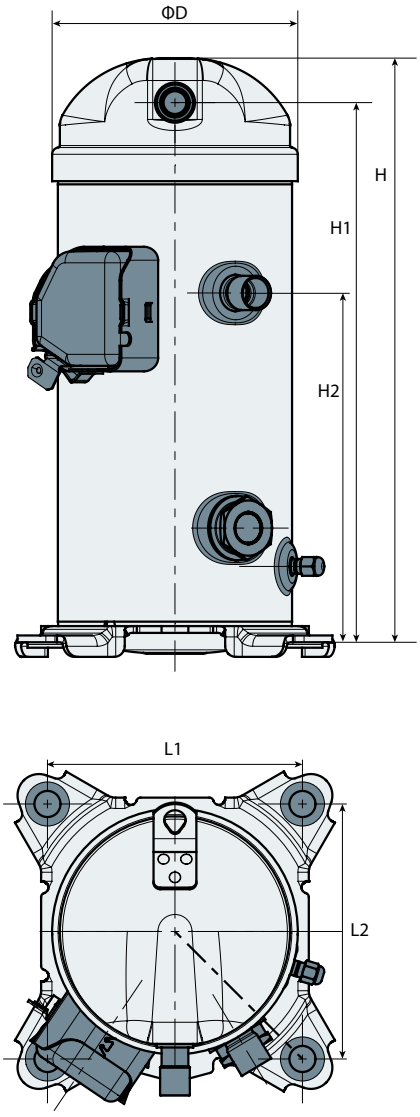

Single version

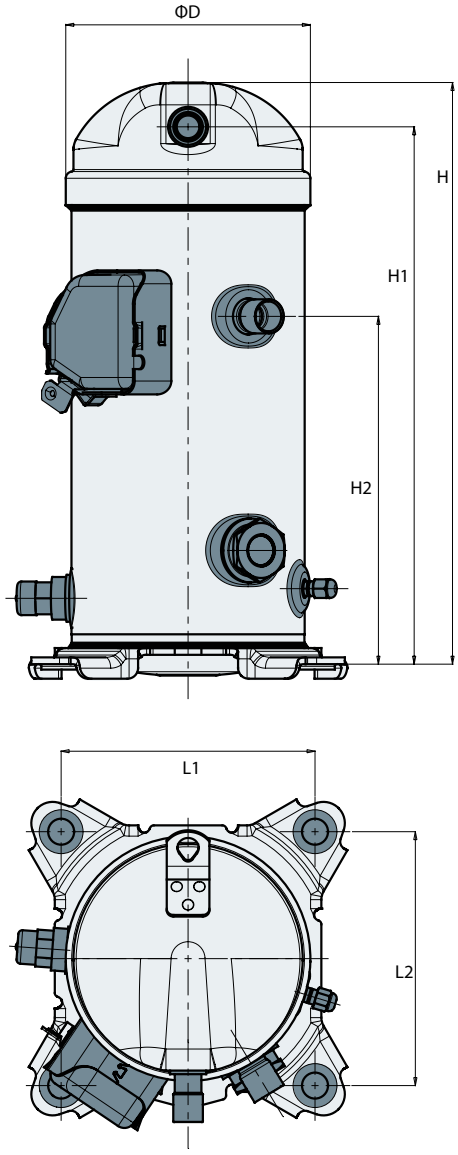

Unified version

Terminal box

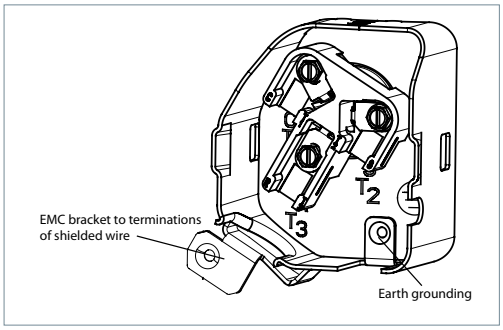

Mounting Grommet

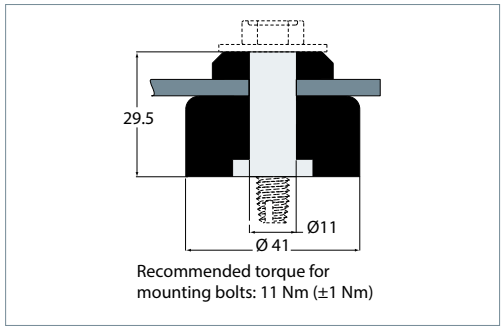

Version	Compressor model	D		H		H1		H2		L1		L2		Outline drawing number
		(mm)	(inch)	(mm)	(inch)	(mm)	(inch)	(mm)	(inch)	(mm)	(inch)	(mm)	(inch)	
Single	VZH052-065	183.5	7.22	436	17.17	403	15.87	261	10.28	190.5	7.5	190.5	7.5	8590007
Unified	VZH052-065	183.5	7.22	436	17.17	403	15.87	261	10.28	190.5	7.5	190.5	7.5	8590013

Connection Details

	VZH052-065 single version
Suction connection	Brazed 7/8"
Discharge connection	Brazed 3/4"
Oil sight glass	Threaded (1"1/8 – 18 UNF)
Oil equalization connection	-
Shrader	Male 1/4" Flare incorporating a Schrader valve

1) VZH compressors single versions come equipped with a threaded oil sight glass with 1"1/8 – 18 UNEF connection. It can be used for a visual check of oil amount and condition.

2) Schrader: The oil fill connection and gauge port is a 1/4" male flare connector incorporating a Schrader valve.

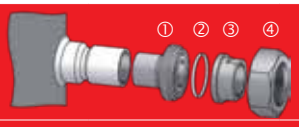

Compressor models	Brazed connection size		Rotolock adaptor set (①adaptor, ②gasket, ③sleeve, ④nut)			Rotolock adaptor (① adaptor only)
			Rotolock	Solder sleeve ODF	Code Number	Code Number
VZH052-065	Suction	7/8"	1-1/4"	7/8"	120Z0128	120Z0367
	Discharge	3/4"	1-1/4"	3/4"		120Z0366

VZH compressors are all delivered with suction and discharge brazed connections only. They are copper-plated steel connections.

Rotolock adaptors are available, refer to the information above.

CDS303 Frequency converter

Frequency converter dimensions depend on supply voltage, IP rating and power. The table below gives an overview of the overall dimensions and different drive enclosures (B1 - B4). Details for each drive enclosure are on the following pages.

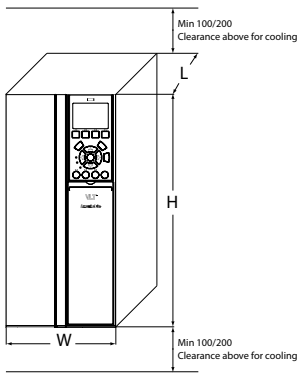

Drive supply voltage	Drive power kW	Compressor voltage code	Compressor model	IP20				IP55			
				Drive enclosure	Overall drive size [H x W x L] mm (inch)	Overall drive size [H x W x L] mm (inch) incl. decoupling plate	Clearance above/ below mm (inch)	Drive enclosure	Overall drive size [H x W x L] mm (inch)	Overall drive size [H x W x L] mm (inch) incl. decoupling plate	Clearance above/ below mm (inch)
T2: 200-240/3/50-60	11	J	VZH052-065	B4	520x230x242 (20.47x9.06x9.53)	595x230x242 (23.43x9.06x9.53)	200 (8)	B2	650x242x260 (25.59x9.53x10.24)	-	200 (8)
T4: 380-480/3/50-60	11*	G	VZH052	B3	399x165x249 (15.71x6.5x9.8)	420x165x249 (16.54x6.5x9.8)	100 (4)	B1	480x242x260 (18.90x9.53x10.24)	-	100 (4)
	15		VZH065	B3	399x165x249 (15.71x6.5x9.8)	420x165x249 (16.54x6.5x9.8)	100 (4)	B1	480x242x260 (18.90x9.53x10.24)	-	100 (4)
T6: 525-600/3/50-60	15	H	VZH052	B3	399x165x249 (15.71x6.5x9.8)	420x165x249 (16.54x6.5x9.8)	100 (4)	B1	480x242x260 (18.90x9.53x10.24)	-	100 (4)
	22		VZH065	B4	520x230x242 (20.47x9.06x9.53)	595x230x242 (23.43x9.06x9.53)	200 (8)	B2	650x242x260 (25.59x9.53x10.24)	-	200 (8)

Variable speed compressor package VZH065 (voltage code G) + CDS303 (T4, 11kW) is qualified, to be used at drive supply voltage 380-440V (3 phase, 50/60Hz).
Any further information please contact local Danfoss engineers.

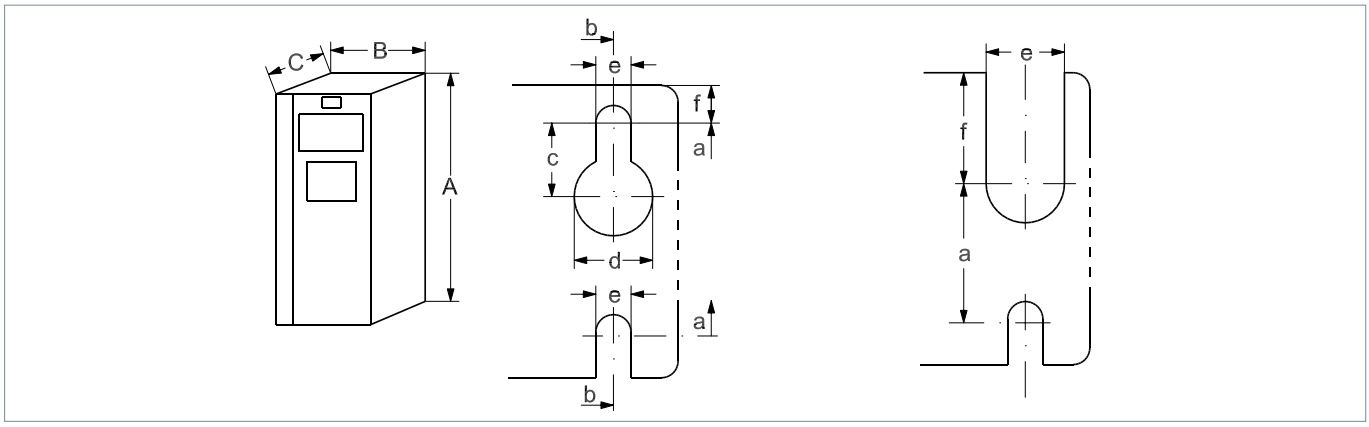

Enclosure		Height						Width				Depth		Mounting hole						Max. Weight	
Frame	IP Class	A		A[1)]		a		B		b		C		d		e		f			
		(mm)	(inch)	(mm)	(inch)	(mm)	(inch)	(mm)	(inch)	(mm)	(inch)	(mm)	(inch)	(mm)	(inch)	(mm)	(inch)	(mm)	(inch)	kg	lb
B1	IP55	480	18.9	-	-	454	17.87	242	9.53	210	8.27	260	10.24	19	0.75	9	0.35	9	0.35	23	51
B2	IP55	650	25.59	-	-	624	24.57	242	9.53	210	8.27	260	10.24	19	0.75	9	0.35	9	0.35	27	60
B3	IP20	399	15.71	420	16.54	380	14.96	165	6.5	140	5.51	249	9.80	12	0.47	6.8	0.27	7.9	0.31	12	26
B4	IP20	520	20.47	595	23.43	495	19.49	230	9.06	200	7.87	242	9.53	-	-	8.5	0.33	15	0.59	23	51

A[1)] Including decoupling plate.

The dimensions are only for the physical units, but when installing in an application it is necessary to add space for free air passage both above and below the units.
The amount of space for free air passage is listed in "frequency converter dimensions - Clearance above/below (mm/inch)".

Supply voltage

Because VZH compressors are powered by a frequency converter, the mains frequency, 50 or 60 Hz, is no longer an issue. Only the mains voltage is to be taken into account. With 3 motor voltage codes, the most common mains voltages and frequencies are covered. Never connect the VZH compressor directly to the mains power supply in case of motor burnt.

Voltage code	Mains voltage range of drive
J	200-240V / 3ph / 50Hz & 60Hz (±10%)
G	380-480V / 3ph / 50Hz & 60Hz (±10%)
H	525-600V /3ph / 50Hz & 60Hz (±10%)

Compressor electrical specifications

Compressor rated voltage (V)	Model	RW(Ω) at 20°C line to line	RLA (A)	Max Operating Current (A)
400	VZH052-G	0.177Ω±7%	22.6	26
575	VZH052-H		22.6	26
400	VZH065-G		27.2	31.2
575	VZH065-H		27.2	31.2
208	VZH052-J	0.053Ω±7%	44.2	50.7
208	VZH065-J		55.3	63.6

RW: Winding resistance per winding, measured at motor terminals
RLA: Rated load Amp

RLA (Rated Load Amp)

Rated Load Amp value is the current value at maximum load, in the operating envelope, and at maximum speed and rated drive input voltage.

RLA is the measured value at the compressor terminals (after the drive).

MOC (Max Operating Current)

Max operating current is the maximum continuous current which is 115% of RLA. This value is printed on compressor nameplate. MOC can be used to select cables and contactors.

Wiring connections

Electrical power is connected to the compressor terminals by Ø 4.8mm (3/16") screws. The maximum tightening torque is 3Nm. Use a 1/4" ring terminal on the power leads.

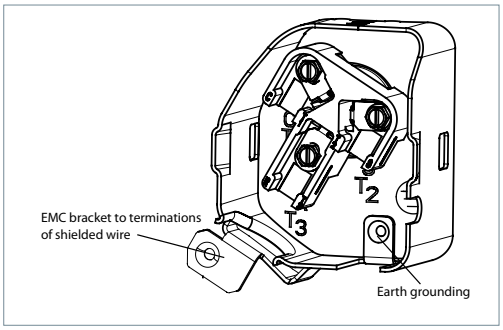

Terminal cover mounting

The terminal cover and gasket should be installed prior to operation of the compressor. The terminal cover has two outside tabs, 180 degrees apart, that engage the terminal fence. When installing the cover, check that it is not pinching the lead wires.

Terminal cover removal

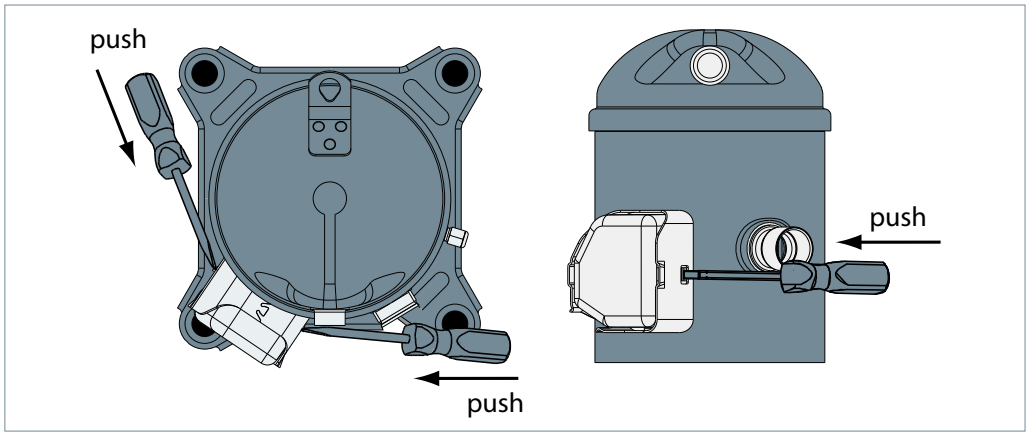

Fuses

Danfoss recommends using the fuses listed below to protect service personnel and property in case of component break-down in the frequency converter.

For circuit breakers, Moeller types have been tested and are recommended.

Frequency converter	EN50178 compliant fuses		UL Compliant fuses					Recommended circuit breaker	
			Bussmann			SIBA	Little fuse	IP20	IP55
	Size	Type	Type RK1	Type J	Type T	Type RK1	Type RK1	Moeller type	
3x200-240V									
CDS303-11kW	80A	gG	KTN-R80	JKS-80	JJN-80	5014006-080	KLN-R80	NZMB1-A100	NZMB1-A100
3x380-480V									
CDS303-11kW	63A	gG	KTS-R40	JKS-40	JJS-40	5014006-040	KLS-R40	PKZM4-50	PKZM4-63
CDS303-15kW	63A	gG	KTS-R50	JKS-50	JJS-50	5014006-050	KLS-R50	PKZM4-50	PKZM4-63
3x525-600V									
CDS303-15kW	63A	gG	KTS-R-45	JKS-45	JKJS-45	5014006-050	KLSR045	PKZM4-50	PKZM4-63
CDS303-22kW	63A	gG	KTS-R-60	JKS-60	JJS-60	5014006-063	KLSR060	NZMB1-A100	NZMB1-A100

Wire sizes

Below table lists maximum wiring sizes for the motor compressor power supply cables.

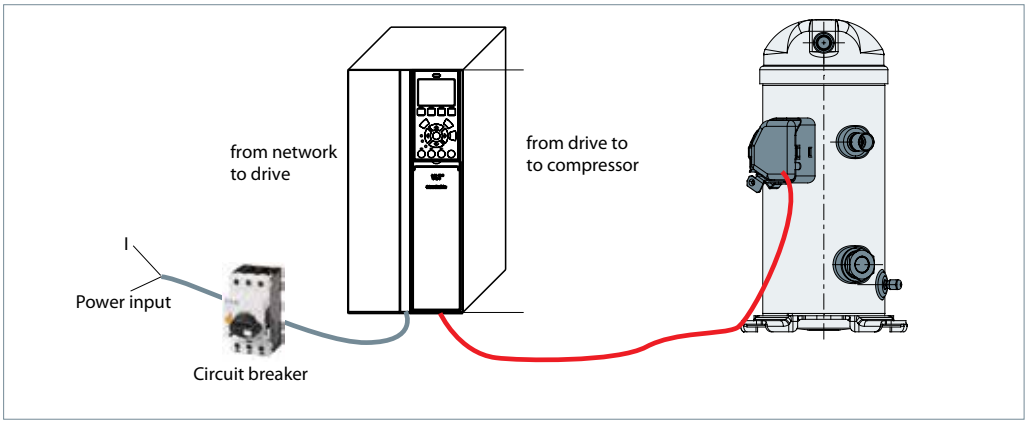

	From network to frequency converter			From frequency converter to compressor		
	Type	mm²	AWG	Type	mm²	AWG
200 - 240 V	CDS303-11kW	10	8	VZH052-J	10	8
	CDS303-11kW	16	6	VZH065-J	16	6
380 - 400 V	CDS303-11kW	4	12	VZH052-G	4	12
	CDS303-15kW	4	12	VZH065-G	6	10
525 - 600 V	CDS303-15kW	4	12	VZH052-H	4	12
	CDS303-22kW	4	12	VZH065-H	6	10

Note: The wire size in the guideline is the maximum wire size that connectors can accept but not the actual needed cable. The needed cable size should be specified by the OEM depending on the unit design, ambient temperature, the wire material, current, etc...

Soft-start control

The CDS303 frequency converter generates by design a compressor soft start with an default initial ramp up of 7.5s to 50 rps.

Current inrush will not exceed the frequency converter maximum current.

Basically seen from the mains, the inrush peak reach a level which is only a few percent more than the rated nominal current.

Phase sequence and reverse rotation protection

The compressor will only operate properly in a single direction. If electrical connections are done correctly between the drive and the compressor terminals (compressor T1/T2/T3 and drive terminals U, V & W matching), the drive will provide correct phase supply to the compressor, and reverse rotation will be not possible:

- CDS terminal U (96) to VZH terminal T1
- CDS terminal V (97) to VZH terminal T2
- CDS terminal W (98) to VZH terminal T3

If compressor T1/T2/T3 and drive U, V & W terminals are not matching, the compressor can operate in a reverse rotation. This results in excessive noise, no pressure differential between suction and discharge, and suction line warming rather than immediate cooling. The compressor can be rapidly damaged in these conditions.
If reverse rotation symptoms occur, shut the compressor down and connect the phases to their proper terminals.

Mains connection to the CDS frequency converter order has no influence on the output phase sequence which is managed by the frequency converter.

IP rating

The compressor terminal box IP rating according to IEC529 is IP22.

Element	Numerals or letters	Meaning for the protection of equipment
First characteristic numeral	0 1 2 3 4 5 6	Against ingress of solid foreign objects (non protected) ≥ 50 mm diameter ≥ 12.6 mm diameter ≥ 2.5 mm diameter ≥ 1.0 mm diameter dust protected dust tight
Second characteristic numeral	0 1 2 3 4 5 6 7 8	Agains ingress of water with harmful effects (non protected vertically dripping dripping (15° tilted) spaying splashing jetting powerful jetting temporary immersion continuous immersion

Motor protection

VZH scroll compressors are not equipped with an internal motor protector. Motor protection is provided by the variable speed drive. All parameters are factory preset in order to guaranty locked rotor or overload current protection.

When a warning situation is reached in the current control, the CDS frequency converter will automatically reduce the compressor speed in order to keep the motor current of the compressor below the maximum allowed.

Voltage imbalance

The maximum allowable voltage imbalance between each phase is 3%. Voltage imbalance causes high amperage over one or several phases, which in turn leads to overheating and possible drive damage.

Approvals and certificates

VZH compressors comply with the following approvals and certificates.

CE (European Directive)	CE	VZH code G & code J
UL (Underwriters Laboratories)	c UL us	All VZH models
EMC Class A Group 1 2014/30/EU		VZH compressor and drive package
CCC		VZH code G

Low voltage directive 2014/35/EU

Products	VZH052-065
Declaration of conformity ref. Low voltage directive 2014/35/EU	Contact Danfoss

Internal free volume

Products	Internal free volume at LP side without oil (lite/cu.inch)
VZH052	4.7/287
VZH065	4.7/287

Direct and indirect exposure of drive to water

IP20 drives are intended for indoor or cabinet mounting. Application example: drive fitted in a machine room, basement or in an electrical cabinet together with other electric / electronic components such as the unit controller or contactors.

For outdoor use the electrical cabinet must be IP54 or the drive itself must be IP54. Application example: rooftop units or condensing units.

If IP54 with LCP make sure that the gasket is applied to ensure tightness.

It is recommended to place drive at least 30cm from ground to protect against floods.

Condensation

Condensation must always be avoided. There is a specific risk of condensation when the frequency converter or some of its components are colder than moist ambient air. In this situation, the moisture in the air can condense on the electronic components.

- Operating with the frequency converter constantly connected to the mains can help to reduce the risk of condensation. Install a cabinet heater in situations where there is a real possibility of condensation due to ambient conditions.

- If the drive is IP 20, then evaluate and prevent possibility of condensation above drive. Example: condensation on metallic frame above drive, piping… If unavoidable, solutions like cabinet heater, a pace heater, top hat on the drive, insulation in the electric panel can be a solution.

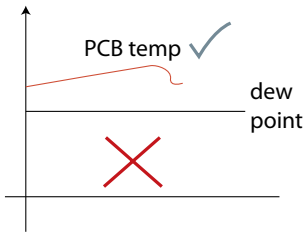

- Water resulting of condensation must not accumulate on the bottom of electric panel. Provide a drain for condensed water to run out if necessary.

- No other forced cooling then internal drive fan.

Dust Exposure

Avoid Dust forms and deposits on the surface of the drive and inside on circuit boards and the electronic components. These deposits act as insulation layers and hamper heat transfer to the ambient air, reducing the cooling capacity. The components become warmer. This causes accelerated aging of the electronic components, and the service life of the unit decreases. Dust deposits on the heat sink in the back of the unit also decrease the service life of the unit.

The drive cooling fans have small bearings into which dust can penetrate and act as an abrasive. This leads to bearing damage and fan failure.

Under the conditions described above, it is advisable to clean the frequency converter during periodic maintenance. Remove dust off the heat sink and fans and clean the filter mats.

Mechanical Mounting Clearance

For optimal cooling conditions, mount the drive on vertical position. Allow a free air passage above and below the frequency converter. See Table below:

Enclosure type	B1	B2/B3/B4
a [mm / inch]	100 / 3.94	200 / 7.87
b [mm / inch]	100 / 3.94	200 / 7.87

Horizontal mounting is NOT the preferred position, however if unavoidable, lay PCB on the left side (270°) to avoid condensation accumulation on the electronics.

Ambient temperature

The maximum ambient temperature for the drive is 50°C.

Make sure that the clearance limits described above are respected.

The drive must be installed on a wall or on a back plate to ensure proper cooling.

Do not place the drive under direct sunlight. Insulation inside the electrical panel can reduce impact of sun radiation.

Test at the unit at highest ambient maximum load is recommended. Look for over temperature drive alarm.

The drive could operate lower to -10C with proper operation, such as inside the cabinet, install the space heater. However, LCP may not function well under such low temperature.

EMC best practices

- Use screened (shielded) cables for motor, control wiring and communication.
- Separate cables for input power, motor wiring and control wiring. Failure to isolate power, motor, control and communication cables can result in unintended behavior or reduced performance. Minimum 200 mm (7.9 in) clearance between power, motor and control cables is required.
- Ensure VFD proper grounding
- Motor cables should be as short as possible to reduce noise level and leakage currents.
- Use the decoupling plate to fix and terminate cables (Refer to EMC correct installation of an frequency drive CDS303)
- Add ferrite cores on power lines and earth line if necessary to pass EMC class A.

EMC correct installation of an frequency drive CDS303

EMC qualification reports are available upon request to Danfoss technical support.

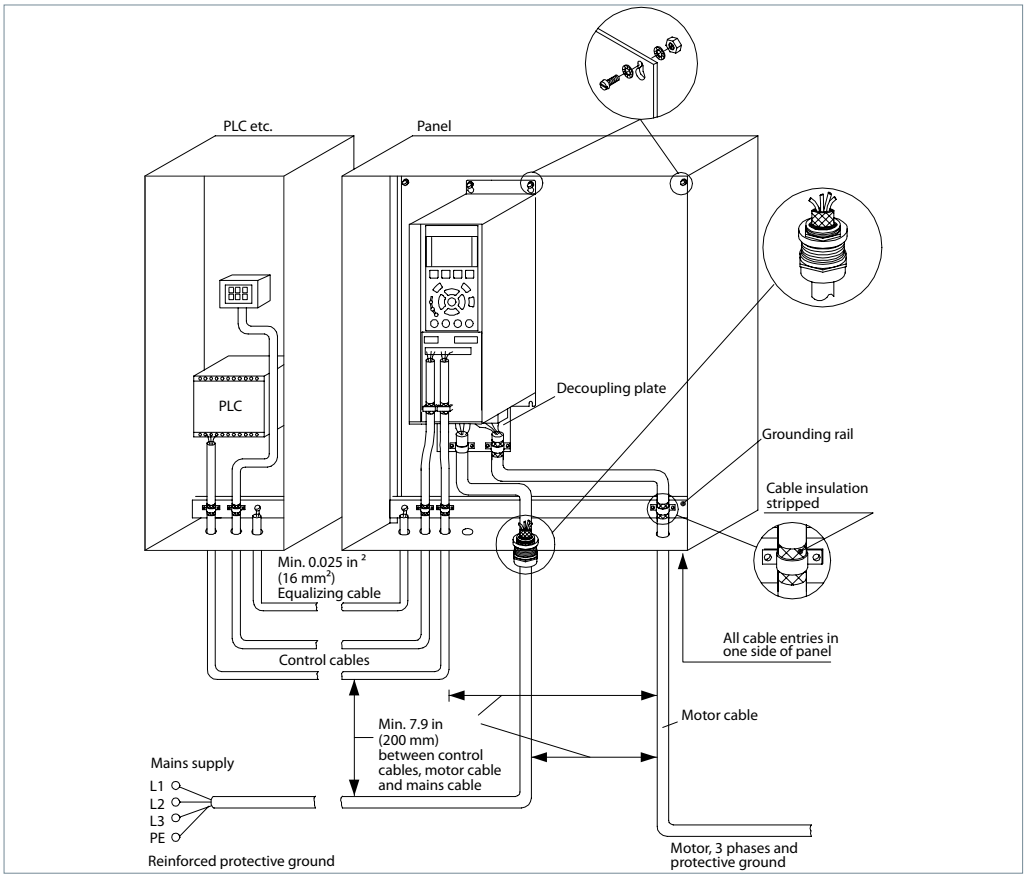

EMC remediation

For some models, ferrite cores need to be added to the input and/or output of CDS303 drive, as a remediation, to fulfil the Class A Group 1 emission and immunity requirements.

Compressor	CDS303 drive			Remediation (ferrite cores)	
	Power size	Voltage	RFI filter	Drive input Material: manganese zinc ferrite core	Drive output Material: nickel zinc ferrite core
VZH052CJ	11kW	T2	H2	-	Y
VZH052CG	11kW	T4	H2	Y	Y
VZH065CG	11kW	T4	H2	Y	Y
VZH065CG	15kW	T4	H2	Y	Y
VZH065CG	15kW	T4	H3	-	-

EMC remediation

To pass EMC class A, for the above models, ferrite cores (4pcs) need to be added on both the power lines and the earth line, in addition, a knot has to be tied on each line. Ferrite core is a common anti-interference component in electronic circuits, which helps to reduce electromagnetic interference at different frequency.

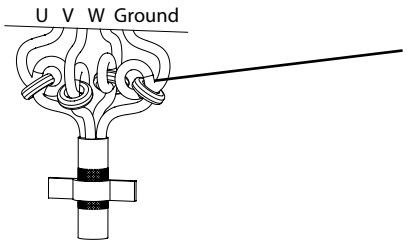

Ferrite core: each line should snatch one turn on it.

Ferrite cores should be as close as possible to the drive.

Mechanical dimension

The dimension of the ferrite core depends on the actual cable size, which should be specified by the OEM depending on the unit design, ambient temperature, the wire material, current, etc. The table below is a recommendation.

Wire sizes		Mechanical dimension [mm / inch]		
AWG	mm²	ID	OD	T
6	16	30 / 1.18	50 / 1.97	20 / 0.79
8	10	19 / 0.75	31.5 / 1.24	12.5 / 0.49
10	6	19 / 0.75	31.5 / 1.24	12.5 / 0.49
12	4	19 / 0.75	31.5 / 1.24	12.5 / 0.49

The frequency converter is pre-set for speed open loop control. This means that the speed set-point is given by a 0-10V, where 0V corresponds to the minimum compressor speed and 10V is maximum compressor speed.

The unit controller must have full control of the compressor operation and application protections such as compressor envelope control, oil return management and short cycling protection.

Below is the Danfoss proposed system configuration and wiring.

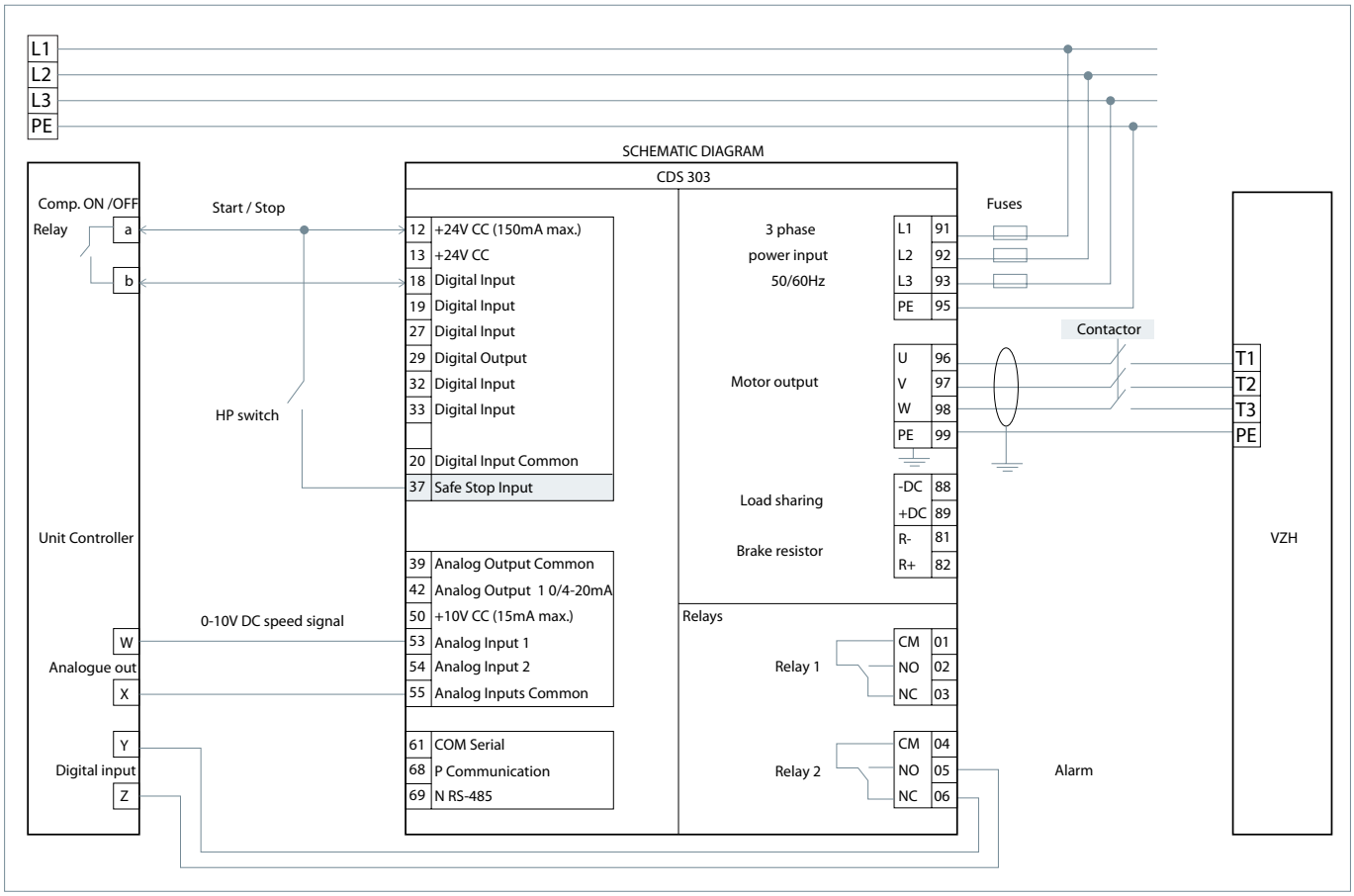

NOTE 1: Only relevant parameters or the ones different from factory defaults are shown.
NOTE 2: Oil boost, short cycle protection to be programmed in the unit controller
NOTE 3: Use Safe Stop for HP switch in CDS303 or use an output contactor (CDS803)

Drive parameters to adjust (See Note 1)

ID	Name	Setup 1	Factory Setup
341	Ramp 1 Ramp Up Time	180	30.00
342	Ramp 1 Ramp Down Time	180	30.00
512	Terminal 27 Digital Input	No operation	Stop inverse
540.1	Function Relay	Alarm	VLT running
2800	Short Cycle Protection	Disabled	Enabled
2810	Oil Return Management	Off	On

General requirements

Proper piping practices should be employed to:

1. Ensure adequate oil return, even under minimum load conditions (refrigerant speed, piping slopes…). For validation tests see section "Manage oil in the circuit".

2. Avoid condensed liquid refrigerant from draining back to the compressor when stopped (discharge piping upper loop). For validation tests see section "Manage off cycle migration".

General recommendations are described in the figures below:

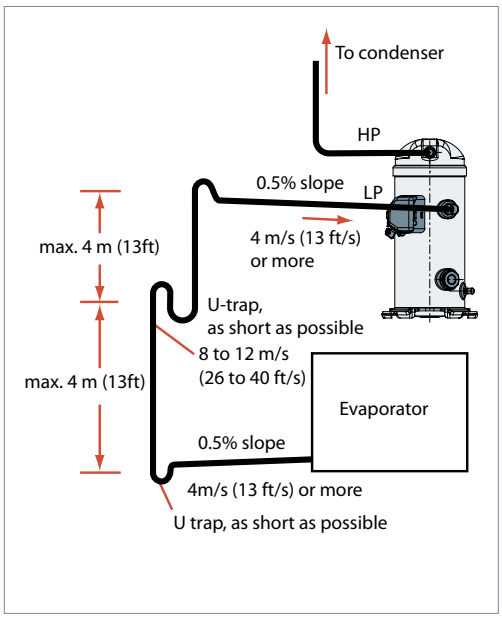

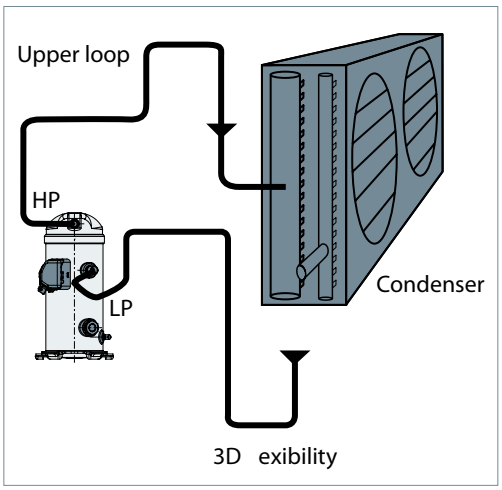

3. Piping should be designed with adequate three-dimensional flexibility to avoid excess vibration. It should not be in contact with the surrounding structure, unless a proper tubing mount has been installed. For more information on noise and vibration, see section on: "Sound and vibration management".

4. The design in this guideline is for short circuit application. However, for long circuit and split system application, an oil separator and an external non-return valve are mandatory to use.

General requirements

Compressors used in single applications must be mounted with flexible grommets.

During operation, the maximum inclination from the vertical plane must not exceed 7 degrees.

Single requirements

All compressors are delivered with four rubber grommets and metal sleeves. Compressors must always be mounted with these grommets. Recommended torque for mounting bolts: 11 Nm (±1 Nm).

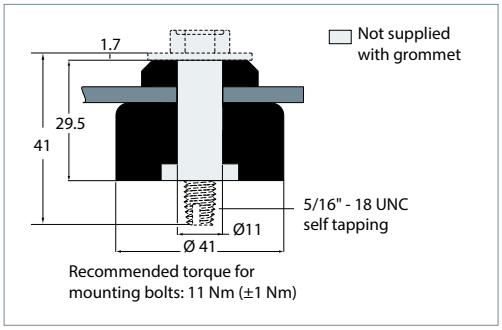

Requirement

R Oil level must be visible or full in the sight glass when the compressor is running and when all compressors of the circuit are stopped.

System evaluation

	Single compressor
Non split	Test N°1
Split	1. Since each installation is unique, test can not validate the oil return, Oil separator is mandatory 2. Pay special attention to "Piping design" on field 3. Oil level must be checked and adjusted at commissioning.

Test, criteria and solutions

Test N°	Purpose	Test condition	Pass criteria	Solutions
1	Check proper oil return	 Lowest foreseeable evaporation, and highest foreseeable condensation. **Minimum speed running** 6 hours. For reversible system, perform test in both heating and cooling mode.	Oil level must be visible or full in the sight glass when the compressor is running.	1. Top-up with oil, generally 1-2% of the total system refrigerant charge (in weight). Above 3% look for potential oil trap in the system. 2. Adjust oil boost function, for more details see section"Oil management logic". 3. Oil separator can be added

Typical sounds and vibrations in systems can be broken down into the following three categories:
- Sound radiation (through air)
- Mechanical vibrations (through parts and structure)
- Gas pulsation (through refrigerant)

The following sections focus on the causes and methods of mitigation for each of the above sources.

Compressor sound radiation

For sound radiating from the compressors, the emission path is air and the sound waves are travelling directly from the machine in all directions.

Sound levels are as follows:
- For compressors running alone:

Compressor model	Frequency RPS	200V		400V		575V		Acoustic hood code number
		Sound power dB(A)	Attenuation dBA ①	Sound power dB(A)	Attenuation dBA ①	Sound power dB(A)	Attenuation dBA ①	
VZH052-VZH065	60	79	9	79	9	79	9	120Z5084
	90	85	9	85	9	85	9	

Sound power and attenuation are given at ARI conditions, measured in free space
① Attenuation given with acoustic hood
Materials are UL approved

Mitigations methods:
We can consider two means to reduce compressors sound radiations:
1. Acoustic hoods are quick and easy to install and do not increase the overall size of the compressors. Acoustic hoods are available from Danfoss as accessories. Refer to the table above for sound levels, attenuation and code numbers.
2. Use of sound-insulation materials on the inside of unit panels is also an effective means to reduce radiation.

Note: During compressor shut down, a short reverse rotation sound is generated. The duration of this sound depends on the pressure difference at shut down and should be less than 3 seconds. This phenomenon has no impact on compressor reliability.

Mechanical vibrations

A compressor generates some vibrations that propagate into the surrounding parts and structure. The vibration level of a VZH compressor alone does not exceed 76 µm peak to peak. However, when system structure natural frequencies are close to running frequency, vibrations are amplified due to resonance phenomenon.

A high vibration level is damageable for piping reliability and generates high sound levels.

Mitigations methods:
1. Danfoss VZH scroll compressors are designed to produce minimal vibration during operations. To ensure minimum vibrations transmission to the structure, strictly follow mounting requirements (mounting feet, rails etc..). For further information on mounting requirements, please refer to "Design compressor mounting".

2. Ensure that there is no direct contact (without insulation) between vibrating components and structure.

3. Resonance phenomenon
To avoid resonance phenomenon, pipings and frame must have natural frequencies as far as possible from running frequencies.

This could be challenging on a variable system as all resonant frequencies between min speed to maximum speed will be exited.

It is mandatory to check that piping vibrations are acceptable across speed range. This test can be done by increasing slowly speed and monitoring piping behavior through, strain gage, acceleration, or displacement measurement. As alternative visual check with strobe light can also emphasis high piping displacement.

If some resonant frequencies generate high piping vibration, problem can be solved by increasing piping stiffness with brackets or changing layout. Dampers can also be installed to mitigate vibration.

If some frequencies continue to produce unacceptable vibration levels, speed by-pass is adjustable in the frequency converter, in order to avoid some frequency ranges. Four by-pass ranges are adjustable, and settings can be made in parameter group 4-6.

Gas pulsation

The Danfoss VZH scroll compressor has been designed and tested to ensure that gas pulsation is optimized for the most commonly encountered air conditioning pressure ratio. Manifolded compressors are equivalents to lagged sources of gas pulsation. Therefore, pulse level can vary during time.

Mitigations methods:
If an unacceptable level is identified, a discharge muffler with the appropriate resonant volume and mass can be installed.

During normal operation, refrigerant enters the compressor as a superheated vapor. Liquid flood back occurs when a part of the refrigerant entering the compressor is still in liquid state.

Liquid flood back can cause oil dilution and, in extreme situations lead to liquid slugging that can damage compression parts.

Requirement

In steady state conditions the expansion device must ensure a suction superheat within 5K to 30K (9 to 54°F).

System evaluation

Use the table in relation with the application to quickly evaluate the potential tests to perform.

Application	Tests to perform
Non reversible	Liquid flood back test
Reversible	Liquid flood back test Defrost test

Test, criteria and solutions

Test N°	Purpose	Test condition	Pass criteria	Solutions
Liquid flood back test	Steady-state	Liquid flood back testing must be carried out under expansion valve threshold operating conditions: •Lowest foreseeable evaporation, and highest foreseeable condensation. •Minimum speed running. For reversible system, perform test in both heating and cooling mode 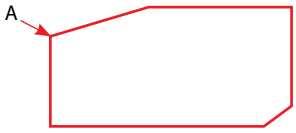 	Suction superheat >5K	1. Check expansion valve selection and setting. -For Thermostatic expansion valve (TXV) check bulb position... -For Electronic expansion valve (EXV) check measurement chain and PID.... 2. Add a suction accumulator*.
	Transient	Tests must be carried out with most unfavorable conditions : • fan staging, • compressor staging • …	Oil superheat shall not be more than 30 sec below the safe limit defined in the Dilution Chart. (see graph above)	
Defrost test	Check liquid floodback during defrost cycle	Defrost test must be carried out in the most unfavorable condition at 0°C (32°F) evaporating temperature).	Oil superheat shall not be more than 30 sec below the safe limit defined in the Dilution Chart. (see graph ablve)	1.Check defrost logic. In reversible systems, the defrost logic can be worked out to limit liquid floodback effect. (for more details see "Control Logic"). 2. Add a suction accumulator*.

*Suction accumulator offers protection by trapping the liquid refrigerant upstream from the compressor. The accumulator should be sized at least 50 % of the total system charge. Suction accumulator dimensions can impact oil return (gas velocity, oil return hole size…), therefore oil return has to be checked according to section "Manage oil in the circuit".

Dilution chart
(reference at 20°C / 68°F ambient temperature)

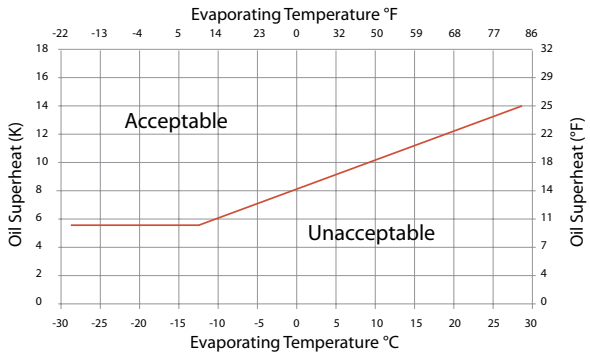

Oil temperature sensor must be placed between oil sight glass and compressor baseplate. Some thermal paste shall be used to improve the conductivity. The sensor must also be correctly thermally insulated from the ambiance.

The Oil superheat is defined as:
(Oil temperature - Evaporating temperature)

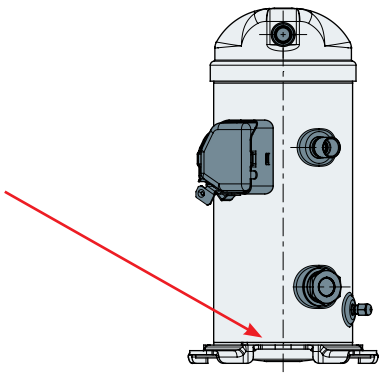

Manage off cycle migration

Off -cycle refrigerant migration happens:
• when the compressor is located at the coldest part of the installation, refrigerant vapor condenses in the compressor.
• or directly in liquid-phase by gravity or pressure difference.

When the compressor restarts, the refrigerant diluted in the oil, or stored in evaporator, generates poor lubrication conditions, and may reduce bearings life time. In extreme situations, this leads to liquid slugging that can damage the compressor scroll set.

Requirement

· Compressor can tolerate occasional flooded start, but it should remain exceptional situation and unit design must prevent that this situation from happening at each start.
· Right after start, liquid refrigerant must not flow massively to compressor.

· The charge limit is a threshold beyond with some protective measures must be taken to limit risk of liquid slugging and extreme dilution at start.

System evaluation

Use the table below in relation with the system charge and the application to quickly define necessary safeties to implement.

Application	BELOW charge limit	ABOVE charge limit
All	Ensure tightness between condenser & evaporator when system is OFF • Thermostatic expansion Valve (TXV), Liquid Line Solenoid Valve LLSV** strongly recommended • Electronic expansion valve (EXV) must close when system stops including in power shut down situation	
Non split	No test or additional safeties required	• Belt type heater* • External Non-Return Valve
Split	Since each installation is unique, refrigerant charge may vary • Belt type heater* • Liquid Line Solenoid Valve**+ pump-down cycle*** • External Non-Return Valve	

Charge limit is defined in table below:

	Models	Refrigerant charge limit (kg / lb)
Single	VZH052-065	5.4 / 12

*Crankcase heater
The belt crankcase heaters are designed to protect the compressor against off-cycle migration of refrigerant.
Additional heater power or thermal insulation might be needed in case of ambient temperature below -5°C (23°F) and a wind speed above 5m/second (16.4 feet/second).
The heater must be turned on whenever all the compressors are off.
Cranckcase heater accessories are available from Danfoss (see section "Accessories").

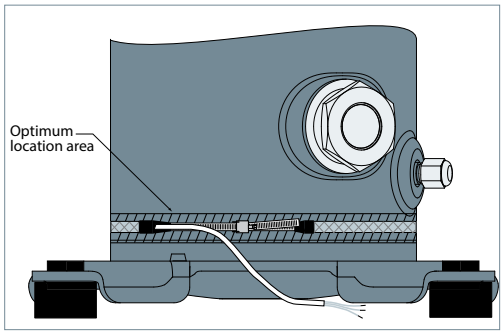

**Liquid line solenoid valve (LLSV)
A LLSV is used to isolate the liquid charge on the condenser side, thereby preventing against charge transfer to the compressor during off -cycles. The quantity of refrigerant on the low-pressure side of the system can be further reduced by using a pump-down cycle in association with the LLSV.

***Pump-down cycle
By decreasing pressure in the sump, pump down:
• Evacuates refrigerant from oil
• Set the sump saturating pressure much lower than ambiance temperature and due to that, avoid refrigerant condensation in the compressor.
• Pump-down must be set higher than 1.8 bar(g) / 26 psig.

For more details on pump-down cycle see section "Control Logic".

Requirement

The operating envelope for VZH scroll compressors is given in the figures below and guarantees reliable operations of the compressor for steady-state operation.

Moreover, the discharge gas temperature must not exceed 135°C (275°F). Steady-state operation envelope is valid for a suction superheat within 5K to 30K (9°F to 54°F) range.

Single envelope control

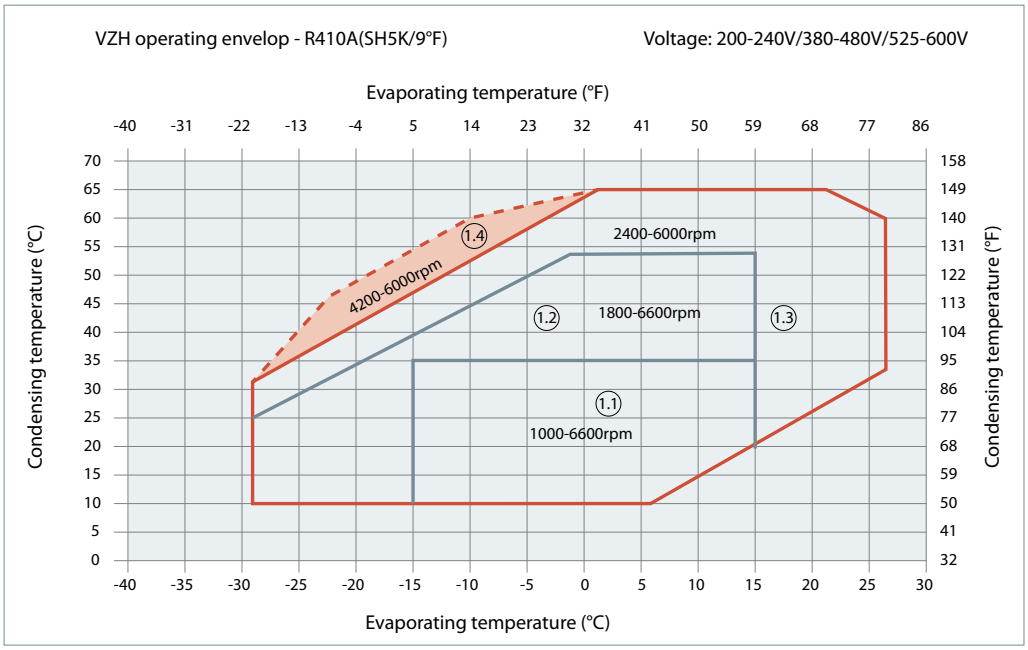

Note:
zone1.1/1.2/1.3: reliable running, compressor discharge temperature will not exceed 135°C (275°F) with suction superheat within 5K to 30K (9°F to 54°F) range
zone 1.4: Restricted area, compressor discharge temperature may go beyond 135°C (275°F) depending on superheat and speed. Operation in this area is allowed if discharge temperature is below 135°C (275°F).

Pressure settings		R410A
Working range high side	bar(g) psig	9.9-41.1 144-596
Working range low side	bar(g) psig	1.8-16.6 26-241
Maximum high pressure safety switch setting*	bar(g) psig	43.7 634
Minimum low pressure safety switch setting	bar(g) psig	1.5 22
Minimum low pressure pump-down switch setting	bar(g) psig	1.5 bar below nominal evap. pressure with minimum of 1.8 bar(g) 22 psi below nominal evap. pressure with minimum of 26psig

*Maximum allowable pressure on high pressure side according to PED regulation.

System evaluation

VZH drive can only protect the compressor from over current. To manage operating envelop, an advanced envelope protection principle needs to be used with variable speed compressors. This solution offers much better protection than basic protection, and also offers the possibility to adjust running conditions to avoid tripping (for example reduce compressor speed when reaching high pressure limit).

The advanced protection principle is based on a permanent measurement of suction and discharge pressure. Unit controller is permanently checking that the compressor is running within the defined envelope.

When compressor reach a limit, controller can act on different parameter to avoid unit tripping.

On top of suction and discharge pressure limitations, the discharge T° must remain below 135°C (275°F).

Low pressure switch and high pressure switch remain necessary as an ultimate protection.

The whole envelope can be used on the whole speed range, see "Single application envelope"

Depending on speed range needed, two types of controls to be considered

- Speed range limited from 2400RPM to 6000RPM
- Full speed range from 1000RPM to 6000RPM

Single envelope control: Limit speed range from 2400 to 6000RPM

Controller do not need to manage speed limitation according to operating conditions.

Operation is allowed in area 1.1; 1.2 ; 1.3.

Protection required
- HP switch*
- LP switch*
- DGT set @ 135°C (275°F) if necessary see "Discharge T° protection"

- Measurements of suction and discharge pressure, unit controller with is permanently maintaining compressor within its envelope.

- drive setting:
parameter 4-11[Motor speed low limit(rpm)]:
set value as 2400

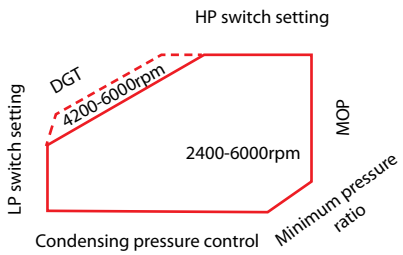

Multiple envelope control: Speed range <2400 allowed

Controller needs to manage speed limitation according to operating conditions.
1000RPM to 1800RPM is allowed in area 1.1
1800RPM to 2400RPM is allowed in area 1.1 and 1.2

2400RPM to 6000RPM is allowed in area 1.1; 1.2 and 1.3
4200RPM to 6000RPM is allowed in all area
Below 2400RPM oil boost function is enabled by default (more details **"Oil management logic"**)

Protection required
• HP switch*
• LP switch*
• DGT set @ 135°C (275°F) if necessary
see §Discharge T° protection

•Measurements of suction and discharge pressure, unit controller is permanently maintaining compressor within its envelope **with right minimum speed**

•drive setting:
parameter 4-11[Motor speed low limit(rpm)]: keep default value as 1000

See "Test, criteria and solutions"

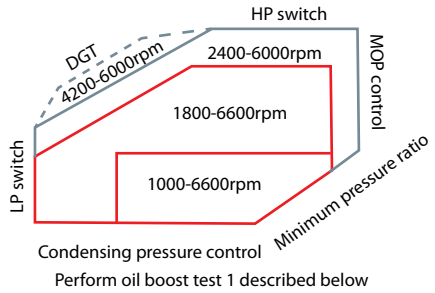

*for more details see "Control Logic"

Test N°	Purpose	Test condition	Pass criteria	Solutions
1	Check reaction of system to oil boost	Stabilized the system in area below minimum speed (2400RPM) until oil boost happen	No unsafties happen Superheat requirement fullfilled	Modify ramp-up Modify superheat control

Discharge temperature protection

For VZH052-065 compressors, the external Discharge Gas Temperature protection (DGT) is required in zone 1.4 or if the high and low pressure switch settings do not protect the compressor against operation beyond its specific application envelope. Please refer to the examples below, which illustrate where DGT protection is required (Ex. 1) and where it is not (Ex. 2). Please notice the envelope boundaries change based on different speed limits.

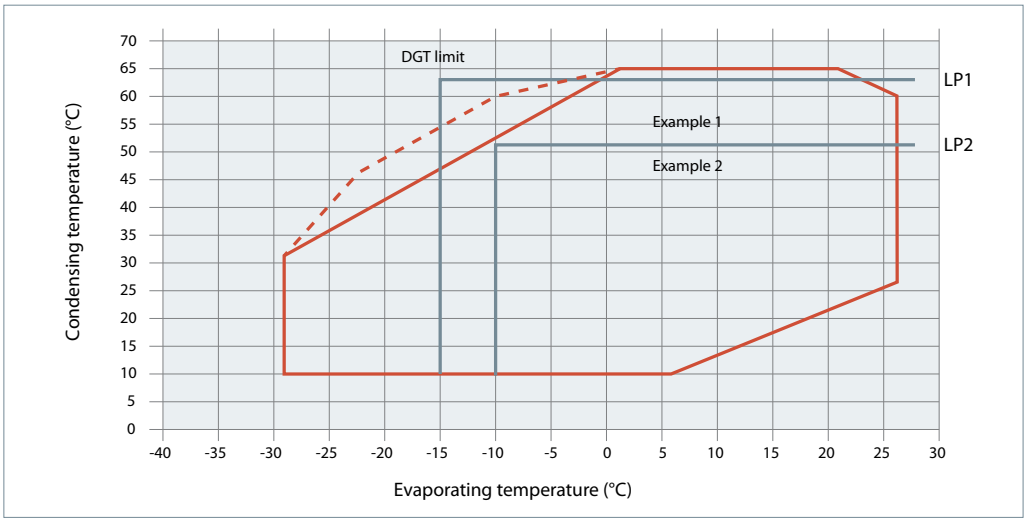

Example 1 (R410A, SH = 6K / 10.8°F)
LP switch setting:
LP1 = 3.3 bar (g) / 48 psig (-15.5°C / 4.1°F)
HP switch setting:
HP1 = 38 bar (g) / 551 psig (62°C / 143.6°F)
Risk of operation beyond the application envelope.
DGT protection required.

Example 2 (R410A, SH = 6 K / 10.8°F)
LP switch setting:
LP2 = 4.6 bar (g) / 67 psig (-10.5°C / 13.1°F)
HP switch setting:
HP2 = 31 bar (g) / 450 psig (52°C / 125.6°F)
No risk of operation beyond the application envelope.

A discharge gas temperature protection device must be installed on all heat pumps. In reversible air-to-air and air-to-water heat pumps, the discharge temperature must be monitored during development test by the equipment manufacturer.

The compressor must not be allowed to cycle on the discharge gas thermostat. Continuous operations beyond the compressor's operating range will cause serious damage to the compressor.

The discharge gas thermostat accessory kit (code 7750009) includes all components required for installation as shown on the right. DGT installation must respect below requirements:

- The thermostat must be attached to the discharge line within 150 mm (5.91 inch) from the compressor discharge port and must be thermally insulated and tightly fixed on the pipe.
- The DGT should be set to open at a discharge gas temperature of 135°C (275°F) or lower.

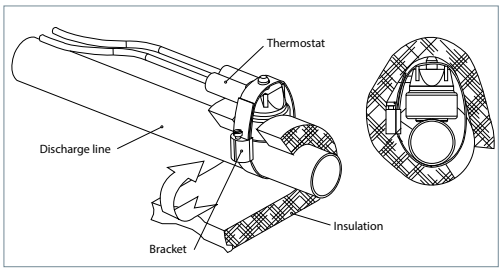

MOP (Max operating pressure) control	In steady state, it is essential to prevent the compressor running when evaporating T° is higher than the specified envelope. Operating the compressor higher than maximum evaporating temperature will cause low viscosity of lubricant and lead to high dilution. Eventually the compressor will get damaged. This protection can be achieved by using MOP function on expansion device. MOP is a feature added to EXV's (also to TXV's) that limit the maximum suction pressure of the unit. The customer would need to set this at the 27°C	(80.6°F) limit we have on our VS operating envelope. Regardless of EXV or TXV, customer needs to qualify the expansion device. Testing needs to be done at both max and min operating conditions to guarantee the valve closes enough on the min and opens far enough on the max. Complementary to MOP, the unit controller can increase compressor speed to keep evaporating T° lower than limit.
Condensing pressure control	In steady state, the condensing T° must be maintained at a T° within envelope. This can be done by using fan speed controller, or constant pressure valve. Keep condensing pressure at a minimum level is also important to maintain the pressure differential across the thermostatic expansion valve and prevent cut out on the LP	protection in cold ambient. As an alternative the unit controller can increase compressor speed to keep condensing T° lower than limit.
Minimum pressure ratio	In steady state, the pressure ratio must be a T° within envelope. 2 type of control can be considered: • Set the minimum condensing T° at 30°C (86°F) together with MOP set at 27°C (80.6°F).	• Unit controller monitors permanently Condensing and Evaporating T°, and adjust compressor speed or condensing T° to keep running conditions within envelope.

Speed limit requirement

R Speed limit guarantees compressor reliability and must be respected. In drive control logic, default setting values have been qualified by Danfoss. Customer could change the default values if the changes have been qualified by OEM.

Start/Stop/Ramp setting

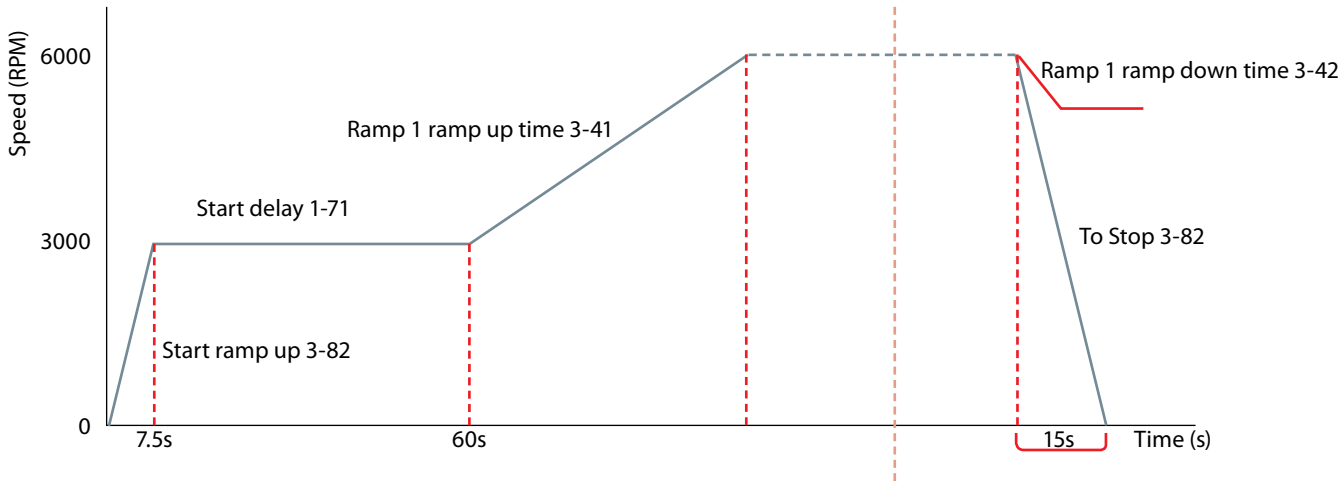

Drive parameter		Description	Default value (s)
1-71	Start delay	keep running @ 3000 RPM within a certain duration	60
3-41	Ramp 1 ramp up time	It is used to define speed ramp up slope. Speed ramp up slope is defined under condition that increases compressor speed from 0 rpm to 6000 rpm in a certain period(s, ramp1 ramp up time) Eg: if current speed is 3000rpm and desired speed is 4000rpm, then compressor will reach 4000 rpm in 15s	90
3-42	Ramp 1 ramp down time	It is used to define speed ramp down slope. Speed ramp down slope is defined under condition that decreases compressor speed from 6000 rpm to 0rpm in a certain period (s, ramp1 ramp down time) Eg: if current speed is 4000rpm and desired speed is 3000rpm, then compressor will reach 3000 rpm in 5s	30

Safety control logic requirements

	Tripping conditions		Re-start conditions	
	Value	Time	Value	Time
HP switch	See Pressure settings table from section "Manage operating envelope"	Immediate, no delay. No by- pass	Conditions back to normal. Switch closed again	Manual reset
LP safety switch				Maximum 5 auto reset during a period of 12 hours, then manual reset.

High pressure

According to EN378-2, a high-pressure (HP) safety switch is required to shut down the compressor. The high-pressure switch can be set to lower values depending on the application and ambient conditions. The HP switch must either be placed in a lockout circuit or consist of a manual reset device to prevent cycling around the high-pressure limit. If a discharge valve is used, the HP switch must be connected to the service valve gauge port, which must not be isolated. The HP switch must be connected to the CDS303 input 37 or an external contactor placed before and after the drive.

Low pressure

A low-pressure (LP) safety switch must be used. Deep vacuum operations of a scroll compressor can cause internal electrical arcing and scroll instability. VZH compressors exhibit high volumetric efficiency and may draw very low vacuum levels, which could induce such a problem. The minimum low-pressure safety switch (loss-of-charge safety switch) setting is given in the following table. For systems without pump-down, the LP safety switch must either be a manual lockout device or an automatic switch wired into an electrical lockout circuit. The LP switch tolerance must not allow for vacuum operations of the compressor. LP switch settings for pump-down cycles with automatic reset are also listed in the table below. Lock-out circuit or LP switch or series with other safety devices must be connected to CDS303 input 27.

OEM need to set port 27 to "coast inverse or external interlock" to get rid of minimum running time restriction.

Electronic expansion valve

With variable capacity systems, an electronic expansion valve (EXV) is the strongly recommended solution to handle refrigerant mass flow variations. Danfoss recommends the use of ETS products. Ramp-up and ramp-down settings, of both EXV and compressor, must be done with great care.

Ramp-up of the EXV must be shorter than the ramp-up of the compressor, to avoid any low pressure operation on suction side of the compressor. The EXV can also be opened, up to a certain degree, before the start up of the compressor.

Ramp-down of the EXV must be longer than the ramp-down of the compressor, also to avoid low pressure operation (except with pump-down).

EXV should be closed, and remain closed, when the compressor is off, to avoid any liquid refrigerant entering the compressor.

Reverse rotation protection

Due to drive protection, compressors could work properly even if the power connection between the drive and mains is dis-matched. However, the wires between compressor and drive must be connected accordingly. To protect compressors from reverse rotation, pressure difference could be checked as a reference value. Use pressure sensors to monitor pressure difference between discharge and suction of the compressor, and for normal operation, discharge pressure should be at least 1 bar higher than suction pressure within 30 s running after compressor starting.

Short cycle protection

Short cycling protection requirements need to be implemented in OEM unit controller:

Meantime, the factory default setting needs to be disabled(28-00 short cycle protection change from default setting "enable" to "disable").

- 3 minutes minimum running time: in order to get oil return back from circuit to compressor sump

- 12 starts maximum per hour: to avoid threaten the life time of motor and other mechanics due to frequent starts, OEM needs to limit the starts cycles within 12 times per hour.

- 10s minimum OFF time: to make sure discharge valve is closed and motor is stopped before next start, OEM needs to set the minimum off time as 10 seconds.

Defrost cycle logic

In reversible systems, the defrost logic can be worked out to limit liquid flood back effect by:
1. Running full load during defrost to share liquid refrigerant between all compressors.
2. Transferring liquid refrigerant from one exchanger to the other one thanks to pressures.

The following defrost logic combines both advantages:

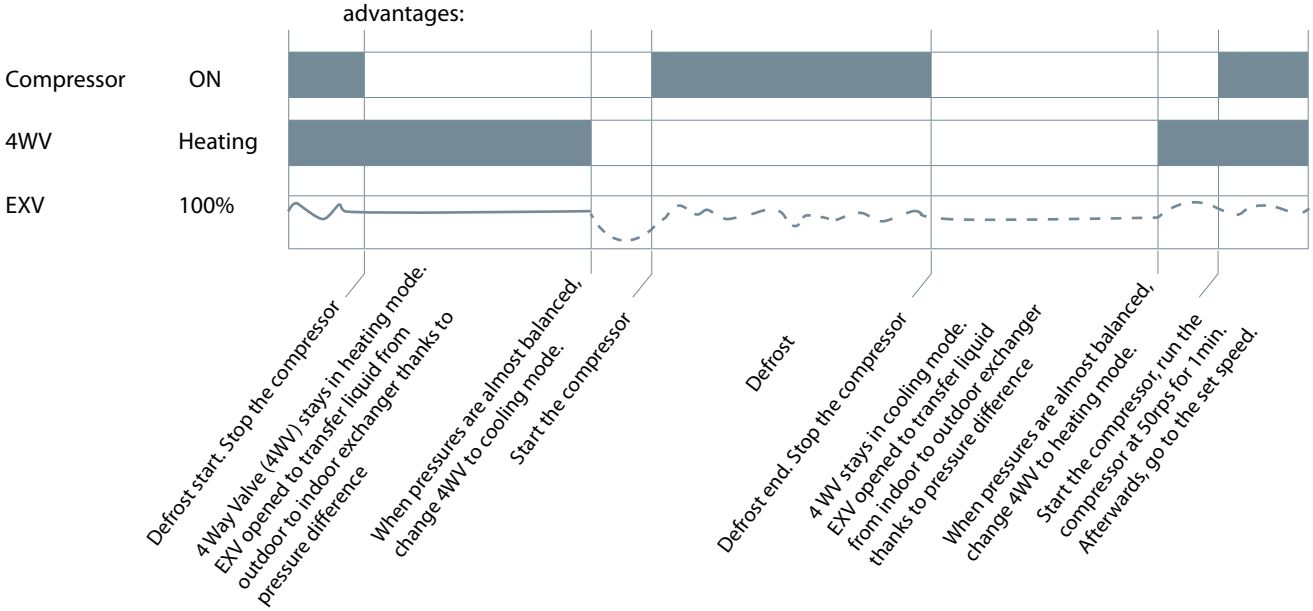

* EXV Opening degree and time have to be set to keep a minimum pressure for 4 way valve moving.

Danfoss recommend above defrost cycle logic, but the control logic is also system specified.

In any case, defrost logics must respect requirements and tests described in "Manage superheat" and "Manage operating envelope".

Pump-down logic recommendations

Pump down is initiated prior to shutting down the last compressor on the circuit by de-energizing a liquid line solenoid valve or closing electronic expansion valve. When suction pressure reaches the cut-out pressure, compressor is stopped, and liquid solenoid valve or electronic expansion valve remains closed. Two types of pump-down exist:

- One shot pump down (preferred): when last compressor of the circuit stops, suction presssure is decreased 1.5 bar below nominal evaporating pressure. Even if suction pressure increases again, the compressor will not restart.
- Continuous pump-down: traditional pump-dow, Compressor restarts automatically when suction pressure increases up to 4 cycles maximum. A non-return valve in the discharge line is recommended.

Oil management logic

CDS303 integrates oil return management(ORM) function together with compressor oil boost function.

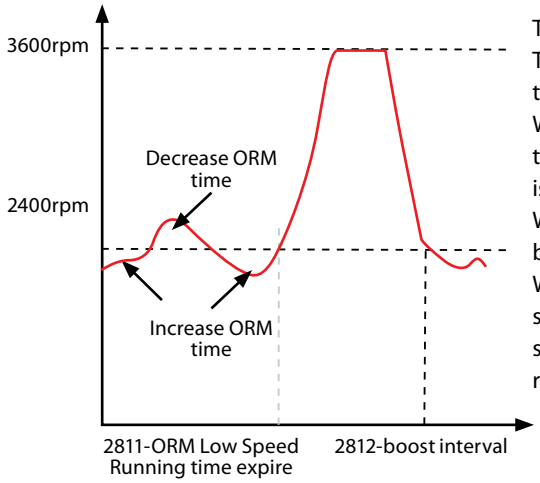

This function uses a timer.
The timer is set at parameter low speed running time 28.11, 120min.
When actual compressor speed is below 40rps, the timer is increasing. When compressor speed is above 40rps timer is decreasing.
When time counter reaches 120min the oil return boost is started.
When the boost is terminated, the compressor speed goes back to run on reference (speed setpoint) and the time counter is reset and restarting from zero.

•Oil boost function: If compressor runs below 2400 rpm for more than 120 minutes (low speed running time, 28-11), in case oil get trapped in system and compressor inner part cannot get lubricated, CDS303 oil boost function will accelerate compressor speed to 3600 rpm for 1 minute (minimum duration, includes ramp up time, 28-13) to take the oil back from system. In case of slow acceleration condition, please make sure compressor maintain minimum speed 3600rpm for at least 1 minute running.

* Please note for oil boost function, it is enabled by parameter 28-10 as default setting. Please notice when hands on mode is selected, oil return management will not work even if parameter 28-10 (oil return management) is set to on. During hands on mode, if compressor runs below 2400rpm for more than 120 minutes, oil return fault alarm (A208) will report on LCP and stop the compressor. Please select hands on mode carefully and only select hands on mode if the OEM has implemented oil return management in the system controller and qualified oil management. Under such conditions, the compressor could run below 2400rpm continually and meanwhile drive oil return management 28-10 will get by passed..

•Oil return function: To double ensure oil return from system, compressor speed will boost to 3600 rpm at a fixed time intervals (as programmed in parameter 28-12, default 24 hrs) any way.

ID	Name	Factory Setup	Unit	Customer Access
2810	Oil Return Management	Enable		R/W
2811	Low Speed Running Time	120	min	R/W
2812	Fixed Boost Interval	24	h	R/W
2813	Boost Duration	60	s	R/W

Oil management related parameters, 28-11, 28-12, 28-13 could also be programmed by OEM.

Considering oil return risk, a split system with more than 10 m piping length requires mandatory application approval by Danfoss application specialists.

	Excessive air and moisture • can increase condensing pressure and cause excessively high discharge temperatures. • can create acid giving rise to copper platting. • can destroy the lubricating properties of the oil.	All these phenomena can reduce service life and cause mechanical and electrical compressor failure.
Requirements	VZH compressors are delivered with < 100 ppm moisture level. At the time of commissioning, system moisture content may be up to 100 ppm.	During operation, the filter drier must reduce this to a level between 20 and 50 ppm.
Solutions	To achieve this requirement, a properly sized and type of drier is required. Important selection criteria's include: • driers water content capacity, • system refrigeration capacity, • system refrigerant charge.	For new installations with VZH compressors with PVE oil, Danfoss recommends using the Danfoss DML (100% molecular sieve) solid core filter drier.

Compressor storage

- Store the compressor where is not exposed to rain, corrosive or flammable atmosphere.

- Store the compressor between -35°C and 70°C (-31°F and 158°F) when it is charged with nitrogen.

- Store the compressor between -35°C and 55°C (-31°F and 131°F) when it is charged with R410A refrigerant.

Compressor holding charge

Each compressor is shipped with a nominal dry nitrogen holding charge between 0.3 and 0.7 bar (4 psi and 10 psi) and is sealed with elastomer plugs.

⚠ Respect the following sequence:

- Remove the nitrogen holding charge via the suction Schrader valve to avoid an oil mist blow out.
- Remove the suction plug first and the discharge plug afterwards to avoid discharge check valve gets stuck in open position.

An opened compressor must not be exposed to air for more than 20 minutes to avoid moisture is captured by the PVE oil.

Handling

⚠ Each Danfoss VZH scroll compressor is equipped with one lift ring on the top shell.

- Always use one lift ring and discharge tube when lifting the compressor.
- Use lifting equipment rated and certified for the weight of the compressor or compressor assembly.
- A spreader bar rated for the weight of the compressor is highly recommended to ensure a better load distribution.
- The use of lifting hooks closed with a clasp is recommended.
- Never use the lift rings on the compressor to lift the full unit.

Maintain the compressor in an upright position during all handling manoeuvres (maximum of 15° from vertical).

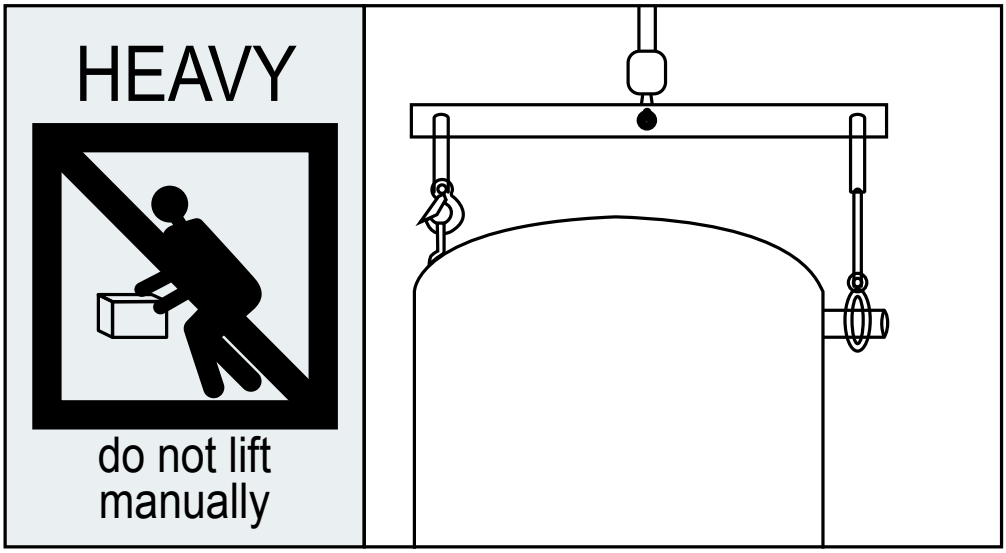

Piping assembly

Good practices for piping assembly is a pre-requisite to ensure compressor service life (system cleanliness, brazing procedure...)

System cleanliness

Circuit contamination possible cause	Requirement
Brazing and welding oxides	During brazing, flow nitrogen through the system
Filings and particles from the removal of burrs in pipe-work	Remove any particles and burrs generated by tube cutting and hole drilling
Moisture and air	Use only clean and dehydrated refrigeration grade copper tubing Opened compressor must not be exposed to air more than 20 minutes to avoid moisture captured by PVE oil.

Brazing procedure:
- Brazing operations must be performed by qualified personnel.
- Make sure that no electrical wiring is connected to the compressor.
- To prevent compressor shell and electrical box overheating, use a heat shield and/or a heat-absorbent compound.
- Clean up connections with degreasing agent
- Flow nitrogen through the compressor.
- Use flux in paste or flux coated brazing rod.
- Use brazing rod with a minimum of 5% silver content.
- It is recommended to use double-tipped torch using acetylene to ensure a uniform heating of connection.
- To enhance the resistance to rust, a varnish on the connection is recommended.

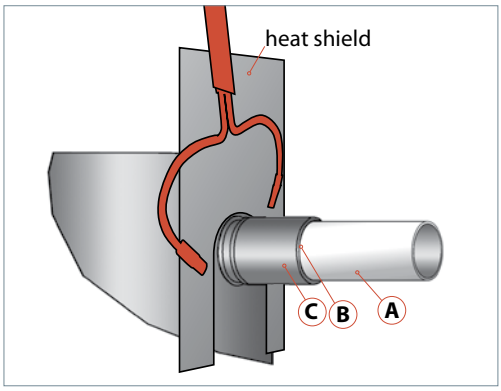

⚠ Before eventual un-brazing of the compressor or any system component, the refrigerant charge must be removed.

System pressure test and leak detection

⚠ The compressor has been strength tested and leak proof tested (<3g/year) at the factory.
For system tests:
- Always use an inert gas such as Nitrogen or Helium.
- Pressurize the system on HP side first then LP side.
- Do not exceed the following pressures:

Maximum compressor test pressures	
Maximum compressor test pressure high side (HP)	41.1 bar (g) / 596 psig HP-LP<36bar / 522 psi
Maximum compressor test pressure low side (LP)	33.3 bar (g) / 483 psig LP-HP<5bar / 73 psi Maximum speed 4,8 bar/ second (70 psi/s)*

* If an external non return valve is present on the discharge line, maximum pressurizing speed must be respected to ensure pressure equalization between LP and HP side over scroll elements.

Vacuum evacuation and moisture removal

Requirements:
- Never use the compressor to evacuate the system.
- Connect a vacuum pump to both the LP and HP sides.
- Evacuate the system to a pressure of 500 µm Hg (0.67 mbar / 0.02 in.Hg) absolute.

Recommendations:
- Energized heaters improve moisture removal.
- Alternate vacuum phases and break vacuum. with Nitrogen to improve moisture removal.

For more detailed information see "Vacuum pump-down and dehydration procedure" TI-026-0302.

Refrigerant charging

Initial charge:
- For the initial charge, the compressor must not run.
- Charge refrigerant as close as possible to the nominal system charge.
- This initial charging operation must be done in liquid phase between the condenser outlet and the filter drier.

If needed, a complement of charge can be done:
- In liquid phase while compressor is running by slowly throttling liquid in.
- Never bypass safety low pressure switch.

For more detailed information see "Recommended refrigerant system charging practice" FRCC.EN.050.

Dielectric strength and insulation resistance tests

The tests are performed on each compressor at the factory between each phase and ground.

- Carry out a dielectric strength test by short-circuiting terminals L1, L2 and L3. Energize by max. 1920 V DC(hi-pot) for code G compressors and 1460 V DC(hi-pot) for code J compressors for one second between this short-circuit and the chassis, and leakage current must be less than 5 mA. When running dielectric strength tests of the entire installation, frequency converter and compressor electrical motor compressor test can be conducted together. When conducting a dielectric strength test, make sure the system is not under vacuum: this may cause electrical motor compressor failure.

Do not use a megohm meter nor apply power to the compressor while it is under vacuum as this may cause internal damage.

Please note, it is not recommended that a dielectric strength test be carried out too often as it may damage the motor. Nevertheless, if such a test is necessary, it must be performed at a lower voltage.
- Insulation resistance is measured with a 500 V DC megohm tester and must be higher than 1 megohm.
- The presence of refrigerant around the motor windings will result in lower resistance values to ground and higher leakage current readings. Such readings do not indicate a faulty compressor. To prevent this, the system can be first operated briefly to distribute refrigerant.

Preliminary check

Check electrical power supply:

- Phase order: Reverse rotation is obvious if the compressor do not build up pressure and sound level is abnormal high. VZH compressor will only operate properly in one direction. If electrical connections are done correctly between the drive and the compressor terminals (compressor terminals T1,T2,T3 and drive terminals U, V & W matching), the drive will provide correct phase supply to the compressor, and reverse rotation will be not possible:For more details refer to "Motor protection".
- Voltage and voltage unbalance within tolerance: For more details refer to section "Motor voltage".

Initial start-up

- Cranckcase heaters must be energized at least 6 hours in advance to remove refrigerant.
- Do not provide any power to the drive unless suction and discharge service valves on compressor are open, if installed.
- Energize the drive. The compressor must start, according to defined ramp-up settings. If the compressor does not start, check wiring conformity.
- Check the frequency converter control panel: If any alarm is displayed check the wiring and in particular the polarity of the control cables.If an alarm is shown, refer to the frequency converter application manual. Verify in particular the combination of compressor, frequency converter and refrigerant.
- Check current draw and voltage levels on the mains. The values for the compressor electrical motor can be directly displayed on the frequency converter control panel.

System monitoring

The system must be monitored after initial startup for a minimum of 60 minutes to ensure proper operating characteristics such as:

- Proper metering device operation and desired superheat readings
- Suction and discharge pressure are within acceptable levels
- Correct oil level in compressor sump indicating proper oil return
- Low foaming in sight glass and compressor sump temperature 10K (18°F) above saturation temperature to show that there is no refrigerant migration taking place
- Acceptable cycling rate of compressors, including duration of run times.

A short cycling protection is provided in the CDS frequency converter. It is factory preset "enabled" with the following parameters in:
28.01 - interval between 2 starts: 300 secondes
28.02 - minimum run time: 60 seconds.

This minimum run time is set to guaranty long enough running time at start up in order to create enough refrigerant flow velocity in the system to recover the oil to the compressor sump.

- Current draw of compressor within acceptable values (RLA ratings)
- No abnormal vibrations and noise.

Oil level checking and top-up

In installations with good oil return and line runs up to 15 m (49 feet), no additional oil is required. If installation lines exceed 15 m (49 feet), additional oil may be needed. 1 or 2% of the total system refrigerant charge (in kg) can be used to roughly define the required oil top-up quantity (in liters) but in any case the oil charge has to be adjusted based on the oil level in the compressor sight glass.

When the compressor is running under stabilized conditions, the oil level must be visible in the sight glass.

The presence of foam filling in the sight glass indicates large concentration of refrigerant in the oil and / or presence of liquid returning to the compressor.

The oil level can also be checked a few minutes after the compressor stops, the level must be between 1/4 and 3/4 of sight glass.

When the compressor is off, the level in the sight glass can be influenced by the presence of refrigerant in the oil.

Top-up the oil while the compressor is idle. Use the schrader connector or any other accessible connector on the compressor suction line and a suitable pump. See news bulletin "Lubricants filling in instructions for Danfoss Commercial Compressors" TI 2-025-0402.

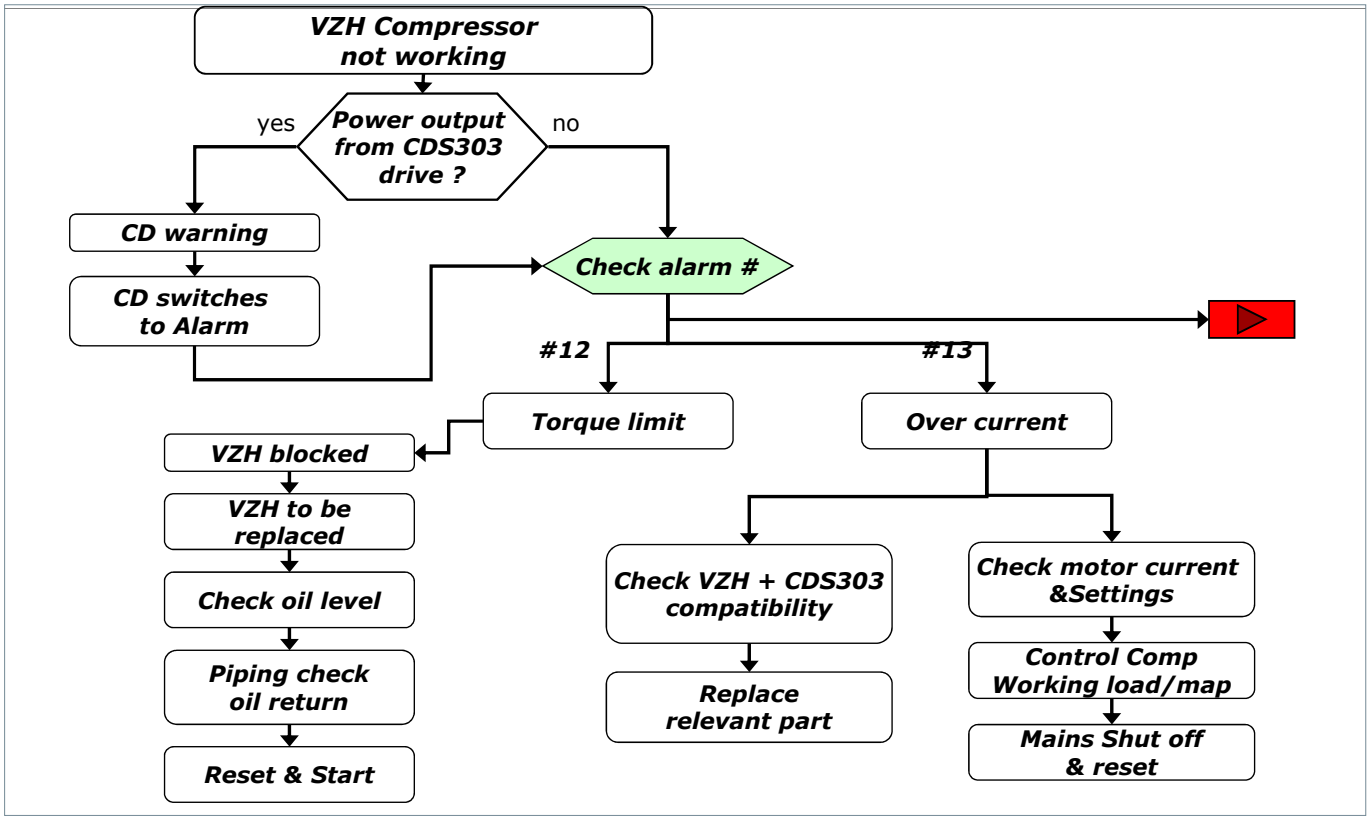
VZH Compressor not working
Power output from CDS303 drive ?
yes
no
CD warning
CD switches to Alarm
Check alarm #
#12
#13
Torque limit
Over current
VZH blocked
VZH to be replaced
Check oil level
Piping check oil return
Reset & Start
Check VZH + CDS303 compatibility
Replace relevant part
Check motor current &Settings
Control Comp Working load/map
Mains Shut off & reset

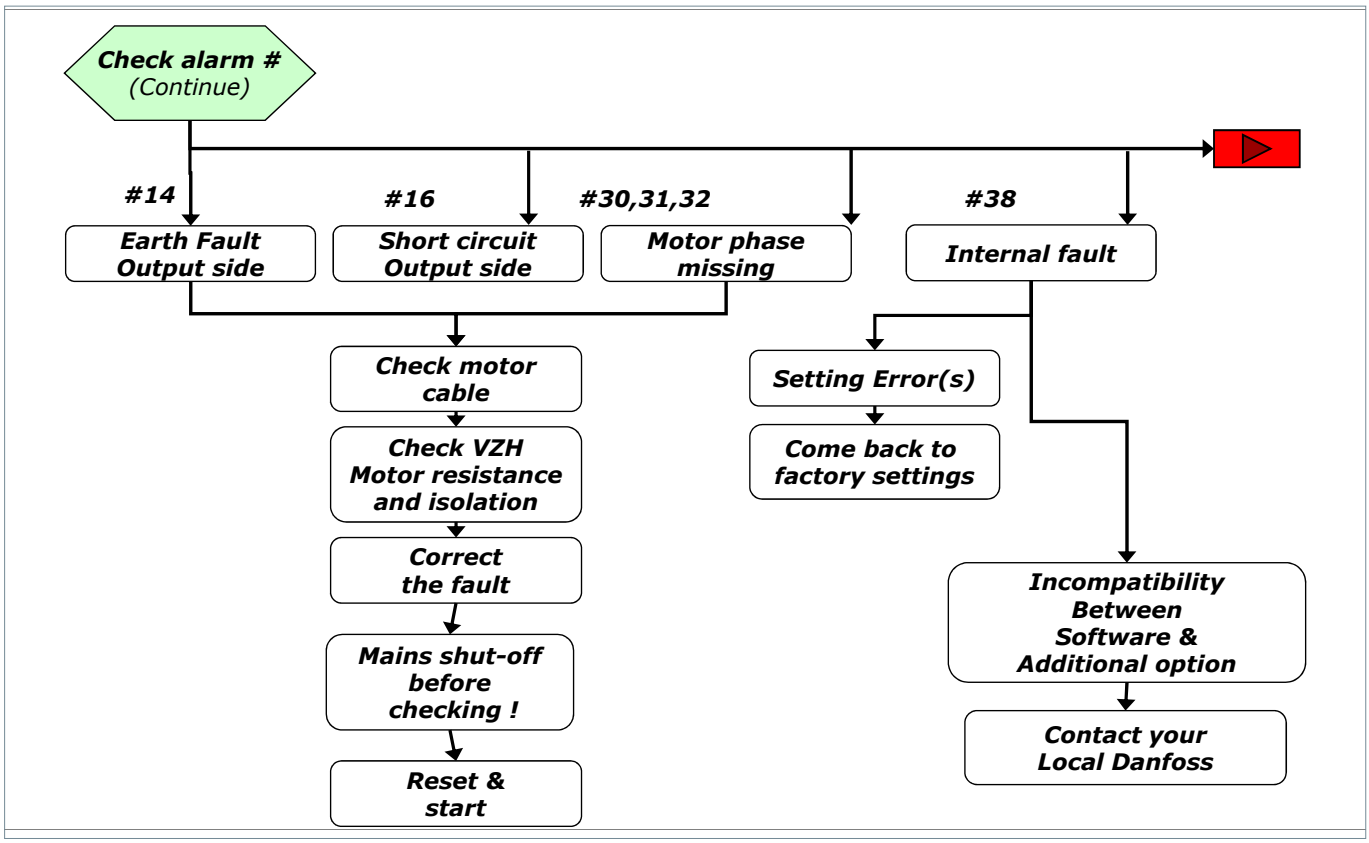
Check alarm # (Continue)
#14
#16
#30,31,32
#38
Earth Fault Output side
Short circuit Output side
Motor phase missing
Internal fault
Check motor cable
Check VZH Motor resistance and isolation
Correct the fault
Mains shut-off before checking !
Reset & start
Setting Error(s)
Come back to factory settings
Incompatibility Between Software & Additional option
Contact your Local Danfoss

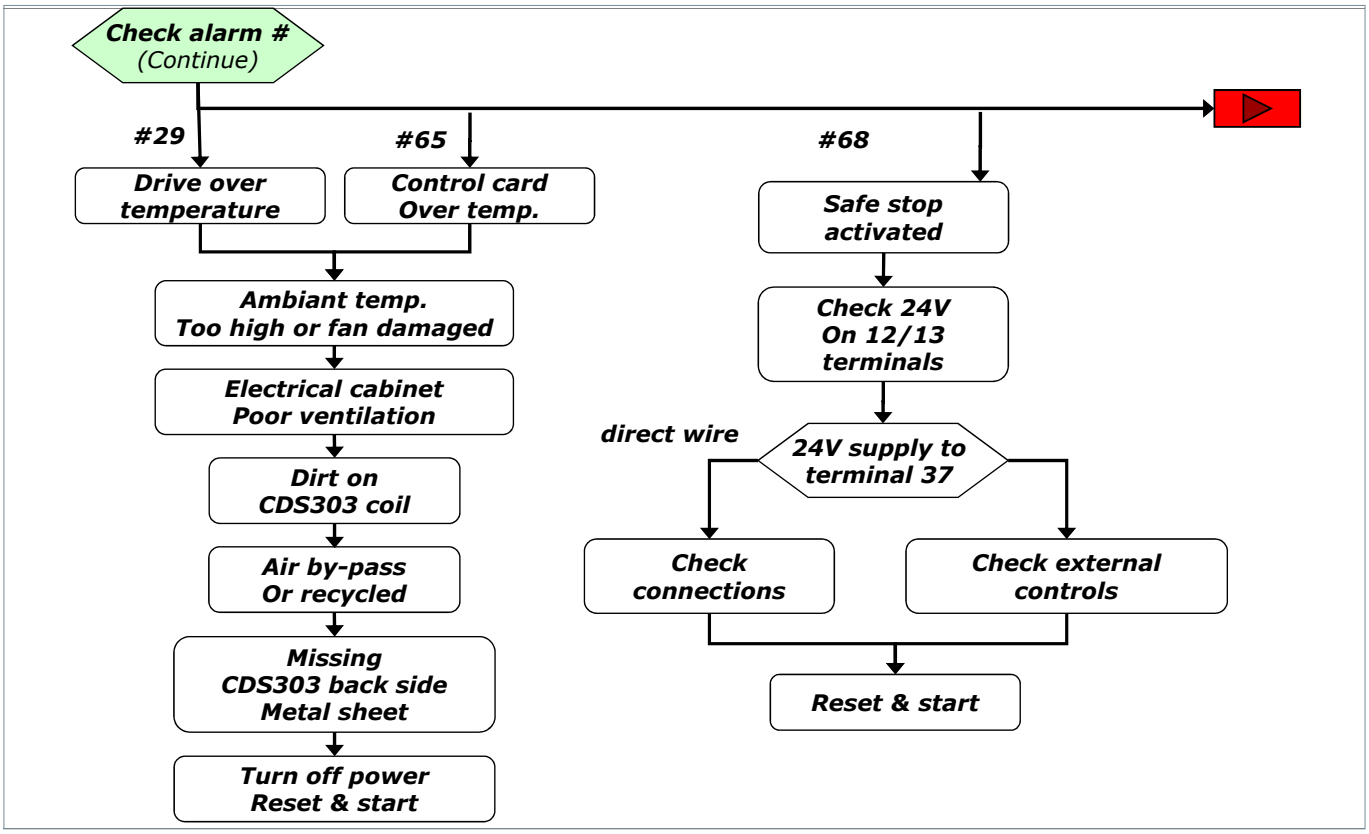
Check alarm #
(Continue)
#29
#65
#68
Drive over temperature
Control card Over temp.
Safe stop activated
Ambiant temp. Too high or fan damaged
Check 24V On 12/13 terminals
Electrical cabinet Poor ventilation
direct wire
24V supply to terminal 37
Dirt on CDS303 coil
Air by-pass Or recycled
Check connections
Check external controls
Missing CDS303 back side Metal sheet
Reset & start
Turn off power Reset & start

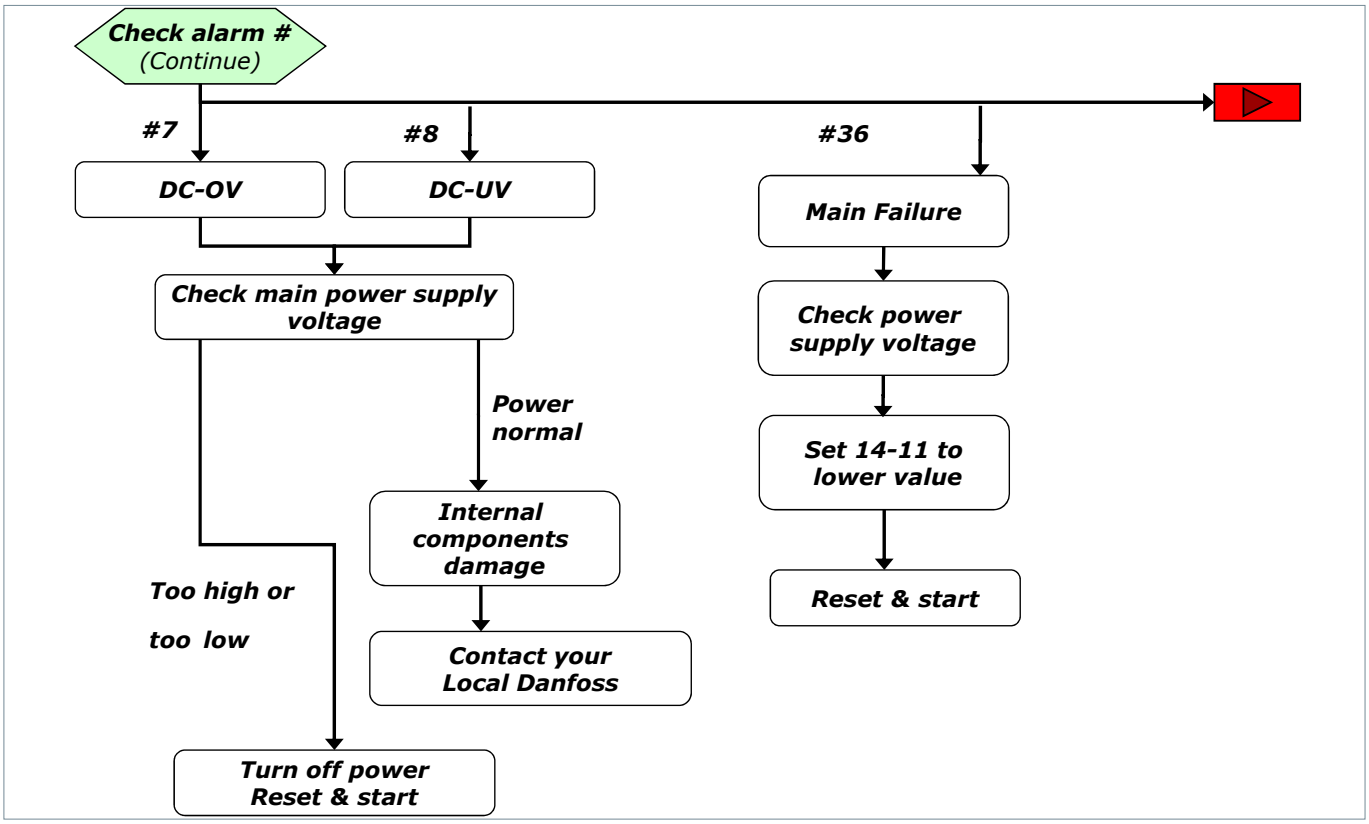
Check alarm #
(Continue)
#7
#8
#36
DC-OV
DC-UV
Main Failure
Check main power supply voltage
Check power supply voltage
Power normal
Set 14-11 to lower value
Internal components damage
Too high or too low
Reset & start
Contact your Local Danfoss
Turn off power Reset & start

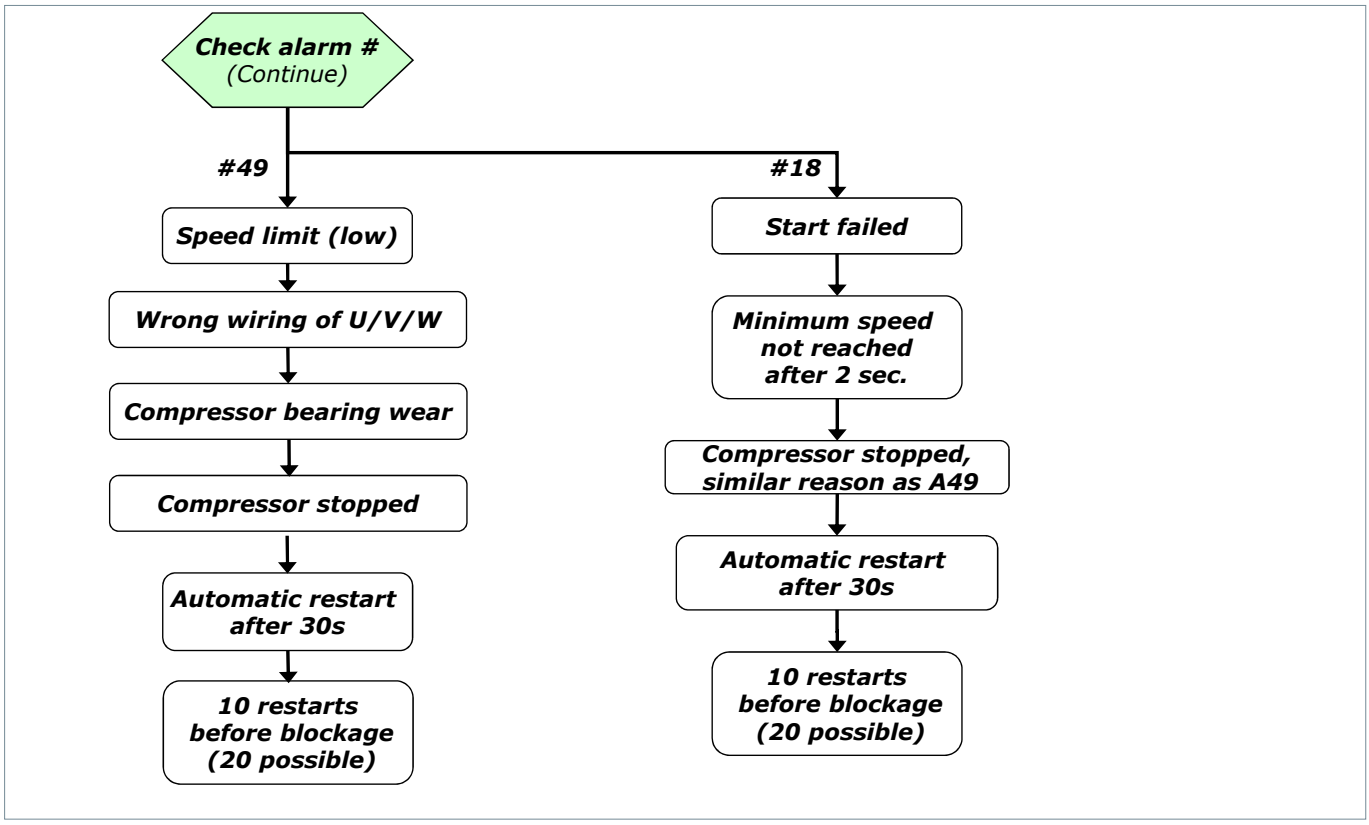
Check alarm #
(Continue)
#49
Speed limit (low)
Wrong wiring of U/V/W
Compressor bearing wear
Compressor stopped
Automatic restart after 30s
10 restarts before blockage (20 possible)
#18
Start failed
Minimum speed not reached after 2 sec.
Compressor stopped, similar reason as A49
Automatic restart after 30s
10 restarts before blockage (20 possible)

Danfoss recommends that compressors and compressor oil should be recycled by a suitable company at its site.

Single pack

Compressor single pack

Compressor model	Height		Width		Depth		Weight	
	(mm)	(inch)	(mm)	(inch)	(mm)	(inch)	(kg)	(lb)
VZH052-VZH065	524	20.6	292	11.5	286	11.3	38	84

Compressor Industrial pack

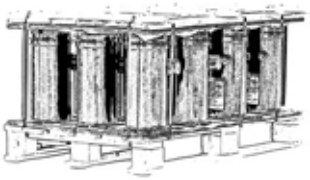

Compressors are not packed individually but are shipped all together on one pallet. They can be ordered in quantities of full pallets only, multiples of 12 compressors, according to below table.

Compressor model	Nbr*	Length		Width		Height		Gross Weight		Static stacking pallets
		(mm)	(inch)	(mm)	(inch)	(mm)	(inch)	(kg)	(lb)	
VZH052	12	1170	46.1	815	32.1	650	25.6	540	1190	3
VZH065	12	1170	46.1	815	32.1	650	25.6	540	1190	3

Frequency converter single pack

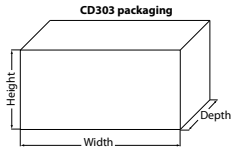

Drive supply voltage	Compressor	IP20								IP55							
		Height		Width		Depth		Weight		Height		Width		Depth		Weight	
		(mm)	(inch)	(mm)	(inch)	(mm)	(inch)	(kg)	(lb)	(mm)	(inch)	(mm)	(inch)	(mm)	(inch)	(kg)	(lb)
T2: code J	VZH052-065	346	13.6	810	31.9	320	12.6	24	53	346	13.6	810	31.9	320	12.6	28	62
T4: code G	VZH052	349	13.7	500	19.7	330	13.0	13	29	346	13.6	810	31.9	320	12.6	24	53
	VZH065	349	13.7	500	19.7	330	13.0	13	29	346	13.6	810	31.9	320	12.6	24	53
T6: code H	VZH052	349	13.7	500	19.7	330	13.0	13	29	346	13.6	810	31.9	320	12.6	24	53
	VZH065	346	13.6	810	31.9	320	12.6	24	53	346	13.6	810	31.9	320	12.6	28	62

Ordering codes

Compressor code numbers

Danfoss scroll compressors VZH can be ordered in either industrial packs or in single packs. Drive can be ordered in single packs. Please use the code numbers from below tables for ordering.

Single pack

Compressor model	Equipment version	G 380-480V/3ph/50&60Hz		J 200-240V/3ph/50&60Hz		H 525-600V/3ph/50&60Hz	
		Compressor Name	Code no	Compressor Name	Code no	Compressor Name	Code no
VZH052	Single	VZH052CGANB/M	120G0149	VZH052CJANB/M	120G0155	VZH052CHANB/M	120G0147
	Unified	VZH052CGDNB/M	120G0265	VZH052CJDNB/M	120G0267	VZH052CHDNB/M	120G0269
VZH065	Single	VZH065CGANB/M	120G0152	VZH065CJANB/M	120G0153	VZH065CHANB/M	120G0150
	Unified	VZH065CGDNB/M	120G0271	VZH065CJDNB/M	120G0273	VZH065CHDNB/M	120G0275

Industrial pack

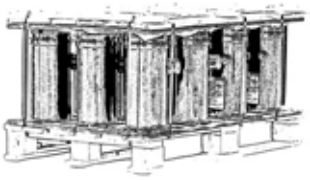

Compressor model	Equipment version	G 380-480V/3ph/50&60Hz		J 200-240V/3ph/50&60Hz		H 525-600V/3ph/50&60Hz	
		Compressor Name	Code no	Compressor Name	Code no	Compressor Name	Code no
VZH052	Single	VZH052CGANB/I	120G0143	VZH052CJANB/I	120G0142	VZH052CHANB/I	120G0141
	Unified	VZH052CGDNB/I	120G0266	VZH052CJDNB/I	120G0268	VZH052CHDNB/I	120G0270
VZH065	Single	VZH065CGANB/I	120G0146	VZH065CJANB/I	120G0145	VZH065CHANB/I	120G0144
	Unified	VZH065CGDNB/I	120G0272	VZH065CJDNB/I	120G0274	VZH065CHDNB/I	120G0276

VZH converter order information

CDS303 Drive						
Voltage	Compressor	Model & power	IP class	RFI class	Drive name	sales code
T2 200-240V/3ph/50&60Hz	VZH052/VZH065	CDS303 11kW	IP20	H2	CDS303P11KT2E20H2	135X3360
			IP20	H3	CDS303P11KT2E20H3	135X3371
			IP55	H2	CDS303P11KT2P55H2	135X3361
			IP55	H3	CDS303P11KT2P55H3	135X3372
T4 380-480V/3ph/50&60Hz	VZH052	CDS303 11kW*	IP20	H2	CDS303P11KT4E20H2	135X3298
			IP20	H3	CDS303P11KT4E20H3	135X3373
			IP55	H2	CDS303P11KT4P55H2	135X3362
			IP55	H3	CDS303P11KT4P55H3	135X3375
	VZH065	CDS303 15kW	IP20	H2	CDS303P15KT4E20H2	135X1998
			IP20	H3	CDS303P15KT4E20H3	135X3379
			IP55	H2	CDS303P15KT4P55H2	135X3369
			IP55	H3	CDS303P15KT4P55H3	135X3380
T6 525-600V/3ph/50&60Hz	VZH052	CDS303 15kW	IP20	HX	CDS303P15KT6E20HX	135X3543
			IP55	HX	CDS303P15KT6P55HX	135X4863
	VZH065	CDS303 22kW	IP20	HX	CDS303P22KT6E20HX	135X3560
			IP55	HX	CDS303P22KT6P55HX	135X3559

Variable speed compressor package VZH065 (voltage code G) + CDS303 (T4, 11kW) is qualified, to be used at drive supply voltage 380-440V (3 phase, 50/60Hz).
Any further information please contact local Danfoss engineers.

Solder sleeve adapter set

Code n°	Description	Application	Packaging	Pack size
120Z0128	Rotolock adaptor set (1-1/4" ~ 7/8") , (1-1/4" ~ 3/4")	VZH052-065	Multipack	6

Rotolock nuts and sleeves kit

Code n°	Description	Application	Packaging	Pack size
120Z5076	2 rotolock nuts 1"1/4 with sleeves and gaskets	VZH052-065	Multipack	6

Rotolock adapter

Code n°	Description	Application	Packaging	Pack size
120Z0367	Adaptor (1-1/4" ~ 7/8")	VZH052-065 suction	Multipack	10
120Z0366	Adaptor (1-1/4" ~ 3/4")	VZH052-065 discharge	Multipack	10

Mounting kits

Code No	Description	Application	Packaging	Pack Size
120Z0622	Mounting kit for 1 scroll compressors including 4 grommets, 4 sleeves, 4 bolts, 4 washers, 2 grounding screws	VZH052-065	Single pack	1

Crankcase heater

Code n°	Description	Application	Packaging	Pack size
120Z0059	Belt type crankcase heater, 65 W, 230V, CE mark, UL (Wire length: 1000 mm)	VZH052-065	Multipack	6
120Z0060	Belt type crankcase heater, 65 W, 400 V, CE mark, UL (Wire length: 1000 mm)	VZH052-065	Multipack	6
120Z5012	Belt type crankcase heater, 70W, 460V, CE mark, UL	VZH052-065	Multipack	6
120Z5013	Belt type crankcase heater, 70 W, 575V, CE mark, UL	VZH052-065	Multipack	6

Discharge thermostat kit

Code n°	Description	Application	Packaging	Pack size
7750009	Discharge thermostat kit	VZH052-065	Multipack	10
7973008	Discharge thermostat kit	VZH052-065	Industry pack	50

Accessories

Lubricant

Code n°	Description	Application	Packaging	Pack size
120Z5034	PVE lubricant, 1 litre can 320HV (FVC68D)	VZH052-065	Multipack	12

Acoustic hoods

Code No	Description	Application	Packaging	Pack Size
120Z5084	Acoustic hood for scroll compressor	VZH052-065	Single pack	1

Terminal box

Code No	Description	Application	Packaging	Pack Size
120Z5018	Square terminal box	VZH052-065	Multipack	10

Oil level switch

Type	Code n°	Description	Application	Packaging	Pack size
	120Z0560	Oil level switch screw in- mechanical part	All models	Single pack	1
	120Z0561	Oil level switch - electrical part (24V AC/DC)	All models	Single pack	1
	120Z0562	Oil level switch - electrical part (230V AC)	All models	Single pack	1

Spare parts frequency converter

LCP's

Code n°	Description	Application	Packaging	Pack size
120Z0326	LCP display	Frequency converter / all models	Single pack	1
175Z0929	RS cable to LCP	Frequency converter / all models	Single pack	1
130B0264	LCP cradle, required to mount the LCP on IP55 casings	Frequency converter / all models	Single pack	1

ENGINEERING
TOMORROW

Danfoss Commercial Compressors

is a worldwide manufacturer of compressors and condensing units for refrigeration and HVAC applications. With a wide range of high quality and innovative products we help your company to find the best possible energy efficient solution that respects the environment and reduces total life cycle costs.

We have 40 years of experience within the development of hermetic compressors which has brought us amongst the global leaders in our business, and positioned us as distinct variable speed technology specialists. Today we operate from engineering and manufacturing facilities spanning across three continents.

Danfoss Turbocor Compressors

Danfoss Inverter Scrolls

Danfoss Scrolls

Danfoss Optyma Condensing Units

Danfoss Maneurop Reciprocating Compressors

Danfoss Light Commercial Refrigeration Compressors

Our products can be found in a variety of applications such as rooftops, chillers, residential air conditioners, heatpumps, coldrooms, supermarkets, milk tank cooling and industrial cooling processes.

http://cc.danfoss.com

Danfoss Commercial Compressors, BP 331, 01603 Trévoux Cedex, France | +334 74 00 28 29

member of:
ASERCOM
www.asercom.org

AB237586440343en-000601