ENGINEERING TOMORROW

Data sheet

Valve station
ICF 15, ICF 20, ICF 25, ICF 50 and ICF 65

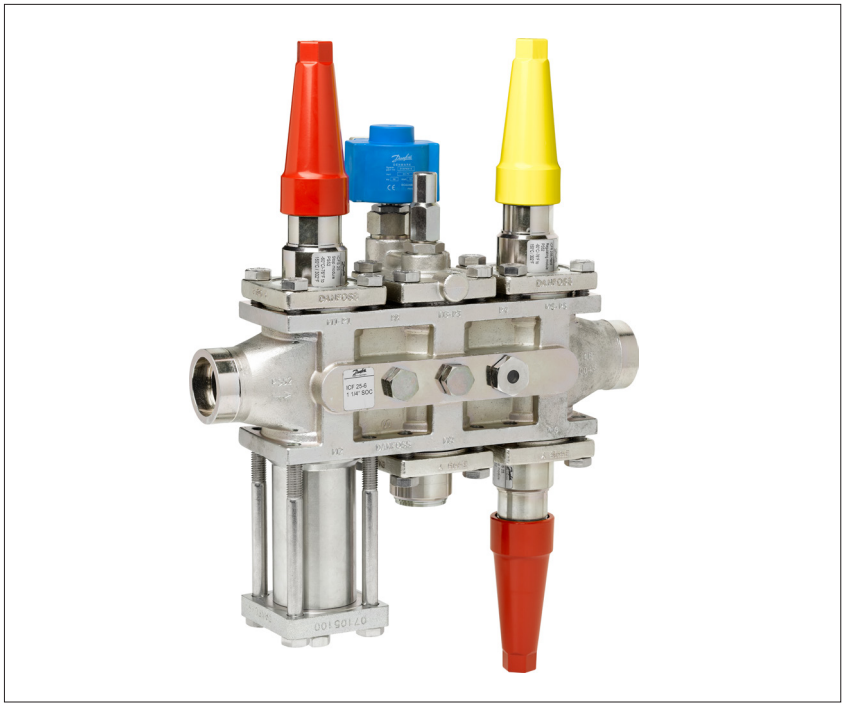

Based on advanced technology the ICF valve station incorporates several functions in one housing, which can replace a series of conventional mechanical, electro-mechanical and electronically operated valves.

This valve station not only provides a number of advantages in the design phase of a refrigeration plant but also in the installation, service and maintenance.

The ICF valve stations are designed for low and high pressure refrigerants and can be used in pumped liquid lines, liquid injection lines, liquid drain lines and hot gas lines.

Supplied as a complete assembly, it is fully tested at high pressure and its functions are tested under factory controlled conditions.

One code number equals one application solution.

Features

- Designed for industrial refrigeration applications for a maximum working pressure of 52 bar/754 psig.
  (For ICF with ICFD defrost module; see Technical Data, *Pressure*)
- Applicable to HCFC, non flammable HFC, R717 (Ammonia) and R744 (CO_2).
  The use of ICF valve stations with flammable hydrocarbons is not recommended.
- Direct weld connections
  (No leaks through flanges)
- Connection types include butt weld and socket weld.
- Low temperature steel housing.
- Low weight and compact design.
- V-port regulating cones on the control modules ensure optimum regulating accuracy particularly at part load.
- Modular Concept
  Each housing is available with several different connection types and sizes.
  Valve service is performed by replacing the function module.
- Side ports for the connection of pressure gauges, transmitters, sight glasses, service valve etc.
- UL approved

CE

ICF valve station		
Nominal bore	DN≤ 25 (1 in.)	DN 32-65 (1¼ – 2½ in.)
Classified for	Fluid group I	
Category	Article 4, paragraph 3	II

Contents **Page**

Features 1
Technical data 3
Design 3
Description of the function modules for ICF 15 and 20 7
Description of the function modules for ICF 25 8
Description of the function modules for ICF 50 and ICF 65 9
Material specification 10
Code number selection 19
Application examples 20
Connections 23
Ordering ICF valve station 24
Dimensions 41

© Danfoss | DCS (MS) | 2019.09

Technical data

- *Refrigerants*
  Applicable to HFC, R717 (Ammonia) and R744 (CO_2).
  The use of ICF valve stations with flammable hydrocarbons is not recommended.

  Exception:
  ICFD is released for ammonia and CO_2 refrigerants.
  ICFD 20 - ammonia version
  ICFD 20C - CO_2 version
  Only approved for land-based applications only.

- *Temperature range*
  ICF complete platform
  -60/+120 °C (-76/+ 248 °F)

  Exceptions:
  ICM: If the ICM module is going to be used in liquid refrigerant with a temperature above 75 °C (167 °F)please contact Danfoss.
  ICFD 20: -50/+50 °C (-58/+122 °F) at 28 bar (406 psig)
  ICFD 20C: -50/+50 °C (-58/+122 °F) at 52 bar (754 psig)

- *Ambient temperature for ICF with ICAD:*
  -30/+50 °C (-22/+122 °F)

- *Surface protection*
  The external surface is zinc-TLP treated to provide corrosion protection according to EN ISO 2081:2009
  Additional on-site corrosion protection is recommended.
- *Pressure*
  The general ICF is designed for:
  Max. working pressure: 52 bar (754 psig)

  ICFD 20 (Ammonia):
  For ICF with ICFD module the max. working pressure is 28 bar/406 psig. If the refrigeration system include ICFD 20 module, a test pressure of the system must not exceed 28 bar/406 psig, unless the ICFD float is temporarily taken out before test.

  ICFD 20C (CO_2):
  For ICF with ICFD 20C module the max. working pressure is 52 bar/754 psig. If the refrigeration system include ICFD 20 module, a test pressure of the system must not exceed 52 bar/754 psig, unless the ICFD 20C float is temporarily taken out before test.

  Max. working pressure for ICFD without float: 52 bar (754 psig).

  Maximum differential pressure:
  ICFD 20: 7 bar/102 psig
  ICFD 20C: 36 Bar/522 psig

Design

The main components of the ICF valve station are:

- A housing
- A maximum of four or six function modules (ICF 65 - max. 3)
  - In all ICF 15 the modules M1 and M2 are predefined as shut-off valve and strainer module.
  - In all ICF 50 the modules M1 and M2 are predefined as shut-off valve and blind cover (prepared for strainer).
  - In all ICF 65 the module M1 is predefined as shut-off valve

Housing

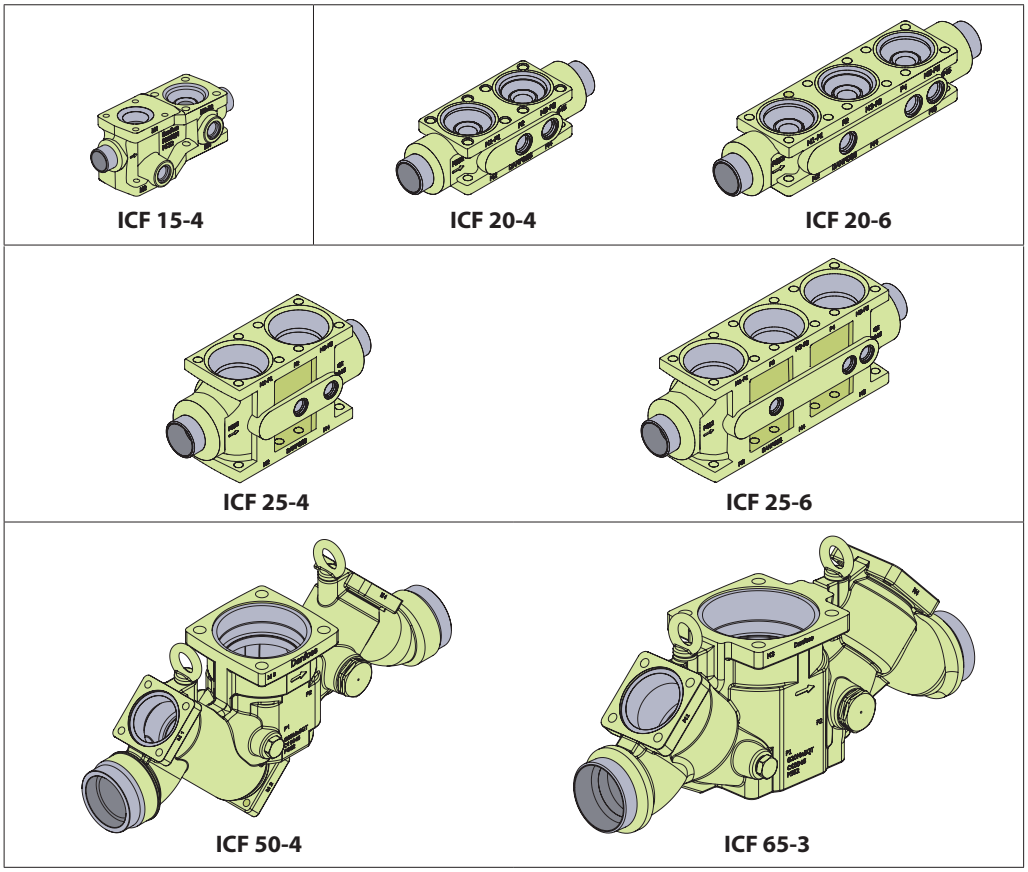

Function modules

Each housing accommodates a maximum of four or six function modules (ICF 65 max. 3), of the following types:

- Shut-off valve module
- Manual regulating valve module
- Strainer module
- Solenoid valve module
- Electronic expansion valve module
- Manual opening module
- Check valve module
- Stop & check valve module
- Pilot operated servo valve module
- Defrost drain module
- Motor operated valve module
- External welding connection module
- Blind top cover

Optional:
The housings are supplied with a predefined number of side ports for the following options:

- Sight glass
- Temperature or pressure sensor
- Pressure gauge
- Side exit for drain or bypass.

The design allows maximum capacity and minimum pressure drop, using advanced technology and double seats – offering higher capacity than conventional systems using individual valves and components.

The ICF valve station is multifunctional.

ICF valve station offers compact dimensions and shortened installation time due to the reduced number of direct welded connections.

Supplied as a complete assembly, it is leak tested at high pressure and its functions are tested under factory controlled conditions.

Connections
There is a wide range of connection types and sizes available with ICF valve stations:

- D: Butt weld, DIN (EN 10220)
- A: Butt weld, ANSI (ASME B 36.10M SCHEDULE 80)
  A: Butt weld, ANSI (ASME B 36.19 SCHEDULE 40)
- SOC: Socket weld, ANSI (B 16.11)

Approvals
The ICF concept is designed to fulfil global refrigeration requirements.
For specific approval information, please contact Danfoss.

Housing and function module material
Low temperature steel

When using TIG/MIG/SMAW welding technology, it is possible to install the ICF valve station without prior removal of the function modules from the housing. If using other welding methods the modules must be removed during welding.

Please consult the product instruction for more details.

© Danfoss | DCS (MS) | 2019.09

Module and side port arrangement

ICF 15-4

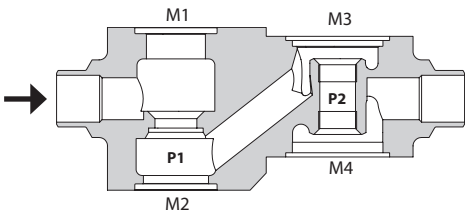

Flow in an ICF 15-4

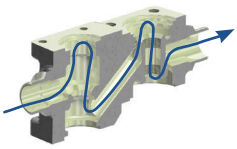

ICF 20-4, 25-4

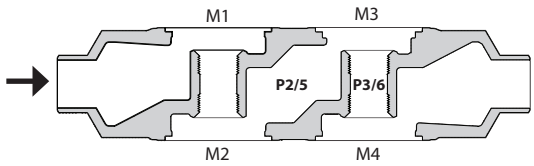

Flow in an ICF 20-4, 25-4

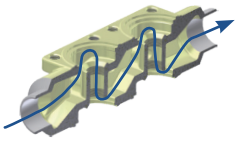

ICF 20-6, 25-6

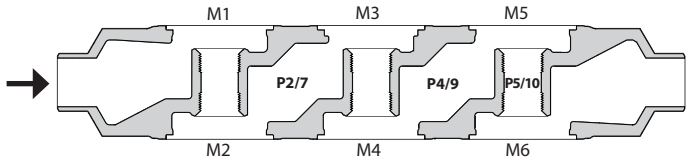

Flow in an ICF 20-6, 25-6

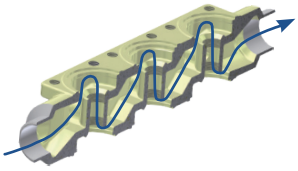

ICF 50-4

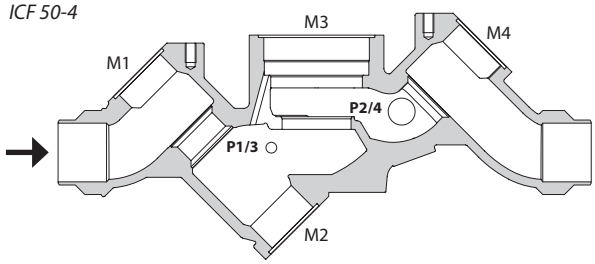

Flow in an ICF 50-4

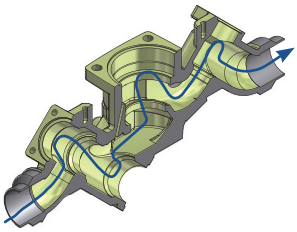

ICF 65-3

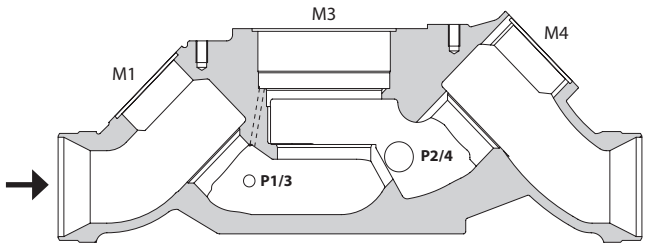

Flow in an ICF 65-3

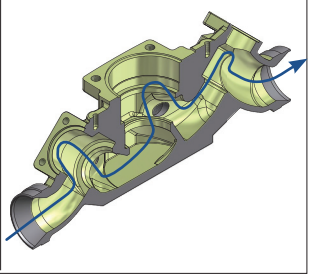

Module and side port arrangement (continued)

All ICF 15-4 DIN, ANSI and Socket connections. 2 side ports - right hand side in flow direction.

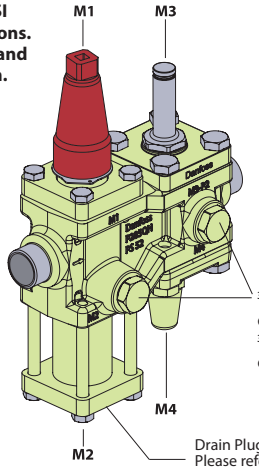

⅜ in. G for DIN and ANSI connections
⅜ in. NPT for SOC connections

Drain Plug Thread: Please refer to Material specification section page 11 - 19

Example: ICF 15-4-8 DIN

All ICF 20/25-4 DIN, ANSI and Socket connections. 4 side ports - 2 opposite on each side.

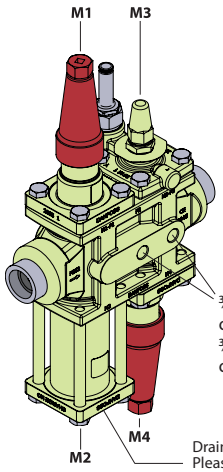

⅜ in. G for DIN and ANSI connections
⅜ in. NPT for SOC connections

Drain Plug Thread: Please refer to Material specification section page 11 - 19

Example: ICF 25-4-9 SOC

All ICF 20/25-6 DIN, ANSI and Socket connections. 6 side ports - 3 opposite on each side

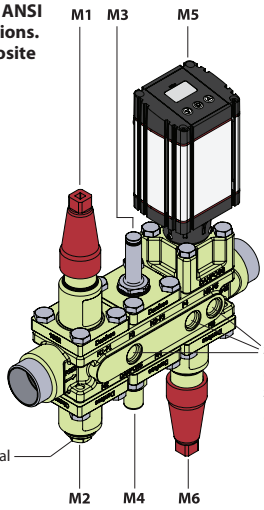

⅜ in. G for DIN and ANSI connections
⅜ in. NPT for SOC connections

Drain Plug Thread: Please refer to Material specification section page 11 - 19

Example: ICF 20-6-5MB DIN

All ICF 20/25-6 DIN, ANSI and Socket connections. 6 side ports - 3 opposite on each side.

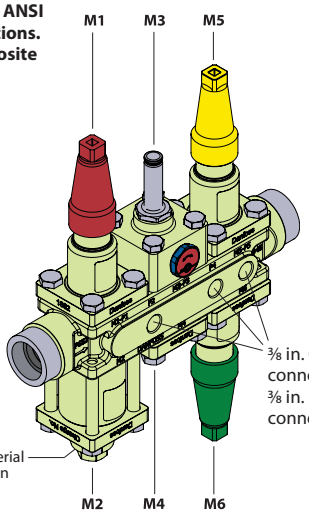

⅜ in. G for DIN and ANSI connections
⅜ in. NPT for SOC connections

Drain Plug Thread: Please refer to Material specification section page 11 - 19

Example: ICF 20-6-2HRB SOC

All ICF 50-4 DIN, ANSI and Socket connections. 4 side ports - 2 opposite on each side

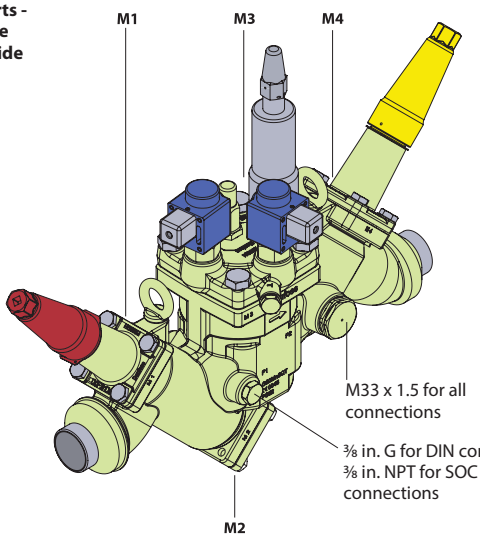

M33 x 1.5 for all connections

⅜ in. G for DIN connections
⅜ in. NPT for SOC connections

Example: ICF 50-4-42S50 SOC

All ICF 65-3 DIN and ANSI connections. 4 side ports - 2 opposite on each side

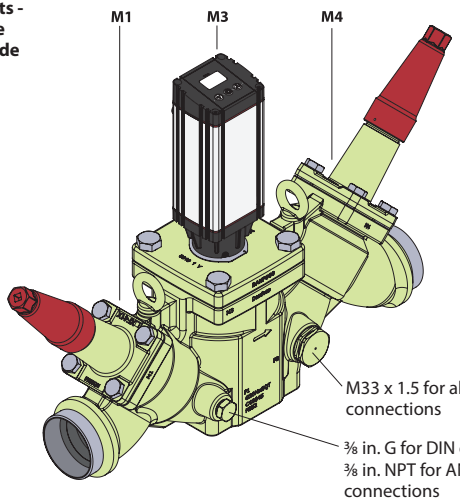

M33 x 1.5 for all connections

⅜ in. G for DIN connections
⅜ in. NPT for ANSI connections

Example: ICF 65-3-43MA DIN

© Danfoss | DCS (MS) | 2019.09

ICF 15 and ICF 20

Description of the function modules for ICF 15 and 20
ICF 15 and ICF 20 have the same function modules except for the two fixed modules M1 (stop valve ICFS 15) and M2 (filter ICFF 15) in ICF 15.

ICFS 15 / ICFS 20
Shut-off valve module
This module has the function of a stop valve, and has a red cap.

ICFR 20A
Manual regulating valve module
This module has the function of a hand regulating valve, and has a yellow cap.

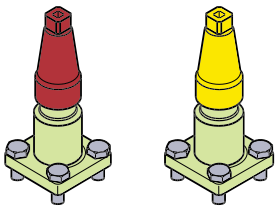
ICFS 15/ICFS 20 *ICFR 20A*

ICFC 20 / ICFC 20P1
ICFC
Standard check valve module.

ICFC 20P1
Loaded check valve module
Opening pressure of approx. 0,5 bar, and is fully open at 0,7 bar.

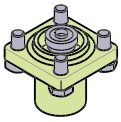
ICFC 20

ICFF 15/20 / ICFF 20E
Strainer module
This module functions as a strainer.
ICF 15, all connections:
Strainer element 150µ (100 mesh) 60 cm² (9.3 in²)
ICF 20, with DIN/ANSI connections:
Pleated 150µ (100 mesh) 45 cm² (7.0 in²)
ICF 20 with SOC connections (ICFF 20E):
Pleated 150µ (100 mesh) / 160 cm² (24.8 in²)

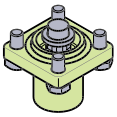
ICFF 15/20 / ICFF 20E

ICFN 20
Stop & check valve module
This module has the function of a combined stop and check valve, and has a green cap.

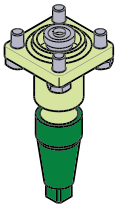
ICFN 20

ICFE 20
Solenoid valve module
This module has the function of a normally closed solenoid valve for controlling the refrigerant flow.

ICFA 20
Electronic expansion valve module
This module has the function of an electronic pulse width modulating (PWM) expansion valve.

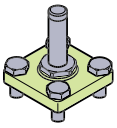
ICFE 20 / ICFA 20

ICM 20-A, B or C
Motor operated valve module
This module is a stepper motor actuator valve for on/off and modulating control of the refrigerant flow.

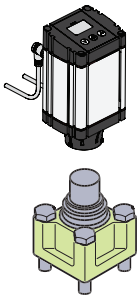
ICM 20-A, B or C

ICFO 20
Manual opening module
This module facilitates the manual opening of the solenoid valve (type ICFE).

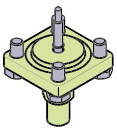
ICFO 20

ICFB 20
Blind top cover
This provides a blanking cover for unused module ports.

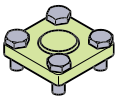
ICFB 20

ICFE 20H
Solenoid valve module with integrated manual opener
This module has the function of a normally closed solenoid valve for controlling the refrigerant flow.

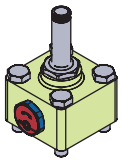
ICFE 20H

ICFW 20
Welding module 20 DIN or ¾" SOC
This module is used for drain connection during hot-gas defrosting - in case of high capacity.

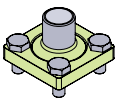
ICFW 20

ICFD 20 / ICFD 20C
Float operated valve module. This module opens for liquid flow when the float is lifted by the internal liquid level.

ICFD 20 - ammonia version
ICFD 20C - CO_2 version

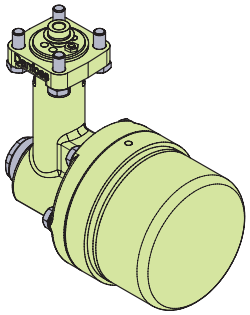

Please note:
At about 10% of maximum mass flow of ICFE 20H, the pressure differential correspond to about 0.07 bar/1 psi. ICFE 20H will start to open at these conditions.
At a pressure differential of minimum 0.2 bar/2.9 psi ICFE 20H will be 100% open.

Description of the function modules for ICF 25

ICF 25

ICFS 25
Shut-off valve module
This module has the function of a stop valve, and has a red cap.

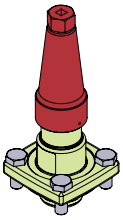
ICFS 25

ICFR 25, A or B
Manual regulating valve module
This module has the function of a hand regulating valve, and has a yellow cap.

ICFR 25

ICFC 25
Check valve module
This module has the function of a check valve.

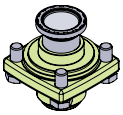
ICFC 25

ICFF 25 / ICFF 25E
Strainer module
This module functions as a strainer.

Strainer size:
ICF with DIN and ANSI (ICFF 25) connections: Pleated 150µ (100 mesh) / 160 cm^2 (24.8 in^2)

ICF with SOC connections (ICF 25E):
Pleated 150µ (100 mesh) / 330 cm^2 (51.2 in^2)

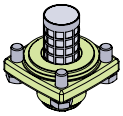
ICFF 25 / ICFF 25E

ICFN 25
Stop & check valve module
This module has the function of a combined stop and check valve, and has a green cap.

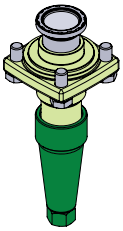
ICFN 25

ICFE 25
Solenoid valve module
This module has the function of a normally closed solenoid valve for controlling the refrigerant flow.

It has a built-in manual opening function.

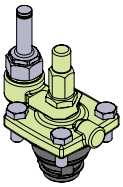
ICFE 25

ICM 25-A or B
Motor operated valve module
This module is a stepper motor actuator valve for on/off and modulating control of the refrigerant flow.

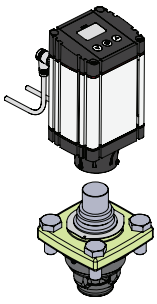
ICM 25-A or B

Please note:
At about 10% of maximum mass flow of ICFE 25, the pressure differential correspond to about 0.07 bar/1 psi. ICFE 25 will start to open at these conditions.

At a pressure differential of minimum 0.2 bar/2.9 psi ICFE 25 will be 100% open.

ICFW 25
Welding module, 25 DIN or 25 (1") SOC
This module is used for drain connection during hot-gas defrosting - in case of high capacity.

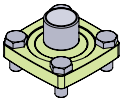
ICFW 25

ICFB 25
Blind top cover
This provides a blanking cover for unused module ports.

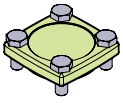
ICFB 25

© Danfoss | DCS (MS) | 2019.09

Description of the function modules for ICF 50 and ICF 65

ICF 50 and ICF 65

SVA-S 50 / SVA 65
Shut-off valve module
This module has the function of a stop valve, and has a red cap.

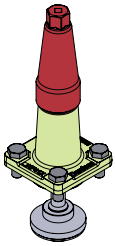

SVA-S 50 / SVA-S 65

REG-SB 50 / REG-SB 65
Manual regulating valve module
This module has the function of a hand regulating valve, and has a yellow cap.

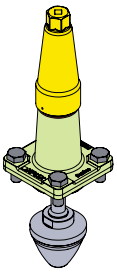

REG-SB 50 / REG-SB 65

ICFB 50
Blind cover
Prepared for insert of strainer (see below)

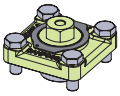

ICFB 50

FIA 50 (option)
Strainer insert

Please order FIA 50 strainer insert and element from the FIA part programme. For further information please consult the data sheet for FIA strainers.

Available elements:
See below.

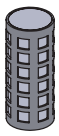

FIA 50

Strainer insert 100µ 150 mesh	Strainer insert 150µ 100 mesh	Strainer insert 250µ 72 mesh	Strainer insert 500µ 38 mesh	Pleated Strainer insert 150µ 100 mesh	Pleated Strainer insert 250µ 72 mesh	Pleated Strainer insert 500µ 38 mesh
148H3157	**148H3130**	**148H3138**	**148H3144**	**148H3179**	**148H3184**	**148H3189**

ICS 50 / ICS 65
Pilot-operated valve module
This module has the function of a pilot-operated valve for on/off and modulating control of the refrigerant flow.

All ICS modules are 3-pilot versions. They are supplied with two blanking plugs (A) and one sealing plug (B).

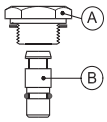

ICS 50 and 65 inserts are available in different capacities:

ICS 50:	**ICS 65:**
ICS 50	ICS 65
ICS 50-32	ICS 65-40
ICS 50-40	ICS 80

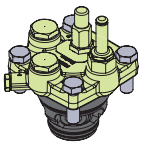

ICS 50 / ICS 65

ICM 50 / ICM 65 - A or B
Motor operated valve module
This module is a stepper motor actuator valve for on/off and modulating control of the refrigerant flow.

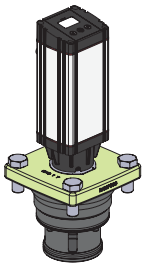

ICM 50 / ICM 65 - A or B

ICLX 50 / ICLX 65
2-step solenoid valve module
This module has the function of a normally closed gas powered solenoid valve for controlling the refrigerant flow.
It has a built-in manual opening function.
ICLX is used in suction lines for opening in 2 steps after hot gas defrost.

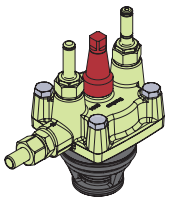

ICLX 50 / ICLX 65

ICSH 50/ICSH 65
2-step solenoid valve module
This module has the function of a normally closed solenoid valve for controlling the refrigerant flow.
It has a built-in manual opening function.
ICSH is used in hot gas lines for the opening of hot gas defrost flow to the evaporator in 2 steps.

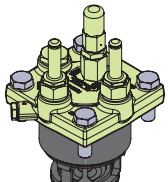

ICSH 50 / ICSH 65

Material specification

ICF housing

ICF 15-4

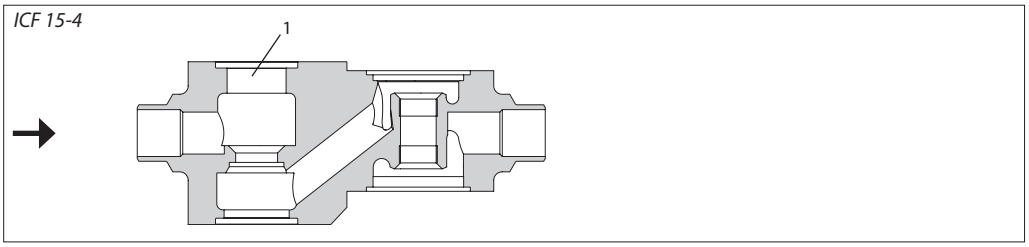

Pos.	Part	Material	EN*	ASTM**	JIS**
1	Housing	Steel	P285QH, 10222-4	LF2, A350	

ICF 20-4, 25-4

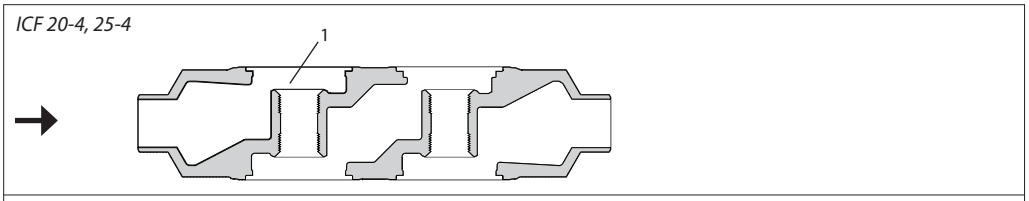

ICF 20-6, 25-6

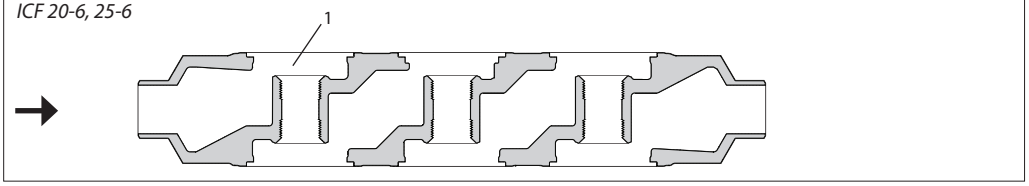

Pos.	Part	Material	EN*	ASTM**	JIS**
1	Housing	Cast steel low temperature	G20MN5QT EN 10213-3	LCC, A352	SCPL1, G5151

ICF 50-4

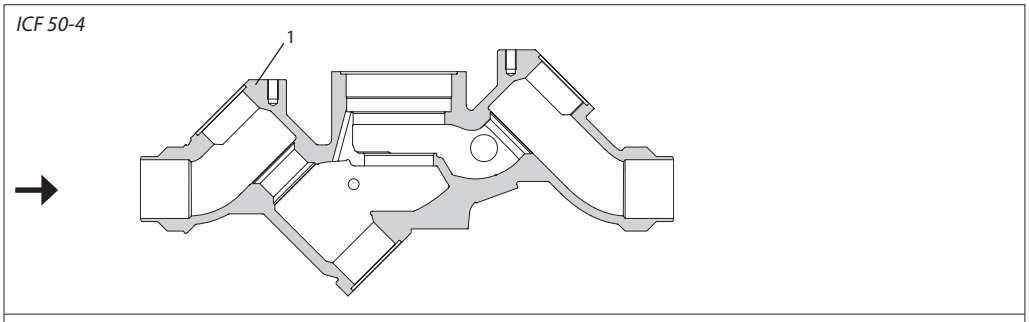

ICF 65-3

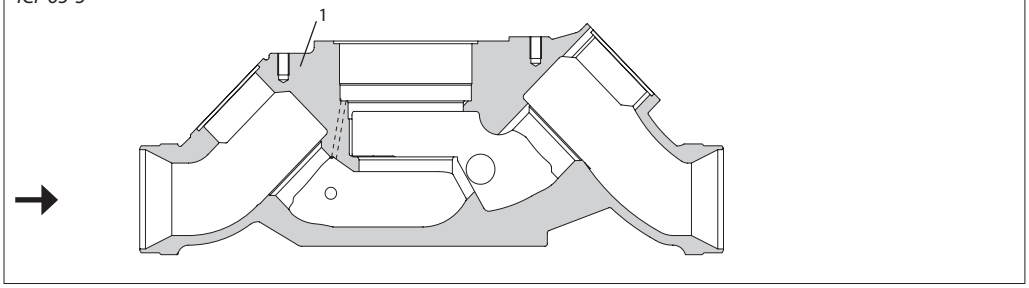

Pos.	Part	Material	EN*	ASTM**	JIS**
1	Housing	Cast steel low temperature	G20MN5QT EN 10213-3	LCC, A352	SCPL1, G5151

* EN: Primary Design Standard
** ASTM, JIS: Equivalent Material Standard

© Danfoss | DCS (MS) | 2019.09

Material specification
(continued)

ICFS 15 shut-off valve module

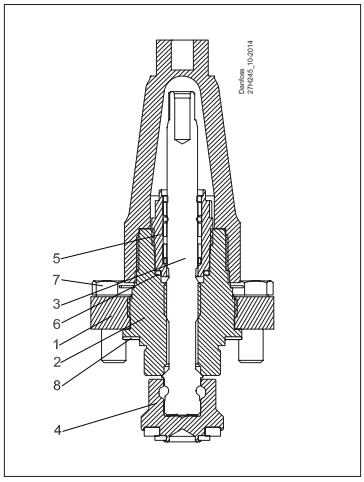

Pos.	Part	Material	EN*	ASTM**	JIS**
1	Bonnet, Flange Steel	Steel	G20Mn5QT, 10213-3 P285QH+QT, 10222-4 P275NL, 10028-3	LCC, A352 LF2, A350	
2	Bonnet, Insert	Steel	11SMn30 10087	AISI 1213	Type 2 R 683/9
3	Spindle	Stainless steel	X8CrNiS18-9 10088	AISI 303	Type 17 683/13
4	Cone	Steel	11SMn30 10087	AISI 1213	Type 2 R 683/9
5	Packing gland	Stainless steel	X8CrNiS18-9 10088	AISI 303	Type 17 683/13
6	Packing washer	Aluminium			
7	Bolts	Stainless steel	A2-70	Type 308	A2-70
8	Gasket	Fiber, Non-asbestos			

ICFS 20 shut-off valve module

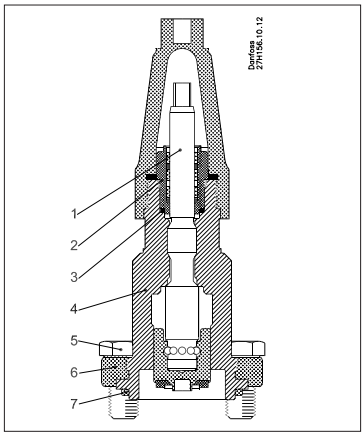

Pos.	Part	Material	EN*	ASTM**	JIS**
1	Spindle	Stainless steel	X8CrNiS 18-9 EN 10088		G4303 G4304
2	Thread part	Stainless steel	X8CrNiS 18-9 EN 10088		G4303 G4304
3	AL-gasket/ Refrig. gasket		AL99 alloy no. 1200 DIN 1712 BL.3	AL1200	
4	Bonnet	Steel	S235JRG2 EN 10025	A283	G3101
5	Hex-head bolt M10 × 25	Stainless steel	A2-70 EN 24017	A320	A2-70
6	Flange	Cast steel low temperature	G20Mn5QT EN 10213-3	A352	G5152
7	Gasket	Chloroprene (Neoprene)			

ICFF 15 strainer module (strainer element 150µ (100 mesh) 60 cm² (9.3 in²)

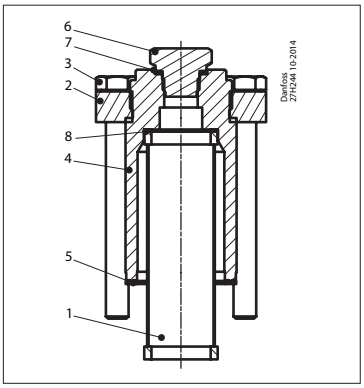

Pos.	Part	Material	EN*	ASTM**	JIS**
1	Strainer	Stainless steel			
2	Flange bonnet	Steel	G20Mn5QT, 10213-3 P285QH+QT, 10222-4 P275NL, 10028-3	LCC, A352 LF2, A350	
3	Bolt	Stainless steel	A2-70	Type 308	A2-70
4	ICFF 15 bonnet	Steel	S355J2+N 1.0570 / 1.0577 EN 10025-2	ASTM A572-50	
5	Flat gasket	Fiber, Non-asbestos			
6	Plug ¼" RG for butt weld ⅜" NPT for socket weld	Steel	11SMnPb30		
7	Gasket - metal joint	Aluminium			
8	Wave spring	Steel			

ICFF 20 strainer module

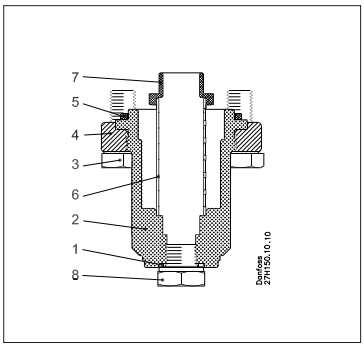

Pos.	Part	Material	EN*	ASTM**	JIS**
1	Gasket	AL 99 F11			
2	Bonnet	Steel	S235JRG2 EN 10025	A283	G3101
3	Hex-head bolt M10 × 25	Stainless steel	A2-70 EN 24017	A320	A2-70
4	Flange	Cast steel low temperature	G20Mn5QT EN 10213-3	A352	G5152
5	Gasket	Chloroprene (Neoprene)			
6	Strainer element	Stainless steel 150µ	1.4301	A304	SUS304
7	Plug	Steel			
8	Plug ¼" RG for butt weld ⅜" NPT for socket weld	Stainless steel	A2-70 EN 24017	A320	A2-70

* EN: Primary Design Standard
** ASTM, JIS: Equivalent Material Standard

Material specification
(continued)

ICFF 20E extended strainer module

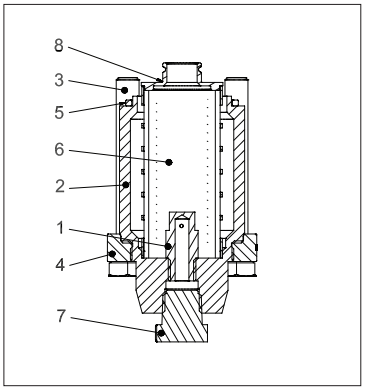

Pos.	Part	Material	EN*	ASTM**	JIS**
1	Dirt protection plug	Steel	11SMn30 EN 10087	Grade 1213 A29	G4804
2	Bonnet	Steel	11SMn30 EN 10087	Grade 1213 A29	G4804
3	Hex-head bolt M12x80	Stainless steel	A2-70 EN 1515-1	Grade B8 A320	A2-70 B1054
4	Flange	Steel	P285QH: EN 10222-4 G20Mn5QT; EN 10213-3	LF2 - A350 LCC - A352	SFL2 - G3205 SCPL1 - G5152
5	Gasket	Chloroprene (Neoprene)			
6	Strainer element	Stainless steel 250µ	1.4301	A304	SUS304
7	Plug ⅜" NPT	Steel	11SMn30 EN 10087	Grade 1213 A29	G4804
8	Strainer adaptor	Steel	11SMn30 EN 10087	Grade 1213 A29	G4804

ICFE 20 solenoid valve module

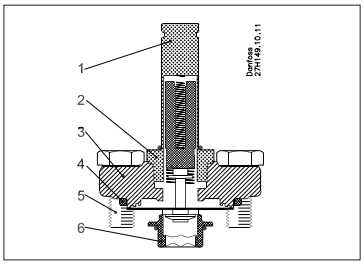

Pos.	Part	Material	EN*	ASTM**	JIS**
1	Armature tube	Stainless steel	X2CrNi19-11 EN 10088		
2	Armature tube nut	Stainless steel	X8CrNiS18-9 EN 10088		
3	Flange	Cast Steel low temperature	G20Mn5QT EN 10213-3	A352	G5152
4	Gasket	Chloroprene (Neoprene)			
5	Hex-Head bolt M10 × 25	Stainless steel	A2-70 EN 24017	A320	A2-70
6	Seat	High density polymer			

ICFE 20H solenoid valve module

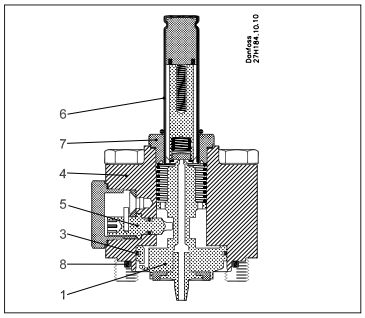

Pos.	Part	Material	EN*	ASTM**	JIS**
1	Piston	Steel	11SMn30 EN EN 10025		
2	Seat	Teflon			
3	Piston ring				
4	Bonnet cylinder	Steel	P285QH EN 10222	A350	G3205
5	Manual opener	Steel			
6	Armature tube	Stainless steel	X2CrNi19-11 EN10028		
7	Armature tube nut	Stainless steel	X2CrNi19-11 EN10216	A320	A2-70
8	Gasket	Chloroprene (Neoprene)			

ICFO 20 manual opening module

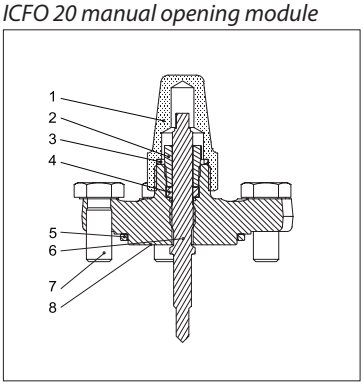

Pos.	Part	Material	EN*	ASTM**	JIS**
1	Seal cap	Steel	DIN 1651- 9SMn28 TLP surface treatment	1213 (SAE)	SUM 22
2	Gland nut	Steel	DIN 1651 9SMn28 Zinc Chromate Surface treatment	1213 (SAE)	SUM 22
3	Seal cap gasket	Nylon	Polyamid A6	Polyamid PA6	Polyamid PA6
4	Sealing ring	Teflon	PTFE	PTFE	PTFE
5	Rubber gasket	Chloroprene rubber	CR	CR	CR
6	Spindle	Stainless steel	X8CrNiS 18-9 EN 10088	G4303 G4304	SUS 303
7	Hex-head bolt M10 × 25	Stainless steel	A2-70 EN 24017	A320	A2-70
8	Flange	Cast steel low temperature	EN10222-4 P285QH		

* EN: Primary Design Standard
** ASTM, JIS: Equivalent Material Standard

© Danfoss | DCS (MS) | 2019.09

Material specification
(continued)

ICFR 20 manual regulating valve module

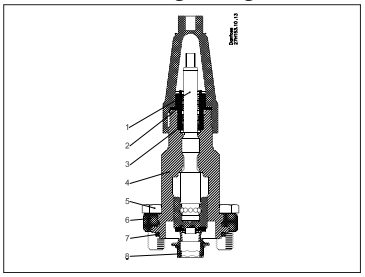

Pos.	Part	Material	EN*	ASTM**	JIS**
1	Spindle	Stainless steel	X8CrNiS 18-9 EN 10088		G4303 G4304
2	Thread part	Stainless steel	X8CrNiS 18-9 EN 10088		G4303 G4304
3	AL-gasket		AL99 alloy no. 1200 DIN 1712 BL.3		
4	Bonnet	Steel	S235JRG2 EN 10025	A283	G3101
5	Hex-head bolt M10 × 25	Stainless steel	A2-70 EN 24017	A320	A2-70
6	Flange	Cast steel low tem-perature	G20Mn5QT EN 10213-3	A352	G5152
7	Gasket	Chloroprene (Neoprene)			
8	Seat	High density polymer			

ICFA 20 electronic expansion valve module

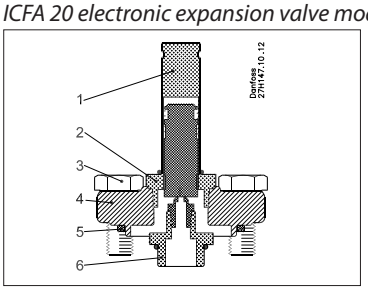

Pos.	Part	Material	EN*	ASTM**	JIS**
1	Armature tube	Stainless steel	X2CrNi19-11 EN 10088		
2	Armature tube nut	Stainless steel	X8CrNiS18-9 EN 10088		
3	Hex-head bolt M10 × 25	Stainless steel	A2-70 EN 24017	A320	A2-70
4	Flange	Cast steel low tem-perature	G20Mn5QT EN 10213-3	A352	G5152
5	Gasket	Chloroprene (Neoprene)			
6	Adaptor	Steel			

ICFC 20 check valve module

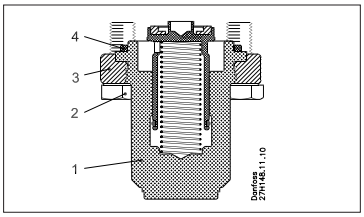

Pos.	Part	Material	EN*	ASTM**	JIS**
1	Bonnet	Steel	S235JRG2	A283	G3101
2	Hex-head bolt M10 × 25	Stainless steel	A2-70 EN 24017	A320	A2-70
3	Flange	Cast steel low tem-perature	G20Mn5QT EN 10213-3	A352	AG5152
4	Gasket	Chloroprene (Neoprene)			

ICFC 20P1 check valve module

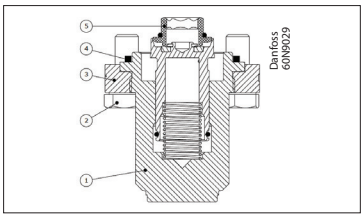

Pos.	Part	Material	EN*	ASTM**	JIS**
1	Bonnet	Steel	S235JRG2	A283	G3101
2	Hex-head bolt M10 × 25	Stainless steel	A2-70 EN 24017	A320	A2-70
3	Flange	Cast steel low temperature	G20Mn5QT EN 10213-3	A352	AG5152
4	Gasket	Chloroprene (Neoprene)			
5	Seat	High density polymer			

ICFN 20 stop & check valve module

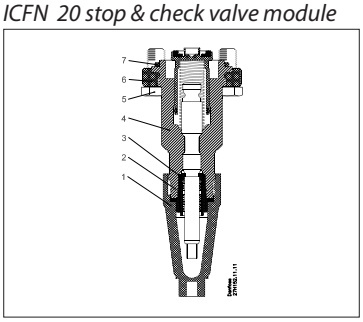

Pos.	Part	Material	EN*	ASTM**	JIS**
1	Spindle	Stainless steel	X8CrNiS 18-9 EN 10088		G4303 G4304
2	Thread part	Stainless steel	X8CrNiS 18-9 EN 10088		G4303 G4304
3	AL-gasket		AL99 alloy no. 1200 DIN 1712 BL.3		
4	Bonnet	Steel	S235JRG2 EN 10025	A283	G3101
5	Hex-head bolt M10 × 25	Stainless steel	A2-70 EN 24017	A320	A2-70
6	Flange	Cast steel low tem-perature	G20Mn5QT EN 10213-3	A352	G5152
7	Gasket	Chloroprene (Neoprene)			

ICM 20-A, 20-B or 20-C motor operated valve module

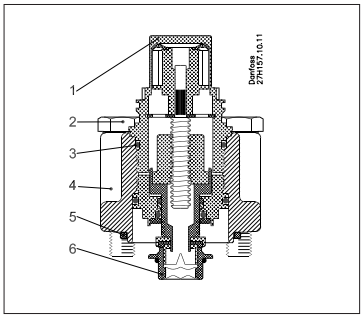

Pos.	Part	Material	EN*	ASTM**	JIS**
1	Adapter	Stainless steel	X5CrNi18-10 EN 10088	A240	G4303 G4304
2	Hex-head bolt M10 × 50	Stainless steel	A2-70 EN 24014	A320	A2-70
3	O-ring	Chloroprene			
4	Bonnet	Cast steel low tem-perature	G20Mn5QT EN 10213-3	A352	G5152
5	Gasket	Chloroprene (Neoprene)			
6	Seat	High density polymer			

* EN: Primary Design Standard
** ASTM, JIS: Equivalent Material Standard

Material specification
(continued)

ICFD 20 / ICFD 20C defrost module

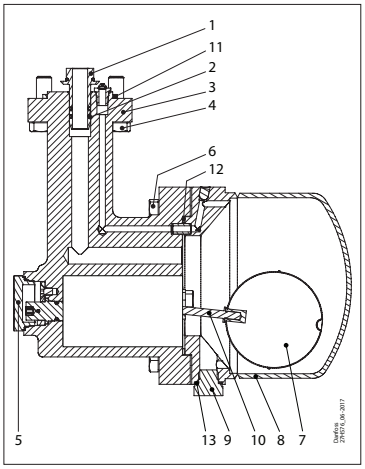

Pos.	Part	Material	EN	ASTM	JIS
1	Inlet connector	steel	S235JR EN 10025 - 2	A283	G3101
2	O-ring Inlet connector	Chloroprene			
3	Valve Body	Cast Iron	EN -GJS- 400- 18-LT EN 1563		
4	Hex-head bolt M10x30	Stainless Steel	A2-70 EN 24017	A320	A2-70
5	Union nut	Stainless Steel	X8CrNiS18-9 EN 10088-3	AISI303	SUS303
6	Hex-head bolt M10x35	Stainless Steel	A2-70 EN 24017	A320	A2-70
7	Float	Stainless Steel	ICFD 20 : AISI 316 ICFD 20C : AISI 304		
8	Float housing	Stainless Steel	S355J2+N EN 10025-2	A572-50	SM490YB
9	Drain plug ¼" G	Steel	11SMnPb30 EN 10087		
10	Float lever	Steel	S235JR EN 10025 - 2	A283	G3101
11	Rubber Gasket	Chloroprene (Neoprene)			
12	Gasket	Fibre, Non Asbestos			
13	Gasket - Drain Plug	AL 99F11			

ICFB 20 blind top cover

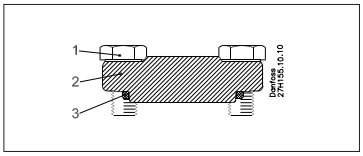

Pos.	Part	Material	EN	ASTM	JIS
1	Hex-head bolt M10 × 25	Stainless Steel	A2-70 EN 24017	A320	A2-70
2	Flange	Cast steel low temperature	G20Mn5QT EN 10213-3	A352	G5152
3	Gasket	Chloroprene (Neoprene)			

ICFW 20 welding module, 20 DIN or ¾" SOC

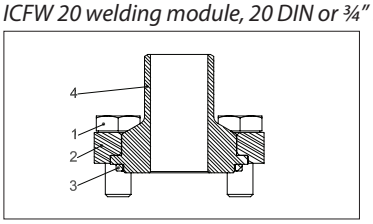

Pos.	Part	Material	EN	ASTM	JIS
1	Hex-head bolt M10 × 25	Stainless Steel	A2-70 EN 24017	A320	A2-70
2	Flange	Cast steel low temperature	G20Mn5QT EN 10213-3	A352	G5152
3	Gasket	Chloroprene (Neoprene)			
4	Weld connection	Steel	S355J2+N EN 10025-2	A572-50	G3106 SM49

* EN: Primary Design Standard
** ASTM, JIS: Equivalent Material Standard

© Danfoss | DCS (MS) | 2019.09

Material specification
(continued)

ICFS 25 shut-off valve module

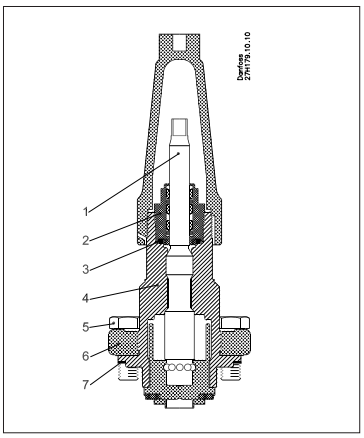

Pos.	Part	Material	EN*	ASTM**	JIS**
1	Spindle	Stainless steel	X8CrNiS 18-9 EN 10088		G4303 G4304
2	Thread part	Stainless steel	X8CrNiS 18-9 EN 10088		G4303 G4304
3	O-ring	Chloroprene			
4	Bonnet	Steel	S355J2+N 1.0570 / 1.0577 EN 10025-2	ASTM A572-50	
5	Hex-head bolt M12 × 30	Stainless steel	A2-70 EN 24017	A320	A2-70
6	Flange	Cast steel low temperature	G20Mn5QT EN 10213-3	A352	G5152
7	Gasket	Fiber non asbestos			

ICFF 25 strainer module

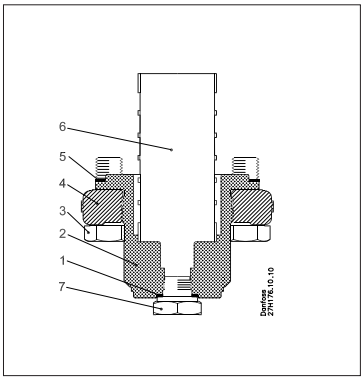

Pos.	Part	Material	EN*	ASTM**	JIS**
1	Al. Gasket	AL 99 F11			
2	Bonnet	Steel	S355J2+N 1.0570 / 1.0577 EN 10025-2	ASTM A572-50	
3	Hex-head bolt M12 × 30	Stainless steel	A2-70 EN 24017	A320	A2-70
4	Flange	Cast steel low temperature	G20Mn5QT EN 10213-3	A352	G5152
5	Gasket	Fiber non asbestos			
6	Strainer element	Stainless steel 150µ	1.4301	A304	SUS304
7	Plug ¼" RG for butt-weld ⅜" NPT for socket weld	Stainless steel	A2-70 EN 24017	A320	A2-70

ICFF 25E extended strainer module

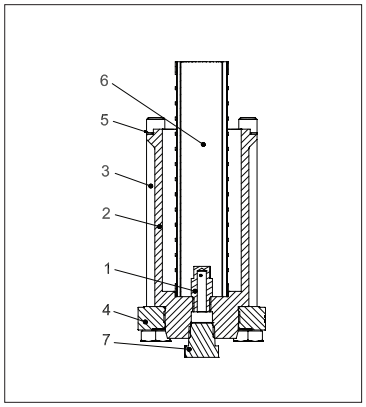

Pos.	Part	Material	EN*	ASTM**	JIS**
1	Dirt protection plug	Steel	11SMn30 EN 10087	Grade 1213 A29	G4804
2	Bonnet	Steel	S355J2+N 1.0570 / 1.0577 EN 10025-2	ASTM A572-50	
3	Hex-head bolt M12x140	Stainless steel	A2-70 EN 1515-1	Grade B8 A320	A2-70 B1054
4	Flange	Steel	P285QH: EN 10222-4 G20Mn5QT; EN 10213-3	LF2 - A350 LCC - A352	SFL2 - G3205 SCPL1 - G5152
5	Gasket	Fiber non asbestos			
6	Strainer element	Stainless steel 250µ	1.4301	A304	SUS304
7	Plug ⅜" NPT	Steel	11SMn30 EN 10087	Grade 1213 A29	A29

ICFE 25 solenoid valve module

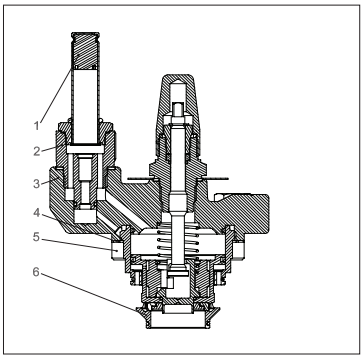

Pos.	Part	Material	EN*	ASTM**	JIS**
1	Armature tube	Stainless steel	X2CrNi19-11 EN 10088		
2	Armature tube nut	Stainless steel	X8CrNiS18-9 EN 10088		
3	Bonnet	Cast steel low temperature	G20Mn5QT EN10213-3	A352	G5152
4	Gasket	Fiber non asbestos			
5	Hex-Head bolt M10 × 25	Stainless steel	A2-70 EN 24017	A320	A2-70
6	Seat	High density polymer			

* EN: Primary Design Standard
** ASTM, JIS: Equivalent Material Standard

Material specification
(continued)

ICFR 25 manual regulating valve module, A or B

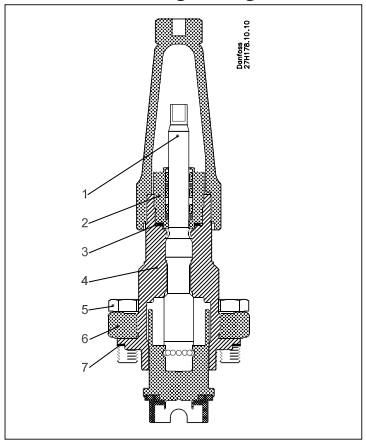

Pos.	Part	Material	EN*	ASTM**	JIS**
1	Spindle	Stainless steel	X8CrNiS 18-9 EN 10088		G4303 G4304
2	Thread part	Stainless steel	X8CrNiS 18-9 EN 10088		G4303 G4304
3	O-ring	Chloroprene			
4	Bonnet	Steel	S355J2+N 1.0570 / 1.0577 EN 10025-2	ASTM A572-50	
5	Hex-head bolt M12 × 30	Stainless steel	A2-70 EN 24017	A320	A2-70
6	Flange	Cast steel low temperature	G20Mn5QT EN 10213-3	A352	G5152
7	Gasket	Fiber non asbestos			
8	Seat	High density polymer			

ICFC 25 check valve module

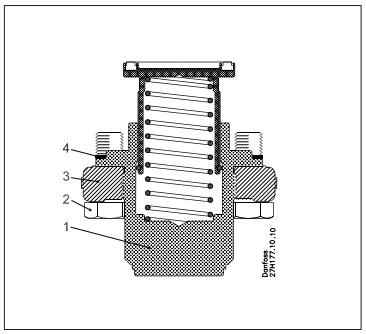

Pos.	Part	Material	EN*	ASTM**	JIS**
1	Bonnet	Steel	S355J2+N 1.0570 / 1.0577 EN 10025-2	ASTM A572-50	
2	Hex-head bolt M12 × 30	Stainless steel	A2-70 EN 24017	A320	A2-70
3	Flange	Cast steel low temperature	G20Mn5QT EN 10213-3	A352	AG5152
4	Gasket	Fiber non asbestos			

ICFN 25 stop & check valve module

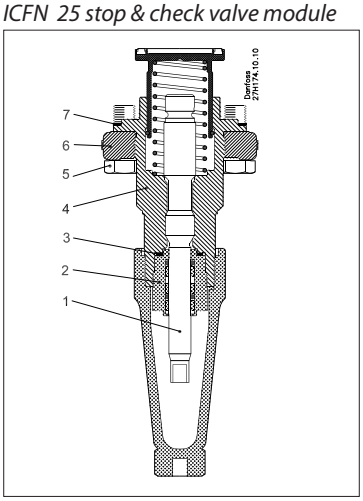

Pos.	Part	Material	EN*	ASTM**	JIS**
1	Spindle	Stainless steel	X8CrNiS 18-9 EN 10088		G4303 G4304
2	Thread part	Stainless steel	X8CrNiS 18-9 EN 10088		G4303 G4304
3	O-ring	Chloroprene			
4	Bonnet	Steel	S355J2+N 1.0570 / 1.0577 EN 10025-2	ASTM A572-50	
5	Hex-head bolt M12 × 30	Stainless steel	A2-70 EN 24017	A320	A2-70
6	Flange	Cast steel low temperature	G20Mn5QT EN 10213-3	A352	G5152
7	Gasket	Fiber non asbestos			

ICM 25-A or B motor operated valve module

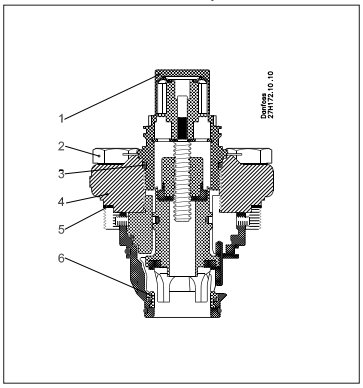

Pos.	Part	Material	EN*	ASTM**	JIS**
1	Adapter	Stainless steel	X5CrNi18-10 EN 10088	A240	G4303 G4304
2	Hex-head bolt M12 × 30	Stainless steel	A2-70 EN 24014	A320	A2-70
3	O-ring	Chloroprene			
4	Bonnet	Cast steel low temperature	G20Mn5QT EN 10213-3	A352	G5152
5	Gasket	Fiber non asbestos			
6	Seat	High density polymer			

* EN: Primary Design Standard
** ASTM, JIS: Equivalent Material Standard

© Danfoss | DCS (MS) | 2019.09

Material specification
(continued)

ICFB 25 blind top cover

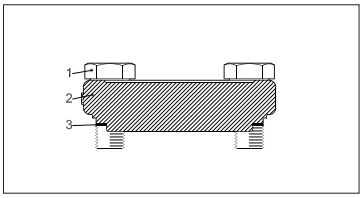

Pos.	Part	Material	EN*	ASTM**	JIS**
1	Hex-head bolt M10 × 25	Stainless Steel	A2-70 EN 24017	A320	A2-70
2	Flange	Cast steel low temperature	G20Mn5QT EN 10213-3	A352	G5152
3	Gasket	Fiber non asbestos			

ICFW 25 welding module, 25 DIN or 25 (1") SOC

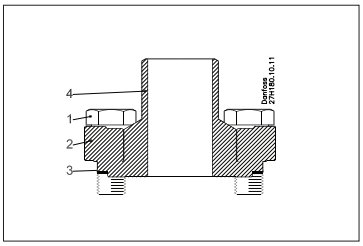

Pos.	Part	Material	EN*	ASTM**	JIS**
1	Hex-head bolt M10 × 25	Stainless Steel	A2-70 EN 24017	A320	A2-70
2	Flange	Cast steel low temperature	G20Mn5QT EN 10213-3	A352	G5152
3	Gasket	Fiber non asbestos			
4	Weld connection	Steel	S355J2+N EN 10025-2	A572-50	G3106 SM49

SVA-S 50 / SVA-S 65 shut-off valve module

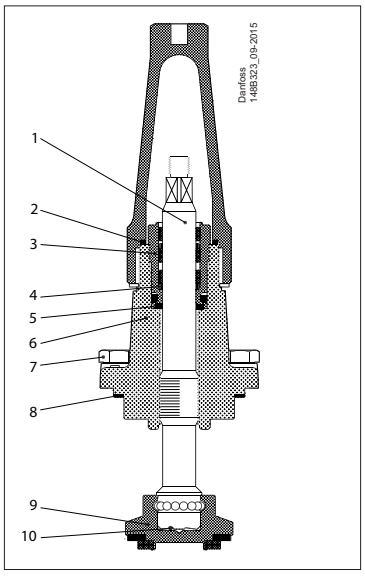

Pos.	Part	Material	EN*	ASTM**
1	Spindle	Stainless steel	X8CrNiS18-9 10088	AISI 303
2	Gasket for cap	Nylon		
3	Packing gland	Stainless steel	X8CrNiS18-9 10088	AISI 303
4	Spring loaded Teflon ring	PTFE		
5	Packing washer	Aluminium		
6	Bonnet	Steel	P285QH+QT, EN 10222-4	LF2, A350
7	Bolts	Stainless steel	A2-70	Type 308
8	Gasket	Fiber, non asbestos		
9	Cone	Steel	11SMn30 10087	AISI 1213
10	Disk spring	Steel		

REG-SB 50 / REG-SB 65 manual regulating valve module

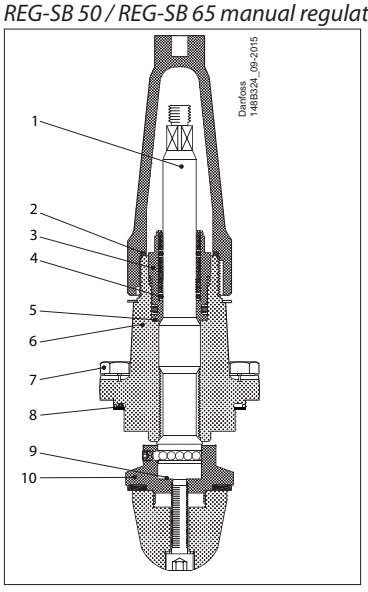

Pos.	Part	Material	EN*	ASTM**
1	Spindle	Stainless steel	X8CrNiS 18-9, 17440	AISI 303
2	Gasket for cap	Nylon		
3	Packing gland	Stainless Steel	X8CrNiS 18-9, 10088	AISI 303
4	Spring loaded Teflon ring	PTFE		
5	Packing washer	Aluminium		
6	Bonnet	Steel	P285QH+QT 10222-4	LF2 A350
7	Bolts	Stainless steel	A2-70	Type 308
8	Gasket	Fiber, non asbestos		
9	Disk spring	Steel		
10	Cone	Steel		

* EN: Primary Design Standard
** ASTM, JIS: Equivalent Material Standard

Material specification
(continued)

ICFB 50 blind top cover

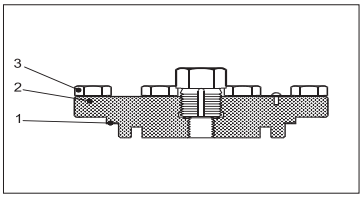

Pos.	Part	Material	EN*	ASTM**	JIS**
1	Gasket	Fiber non asbestos			
2	Flange	Cast steel low temperature	G20Mn5QT EN 10213-3	A352	G5152
3	Hex-head bolt M10 × 25	Stainless Steel	A2-70 EN 24017	A320	A2-70

ICS 50 / ICS 65 pilot-operated valve module

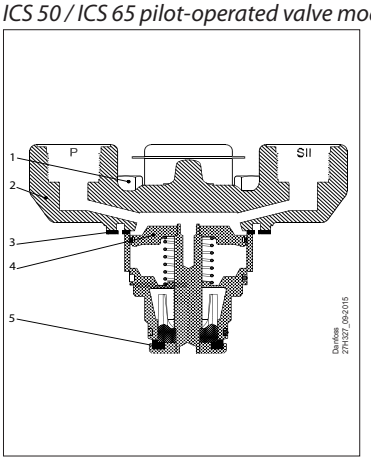

Pos.	Part	Material	EN*	ASTM**
1	Bolts	Stainless steel	A2-70, EN 1515-1	Grade B8 A320
2	Bonnet	Low temperature steel	G20Mn5QT, EN 10213-3 P285QH+QT EN 10222-4	LCC A352 LF2, A350
3	Gasket	Fiber, non-asbestos		
4	Piston	Steel		
5	Valve plate	PTFE		

ICM 50 / ICM 65 motor operated valve module

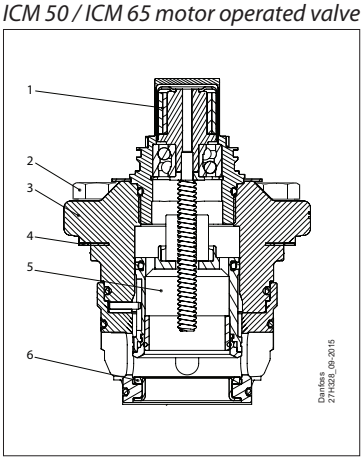

Pos.	Part	Material	EN*	ASTM**
1	Adaptor	Stainless steel	X5CrNi18-10 EN 10088	A240
2	Bolts	Stainless steel	A2-70, EN 1515-1	Grade B8 A320
3	Bonnet	Low temperature steel	G20Mn5QT, EN 10213-3	LCC A352
4	Gasket	Fiber, non-asbestos		
5	Piston	Steel		
6	Valve plate	PTFE		

ICLX 50 / ICLX 65 2-step solenoid valve module

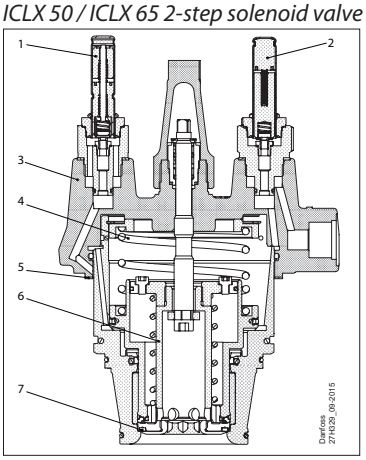

Pos.	Part	Material	EN*	ASTM**
1	EVM pilot NO			
2	EVM pilot NC			
3	Bonnet	Low temperature steel	P285QH, EN 10222-4	LF2, A350
4	Spring	Stainless steel		
5	Gasket	Fiber, non-asbestos		
6	Main piston	Steel		
7	Seat plate main	PTFE		

* EN: Primary Design Standard
** ASTM, JIS: Equivalent Material Standard

© Danfoss | DCS (MS) | 2019.09

Material specification
(continued)

ICSH 50 / ICSH 65 2-step solenoid valve module

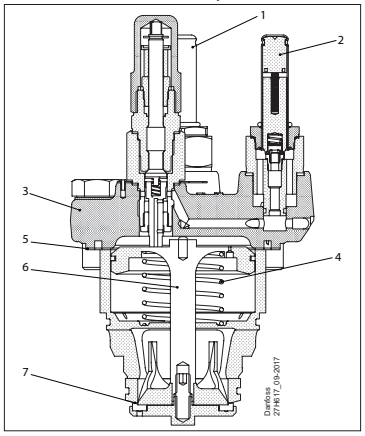

Pos.	Part	Material	EN*	ASTM**
1	EVM pilot NC			
2	EVM pilot NC			
3	Bonnet	Low temperature steel	P285QH, EN 10222-4	LF2, A350
4	Spring	Stainless steel		
5	Gasket	Fiber, non-asbestos		
6	Main piston	Steel		
7	Seat plate main	PTFE		

* EN: Primary Design Standard
** ASTM, JIS: Equivalent Material Standard

Code number selection

To determine the correct ICF valve station follow steps 1 through 5.

Step 1 **Determine application and function requirements:**
- Line: Pumped liquid, Liquid Injection, Hot gas defrost, Liquid DX, Return line etc.
- Control: On/off solenoid valve, motorised valve
- Defrost: Electric or hot gas

From the above determine the application reference number (see page 24):

Step 2 **Selection criteria - (Please use Danfoss calculation software)**
Download the software from:
http://refrigerationandairconditioning.danfoss.com/support-center/apps-and-software/coolselector/
- Refrigerant
- Capacity
- Temperature
- Circulation rate

From the above determine the valve station required, e.g.: ICF 20 complete with ICM 20-C

Step 3 **Establish connection sizes and type**
- DIN butt-weld, ANSI butt-weld or SOC weld
- 15 (½"), 20 (¾ in.), 25 (1 in.), 32 (1 ¼ in.) or , 40 (1½in.), 50 (2 in.), 65 (2½ in.) or 80 (3 in.)

Step 4 **Establish code number**
(see pages 25 to 37)

Example of application:
Liquid feed line

A valve combination for a flooded evaporator operating on/off from a thermostat and with electric defrost is required. Manual override of the solenoid valve is requested. Common ICF configurations for this kind of application is shown here:

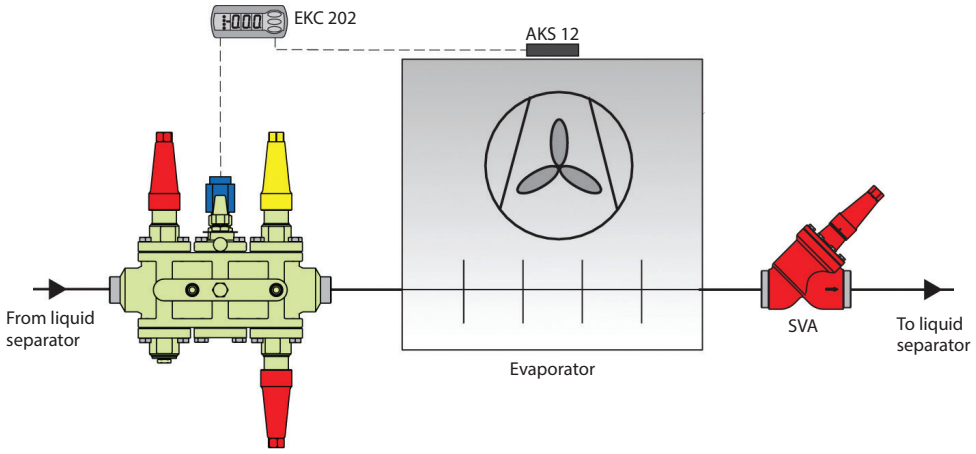

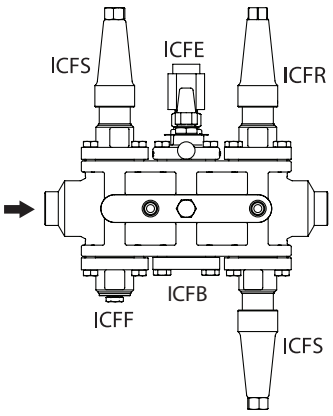

Not all valves are shown. Not to be used for construction purposes.

Example of application:
Liquid feed line/
Hot gas defrost line

Evaporator with 2 stage gas powered valve ICLX in the suction line and hot gas defrost featuring: ICF liquid feed station and ICF Hot gas station with side port to power ICLX. ICS+CVP as a defrost regulator (OFV optional depending on capacity).

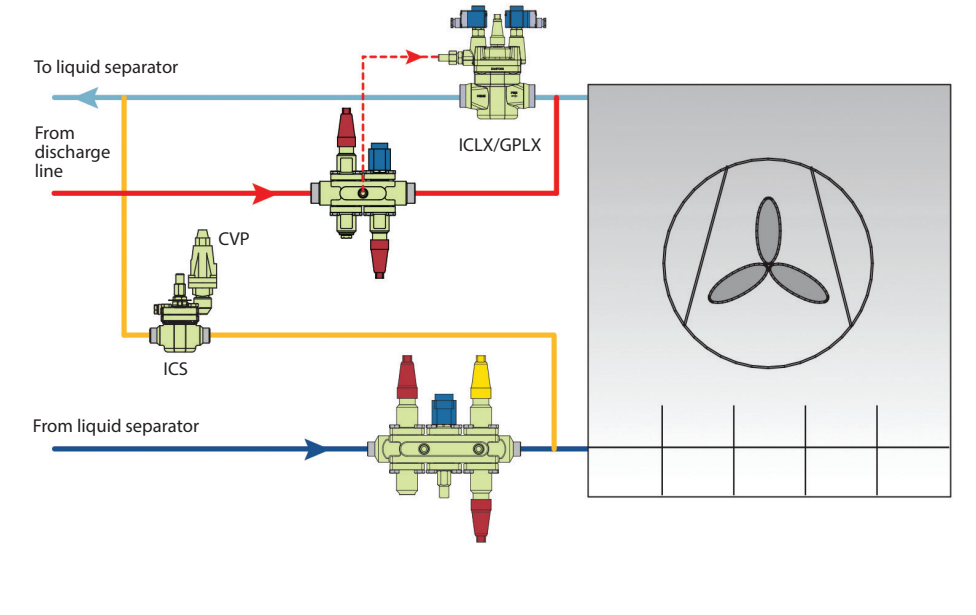

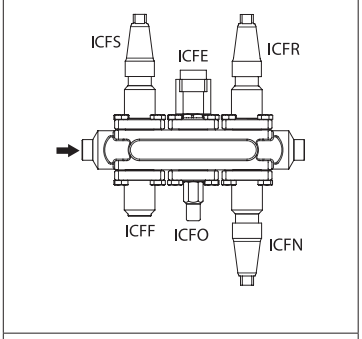

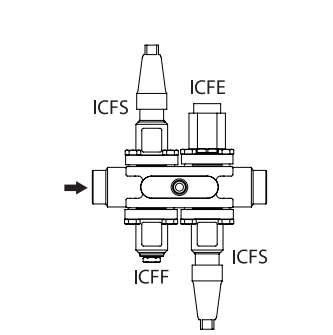

Not all valves are shown. Not to be used for construction purposes.

© Danfoss | DCS (MS) | 2019.09

Example of application: Liquid injection line

A valve combination for liquid injection to separator with electronic injection valve is required. It is requested to have a solenoid valve in front of the control valve.

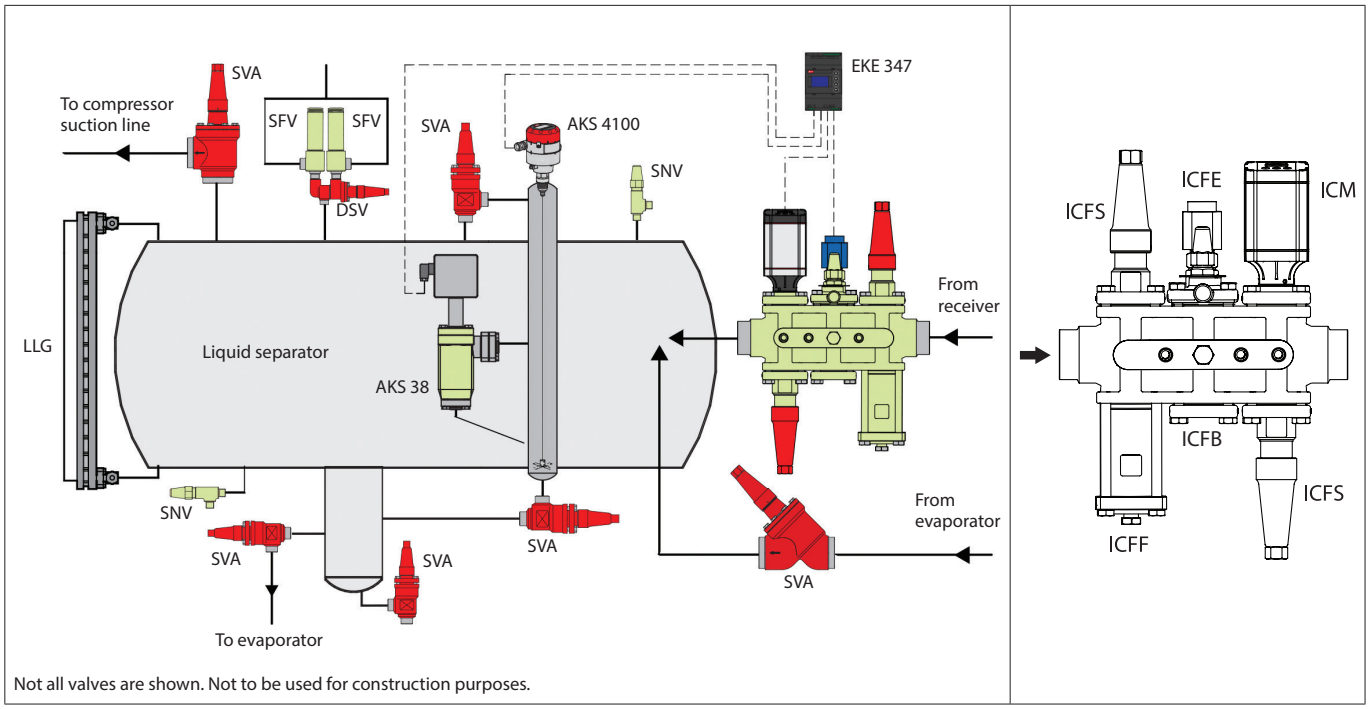

Not all valves are shown. Not to be used for construction purposes.

Example of application: Liquid injection line

A valve combination for compressor liquid injection with electronic injection valve is required. It is a required to have a solenoid valve in front of the control valve.

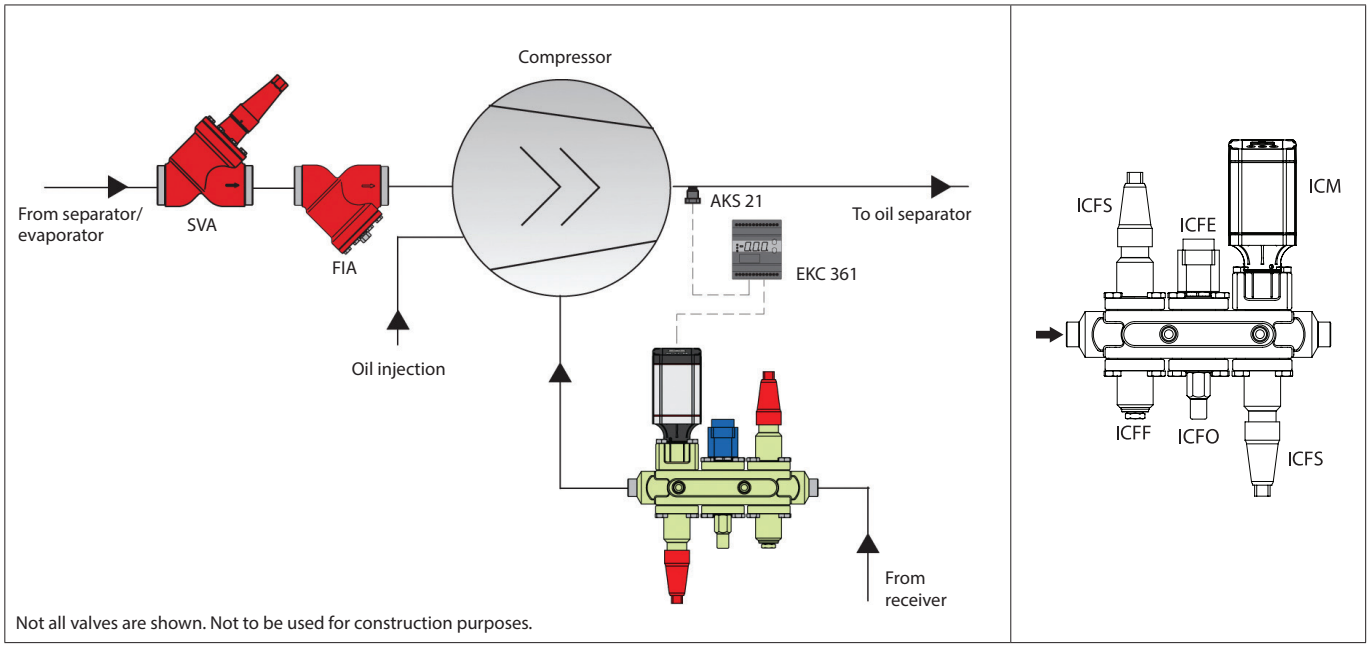

Not all valves are shown. Not to be used for construction purposes.

Example of application: Liquid feed line/Hot gas defrost line Return line/Defrost drain line

Evaporator with 2 stage gas powered ICLX module in suction line ICF and ICF liquid feed valve station. Hot gas defrost featuring: ICF hot gas valve station with side port to power ICLX module and ICF drain station with float activated liquid drainage to suction line ICF side port.

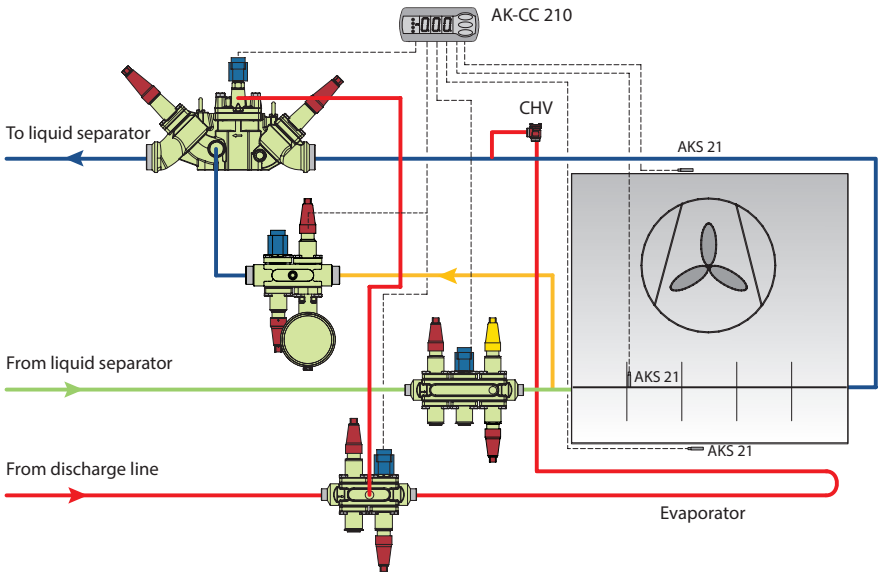

Not all valves are shown. Not to be used for construction purposes.

Note:
Restrictions to ICF drain station piping - please see AB236886443340

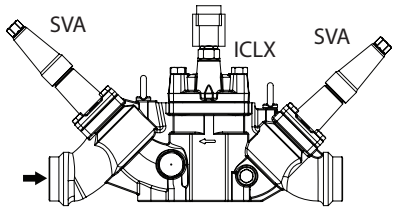

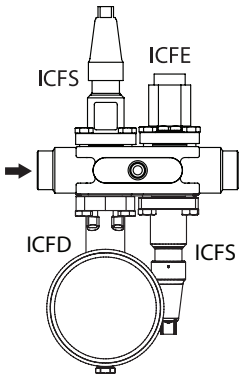

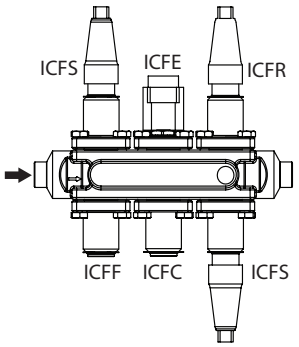

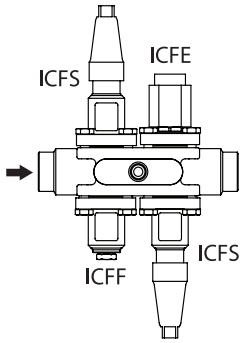

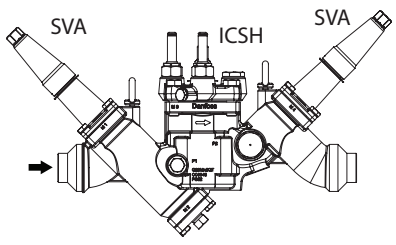

© Danfoss | DCS (MS) | 2019.09

Connections

D: *Butt-weld DIN (EN 10220)*

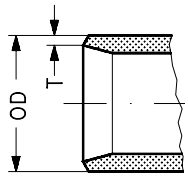

Size mm	Size in.	OD mm	T mm	OD in.	T in.		
15	½	21.3	1.3	0.839	0.052		
20	¾	26.9	2.3	1.059	0.091		
25	1	33.7	2.6	1.327	0.103		
32	1¼	42.4	2.6	1.669	0.102		
40	1½	48.3	2.6	1.902	0.103		
50	2	60.3	2.9	2.37	0.11		
65	2½	76.1	2.9	3.00	0.11		
80	3	88.9	3.2	3.50	0.13		

A: *Butt-weld ANSI (B 36.10)*
Butt weld ANSI (B 36.19)

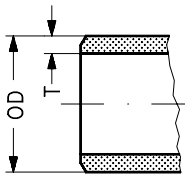

Size mm	Size in.	OD mm	T mm	OD in.	T in.	Schedule	
15	½	21.3	2.7	0.839	0.105	80	
20	¾	26.9	4.0	1.059	0.158	80	
25	1	33.7	4.6	1.327	0.181	80	
32	1¼	42.4	4.9	1.669	0.193	80	
40	1½	48.3	5.1	1.902	0.201	80	
65	2½	73.0	5.2	2.87	0.20	40	
80	3	88.9	5.5	3.50	0.22	40	

SOC: *Socket welding ANSI (B 16.11)*

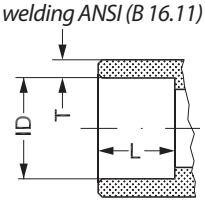

Size mm	Size in.	ID mm	T mm	ID in.	T in.	L mm	L in.
15	½	21.9	5.9	0.862	0.232	10.25	0.40
20	¾	27.2	4.6	1.071	0.181	13	0.51
25	1	33.9	7.2	1.335	0.284	13	0.51
32	1¼	42.7	6.1	1.743	0.240	13	0.51
40	1½	48.8	6.6	1.921	0.260	13	0.51
50	2	61.2	6.2	2.41	0.24	16	0.63

SD: *Soldering (DIN 2856)*

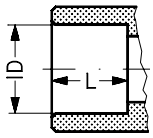

Size mm	Size in.	ID mm		ID in.		L mm	L in.
22		22.08				16.5	

SA: Soldering (ANSI B 16.22)

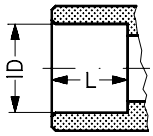

Size mm	Size in.	ID mm		ID in.		L mm	L in.
	⅞			0.875			0.650

FPT:
Female pipe thread,
(ANSI/ASME B 1.20.1)

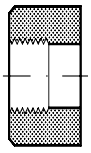

Size mm	Size in.	Inside pipe thread	
(15)	½	(½ × 14 NPT)	

Ordering ICF valve station

Below Nomenclature show the generic configuration and application by identification of housing size, type and application group.

This designation is often used for discussion on possible solutions and will be the final identification on the valve label (see label example)

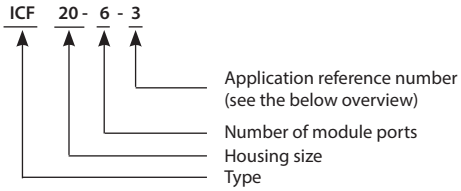

For ordering, connection size and type must be chosen to get the final identification. **The final identification is done by code number only** (see next pages)

Label example:

Application overview (generic configuration - connection type and size excluded)

Application #		Sequence of functions					
		M1	M2	M3	M4		
Liquid feed							
1	Liquid feed (No hotgas defrost)	Shut-off	Strainer	Solenoid	Man Open	Regul.	Shut-off
2	Liquid feed	Shut-off	Strainer	Solenoid	Man Open	Regul.	Stop & check
3	Liquid feed	Shut-off	Strainer	Solenoid	Check	Regul.	Shut-off
10	Liquid feed (No hotgas defrost)	Shut-off	Strainer	Solenoid	Regul.		
15	Liquid feed w. external Conn.	Shut-off	Strainer	Solenoid	Check	Welding	Regul.
Solenoid common							
4	Solenoid - Liquid & Hot gas lines	Shut-off	Strainer	Solenoid	Man Open	Shut-off	
8	Solenoid - Liquid & Hot gas lines	Shut-off	Strainer	Solenoid	Man Open		
Liquid injection							
5	Liquid injection (expansion)	Shut-off	Strainer	Solenoid	Man Open	Motor	Shut-off
12	Liquid injection (expansion) PWM	Shut-off	Strainer	El. Exp.	Shut-off		
14	Liquid injection (expansion)	Shut-off	Strainer	Motor	Shut-off		
Hot gas defrost							
9	Hot gas defrost	Shut-off	Strainer	Solenoid	Shut-off		
Hot gas defrost (ICF 50 only)							
47	Hot gas defrost - On/Off 2-step solenoid	Shut-off	Strainer option*	Solenoid	Shut-off		
48	Hot gas defrost - On/Off 2-step solenoid + manual Regulating	Shut-off	Strainer option*	Solenoid	Regul.		
Solenoid multiple evaporators							
11	Solenoid - Multiple evaporators	Shut-off	Strainer	Solenoid	Check		
18	Solenoid - Multiple evaporators	Shut-off	Strainer	Solenoid	Stop & check		
Liquid PWM							
13	Liquid injection & liquid feed PWM	Shut-off	Strainer	El. Exp.	Stop & check		
Return line (ICF 50 and ICF 65 only)							
41	ON/OFF 2-step solenoid	Shut-off	Strainer option*	Solenoid	Shut-off		
42	Pressure (temperature) Mechanical control	Shut-off	Strainer option*	ICS options**	Shut-off		
43	Pressure (temperature) Electronic control	Shut-off	Strainer option*	Motor	Shut-off		
44	ON/OFF 2-step solenoid + Manuel Regulating	Shut-off	Strainer option*	Solenoid	Regul.		
45	Pressure (temperature) Mechanical control + Manuel Regulating	Shut-off	Strainer option*	ICS options**	Regul.		
46	Pressure (temperature) Electronic control + Manuel Regulating	Shut-off	Strainer option*	Motor	Regul.		
Miscellaneous							
90	Multipurpose configurations						
Defrost drain line							
101D1P1	Liquid drain M2, loaded check valve without solenoid - 1 shut-off	Shut-off	Liquid drain (ammonia)	Loaded check			
102D1	Liquid drain M2 with solenoid - 2 shut-off	Shut-off	Liquid drain (ammonia)	Solenoid	Shut-off		
102D2	Liquid drain M2 with solenoid - 2 shut-off	Shut-off	Liquid drain (CO_2)	Solenoid	Shut-off		
103D1	Liquid drain M4 with solenoid - 1 shut-off	Shut-off		Solenoid	Liquid drain (ammonia)		
104D1	Liquid drain M4 with strainer and solenoid - 1 shut-off	Shut-off	Strainer	Solenoid	Liquid drain (ammonia)		
104D2	Liquid drain M4 with strainer and solenoid - 1 shut-off	Shut-off	Strainer	Solenoid	Liquid drain (CO_2)		
105D1	Liquid drain M2 with solenoid - 1 shut-off	Shut-off	Liquid drain (ammonia)	Solenoid			
105D2	Liquid drain M2 with solenoid - 1 shut-off	Shut-off	Liquid drain (CO_2)	Solenoid			
106D1	Liquid drain M2 with solenoid and manual opener - 1 shut off	Shut-off	Liquid drain (ammonia)	Solenoid	Man Open		
107D1	Liquid drain M2 with solenoid and manual opener - 2 shut off	Shut-off	Liquid drain (ammonia)	Solenoid	Man Open		
108D1	Liquid drain M2 without solenoid - 2 shut off	Shut-off	Liquid drain (ammonia)		Shut-off		
109D2	Liquid drain M2	Shut-off	Liquid drain (CO_2)	Solenoid	Stop & check		
110D1P1	Liquid drain M2, loaded check valve without solenoid - 2 shut-off	Shut-off	Liquid drain (ammonia)	Loaded check	Shut-off		

* ICF 50 only

* ICF 50 only
** ICS typical options: On/Off solenoid, Pressure or Temperature control (see ICS data sheet)

© Danfoss | DCS (MS) | 2019.09

Liquid feed

Application 1: Liquid feed (no hot gas defrost)

Type	# of modules	Appl. #	Connection size		Connection type	Module location						Weight		Code number
			[in.]	[mm]		M1	M2	M3	M4	M5	M6	kg	lbs	
ICF 20	6	1RA	¾	20	Butt-weld ANSI (B 36.10)	ICFS 20	ICFF 20	ICFE 20	ICFO 20	ICFR 20A	ICFS 20	9.5	20.9	027L3004
ICF 20	6	1RA	1	25	Butt-weld ANSI (B 36.10)	ICFS 20	ICFF 20	ICFE 20	ICFO 20	ICFR 20A	ICFS 20	10.1	22.2	027L3373
ICF 25	6	1RB	1¼	32	Butt-weld ANSI (B 36.10)	ICFS 25	ICFF 25	ICFE 25	ICFB 25	ICFR 25B	ICFS 25	23.8	52.4	027L4012
ICF 20	6	1RA	¾	20	Butt-weld DIN-EN 10220	ICFS 20	ICFF 20	ICFE 20	ICFO 20	ICFR 20A	ICFS 20	9.5	20.9	027L3000
ICF 20	6	1RA	1	25	Butt-weld DIN-EN 10220	ICFS 20	ICFF 20	ICFE 20	ICFO 20	ICFR 20A	ICFS 20	9.7	21.3	027L3002
ICF 20	6	1HRB	1	25	Butt-weld DIN-EN 10220	ICFS 20	ICFF 20	ICFE 20H	ICFB 20	ICFR 20B	ICFS 20	10.3	22.7	027L3406
ICF 25	6	1RA	1	25	Butt-weld DIN-EN 10220	ICFS 25	ICFF 25	ICFE 25	ICFB 25	ICFR 25A	ICFS 25	23.6	51.9	027L4002
ICF 20	6	1RA	1¼	32	Butt-weld DIN-EN 10220	ICFS 20	ICFF 20	ICFE 20	ICFO 20	ICFR 20A	ICFS 20	9.7	21.3	027L3003
ICF 20	6	1HRB	1¼	32	Butt-weld DIN-EN 10220	ICFS 20	ICFF 20	ICFE 20H	ICFB 20	ICFR 20B	ICFS 20	10.3	22.7	027L3407
ICF 25	6	1RA	1¼	32	Butt-weld DIN-EN 10220	ICFS 25	ICFF 25	ICFE 25	ICFB 25	ICFR 25A	ICFS 25	23.6	51.9	027L4006
ICF 25	6	1RB	1¼	32	Butt-weld DIN-EN 10220	ICFS 25	ICFF 25	ICFE 25	ICFB 25	ICFR 25B	ICFS 25	23.6	51.9	027L4011
ICF 25	6	1RB	1½	40	Butt-weld DIN-EN 10220	ICFS 25	ICFF 25	ICFE 25	ICFB 25	ICFR 25B	ICFS 25	22.7	49.9	027L4016
ICF 20	6	1RA	¾	20	Socket weld, ANSI (B 16.11)	ICFS 20	ICFF 20	ICFE 20	ICFO 20	ICFR 20A	ICFS 20	10.4	22.9	027L3005
ICF 20	6	1RA	1	25	Socket weld, ANSI (B 16.11)	ICFS 20	ICFF 20E	ICFE 20	ICFO 20	ICFR 20A	ICFS 20	9.9	21.8	027L3007
ICF 20	6	1HRB	1	25	Socket weld, ANSI (B 16.11)	ICFS 20	ICFF 20E	ICFE 20H	ICFB 20	ICFR 20B	ICFS 20	10.9	24.0	027L3408
ICF 25	6	1RA	1	25	Socket weld, ANSI (B 16.11)	ICFS 25	ICFF 25E	ICFE 25	ICFB 25	ICFR 25A	ICFS 25	24.1	53.0	027L4003
ICF 20	6	1RA	1¼	32	Socket weld, ANSI (B 16.11)	ICFS 20	ICFF 20E	ICFE 20	ICFO 20	ICFR 20A	ICFS 20	10.1	22.2	027L3008
ICF 20	6	1HRB	1¼	32	Socket weld, ANSI (B 16.11)	ICFS 20	ICFF 20E	ICFE 20H	ICFB 20	ICFR 20B	ICFS 20	10.9	24.0	027L3409
ICF 25	6	1RA	1¼	32	Socket weld, ANSI (B 16.11)	ICFS 25	ICFF 25E	ICFE 25	ICFB 25	ICFR 25A	ICFS 25	23.8	52.4	027L4008
ICF 25	6	1RB	1¼	32	Socket weld, ANSI (B 16.11)	ICFS 25	ICFF 25E	ICFE 25	ICFB 25	ICFR 25B	ICFS 25	24.2	53.2	027L4013
ICF 25	6	1RB	1½	40	Socket weld, ANSI (B 16.11)	ICFS 25	ICFF 25E	ICFE 25	ICFB 25	ICFR 25B	ICFS 25	23.8	52.4	027L4017

Application 2: Liquid feed

Type	# of Modules	Appl. #	Connection size		Connection type	Module location						Weight		Code number
			[in.]	[mm]		M1	M2	M3	M4	M5	M6	kg	lbs	
ICF 20	6	2RA	¾	20	Butt-weld ANSI (B 36.10)	ICFS 20	ICFF 20	ICFE 20	ICFO 20	ICFR 20A	ICFN 20	9.8	21.6	027L3013
ICF 20	6	2RA	¾	20	Butt-weld DIN-EN 10220	ICFS 20	ICFF 20	ICFE 20	ICFO 20	ICFR 20A	ICFN 20	9.7	21.3	027L3009
ICF 20	6	2RB	¾	20	Butt-weld DIN-EN 10220	ICFS 20	ICFF 20	ICFE 20	ICFO 20	ICFR 20B	ICFN 20	10.2	22.9	027L3398
ICF 20	6	2RB	1	25	Butt-weld DIN-EN 10220	ICFS 20	ICFF 20	ICFE 20	ICFO 20	ICFR 20B	ICFN 20	10.2	22.9	027L3422
ICF 20	6	2RA	1	25	Butt-weld DIN-EN 10220	ICFS 20	ICFF 20	ICFE 20	ICFO 20	ICFR 20A	ICFN 20	9.7	21.3	027L3011
ICF 20	6	2HRB	1	25	Butt-weld DIN-EN 10220	ICFS 20	ICFF 20	ICFE 20H	ICFB 20	ICFR 20B	ICFN 20	9.2	20.2	027L3410
ICF 20	6	2RA	1¼	32	Butt-weld DIN-EN 10220	ICFS 20	ICFF 20	ICFE 20	ICFO 20	ICFR 20A	ICFN 20	9.7	21.3	027L3012
ICF 20	6	2HRB	1¼	32	Butt-weld DIN-EN 10220	ICFS 20	ICFF 20	ICFE 20H	ICFB 20	ICFR 20B	ICFN 20	9.2	20.2	027L3411
ICF 25	6	2RA	1¼	32	Butt-weld DIN-EN 10220	ICFS 25	ICFF 25	ICFE 25	ICFB 25	ICFR 25A	ICFN 25	23.3	51.3	027L4135
ICF 20	6	2RA	¾	20	Socket weld, ANSI (B 16.11)	ICFS 20	ICFF 20E	ICFE 20	ICFO 20	ICFR 20A	ICFN 20	10.1	22.2	027L3014
ICF 20	6	2RA	1	25	Socket weld, ANSI (B 16.11)	ICFS 20	ICFF 20E	ICFE 20	ICFO 20	ICFR 20A	ICFN 20	9.9	21.8	027L3016
ICF 20	6	2HRB	1	25	Socket weld, ANSI (B 16.11)	ICFS 20	ICFF 20E	ICFE 20H	ICFB 20	ICFR 20B	ICFN 20	8.8	19.4	027L3412
ICF 20	6	2RA	1¼	32	Socket weld, ANSI (B 16.11)	ICFS 20	ICFF 20E	ICFE 20	ICFO 20	ICFR 20A	ICFN 20	9.9	21.8	027L3017
ICF 20	6	2HRB	1¼	32	Socket weld, ANSI (B 16.11)	ICFS 20	ICFF 20E	ICFE 20H	ICFB 20	ICFR 20B	ICFN 20	10.9	24.0	027L3413

ICAD and coils are not included and must be ordered separately.
***Please Note**: When used in systems with CO_2, the o-rings on the ICM module can swell (grow). At service, it is therefore recommended to install new o-rings, before the ICM function module is re-installed in the ICF valve body.*

Liquid feed

Application 3: Liquid feed

Type	# of Modules	Appl. #	Connection size		Connection type	Module location						Weight		Code number
			[in.]	[mm]		M1	M2	M3	M4	M5	M6	kg	lbs	
ICF 20	6	3RA	¾	20	Butt-weld ANSI (B 36.10)	ICFS 20	ICFF 20	ICFE 20	ICFC 20	ICFR 20A	ICFS 20	9.9	21.8	027L3022
ICF 20	6	3RA	1	25	Butt-weld ANSI (B 36.10)	ICFS 20	ICFF 20	ICFE 20	ICFC 20	ICFR 20A	ICFS 20	9.9	21.8	027L3419
ICF 20	6	3RA	¾	20	Butt-weld DIN-EN 10220	ICFS 20	ICFF 20	ICFE 20	ICFC 20	ICFR 20A	ICFS 20	9.6	21.1	027L3018
ICF 20	6	3RB	¾	20	Butt-weld DIN-EN 10220	ICFS 20	ICFF 20	ICFE 20	ICFC 20	ICFR 20B	ICFS 20	10.4	22.9	027L3433
ICF 20	6	3RA	1	25	Butt-weld DIN-EN 10220	ICFS 20	ICFF 20E	ICFE 20	ICFC 20	ICFR 20A	ICFS 20	10.0	22.0	027L3437
ICF 20	6	3HRB	1	25	Butt-weld DIN-EN 10220	ICFS 20	ICFF 20	ICFE 20H	ICFC 20	ICFR 20B	ICFS 20	10.6	23.3	027L3414
ICF 25	6	3RA	1	25	Butt-weld DIN-EN 10220	ICFS 25	ICFF 25	ICFE 25	ICFC 25	ICFR 25A	ICFS 25	23.4	51.5	027L4020
ICF 20	6	3RA	1¼	32	Butt-weld DIN-EN 10220	ICFS 20	ICFF 20	ICFE 20	ICFC 20	ICFR 20A	ICFS 20	10.4	22.9	027L3021
ICF 20	6	3HRB	1¼	32	Butt-weld DIN-EN 10220	ICFS 20	ICFF 20	ICFE 20H	ICFC 20	ICFR 20B	ICFS 20	10.6	23.3	027L3415
ICF 25	6	3RA	1¼	32	Butt-weld DIN-EN 10220	ICFS 25	ICFF 25	ICFE 25	ICFC 25	ICFR 25A	ICFS 25	23.2	51.0	027L4024
ICF 20	6	3RB	1¼	32	Butt-weld DIN-EN 10220	ICFS 20	ICFF 20	ICFE 20	ICFC 20	ICFR 20B	ICFS 20	10.4	22.9	027L3430
ICF 25	6	3RB	1¼	32	Butt-weld DIN-EN 10220	ICFS 25	ICFF 25	ICFE 25	ICFC 25	ICFR 25B	ICFS 25	23.8	52.4	027L4029
ICF 25	6	3RB	1½	40	Butt-weld DIN-EN 10220	ICFS 25	ICFF 25	ICFE 25	ICFC 25	ICFR 25B	ICFS 25	24.0	52.8	027L4034
ICF 20	6	3RA	¾	20	Socket weld, ANSI (B 16.11)	ICFS 20	ICFF 20E	ICFE 20	ICFC 20	ICFR 20A	ICFS 20	10.0	22.0	027L3023
ICF 20	6	3HRB	¾	20	Socket weld, ANSI (B 16.11)	ICFS 20	ICFF 20E	ICFE 20H	ICFC 20	ICFR 20B	ICFS 20	10.7	23.5	027L3418
ICF 20	6	3RA	1	25	Socket weld, ANSI (B 16.11)	ICFS 20	ICFF 20E	ICFE 20	ICFC 20	ICFR 20A	ICFS 20	10.0	22.0	027L3025
ICF 20	6	3HRB	1	25	Socket weld, ANSI (B 16.11)	ICFS 20	ICFF 20E	ICFE 20H	ICFC 20	ICFR 20B	ICFS 20	11.2	24.6	027L3416
ICF 25	6	3RA	1	25	Socket weld, ANSI (B 16.11)	ICFS 25	ICFF 25E	ICFE 25	ICFC 25	ICFR 25A	ICFS 25	24.2	53.2	027L4021
ICF 20	6	3RA	1¼	32	Socket weld, ANSI (B 16.11)	ICFS 20	ICFF 20E	ICFE 20	ICFC 20	ICFR 20A	ICFS 20	10.1	22.2	027L3026
ICF 20	6	3HRB	1¼	32	Socket weld, ANSI (B 16.11)	ICFS 20	ICFF 20E	ICFE 20H	ICFC 20	ICFR 20B	ICFS 20	11.3	24.9	027L3417
ICF 25	6	3RA	1¼	32	Socket weld, ANSI (B 16.11)	ICFS 25	ICFF 25E	ICFE 25	ICFC 25	ICFR 25A	ICFS 25	24.1	53.0	027L4026
ICF 25	6	3RB	1¼	32	Socket weld, ANSI (B 16.11)	ICFS 25	ICFF 25E	ICFE 25	ICFC 25	ICFR 25B	ICFS 25	24.1	53.0	027L4031
ICF 25	6	3RB	1½	40	Socket weld, ANSI (B 16.11)	ICFS 25	ICFF 25E	ICFE 25	ICFC 25	ICFR 25B	ICFS 25	24.2	53.2	027L4035

** Fixed module*
ICAD and coils are not included and must be ordered separately.
***Please Note**: When used in systems with CO_2, the o-rings on the ICM module can swell (grow). At service, it is therefore recommended to install new o-rings, before the ICM function module is re-installed in the ICF valve body.*

© Danfoss | DCS (MS) | 2019.09

Liquid feed

Application 10: Liquid feed (no hot gas defrost)

Type	# of Modules	Appl. #	Connection size		Connection type	Module location					Weight		Code number
			[in.]	[mm]		M1	M2	M3	M4		kg	lbs	
ICF 15	4	10HRB	¾	20	Butt-weld ANSI (B 36.10)	ICFS 15*	ICFF 15*	ICFE 20H	ICFR 20B		7.0	15.4	027L4585
ICF 20	4	10RA	¾	20	Butt-weld ANSI (B 36.10)	ICFS 20	ICFF 20	ICFE 20	ICFR 20A		6.6	14.5	027L3077
ICF 25	4	10RA	1¼	32	Butt-weld ANSI (B 36.10)	ICFS 25	ICFF 25	ICFE 25	ICFR 25A		16.1	35.4	027L4081
ICF 15	4	10RA	½	15	Butt-weld DIN-EN 10220	ICFS 15*	ICFF 15*	ICFE 20	ICFR 20A		6.3	13.8	027L4548
ICF 15	4	10RB	½	15	Butt-weld DIN-EN 10220	ICFS 15*	ICFF 15*	ICFE 20	ICFR 20B		6.3	13.8	027L4544
ICF 15	4	10HRA	½	15	Butt-weld DIN-EN 10220	ICFS 15*	ICFF 15*	ICFE 20H	ICFR 20A		7.0	15.4	027L4552
ICF 15	4	10HRB	½	15	Butt-weld DIN-EN 10220	ICFS 15*	ICFF 15*	ICFE 20H	ICFR 20B		7.0	15.4	027L4549
ICF 15	4	10RA	¾	20	Butt-weld DIN-EN 10220	ICFS 15*	ICFF 15*	ICFE 20	ICFR 20A		6.3	13.8	027L4545
ICF 15	4	10RB	¾	20	Butt-weld DIN-EN 10220	ICFS 15*	ICFF 15*	ICFE 20	ICFR 20B		6.3	13.8	027L4540
ICF 15	4	10HRB	¾	20	Butt-weld DIN-EN 10220	ICFS 15*	ICFF 15*	ICFE 20H	ICFR 20B		7.0	15.4	027L4524
ICF 20	4	10RA	¾	20	Butt-weld DIN-EN 10220	ICFS 20	ICFF 20	ICFE 20	ICFR 20A		6.7	14.7	027L3073
ICF 20	4	10HRB	¾	20	Butt-weld DIN-EN 10220	ICFS 20	ICFF 20	ICFE 20H	ICFR 20B		7.9	17.4	027L3383
ICF 20	4	10RA	1	25	Butt-weld DIN-EN 10220	ICFS 20	ICFF 20	ICFE 20	ICFR 20A		7.2	15.8	027L3075
ICF 20	4	10RB	1	25	Butt-weld DIN-EN 10220	ICFS 20	ICFF 20	ICFE 20	ICFR 20B		7.2	15.8	027L3431
ICF 20	4	10HRB	1	25	Butt-weld DIN-EN 10220	ICFS 20	ICFF 20	ICFE 20H	ICFR 20B		7.9	17.4	027L3400
ICF 25	4	10RA	1	25	Butt-weld DIN-EN 10220	ICFS 25	ICFF 25	ICFE 25	ICFR 25A		15.9	35.0	027L4076
ICF 25	4	10RB	1	25	Butt-weld DIN-EN 10220	ICFS 25	ICFF 25	ICFE 25	ICFR 25B		15.9	35.0	027L4169
ICF 25	4	10RB	1	25	Butt-weld DIN-EN 10220	ICFS 25	ICFF 25E	ICFE 25	ICFR 25B		16.2	35.6	027L4187
ICF 20	4	10RA	1¼	32	Butt-weld DIN-EN 10220	ICFS 20	ICFF 20	ICFE 20	ICFR 20A		6.7	14.7	027L3076
ICF 20	4	10HRB	1¼	32	Butt-weld DIN-EN 10220	ICFS 20	ICFF 20	ICFE 20H	ICFR 20B		7.9	17.4	027L3401
ICF 25	4	10RA	1¼	32	Butt-weld DIN-EN 10220	ICFS 25	ICFF 25	ICFE 25	ICFR 25A		15.8	34.8	027L4080
ICF 25	4	10RB	1¼	32	Butt-weld DIN-EN 10220	ICFS 25	ICFF 25	ICFE 25	ICFR 25B		15.4	33.9	027L4085
ICF 25	4	10RB	1½	40	Butt-weld DIN-EN 10220	ICFS 25	ICFF 25	ICFE 25	ICFR 25B		15.8	34.8	027L4090
ICF 15	4	10RA	½	15	Socket weld, ANSI (B 16.11)	ICFS 15*	ICFF 15*	ICFE 20	ICFR 20A		6.3	13.8	027L4586
ICF 15	4	10HRB	½	15	Socket weld, ANSI (B 16.11)	ICFS 15*	ICFF 15*	ICFE 20H	ICFR 20B		7.0	15.4	027L4530
ICF 15	4	10RA	¾	20	Socket weld, ANSI (B 16.11)	ICFS 15*	ICFF 15*	ICFE 20	ICFR 20A		6.3	13.8	027L4625
ICF 15	4	10HRB	¾	20	Socket weld, ANSI (B 16.11)	ICFS 15*	ICFF 15*	ICFE 20H	ICFR 20B		7.0	15.4	027L4615
ICF 20	4	10RA	¾	20	Socket weld, ANSI (B 16.11)	ICFS 20	ICFF 20E	ICFE 20	ICFR 20A		7.0	15.4	027L3078
ICF 20	4	10HRB	¾	20	Socket weld, ANSI (B 16.11)	ICFS 20	ICFF 20E	ICFE 20H	ICFR 20B		8.4	18.5	027L3404
ICF 20	4	10RA	1	25	Socket weld, ANSI (B 16.11)	ICFS 20	ICFF 20E	ICFE 20	ICFR 20A		6.9	15.2	027L3080
ICF 20	4	10HRB	1	25	Socket weld, ANSI (B 16.11)	ICFS 20	ICFF 20E	ICFE 20H	ICFR 20B		7.8	17.2	027L3402
ICF 25	4	10RA	1	25	Socket weld, ANSI (B 16.11)	ICFS 25	ICFF 25E	ICFE 25	ICFR 25A		15.8	34.8	027L4077
ICF 20	4	10RA	1¼	32	Socket weld, ANSI (B 16.11)	ICFS 20	ICFF 20E	ICFE 20	ICFR 20A		7.0	15.4	027L3081
ICF 20	4	10HRB	1¼	32	Socket weld, ANSI (B 16.11)	ICFS 20	ICFF 20E	ICFE 20H	ICFR 20B		8.1	17.8	027L3403
ICF 25	4	10RA	1¼	32	Socket weld, ANSI (B 16.11)	ICFS 25	ICFF 25E	ICFE 25	ICFR 25A		12.7	27.9	027L4082
ICF 25	4	10RB	1¼	32	Socket weld, ANSI (B 16.11)	ICFS 25	ICFF 25E	ICFE 25	ICFR 25B		16.2	35.6	027L4087
ICF 25	4	10RB	1½	40	Socket weld, ANSI (B 16.11)	ICFS 25	ICFF 25E	ICFE 25	ICFR 25B		16.2	35.6	027L4091

** Fixed module*
ICAD and coils are not included and must be ordered separately.
***Please Note**: When used in systems with CO_2, the o-rings on the ICM module can swell (grow). At service, it is therefore recommended to install new o-rings, before the ICM function module is re-installed in the ICF valve body.*

Liquid feed

Application 15: Liquid feed with external connection

Type	# of Modules	Appl. #	Connection size		Connection type	Module location						Weight		Code number
			[in.]	[mm]		M1	M2	M3	M4	M5	M6	kg	lbs	
ICF 20	6	15RA	1	25	Butt-weld DIN-EN 10220	ICFS 20	ICFF 20	ICFE 20	ICFC 20	ICFW 20D	ICFR 20A	9.1	20.0	027L3157
ICF 20	6	15RB	1	25	Butt-weld DIN-EN 10220	ICFS 20	ICFF 20	ICFE 20	ICFC 20	ICFW 20D	ICFR 20B	9.1	20.0	027L3434
ICF 25	6	15RA	1	25	Butt-weld DIN-EN 10220	ICFS 25	ICFF 25	ICFE 25	ICFC 25	ICFW 25D	ICFR 25A	21.8	48.0	027L4121
ICF 25	6	15RB	1¼	32	Butt-weld DIN-EN 10220	ICFS 25	ICFF 25	ICFE 25	ICFC 25	ICFW 25D	ICFR 25B	22.7	49.9	027L4126
ICF 25	6	15RB	1½	40	Butt-weld DIN-EN 10220	ICFS 25	ICFF 25	ICFE 25	ICFC 25	ICFW 25D	ICFR 25B	21.9	48.2	027L4130
ICF 25	6	15RA	1	25	Socket weld, ANSI (B 16.11)	ICFS 25	ICFF 25E	ICFE 25	ICFC 25	ICFW 25S	ICFR 25A	23.5	51.7	027L4122
ICF 25	6	15RB	1¼	32	Socket weld, ANSI (B 16.11)	ICFS 25	ICFF 25E	ICFE 25	ICFC 25	ICFW 25S	ICFR 25B	23.6	51.9	027L4127
ICF 25	6	15RB	1½	40	Socket weld, ANSI (B 16.11)	ICFS 25	ICFF 25E	ICFE 25	ICFC 25	ICFW 25S	ICFR 25B	23.7	52.1	027L4131

Solenoid common

Application 4: Solenoid - Liquid & hot gas lines

Type	# of Modules	Appl. #	Connection size		Connection type	Module location						Weight		Code number
			[in.]	[mm]		M1	M2	M3	M4	M5	M6	kg	lbs	
ICF 20	6	4	1	25	Butt-weld DIN-EN 10220	ICFS 20	ICFF 20	ICFE 20	ICFO 20	ICFB 20	ICFS 20	9.2	20.2	027L3028
ICF 20	6	4	1¼	32	Butt-weld DIN-EN 10220	ICFS 20	ICFF 20	ICFE 20	ICFO 20	ICFB 20	ICFS 20	9.2	20.2	027L3029
ICF 20	6	4	¾	20	Socket weld, ANSI (B 16.11)	ICFS 20	ICFF 20E	ICFE 20	ICFO 20	ICFB 20	ICFS 20	9.4	20.7	027L3124
ICF 20	6	4	1	25	Socket weld, ANSI (B 16.11)	ICFS 20	ICFF 20E	ICFE 20	ICFO 20	ICFB 20	ICFS 20	9.3	20.5	027L3032
ICF 20	6	4	1¼	32	Socket weld, ANSI (B 16.11)	ICFS 20	ICFF 20E	ICFE 20	ICFO 20	ICFB 20	ICFS 20	9.5	20.9	027L3033

Application 8: Solenoid - Liquid & hot gas lines

Type	# of Modules	Appl. #	Connection size		Connection type	Module location						Weight		Code number
			[in.]	[mm]		M1	M2	M3	M4	M5	M6	kg	lbs	
ICF 15	4	8	½	15	Butt-weld ANSI (B 36.10)	ICFS 15*	ICFF 15*	ICFE 20	ICFO 20			5.7	12.6	027L4533
ICF 15	4	8	¾	20	Butt-weld ANSI (B 36.10)	ICFS 15*	ICFF 15*	ICFE 20	ICFO 20			5.7	12.6	027L4535
ICF 20	4	8	¾	20	Butt-weld ANSI (B 36.10)	ICFS 20	ICFF 20	ICFE 20	ICFO 20			6.3	13.9	027L3062
ICF 15	4	8	½	15	Butt-weld DIN-EN 10220	ICFS 15*	ICFF 15*	ICFE 20	ICFO 20			5.7	12.6	027L4532
ICF 15	4	8	½	15	Butt-weld DIN-EN 10220	ICFS 15*	ICFF 15*	ICFE 20	ICFN 20			6.8	15.0	027L4579
ICF 15	4	8	¾	20	Butt-weld DIN-EN 10220	ICFS 15*	ICFF 15*	ICFE 20	ICFO 20			5.7	12.6	027L4520
ICF 15	4	8	¾	20	Butt-weld DIN-EN 10220	ICFS 15*	ICFF 15*	ICFE 20	ICFN 20			6.8	15.0	027L4574
ICF 20	4	8	1	25	Butt-weld DIN-EN 10220	ICFS 20	ICFF 20	ICFE 20	ICFO 20			7.2	15.8	027L3060
ICF 25	4	8	1	25	Butt-weld DIN-EN 10220	ICFS 25	ICFF 25	ICFE 25	ICFB 25			12.4	27.3	027L4054
ICF 20	4	8	1¼	32	Butt-weld DIN-EN 10220	ICFS 20	ICFF 20	ICFE 20	ICFO 20			6.3	13.9	027L3061
ICF 25	4	8	1¼	32	Butt-weld DIN-EN 10220	ICFS 25	ICFF 25	ICFE 25	ICFB 25			14.5	31.9	027L4133
ICF 25	4	8	1½	40	Butt-weld DIN-EN 10220	ICFS 25	ICFF 25	ICFE 25	ICFB 25			14.5	31.9	027L4059
ICF 15	4	8	½	15	Pipe thread (ANSI B 1.20.1)	ICFS 15*	ICFF 15*	ICFE 20	ICFO 20			5.7	12.6	027L4534
ICF 15	4	8	½	15	Socket weld, ANSI (B 16.11)	ICFS 15*	ICFF 15*	ICFE 20	ICFO 20			5.7	12.6	027L4526
ICF 15	4	8	¾	20	Socket weld, ANSI (B 16.11)	ICFS 15*	ICFF 15*	ICFE 20	ICFO 20			5.7	12.6	027L4611
ICF 20	4	8	¾	20	Socket weld, ANSI (B 16.11)	ICFS 20	ICFF 20E	ICFE 20	ICFO 20			6.6	14.5	027L3366
ICF 20	4	8	1	25	Socket weld, ANSI (B 16.11)	ICFS 20	ICFF 20E	ICFE 20	ICFO 20			6.7	14.7	027L3064
ICF 20	4	8	1¼	32	Socket weld, ANSI (B 16.11)	ICFS 20	ICFF 20E	ICFE 20	ICFO 20			6.7	14.7	027L3065
ICF 15	4	8	⅞	22	Solder ANSI B 16.22	ICFS 15*	ICFF 15*	ICFE 20	ICFO 20			5.7	12.6	027L4536
ICF 15	4	8	⅞	22	Solder DIN-EN1254-1	ICFS 15*	ICFF 15*	ICFE 20	ICFO 20			5.7	12.6	027L4537

** Fixed module*
ICAD and coils are not included and must be ordered separately.
***Please Note**: When used in systems with CO_2, the o-rings on the ICM module can swell (grow). At service, it is therefore recommended to install new o-rings, before the ICM function module is re-installed in the ICF valve body.*

© Danfoss | DCS (MS) | 2019.09

Liquid injection

Application 5: Liquid injection (expansion)

Type	# of modules	Appl. #	Connection size		Connection type	Module location						Weight		Code number
			[in.]	[mm]		M1	M2	M3	M4	M5	M6	kg	lbs	
ICF 20	6	5MA	¾	20	Butt-weld ANSI (B 36.10)	ICFS 20	ICFF 20	ICFE 20	ICFO 20	ICM 20-A	ICFS 20	9.6	21.1	027L3037
ICF 20	6	5MB	¾	20	Butt-weld ANSI (B 36.10)	ICFS 20	ICFF 20	ICFE 20	ICFO 20	ICM 20-B	ICFS 20	9.9	21.8	027L3043
ICF 25	6	5MA	1¼	32	Butt-weld ANSI (B 36.10)	ICFS 25	ICFF 25	ICFE 25	ICFB 25	ICM 25-A	ICFS 25	23.0	50.6	027L4043
ICF 20	6	5MA33	¾	20	Butt-weld DIN-EN 10220	ICFS 20	ICFF 20	ICFE 20	ICFO 20	ICM 20-A33	ICFS 20	10.1	22.2	027L3367
ICF 20	6	5MA33	¾	20	Butt-weld DIN-EN 10220	ICFS 20	ICFF 20-74	ICFE 20	ICFO 20	ICM 20-A33	ICFS 20	9.8	21.6	027L3151
ICF 20	6	5MA	¾	20	Butt-weld DIN-EN 10220	ICFS 20	ICFF 20	ICFE 20	ICFO 20	ICM 20-A	ICFS 20	9.8	21.6	027L3034
ICF 20	6	5MA	¾	20	Butt-weld DIN-EN 10220	ICFS 20	ICFF 20-74	ICFE 20	ICFO 20	ICM 20-A	ICFS 20	9.8	21.6	027L3147
ICF 20	6	5MB	¾	20	Butt-weld DIN-EN 10220	ICFS 20	ICFF 20	ICFE 20	ICFO 20	ICM 20-B	ICFS 20	9.8	21.6	027L3145
ICF 20	6	5MB66	¾	20	Butt-weld DIN-EN 10220	ICFS 20	ICFF 20	ICFE 20	ICFO 20	ICM 20-B66	ICFS 20	9.6	21.1	027L3161
ICF 20	6	5MC	¾	20	Butt-weld DIN-EN 10220	ICFS 20	ICFF 20	ICFE 20	ICFO 20	ICM 20-C	ICFS 20	9.9	21.8	027L3432
ICF 20	6	5MA33	1	25	Butt-weld DIN-EN 10220	ICFS 20	ICFF 20	ICFE 20	ICFO 20	ICM 20-A33	ICFS 20	10.1	22.2	027L3388
ICF 20	6	5MA33	1	25	Butt-weld DIN-EN 10220	ICFS 20	ICFF 20-74	ICFE 20	ICFO 20	ICM 20-A33	ICFS 20	9.6	21.1	027L3153
ICF 20	6	5MA	1	25	Butt-weld DIN-EN 10220	ICFS 20	ICFF 20	ICFE 20	ICFO 20	ICM 20-A	ICFS 20	9.8	21.6	027L3036
ICF 20	6	5HMA	1	25	Butt-weld DIN-EN 10220	ICFS 20	ICFF 20	ICFE 20H	ICFB 20	ICM 20-A	ICFS 20	10.4	22.9	027L3322
ICF 20	6	5MA	1	25	Butt-weld DIN-EN 10220	ICFS 20	ICFF 20-74	ICFE 20	ICFO 20	ICM 20-A	ICFS 20	9.8	21.6	027L3148
ICF 20	6	5MB	1	25	Butt-weld DIN-EN 10220	ICFS 20	ICFF 20	ICFE 20	ICFO 20	ICM 20-B	ICFS 20	9.6	21.1	027L3042
ICF 20	6	5MB	1	25	Butt-weld DIN-EN 10220	ICFS 20	ICFF 20-74	ICFE 20	ICFO 20	ICM 20-B	ICFS 20	9.8	21.6	027L3149
ICF 20	6	5HMB	1	25	Butt-weld DIN-EN 10220	ICFS 20	ICFF 20	ICFE 20H	ICFB 20	ICM 20-B	ICFS 20	11.4	25.1	027L3325
ICF 20	6	5MB66	1	25	Butt-weld DIN-EN 10220	ICFS 20	ICFF 20	ICFE 20	ICFO 20	ICM 20-B66	ICFS 20	10.5	23.1	027L3389
ICF 20	6	5MC	1	25	Butt-weld DIN-EN 10220	ICFS 20	ICFF 20	ICFE 20	ICFO 20	ICM 20-C	ICFS 20	9.9	21.8	027L3047
ICF 20	6	5HMC	1	25	Butt-weld DIN-EN 10220	ICFS 20	ICFF 20	ICFE 20H	ICFB 20	ICM 20-C	ICFS 20	11.4	25.1	027L3328
ICF 25	6	5MA	1	25	Butt-weld DIN-EN 10220	ICFS 25	ICFF 25	ICFE 25	ICFB 25	ICM 25-A	ICFS 25	22.8	50.2	027L4038
ICF 25	6	5MA33	1¼	32	Butt-weld DIN-EN 10220	ICFS 25	ICFF 25	ICFE 25	ICFB 25	ICM 25-A33	ICFS 25	23.0	50.6	027L4171
ICF 20	6	5MB66	1¼	32	Butt-weld DIN-EN 10220	ICFS 20	ICFF 20	ICFE 20	ICFO 20	ICM 20-B66	ICFS 20	9.6	21.1	027L3374
ICF 20	6	5MC	1¼	32	Butt-weld DIN-EN 10220	ICFS 20	ICFF 20	ICFE 20	ICFO 20	ICM 20-C	ICFS 20	9.8	21.6	027L3048
ICF 20	6	5HMB	1¼	32	Butt-weld DIN-EN 10220	ICFS 20	ICFF 20	ICFE 20-H	ICFB 20	ICM 20-B	ICFS 20	10.3	22.7	027L3390
ICF 20	6	5HMC	1¼	32	Butt-weld DIN-EN 10220	ICFS 20	ICFF 20	ICFE 20H	ICFB 20	ICM 20-C	ICFS 20	10.3	22.7	027L3329
ICF 25	6	5MA	1¼	32	Butt-weld DIN-EN 10220	ICFS 25	ICFF 25	ICFE 25	ICFB 25	ICM 25-A	ICFS 25	23.0	50.6	027L4042
ICF 25	6	5MB	1¼	32	Butt-weld DIN-EN 10220	ICFS 25	ICFF 25	ICFE 25	ICFB 25	ICM 25-B	ICFS 25	22.0	48.5	027L4047
ICF 25	6	5MA	1½	40	Butt-weld DIN-EN 10220	ICFS 25	ICFF 25E	ICFE 25	ICFB 25	ICM 25-A	ICFS 25	21.9	48.2	027L4148
ICF 25	6	5MA	1½	40	Butt-weld DIN-EN 10220	ICFS 25	ICFF 25	ICFE 25	ICFB 25	ICM 25-A	ICFS 25	22.2	48.9	027L4174
ICF 25	6	5MA33	1½	40	Butt-weld DIN-EN 10220	ICFS 25	ICFF 25	ICFE 25	ICFB 25	ICM 25-A33	ICFS 25	22.2	48.9	027L4170
ICF 25	6	5MB	1½	40	Butt-weld DIN-EN 10220	ICFS 25	ICFF 25	ICFE 25	ICFB 25	ICM 25-B	ICFS 25	22.2	48.9	027L4052
ICF 20	6	5MA33	¾	20	Socket weld, ANSI (B 16.11)	ICFS 20	ICFF 20E	ICFE 20	ICFO 20	ICM 20-A33	ICFS 20	10.1	22.2	027L3154
ICF 20	6	5MA	¾	20	Socket weld, ANSI (B 16.11)	ICFS 20	ICFF 20E	ICFE 20	ICFO 20	ICM 20-A	ICFS 20	10.0	22.0	027L3038
ICF 20	6	5MB66	¾	20	Socket weld, ANSI (B 16.11)	ICFS 20	ICFF 20E	ICFE 20	ICFO 20	ICM 20-B66	ICFS 20	10.5	23.1	027L3159
ICF 20	6	5MB	¾	20	Socket weld, ANSI (B 16.11)	ICFS 20	ICFF 20E	ICFE 20	ICFO 20	ICM 20-B	ICFS 20	9.8	21.6	027L3127
ICF 20	6	5MA33	1	25	Socket weld, ANSI (B 16.11)	ICFS 20	ICFF 20-E	ICFE 20	ICFO 20	ICM 20-A33	ICFS 20	10.1	22.2	027L3391
ICF 20	6	5MA	1	25	Socket weld, ANSI (B 16.11)	ICFS 20	ICFF 20E	ICFE 20	ICFO 20	ICM 20-A	ICFS 20	10.1	22.2	027L3040
ICF 20	6	5HMA	1	25	Socket weld, ANSI (B 16.11)	ICFS 20	ICFF 20E	ICFE 20H	ICFB 20	ICM 20-A	ICFS 20	11.4	25.1	027L3323
ICF 20	6	5MB66	1	25	Socket weld, ANSI (B 16.11)	ICFS 20	ICFF 20E	ICFE 20	ICFO 20	ICM 20-B66	ICFS 20	10.5	23.1	027L3160
ICF 20	6	5MB	1	25	Socket weld, ANSI (B 16.11)	ICFS 20	ICFF 20E	ICFE 20	ICFO 20	ICM 20-B	ICFS 20	10.0	22.0	027L3045
ICF 20	6	5HMB	1	25	Socket weld, ANSI (B 16.11)	ICFS 20	ICFF 20E	ICFE 20H	ICFB 20	ICM 20-B	ICFS 20	11.0	24.2	027L3326
ICF 20	6	5MC	1	25	Socket weld, ANSI (B 16.11)	ICFS 20	ICFF 20E	ICFE 20	ICFO 20	ICM 20-C	ICFS 20	10.0	22.0	027L3051
ICF 20	6	5HMC	1	25	Socket weld, ANSI (B 16.11)	ICFS 20	ICFF 20E	ICFE 20H	ICFB 20	ICM 20-C	ICFS 20	10.0	22.0	027L3330
ICF 25	6	5MA	1	25	Socket weld, ANSI (B 16.11)	ICFS 25	ICFF 25E	ICFE 25	ICFB 25	ICM 25-A	ICFS 25	23.1	50.8	027L4039
ICF 25	6	5MA33	1¼	32	Socket weld, ANSI (B 16.11)	ICFS 25	ICFF 25-E	ICFE 25	ICFB 25	ICM 25-A33	ICFS 25	22.0	48.5	027L4173
ICF 25	6	5MA	1¼	32	Socket weld, ANSI (B 16.11)	ICFS 25	ICFF 25E	ICFE 25	ICFB 25	ICM 25-A	ICFS 25	23.2	51.0	027L4044
ICF 20	6	5MB66	1¼	32	Socket weld, ANSI (B 16.11)	ICFS 20	ICFF 20-E	ICFE 20	ICFO 20	ICM 20-B66	ICFS 20	10.5	23.1	027L3392
ICF 25	6	5MB	1¼	32	Socket weld, ANSI (B 16.11)	ICFS 25	ICFF 25-E	ICFE 25	ICFB 25	ICM 25-B	ICFS 25	23.2	51.1	027L4049
ICF 20	6	5MC	1¼	32	Socket weld, ANSI (B 16.11)	ICFS 20	ICFF 20E	ICFE 20	ICFO 20	ICM 20-C	ICFS 20	10.1	22.2	027L3052
ICF 20	6	5HMB	1¼	32	Socket weld, ANSI (B 16.11)	ICFS 20	ICFF 20-E	ICFE 20-H	ICFB 20	ICM 20-B	ICFS 20	11.0	24.2	027L3393
ICF 25	6	5MA	1½	40	Socket weld, ANSI (B 16.11)	ICFS 20	ICFF 20E	ICFE 20H	ICFB 20	ICM 20-C	ICFS 20	11.0	24.2	027L3331
ICF 25	6	5MA33	1½	40	Socket weld, ANSI (B 16.11)	ICFS 25	ICFF 25-E	ICFE 25	ICFB 25	ICM 25-A33	ICFS 25	22.0	48.5	027L4172
ICF 25	6	5MA	1½	40	Socket weld, ANSI (B 16.11)	ICFS 25	ICFF 25-E	ICFE 25	ICFB 25	ICM 25-A33	ICFS 25	23.1	50.8	027L4132
ICF 25	6	5MB	1½	40	Socket weld, ANSI (B 16.11)	ICFS 25	ICFF 25-E	ICFE 25	ICFB 25	ICM 25-B	ICFS 25	23.2	51.1	027L4053

ICAD and coils are not included and must be ordered separately.
***Please Note**: When used in systems with CO_2, the o-rings on the ICM module can swell (grow). At service, it is therefore recommended to install new o-rings, before the ICM function module is re-installed in the ICF valve body.*

Liquid injection

Application 12: Liquid injection (expansion) PWM

Type	# of modules	Appl. #	Connection size		Connection type	Module location						Weight		Code number
			[in.]	[mm]		M1	M2	M3	M4	M5	M6	kg	lbs	
ICF 15	4	12	¾	20	Butt-weld ANSI (B 36.10)	ICFS 15*	ICFF 15*	ICFA 20	ICFS 20			6.2	13.7	027L4556
ICF 15	4	12	½	15	Butt-weld DIN-EN 10220	ICFS 15*	ICFF 15*	ICFA 20	ICFS 20			6.2	13.7	027L4573
ICF 15	4	12	¾	20	Butt-weld DIN-EN 10220	ICFS 15*	ICFF 15*	ICFA 20	ICFS 20			6.2	13.7	027L4522
ICF 20	4	12	¾	20	Butt-weld DIN-EN 10220	ICFS 20	ICFF 20	ICFA 20	ICFS 20			6.8	15.0	027L3089
ICF 15	4	12	½	15	Socket weld, ANSI (B 16.11)	ICFS 15*	ICFF 15*	ICFA 20	ICFS 20			6.2	13.7	027L4528
ICF 15	4	12	¾	20	Socket weld, ANSI (B 16.11)	ICFS 15*	ICFF 15*	ICFA 20	ICFS 20			6.2	13.7	027L4613
ICF 20	4	12	¾	20	Socket weld, ANSI (B 16.11)	ICFS 20	ICFF 20E	ICFA 20	ICFS 20			6.8	15.0	027L3091

Application 14: Liquid injection (expansion)

Type	# of modules	Appl. #	Connection size		Connection type	Module location						Weight		Code number
			[in.]	[mm]		M1	M2	M3	M4	M5	M6	kg	lbs	
ICF 15	4	14MA	½	15	Butt-weld DIN-EN 10220	ICFS 15*	ICFF 15*	ICM 20-A	ICFS 20			6.8	15.0	027L4551
ICF 15	4	14MB	½	15	Butt-weld DIN-EN 10220	ICFS 15*	ICFF 15*	ICM 20-B	ICFS 20			6.8	15.0	027L4559
ICF 20	4	14MA33	¾	20	Butt-weld DIN-EN 10220	ICFS 20	ICFF 20	ICM 20-A33	ICFS 20			7.3	16.1	027L3394
ICF 15	4	14MA	¾	20	Butt-weld DIN-EN 10220	ICFS 15*	ICFF 15*	ICM 20-A	ICFS 20			6.8	15.0	027L4525
ICF 20	4	14MA	¾	20	Butt-weld DIN-EN 10220	ICFS 20	ICFF 20	ICM 20-A	ICFS 20			7.3	16.1	027L3095
ICF 15	4	14MB66	¾	20	Butt-weld DIN-EN 10220	ICFS 15*	ICFF 15*	ICM 20-B66	ICFS 20			6.8	15.0	027L4553
ICF 20	4	14MB66	¾	20	Butt-weld DIN-EN 10220	ICFS 20	ICFF 20	ICM 20-B66	ICFS 20			7.2	15.8	027L4155
ICF 15	4	14MB	¾	20	Butt-weld DIN-EN 10220	ICFS 15*	ICFF 15*	ICM 20-B	ICFS 20			6.8	15.0	027L4560
ICF 20	4	14 MA33	1	25	Butt-weld DIN-EN 10220	ICFS 20	ICFF 20	ICM 20-A33	ICFS 20			6.6	14.5	027L3365
ICF 20	4	14MA	1	25	Butt-weld DIN-EN 10220	ICFS 20	ICFF 20	ICM 20-A	ICFS 20			7.3	16.1	027L3097
ICF 20	4	14MB66	1	25	Butt-weld DIN-EN 10220	ICFS 20	ICFF 20	ICM 20-B66	ICFS 20			7.2	15.8	027L3356
ICF 20	4	14MB	1	25	Butt-weld DIN-EN 10220	ICFS 20	ICFF 20	ICM 20-B	ICFS 20			7.2	15.8	027L3103
ICF 20	4	14MC	1	25	Butt-weld DIN-EN 10220	ICFS 20	ICFF 20	ICM 20-C	ICFS 20			7.2	15.8	027L3108
ICF 25	4	14MA	1	25	Butt-weld DIN-EN 10220	ICFS 25	ICFF 25	ICM 25-A	ICFS 25			15.5	34.1	027L4103
ICF 20	4	14MC	1¼	32	Butt-weld DIN-EN 10220	ICFS 20	ICFF 20	ICM 20-C	ICFS 20			7.3	16.1	027L3109
ICF 25	4	14MB	1¼	32	Butt-weld DIN-EN 10220	ICFS 25	ICFF 25	ICM 25-B	ICFS 25			14.4	31.7	027L4112
ICF 25	4	14MA	1¼	32	Butt-weld DIN-EN 10220	ICFS 25	ICFF 25	ICM 25-A	ICFS 25			15.4	33.9	027L4107
ICF 25	4	14MA	1½	40	Butt-weld DIN-EN 10220	ICFS 25	ICFF 25	ICM 25-A	ICFS 25			15.3	33.7	027L4182
ICF 25	4	14MB	1½	40	Butt-weld DIN-EN 10220	ICFS 25	ICFF 25	ICM 25-B	ICFS 25			15.3	33.7	027L4117
ICF 15	4	14MA	½	15	Socket weld, ANSI (B 16.11)	ICFS 15*	ICFF 15*	ICM 20-A	ICFS 20			6.8	15.0	027L4531
ICF 15	4	14MB	½	15	Socket weld, ANSI (B 16.11)	ICFS 15*	ICFF 15*	ICM 20-B	ICFS 20			6.8	15.0	027L4583
ICF 15	4	14MB	¾	20	Socket weld, ANSI (B 16.11)	ICFS 15*	ICFF 15*	ICM 20-B	ICFS 20			6.8	15.0	027L4623
ICF 15	4	14MA	¾	20	Socket weld, ANSI (B 16.11)	ICFS 15*	ICFF 15*	ICM 20-A	ICFS 20			6.8	15.0	027L4616
ICF 20	4	14MA	¾	20	Socket weld, ANSI (B 16.11)	ICFS 20	ICFF 20E	ICM 20-A	ICFS 20			7.5	16.5	027L3099
ICF 20	4	14MA	1	25	Socket weld, ANSI (B 16.11)	ICFS 20	ICFF 20E	ICM 20-A	ICFS 20			6.7	14.7	027L3101
ICF 20	4	14MB	1	25	Socket weld, ANSI (B 16.11)	ICFS 20	ICFF 20E	ICM 20-B	ICFS 20			6.7	14.7	027L3106
ICF 25	4	14MB	1	25	Socket weld, ANSI (B 16.11)	ICFS 25	ICFF 25	ICM 25-B	ICFS 25			14.4	31.7	027L4188
ICF 25	4	14MB	1¼	32	Socket weld, ANSI (B 16.11)	ICFS 25	ICFF 25E	ICM 25-B	ICFS 25			17.3	38.1	027L4114
ICF 25	4	14MB	1½	40	Socket weld, ANSI (B 16.11)	ICFS 25	ICFF 25E	ICM 25-B	ICFS 25			16.6	36.6	027L4118
ICF 20	4	14MC	1	25	Socket weld, ANSI (B 16.11)	ICFS 20	ICFF 20E	ICM 20-C	ICFS 20			6.7	14.7	027L3112
ICF 25	4	14MA	1	25	Socket weld, ANSI (B 16.11)	ICFS 25	ICFF 25E	ICM 25-A	ICFS 25			15.8	34.8	027L4104
ICF 20	4	14MC	1¼	32	Socket weld, ANSI (B 16.11)	ICFS 20	ICFF 20E	ICM 20-C	ICFS 20			7.4	16.3	027L3113
ICF 25	4	14MA	1¼	32	Socket weld, ANSI (B 16.11)	ICFS 25	ICFF 25E	ICM 25-A	ICFS 25			15.6	34.3	027L4109
ICF 25	4	14MA	1½	40	Socket weld, ANSI (B 16.11)	ICFS 25	ICFF 25E	ICM 25-A	ICFS 25			15.8	34.8	027L4140

** Fixed module*
ICAD and coils are not included and must be ordered separately.
***Please Note**: When used in systems with CO_2, the o-rings on the ICM module can swell (grow). At service, it is therefore recommended to install new o-rings, before the ICM function module is re-installed in the ICF valve body.*

© Danfoss | DCS (MS) | 2019.09

Hot gas defrost

Application 9: Hot gas defrost

Type	# of Modules	Appl. #	Connection size		Connection type	Module location					Weight		Code number
			[in.]	[mm]		M1	M2	M3	M4		kg	lbs	
ICF 20	4	9	¾	20	Butt-weld ANSI (B 36.10)	ICFS 20	ICFF 20	ICFE 20	ICFS 20		7.2	15.8	027L3069
ICF 15	4	9H	¾	20	Butt-weld ANSI (B 36.10)	ICFS 15*	ICFF 15*	ICFE 20H	ICFS 20		7.2	15.4	027L4554
ICF 15	4	9	½	15	Butt-weld DIN-EN 10220	ICFS 15*	ICFF 15*	ICFE 20	ICFS 20		6.3	13.9	027L4543
ICF 15	4	9H	½	15	Butt-weld DIN-EN 10220	ICFS 15*	ICFF 15*	ICFE 20H	ICFS 20		7.2	15.4	027L4541
ICF 15	4	9	¾	20	Butt-weld DIN-EN 10220	ICFS 15*	ICFF 15*	ICFE 20	ICFS 20		6.3	13.9	027L4571
ICF 20	4	9	¾	20	Butt-weld DIN-EN 10220	ICFS 20	ICFF 20	ICFE 20	ICFS 20		6.7	14.7	027L3120
ICF 15	4	9H	¾	20	Butt-weld DIN-EN 10220	ICFS 15*	ICFF 15*	ICFE 20H	ICFS 20		7.2	15.4	027L4521
ICF 20	4	9	1	25	Butt-weld DIN-EN 10220	ICFS 20	ICFF 20	ICFE 20	ICFS 20		7.2	15.8	027L3067
ICF 20	4	9H	1	25	Butt-weld DIN-EN 10220	ICFS 20	ICFF 20	ICFE 20H	ICFS 20		8.2	18.0	027L3333
ICF 25	4	9	1	25	Butt-weld DIN-EN 10220	ICFS 25	ICFF 25	ICFE 25	ICFS 25		15.8	34.8	027L4063
ICF 20	4	9	1¼	32	Butt-weld DIN-EN 10220	ICFS 20	ICFF 20	ICFE 20	ICFS 20		6.8	15.0	027L3068
ICF 20	4	9H	1¼	32	Butt-weld DIN-EN 10220	ICFS 20	ICFF 20	ICFE 20H	ICFS 20		7.6	16.7	027L3334
ICF 25	4	9	1¼	32	Butt-weld DIN-EN 10220	ICFS 25	ICFF 25	ICFE 25	ICFS 25		15.7	34.5	027L4067
ICF 25	4	9	1½	40	Butt-weld DIN-EN 10220	ICFS 25	ICFF 25	ICFE 25	ICFS 25		15.7	34.5	027L4072
ICF 15	4	9	½	15	Socket weld, ANSI (B 16.11)	ICFS 15*	ICFF 15*	ICFE 20	ICFS 20		6.3	13.9	027L4538
ICF 15	4	9H	½	15	Socket weld, ANSI (B 16.11)	ICFS 15*	ICFF 15*	ICFE 20H	ICFS 20		7.2	15.4	027L4527
ICF 15	4	9	¾	20	Socket weld, ANSI (B 16.11)	ICFS 15*	ICFF 15*	ICFE 20	ICFS 20		6.3	13.9	027L4618
ICF 15	4	9H	¾	20	Socket weld, ANSI (B 16.11)	ICFS 15*	ICFF 15*	ICFE 20H	ICFS 20		7.2	15.4	027L4612
ICF 20	4	9H	¾	20	Socket weld, ANSI (B 16.11)	ICFS 20	ICFF 20E	ICFE 20H	ICFS 20		8.0	17.6	027L3351
ICF 20	4	9	1	25	Socket weld, ANSI (B 16.11)	ICFS 20	ICFF 20E	ICFE 20	ICFS 20		7.0	15.4	027L3071
ICF 20	4	9H	1	25	Socket weld, ANSI (B 16.11)	ICFS 20	ICFF 20E	ICFE 20H	ICFS 20		8.1	17.8	027L3336
ICF 25	4	9	1	25	Socket weld, ANSI (B 16.11)	ICFS 25	ICFF 25E	ICFE 25	ICFS 25		16.0	35.2	027L4064
ICF 20	4	9	1¼	32	Socket weld, ANSI (B 16.11)	ICFS 20	ICFF 20E	ICFE 20	ICFS 20		7.4	16.3	027L3072
ICF 20	4	9H	1¼	32	Socket weld, ANSI (B 16.11)	ICFS 20	ICFF 20E	ICFE 20H	ICFS 20		7.9	17.4	027L3337
ICF 25	4	9	1¼	32	Socket weld, ANSI (B 16.11)	ICFS 25	ICFF 25E	ICFE 25	ICFS 25		16.0	35.2	027L4069
ICF 25	4	9	1½	40	Socket weld, ANSI (B 16.11)	ICFS 25	ICFF 25E	ICFE 25	ICFS 25		16.1	35.4	027L4073

Hot gas defrost (ICF 50 only)

Application 47: Hot gas defrost - On/Off 2-step solenoid (ICF 50 only)

Type	# of Modules	Appl. #	Connection size		Connection type		Module location					Weight		Code number
			[in.]	[mm]			M1	M2	M3	M4		kg	lbs	
ICF 50	4	47	1½	40	Socket weld, ANSI (B 16.11)	S	SVA-S 50*	FIA 50	ICSH 50-32	SVA-S 50		25.8	56.8	027L5070
ICF 50	4	47	1½	40	Socket weld, ANSI (B 16.11)	S	SVA-S 50*	FIA 50	ICSH 50-40	SVA-S 50		25.8	56.8	027L5071
ICF 50	4	47	2	50	Socket weld, ANSI (B 16.11)	S	SVA-S 50*	FIA 50	ICSH 50-40	SVA-S 50		25.8	56.8	027L5072
ICF 50	4	47	2	50	Socket weld, ANSI (B 16.11)	S	SVA-S 50*	FIA 50	ICSH 50	SVA-S 50		25.8	56.8	027L5073

Application 48: Hot gas defrost - On/Off 2-step solenoid + manual Regulating (ICF 50 only)

Type	# of Modules	Appl. #	Connection size		Connection type		Module location					Weight		Code number
			[in.]	[mm]			M1	M2	M3	M4		kg	lbs	
ICF 50	4	48	1½	40	Socket weld, ANSI (B 16.11)	S	SVA-S 50*	FIA 50	ICSH 50-32	REG-SB 50		25.8	56.8	027L5074

** Fixed module*
ICAD and coils are not included and must be ordered separately.
***Please Note**: When used in systems with CO_2, the o-rings on the ICM module can swell (grow). At service, it is therefore recommended to install new o-rings, before the ICM function module is re-installed in the ICF valve body.*

Solenoid multiple evaporators

Application 11: Solenoid - Multiple evaporators

Type	# of Modules	Appl. #	Connection size		Connection type	Module location					Weight		Code number
			[in.]	[mm]		M1	M2	M3	M4		kg	lbs	
ICF 20	4	11	¾	20	Butt-weld ANSI (B 36.10)	ICFS 20	ICFF 20	ICFE 20	ICFC 20		6.5	14.3	027L3085
ICF 15	4	11	½	15	Butt-weld DIN-EN 10220	ICFS 15*	ICFF 15*	ICFE 20	ICFC 20		6.5	14.3	027L4539
ICF 15	4	11	¾	20	Butt-weld DIN-EN 10220	ICFS 15*	ICFF 15*	ICFE 20	ICFC 20		6.5	14.3	027L4547
ICF 15	4	11H	¾	20	Butt-weld DIN-EN 10220	ICFS 15*	ICFF 15*	ICFE 20-H	ICFC 20		7.2	15.8	027L4546
ICF 20	4	11	¾	20	Butt-weld DIN-EN 10220	ICFS 20	ICFF 20	ICFE 20	ICFC 20		6.4	14.1	027L4580
ICF 20	4	11	1	25	Butt-weld DIN-EN 10220	ICFS 20	ICFF 20	ICFE 20	ICFC 20		6.4	14.1	027L3083
ICF 20	4	11H	1	25	Butt-weld DIN-EN 10220	ICFS 20	ICFF 20	ICFE 20H	ICFC 20		8.0	17.6	027L3345
ICF 20	4	11	1¼	32	Butt-weld DIN-EN 10220	ICFS 20	ICFF 20	ICFE 20	ICFC 20		6.5	14.3	027L3084
ICF 20	4	11H	1¼	32	Butt-weld DIN-EN 10220	ICFS 20	ICFF 20	ICFE 20H	ICFC 20		7.4	16.3	027L3346
ICF 25	4	11	1¼	32	Butt-weld DIN-EN 10220	ICFS 25	ICFF 25	ICFE 25	ICFC 25		14.9	32.8	027L4094
ICF 25	4	11	1½	40	Butt-weld DIN-EN 10220	ICFS 25	ICFF 25	ICFE 25	ICFC 25		13.7	30.1	027L4099
ICF 20	4	11	1	25	Socket weld, ANSI (B 16.11)	ICFS 20	ICFF 20E	ICFE 20	ICFC 20		6.9	15.2	027L3087
ICF 20	4	11H	1	25	Socket weld, ANSI (B 16.11)	ICFS 20	ICFF 20E	ICFE 20H	ICFC 20		8.0	17.6	027L3348
ICF 20	4	11	1¼	32	Socket weld, ANSI (B 16.11)	ICFS 20	ICFF 20E	ICFE 20	ICFC 20		6.7	14.7	027L3088
ICF 20	4	11H	1¼	32	Socket weld, ANSI (B 16.11)	ICFS 20	ICFF 20E	ICFE 20H	ICFC 20		7.4	16.3	027L3349
ICF 25	4	11	1¼	32	Socket weld, ANSI (B 16.11)	ICFS 25	ICFF 25E	ICFE 25	ICFC 25		13.0	28.6	027L4096
ICF 25	4	11	1½	40	Socket weld, ANSI (B 16.11)	ICFS 25	ICFF 25E	ICFE 25	ICFC 25		14.3	31.5	027L4100

Application 18: Solenoid - Multiple evaporators

Type	# of Modules	Appl. #	Connection size		Connection type	Module location					Weight		Code number
			[in.]	[mm]		M1	M2	M3	M4		kg	lbs	
ICF 15	4	18H	¾	20	Butt-weld ANSI (B 36.10)	ICFS 15*	ICFF 15*	ICFE 20-H	ICFN 20		7.2	15.8	027L4572
ICF 15	4	18H	½	15	Butt-weld DIN-EN 10220	ICFS 15*	ICFF 15*	ICFE 20-H	ICFN 20		7.2	15.8	027L4542
ICF 15	4	18H	¾	20	Butt-weld DIN-EN 10220	ICFS 15*	ICFF 15*	ICFE 20-H	ICFN 20		7.2	15.8	027L4550
ICF 20	4	18	1	25	Butt-weld DIN-EN 10220	ICFS 20	ICFF 20E	ICFE 20	ICFN 20		7.3	16.0	027L3438
ICF 25	4	18	1	25	Butt-weld DIN-EN 10220	ICFS 25	ICFF 25	ICFE 25	ICFN 25		15.8	34.8	027L4175
ICF 25	4	18	1¼	32	Butt-weld DIN-EN 10220	ICFS 25	ICFF 25	ICFE 25	ICFN 25		16.6	36.5	027L4164
ICF 25	4	18	1¼	32	Butt-weld DIN-EN 10220	ICFS 25	ICFF 25E	ICFE 25	ICFN 25		16.6	36.5	027L4575
ICF 25	4	18	1½	40	Butt-weld DIN-EN 10220	ICFS 25	ICFF 25	ICFE 25	ICFN 25		16.6	36.5	027L4165
ICF 25	4	18	1½	40	Butt-weld DIN-EN 10220	ICFS 25	ICFF 25E	ICFE 25	ICFN 25		16.6	36.6	027L4177
ICF 15	4	18	½	15	Socket weld, ANSI (B 16.11)	ICFS 15*	ICFF 15*	ICFE 20	ICFN 20		6.5	14.3	027L4558
ICF 15	4	18H	½	15	Socket weld, ANSI (B 16.11)	ICFS 15*	ICFF 15*	ICFE 20-H	ICFN 20		7.2	15.8	027L4557
ICF 15	4	18	¾	20	Socket weld, ANSI (B 16.11)	ICFS 15*	ICFF 15*	ICFE 20	ICFN 20		6.5	14.3	027L4621
ICF 15	4	18H	¾	20	Socket weld, ANSI (B 16.11)	ICFS 15*	ICFF 15*	ICFE 20-H	ICFN 20		7.2	15.8	027L4620
ICF 15	4	18	¾	20	Socket weld, ANSI (B 16.11)	ICFS 20	ICFF 20E	ICFE 20H	ICFN 20		8.0	17.6	027L3353
ICF 25	4	18	1	25	Socket weld, ANSI (B 16.11)	ICFS 25	ICFF 25E	ICFE 25	ICFN 25		16.9	37.2	027L4136
ICF 20	4	18H	1	25	Socket weld, ANSI (B 16.11)	ICFS 20	ICFF 20E	ICFE 20H	ICFN 20		8.0	17.6	027L3354
ICF 20	4	18H	1¼	32	Socket weld, ANSI (B 16.11)	ICFS 20	ICFF 20E	ICFE 20H	ICFN 20		8.0	17.6	027L3355
ICF 25	4	18	1¼	32	Socket weld, ANSI (B 16.11)	ICFS 25	ICFF 25E	ICFE 25	ICFN 25		16.0	35.2	027L4137
ICF 25	4	18	1½	40	Socket weld, ANSI (B 16.11)	ICFS 25	ICFF 25E	ICFE 25	ICFN 25		16.2	35.6	027L4138

Liquid PWM

Application 13: Liquid injection & liquid feed PWM

Type	# of Modules	Appl. #	Connection size		Connection type	Module location					Weight		Code number
			[in.]	[mm]		M1	M2	M3	M4		kg	lbs	
ICF 15	4	13	¾	20	Butt-weld ANSI (B 36.10)	ICFS 15*	ICFF 15*	ICFA 20	ICFN 20		6.2	13.7	027L4555
ICF 15	4	13	¾	20	Butt-weld DIN-EN 10220	ICFS 15*	ICFF 15*	ICFA 20	ICFN 20		6.2	13.7	027L4523
ICF 20	4	13	¾	20	Butt-weld DIN-EN 10220	ICFS 20	ICFF 20	ICFA 20	ICFN 20		6.8	15.0	027L3092
ICF 15	4	13	½	15	Socket weld, ANSI (B 16.11)	ICFS 15*	ICFF 15*	ICFA 20	ICFN 20		6.2	13.7	027L4529
ICF 15	4	13	¾	20	Socket weld, ANSI (B 16.11)	ICFS 15*	ICFF 15*	ICFA 20	ICFN 20		6.2	13.7	027L4614
ICF 20	4	13	¾	20	Socket weld, ANSI (B 16.11)	ICFS 20	ICFF 20E	ICFA 20	ICFN 20		6.8	15.0	027L3094
ICF 15	4	13	⅞	22	Solder DIN-EN1254-1	ICFS 15*	ICFF 15*	ICFA20	ICFN20		6.2	13.7	027L4582

** Fixed module*
ICAD and coils are not included and must be ordered separately.
***Please Note**: When used in systems with CO_2, the o-rings on the ICM module can swell (grow). At service, it is therefore recommended to install new o-rings, before the ICM function module is re-installed in the ICF valve body.*

© Danfoss | DCS (MS) | 2019.09

Return lines

Application 41: Return lines - ON/OFF

Type	# of Modules	Appl. #	Connection size		Connection type	Module location					Weight		Code number
			[in.]	[mm]		M1	M2	M3	M4		kg	lbs	
ICF 50	4	41	1½	40	Butt-weld DIN-EN 10220	SVA-S 50*	ICFB 50	ICLX 50	SVA-S 50		25.5	56.1	027L5021
ICF 50	4	41	2	50	Butt-weld DIN-EN 10220	SVA-S 50*	ICFB 50	ICLX 50	SVA-S 50		25.5	56.1	027L5023
ICF 50	4	41	1½	40	Socket weld, ANSI (B 16.11)	SVA-S 50*	ICFB 50	ICLX 50	SVA-S 50		25.5	56.1	027L5022
ICF 50	4	41	2	50	Socket weld, ANSI (B 16.11)	SVA-S 50*	ICFB 50	ICLX 50	SVA-S 50		25.5	56.1	027L5024
ICF 65	3	41	2½	65	Butt-weld ANSI (B 36.19)	SVA-S 65*		ICLX 65	SVA-S 65		32.7	71.9	027L6522
ICF 65	3	41	3	80	Butt-weld ANSI (B 36.19)	SVA-S 65*		ICLX 65	SVA-S 65		32.7	71.9	027L6524
ICF 65	3	41	2½	65	Butt-weld DIN-EN 10220	SVA-S 65*		ICLX 65	SVA-S 65		32.7	71.9	027L6521
ICF 65	3	41	3	80	Butt-weld DIN-EN 10220	SVA-S 65*		ICLX 65	SVA-S 65		32.7	71.9	027L6523

Application 42: Return lines - Pressure (temperature) - Mechanical control

Type	# of Modules	Appl. #	Connection size		Connection type	Module location					Weight		Code number
			[in.]	[mm]		M1	M2	M3	M4		kg	lbs	
ICF 50	4	42S50	1½	40	Butt-weld DIN-EN 10220	SVA-S 50*	ICFB 50	ICS 50	SVA-S 50		25.8	56.8	027L5001
ICF 50	4	42S32	1½	40	Butt-weld DIN-EN 10220	SVA-S 50*	ICFB 50	ICS 50-32	SVA-S 50		25.8	56.8	027L5005
ICF 50	4	42S40	1½	40	Butt-weld DIN-EN 10220	SVA-S 50*	ICFB 50	ICS 50-40	SVA-S 50		25.8	56.8	027L5009
ICF 50	4	42S50	2	50	Butt-weld DIN-EN 10220	SVA-S 50*	ICFB 50	ICS 50	SVA-S 50		25.8	56.8	027L5003
ICF 50	4	42S32	2	50	Butt-weld DIN-EN 10220	SVA-S 50*	ICFB 50	ICS 50-32	SVA-S 50		25.8	56.8	027L5007
ICF 50	4	42S40	2	50	Butt-weld DIN-EN 10220	SVA-S 50*	ICFB 50	ICS 50-40	SVA-S 50		25.8	56.8	027L5011
ICF 50	4	42S50	1½	40	Socket weld. ANSI (B 16.11)	SVA-S 50*	ICFB 50	ICS 50	SVA-S 50		25.8	56.8	027L5002
ICF 50	4	42S32	1½	40	Socket weld. ANSI (B 16.11)	SVA-S 50*	ICFB 50	ICS 50-32	SVA-S 50		25.8	56.8	027L5006
ICF 50	4	42S50	2	50	Socket weld. ANSI (B 16.11)	SVA-S 50*	ICFB 50	ICS 50	SVA-S 50		25.8	56.8	027L5004
ICF 50	4	42S32	2	50	Socket weld. ANSI (B 16.11)	SVA-S 50*	ICFB 50	ICS 50-32	SVA-S 50		25.8	56.8	027L5008
ICF 50	4	42S40	2	50	Socket weld. ANSI (B 16.11)	SVA-S 50*	ICFB 50	ICS 50-40	SVA-S 50		25.8	56.8	027L5012
ICF 65	3	42S65	2½	65	Butt-weld ANSI (B 36.19)	SVA-S 65*		ICS 65	SVA-S 65		33.3	73.3	027L6502
ICF 65	3	42S40	2½	65	Butt-weld ANSI (B 36.19)	SVA-S 65*		ICS 65-40	SVA-S 65		33.3	73.3	027L6506
ICF 65	3	42S80	2½	65	Butt-weld ANSI (B 36.19)	SVA-S 65*		ICS 80	SVA-S 65		33.3	73.3	027L6510
ICF 65	3	42S65	3	80	Butt-weld ANSI (B 36.19)	SVA-S 65*		ICS 65	SVA-S 65		33.3	73.3	027L6504
ICF 65	3	42S40	3	80	Butt-weld ANSI (B 36.19)	SVA-S 65*		ICS 65-40	SVA-S 65		33.3	73.3	027L6508
ICF 65	3	42S80	3	80	Butt-weld ANSI (B 36.19)	SVA-S 65*		ICS 80	SVA-S 65		33.3	73.3	027L6512
ICF 65	3	42S65	2½	65	Butt-weld DIN-EN 10220	SVA-S 65*		ICS 65	SVA-S 65		33.3	73.3	027L6501
ICF 65	3	42S40	2½	65	Butt-weld DIN-EN 10220	SVA-S 65*		ICS 65-40	SVA-S 65		33.3	73.3	027L6505
ICF 65	3	42S80	2½	65	Butt-weld DIN-EN 10220	SVA-S 65*		ICS 80	SVA-S 65		33.3	73.3	027L6509
ICF 65	3	42S65	3	80	Butt-weld DIN-EN 10220	SVA-S 65*		ICS 65	SVA-S 65		33.3	73.3	027L6503
ICF 65	3	42S40	3	80	Butt-weld DIN-EN 10220	SVA-S 65*		ICS 65-40	SVA-S 65		33.3	73.3	027L6507
ICF 65	3	42S80	3	80	Butt-weld DIN-EN 10220	SVA-S 65*		ICS 80	SVA-S 65		33.3	73.3	027L6511

All ICS modules are 3-pilot versions. They are supplied with two blanking plugs (A) and one sealing plug (B) (see page 9).

** Fixed module*
ICAD and coils are not included and must be ordered separately.
***Please Note**: When used in systems with CO_2, the o-rings on the ICM module can swell (grow). At service, it is therefore recommended to install new o-rings, before the ICM function module is re-installed in the ICF valve body.*

Return lines

Application 43: Return lines - Pressure (temperature) - Electronic control

Type	# of Modules	Appl. #	Connection size		Connection type	Module location					Weight		Code number
			[in.]	[mm]		M1	M2	M3	M4		kg	lbs	
ICF 50	4	43MA	1½	40	Butt-weld DIN-EN 10220	SVA-S 50*	ICFB 50	ICM 50 - A	SVA-S 50		24.8	54.6	027L5013
ICF 50	4	43MB	1½	40	Butt-weld DIN-EN 10220	SVA-S 50*	ICFB 50	ICM 50 - B	SVA-S 50		24.8	54.6	027L5017
ICF 50	4	43MA	2	50	Butt-weld DIN-EN 10220	SVA-S 50*	ICFB 50	ICM 50 - A	SVA-S 50		24.8	54.6	027L5015
ICF 50	4	43MB	2	50	Butt-weld DIN-EN 10220	SVA-S 50*	ICFB 50	ICM 50 - B	SVA-S 50		24.8	54.6	027L5019
ICF 50	4	43MA	1½	40	Socket weld, ANSI (B 16.11)	SVA-S 50*	ICFB 50	ICM 50 - A	SVA-S 50		24.8	54.6	027L5014
ICF 50	4	43MB	1½	40	Socket weld, ANSI (B 16.11)	SVA-S 50*	ICFB 50	ICM 50 - B	SVA-S 50		24.8	54.6	027L5018
ICF 50	4	43MA	2	50	Socket weld, ANSI (B 16.11)	SVA-S 50*	ICFB 50	ICM 50 - A	SVA-S 50		24.8	54.6	027L5016
ICF 50	4	43MB	2	50	Socket weld, ANSI (B 16.11)	SVA-S 50*	ICFB 50	ICM 50 - B	SVA-S 50		24.8	54.6	027L5020
ICF 65	3	43MA	2½	65	Butt-weld ANSI (B 36.19)	SVA-S 65*		ICM 65 - A	SVA-S 65		32.9	72.4	027L6514
ICF 65	3	43MB	2½	65	Butt-weld ANSI (B 36.19)	SVA-S 65*		ICM 65 - B	SVA-S 65		32.9	72.4	027L6518
ICF 65	3	43MA	3	80	Butt-weld ANSI (B 36.19)	SVA-S 65*		ICM 65 - A	SVA-S 65		32.9	72.4	027L6516
ICF 65	3	43MB	3	80	Butt-weld ANSI (B 36.19)	SVA-S 65*		ICM 65 - B	SVA-S 65		32.9	72.4	027L6520
ICF 65	3	43MA	2½	65	Butt-weld DIN-EN 10220	SVA-S 65*		ICM 65 - A	SVA-S 65		32.9	72.4	027L6513
ICF 65	3	43MB	2½	65	Butt-weld DIN-EN 10220	SVA-S 65*		ICM 65 - B	SVA-S 65		32.9	72.4	027L6517
ICF 65	3	43MA	3	80	Butt-weld DIN-EN 10220	SVA-S 65*		ICM 65 - A	SVA-S 65		32.9	72.4	027L6515
ICF 65	3	43MB	3	80	Butt-weld DIN-EN 10220	SVA-S 65*		ICM 65 - B	SVA-S 65		32.9	72.4	027L6519

Application 44: ON/OFF 2-step solenoid + Manuel Regulating

Type	# of Modules	Appl. #	Connection size		Connection type	Module location					Weight		Code number
			[in.]	[mm]		M1	M2	M3	M4		kg	lbs	
ICF 50	4	44	1½	40	Butt-weld DIN-EN 10220	SVA-S 50*	ICFB 50	ICLX 50	REG 50-B		25.5	56.1	027L5045
ICF 50	4	44	2	50	Butt-weld DIN-EN 10220	SVA-S 50*	ICFB 50	ICLX 50	REG 50-B		25.5	56.1	027L5046
ICF 50	4	44	1½	40	Socket weld, ANSI (B 16.11)	SVA-S 50*	ICFB 50	ICLX 50	REG 50-B		25.5	56.1	027L5047
ICF 50	4	44	2	50	Socket weld, ANSI (B 16.11)	SVA-S 50*	ICFB 50	ICLX 50	REG 50-B		25.5	56.1	027L5048

Application 45: Pressure (temperature) Mechanical control + Manuel Regulating

Type	# of Modules	Appl. #	Connection size		Connection type	Module location					Weight		Code number
			[in.]	[mm]		M1	M2	M3	M4		kg	lbs	
ICF 50	4	45S50	1½	40	Butt-weld DIN-EN 10220	SVA-S 50*	ICFB 50	ICS 50	REG 50-B		25.8	56.8	027L5025
ICF 50	4	45S32	1½	40	Butt-weld DIN-EN 10220	SVA-S 50*	ICFB 50	ICS 50-32	REG 50-B		25.8	56.8	027L5029
ICF 50	4	45S40	1½	40	Butt-weld DIN-EN 10220	SVA-S 50*	ICFB 50	ICS 50-40	REG 50-B		25.8	56.8	027L5033
ICF 50	4	45S50	2	50	Butt-weld DIN-EN 10220	SVA-S 50*	ICFB 50	ICS 50	REG 50-B		25.8	56.8	027L5027
ICF 50	4	45S32	2	50	Butt-weld DIN-EN 10220	SVA-S 50*	ICFB 50	ICS 50-32	REG 50-B		25.8	56.8	027L5031
ICF 50	4	45S40	2	50	Butt-weld DIN-EN 10220	SVA-S 50*	ICFB 50	ICS 50-40	REG 50-B		25.8	56.8	027L5035
ICF 50	4	45S50	1½	40	Socket weld, ANSI (B 16.11)	SVA-S 50*	ICFB 50	ICS 50	REG 50-B		25.8	56.8	027L5026
ICF 50	4	45S32	1½	40	Socket weld, ANSI (B 16.11)	SVA-S 50*	ICFB 50	ICS 50-32	REG 50-B		25.8	56.8	027L5030
ICF 50	4	45S40	1½	40	Socket weld, ANSI (B 16.11)	SVA-S 50*	ICFB 50	ICS 50-40	REG 50-B		25.8	56.8	027L5034
ICF 50	4	45S50	2	50	Socket weld, ANSI (B 16.11)	SVA-S 50*	ICFB 50	ICS 50	REG 50-B		25.8	56.8	027L5028
ICF 50	4	45S32	2	50	Socket weld, ANSI (B 16.11)	SVA-S 50*	ICFB 50	ICS 50-32	REG 50-B		25.8	56.8	027L5032
ICF 50	4	45S40	2	50	Socket weld, ANSI (B 16.11)	SVA-S 50*	ICFB 50	ICS 50-40	REG 50-B		25.8	56.8	027L5036
ICF 65	3	45S65	3	65	Butt-weld DIN-EN 10220	SVA-S 65*		ICS 65	REG 65-B		33.3	73.3	027L6525
ICF 65	3	45S65	3	65	Butt-weld DIN-EN 10220	SVA-S 65*		ICS 80	REG 65-B		33.3	73.3	027L6526

Application 46: Pressure (temperature) Electronic control + Manual Regulating

Type	# of Modules	Appl. #	Connection size		Connection type	Module location					Weight		Code number
			[in.]	[mm]		M1	M2	M3	M4		kg	lbs	
ICF 50	4	46MA	1½	40	Butt-weld DIN-EN 10220	SVA-S 50*	ICFB 50	ICM 50-A	REG 50-B		24.8	54.6	027L5037
ICF 50	4	46MB	1½	40	Butt-weld DIN-EN 10220	SVA-S 50*	ICFB 50	ICM 50-B	REG 50-B		24.8	54.6	027L5041
ICF 50	4	46MA	2	50	Butt-weld DIN-EN 10220	SVA-S 50*	ICFB 50	ICM 50-A	REG 50-B		24.8	54.6	027L5039
ICF 50	4	46MB	2	50	Butt-weld DIN-EN 10220	SVA-S 50*	ICFB 50	ICM 50-B	REG 50-B		24.8	54.6	027L5043
ICF 50	4	46MA	1½	40	Socket weld, ANSI (B 16.11)	SVA-S 50*	ICFB 50	ICM 50-A	REG 50-B		24.8	54.6	027L5038
ICF 50	4	46MB	1½	40	Socket weld, ANSI (B 16.11)	SVA-S 50*	ICFB 50	ICM 50-B	REG 50-B		24.8	54.6	027L5042
ICF 50	4	46MA	2	50	Socket weld, ANSI (B 16.11)	SVA-S 50*	ICFB 50	ICM 50-A	REG 50-B		24.8	54.6	027L5040
ICF 50	4	46MB	2	50	Socket weld, ANSI (B 16.11)	SVA-S 50*	ICFB 50	ICM 50-B	REG 50-B		24.8	54.6	027L5044

All ICS modules are 3-pilot versions. They are supplied with two blanking plugs (A) and one sealing plug (B) (see page 9).

** Fixed module*
ICAD and coils are not included and must be ordered separately.
***Please Note**: When used in systems with CO_2, the o-rings on the ICM module can swell (grow). At service, it is therefore recommended to install new o-rings, before the ICM function module is re-installed in the ICF valve body.*

© Danfoss | DCS (MS) | 2019.09

Miscellaneous

Application 90: Miscellaneous

Type	# of modules	Appl. #	Connection size		Connection type	Module location						Weight		Code number
			[in.]	[mm]		M1	M2	M3	M4	M5	M6	kg	lbs	
ICF 20	4	90	¾	20	Butt-weld ANSI (B 36.10)	ICFS 20	ICFF 20E	ICFE 20	ICFN 20			7.2	15.8	027L3371
ICF 20	6	90	1	25	Butt-weld ANSI (B 36.10)	ICFS 20	ICFF 20	ICFE 20	ICFC 20	ICFB 20	ICFB 20	10.2	22.5	027L3420
ICF 20	6	90	1	25	Butt-weld ANSI (B 36.10)	ICFS 20	ICFF 20	ICFE 20	ICFS 20	ICFB 20	ICFB 20	9.7	21.4	027L3421
ICF 20	4	90	¾	20	Butt-weld DIN-EN 10220	ICFR 20A	ICFF 20	ICFA 20	ICFN 20			6.4	14.1	027L3156
ICF 20	4	90	¾	20	Butt-weld DIN-EN 10220	ICFR 20A	ICFF 20	ICFE 20	ICFN 20			6.4	14.1	027L3155
ICF 20	4	90	¾	20	Butt-weld DIN-EN 10220	ICFS 20	ICFF 20	ICFE 20	ICFN 20			7.2	15.8	027L3379
ICF 20	4	90	¾	20	Butt-weld DIN-EN 10220	ICFS 20	ICFW 20-D	ICFE 20	ICFS 20			5.9	13.0	027L3385
ICF 20	4	90	¾	20	Butt-weld DIN-EN 10220	ICFS 20	ICFF 20	ICFB 20	ICFC 20			5.9	13.0	027L3141
ICF 20	4	99	¾	20	Butt-weld DIN-EN 10220	ICFS 20	ICFF 20	ICFE 20	ICFB 20			6.2	13.7	027L3122
ICF 20	4	99	¾	20	Butt-weld DIN-EN 10220	ICFS 20	ICFF 20	ICFE 20	ICFO 20			6.1	13.4	027L3359
ICF 20	4	99	¾	20	Butt-weld DIN-EN 10220	ICFS 20	ICFF 20	ICFE 20	ICFR 20A			6.7	14.8	027L3700
ICF 20	4	90	¾	20	Butt-weld DIN-EN 10220	ICFS 20	ICFF 20	ICFB 20	ICFN 20			6.7	14.8	027L3405
ICF 15	4	90	½	15	Butt-weld DIN-EN 10220	ICFS 15*	ICFF 15*	ICFB 20	ICFN 20			6.7	14.8	027L4581
ICF 15	4	90	¾	20	Butt-weld DIN-EN 10220	ICFS 15*	ICFF 15*	ICFR 20A	ICFN 20			7.2	15.8	027L4576
ICF 20	6	90	¾	20	Butt-weld DIN-EN 10220	ICFS 20	ICFF 20	ICFE 20	ICFO 20	ICFA 20	ICFS 20	9.4	20.7	027L3053
ICF 20	6	90	¾	20	Butt-weld DIN-EN 10220	ICFS 20	ICFF 20	ICFA 20	ICFC 20	ICFB 20	ICFS 20	9.9	21.8	027L3056
ICF 20	6	90	¾	20	Butt-weld DIN-EN 10220	ICFS 20	ICFF 20	ICFE 20	ICFO 20	ICM 20-A	ICFN 20	9.7	21.3	027L3372
ICF 20	6	90	¾	20	Butt-weld DIN-EN 10220	ICFS 20	ICFF 20	ICFE 20	ICFB 20	ICFR 20-A	ICFN 20	9.7	21.3	027L3133
ICF 20	6	90	¾	20	Butt-weld DIN-EN 10220	ICFS 20	ICFF 20	ICFE 20	ICFC 20	ICFB 20	ICFR 20A	9.4	20.7	027L3144
ICF 20	6	90	¾	20	Butt-weld DIN-EN 10220	ICFS 20	ICFF 20	ICFE 20	ICFC 20	ICM 20-C	ICFS 20	9.7	21.3	027L3152
ICF 20	6	90	¾	20	Butt-weld DIN-EN 10220	ICFS 20	ICFF 20	ICFE 20	ICFO 20	ICFS 20	ICFC 20	9.8	21.6	027L3360
ICF 20	6	90	¾	20	Butt-weld DIN-EN 10220	ICFB 20	ICFC 20	ICFE 20	ICFO 20	ICFS 20	ICFB 20	6.2	13.6	027L3121
ICF 20	6	90	¾	20	Butt-weld DIN-EN 10220	ICFS 20	ICFF 20	ICFE 20H	ICFC 20	ICFB 20	ICFS 20	9.6	21.1	027L3387
ICF 20	6	90	¾	20	Butt-weld DIN-EN 10220	ICFS 20	ICFF 20	ICFE 20	ICFC 20	ICFR 20A	ICFW 20D	9.1	20.1	027L3368
ICF 20	6	90	¾	20	Butt-weld DIN-EN 10220	ICFS 20	ICFF 20	ICFE 20H	ICFC 20	ICFR 20A	ICFS 20	10.2	22.5	027L3386
ICF 20	6	90	¾	20	Butt-weld DIN-EN 10220	ICFS 20	ICFF 20	ICFE 20	ICFC 20	ICM 20B	ICFS 20	9.7	21.4	027L3397
ICF 20	6	90	¾	20	Butt-weld DIN-EN 10220	ICFS 20	ICFF 20	ICFE 20	ICFC 20	ICFB 20	ICFS 20	9.4	20.7	027L3424
ICF 20	6	90	¾	20	Butt-weld DIN-EN 10220	ICFS 20	ICFF 20	ICFE 20	ICFO 20	ICM 20B	ICFN 20	9.6	21.1	027L3425
ICF 20	6	99	¾	20	Butt-weld DIN-EN 10220	ICFS 20	ICFF 20	ICFE 20	ICFC 20	ICFB 20	ICFR 20A	9.4	20.7	027L3701
ICF 20	6	90	¾	20	Butt-weld DIN-EN 10220	ICFS 20	ICFF 20E	ICFE 20	ICFN 20	ICFR 20B	ICFW 20D	9.1	20.1	027L3439
ICF 20	6	90	¾	20	Butt-weld DIN-EN 10220	ICFS 20	ICFF 20	ICFE 20	ICFC 20	ICFW 20D	ICFS 20	9.1	20.1	027L3441
ICF 20	6	90	¾	20	Butt-weld DIN-EN 10220	ICFS 20	ICFF 20	ICFE 20	ICFO 20	ICFB 20	ICFN 20	9.4	20.7	027L3446
ICF 20	6	90	¾	20	Butt-weld DIN-EN 10220	ICFS 20	ICFF 20	ICFE 20	ICFC 20	ICFR 20B	ICFW 20D	9.1	20.1	027L3447
ICF 20	4	90	1	25	Butt-weld DIN-EN 10220	ICFS 20	ICFF 20	ICFE 20	ICFN 20			6.7	14.7	027L3134
ICF 20	4	90	1	25	Butt-weld DIN-EN 10220	ICFS 20	ICFF 20	ICFE 20	ICFB 20			5.9	13.0	027L3364
ICF 20	4	90	1	25	Butt-weld DIN-EN 10220	ICFS 20	ICFF 20	ICFE 20H	ICFN 20			7.2	15.8	027L3380
ICF 20	6	90	1	25	Butt-weld DIN-EN 10220	ICFS 20	ICFF 20	ICFE 20	ICFO 20	ICFA 20	ICFS 20	9.8	21.6	027L3361
ICF 20	6	90	1	25	Butt-weld DIN-EN 10220	ICFS 20	ICFF 20	ICFE 20	ICFC 20	ICFR 20A	ICFB 20	9.1	20.0	027L3363
ICF 20	6	90	1	25	Butt-weld DIN-EN 10220	ICFS 20	ICFF 20	ICFE 20H	ICFC 20	ICFR 20B	ICFW 20D	12.0	26.4	027L3376
ICF 20	6	90	1	25	Butt-weld DIN-EN 10220	ICFS 20	ICFF 20E	ICFE 20H	ICFC 20	ICFR 20B	ICFW 20D	11.5	25.3	027L3375

** Fixed module*
ICAD and coils are not included and must be ordered separately.
***Please Note**: When used in systems with CO_2, the o-rings on the ICM module can swell (grow). At service, it is therefore recommended to install new o-rings, before the ICM function module is re-installed in the ICF valve body.*

Miscellaneous

Application 90: Miscellaneous

Type	# of modules	Appl. #	Connection size		Connection type	Module location						Weight		Code number
			[in.]	[mm]		M1	M2	M3	M4	M5	M6	kg	lbs	
ICF 20	4	90		20	Butt-weld DIN-EN 10220	ICFB 20	ICFD 20C	ICFE 20	ICFB 20					027L3599
ICF 20	4	90		25	Butt-weld DIN-EN 10220	ICFB 20	ICFD 20C	ICFE 20	ICFB 20					027L3600
ICF 20	6	90	1	25	Butt-weld DIN-EN 10220	ICFS 20	ICFF 20	ICFE 20	ICFC 20	ICFB 20	ICFS 20	9.4	20.7	027L3123
ICF 25	6	90	1	25	Butt-weld DIN-EN 10220	ICFS 25	ICFF 25	ICFE 25	ICFC 25	ICFR 25B	ICFW 25D	23.6	51.9	027L4168
ICF 25	6	90	1	25	Butt-weld DIN-EN 10220	ICFS 25	ICFF 25	ICFE 25	ICFC 25	ICFS 25	ICFB 25	22.0	48.4	027L4151
ICF 20	6	90	1	25	Butt-weld DIN-EN 10220	ICFS 20	ICFF 20	ICFE 20	ICFC 20	ICFR 20A	ICFW 20D	9.0	19.8	027L3369
ICF 20	6	90	1	25	Butt-weld DIN-EN 10220	ICFS 20	ICFF 20	ICFE 20	ICFO 20	ICFA 20	ICFC 20	9.6	21.1	027L3396
ICF 20	6	90	1	25	Butt-weld DIN-EN 10220	ICFS 20	ICFF 20E	ICFE 20H	ICFC 20	ICFR 20A	ICFB 20	9.7	21.4	027L3423
ICF 20	6	90	1	25	Butt-weld DIN-EN 10220	ICFS 20	ICFF 20	ICFE 20	ICFO 20	ICM 20B	ICFN 20	9.6	21.1	027L3426
ICF 25	6	90	1	25	Butt-weld DIN-EN 10220	ICFS 25	ICFF 25E	ICFE 25	ICFC 25	ICFR 25B	ICFB 25	23.6	52.0	027L4176
ICF 25	6	90	1	25	Butt-weld DIN-EN 10220	ICFS 25	ICFF 25E	ICFE 25	ICFC 25	ICFR 25B	ICFF 25	23.8	52.4	027L4577
ICF 25	6	90	1	25	Butt-weld DIN-EN 10220	ICFS 25	ICFF 25E	ICFE 25	ICFN 25	ICFR 25B	ICFW 25D	22.7	49.9	027L4186
ICF 25	6	90	1¼	32	Butt-weld DIN-EN 10220	ICFS 25	ICFF 25	ICFE 25	ICFC 25	ICFR 25B	ICFB 25	21.7	47.7	027L4143
ICF 25	6	90	1¼	32	Butt-weld DIN-EN 10220	ICFS 25	ICFF 25E	ICFE 25	ICFC 25	ICFR 25B	ICFW 25D	22.7	49.9	027L4160
ICF 25	6	90	1¼	32	Butt-weld DIN-EN 10220	ICFS 25	ICFF 25	ICFE 25	ICFC 25	ICFR 25B	ICFW 25D	21.9	48.2	027L4161
ICF 25	6	90	1¼	32	Butt-weld DIN-EN 10220	ICFS 25	ICFF 25E	ICFE 25	ICFC 25	ICFB 25	ICFS 25	21.9	48.2	027L4162
ICF 25	6	90	1¼	32	Butt-weld DIN-EN 10220	ICFS 25	ICFF 25-E	ICFE 25	ICFC 25	ICFR 25B	ICFB 25	22.7	49.9	027L4178
ICF 25	6	90	1½	40	Butt-weld DIN-EN 10220	ICFS 25	ICFF 25	ICFE 25	ICFC 25	ICFR 25A	ICFW 25D	23.6	51.9	027L4157
ICF 25	6	90	1½	40	Butt-weld DIN-EN 10220	ICFS 25	ICFF 25E	ICFE 25	ICFC 25	ICFR 25B	ICFW 25D	23.6	51.9	027L4166
ICF 25	6	90	1½	40	Butt-weld DIN-EN 10220	ICFS 25	ICFF 25	ICFE 25	ICFC 25	ICFR 25B	ICFW 25D	21.7	47.7	027L4167
ICF 25	4	90	1½	40	Butt-weld DIN-EN 10220	ICFS 25	ICFF 25	ICM 25A	ICFB 25			14.9	32.8	027L4185
ICF 25	4	90	1½	40	Butt-weld DIN-EN 10220	ICFS 25	ICFF 25	ICFE 25	ICFR 25A			16.1	35.4	027L4192
ICF 20	4	90	¾	20	Socket weld, ANSI (B 16.11)	ICFS 20	ICFF 20E	ICM 20-A33	ICFB 20			7.2	15.8	027L3362
ICF 20	4	90	1	25	Socket weld, ANSI (B 16.11)	ICFR 20A	ICFF 20E	ICFE 20	ICFN 20			7.2	15.8	027L4179
ICF 20	4	90	1	25	Socket weld, ANSI (B 16.11)	ICFR 20B	ICFF 20E	ICFE 20H	ICFN 20			7.9	17.4	027L4578
ICF 20	4	90	1	25	Socket weld, ANSI (B 16.11)	ICFB 20	ICFF 20	ICFE 20	ICFN 20			7.0	15.4	027L3357
ICF 25	4	90	1	25	Socket weld, ANSI (B 16.11)	ICFB 25	ICFF 25E	ICFE 25	ICFN 25			14.1	31.0	027L4149
ICF 25	4	90	1	25	Socket weld, ANSI (B 16.11)	ICFS 25	ICFF 25E	ICFB 25	ICFR 25A			16.1	35.5	027L4180
ICF 25	4	90	1½	40	Socket weld, ANSI (B 16.11)	ICFS 25	ICFF 25E	ICFB 25	ICFR 25A			16.1	35.5	027L4181
ICF 20	4	90	¾		Socket weld, ANSI (B 16.11)	ICFB 20	ICFD 20C	ICFE 20	ICFB 20					027L3605
ICF 20	6	90	¾	20	Socket weld, ANSI (B 16.11)	ICFS 20	ICFF 20E	ICFE 20	ICFO 20	ICFA 20	ICFS 20	9.3	20.5	027L3055
ICF 20	6	90	¾	20	Socket weld, ANSI (B 16.11)	ICFS 20	ICFF 20E	ICFA 20	ICFC 20	ICFB 20	ICFS 20	9.9	21.8	027L3058
ICF 20	6	90	¾	20	Socket weld, ANSI (B 16.11)	ICFS 20	ICFF 20E	ICFE 20	ICFO 20	ICFB 20	ICFN 20	9.4	20.7	027L3150
ICF 20	6	90	¾	20	Socket weld, ANSI (B 16.11)	ICFS 20	ICFF 20E	ICFE 20H	ICFC 20	ICFW 20S	ICFS 20	10.4	22.9	027L4153
ICF 20	4	90	1		Socket weld, ANSI (B 16.11)	ICFB 20	ICFD 20C	ICFE 20	ICFB 20					027L3606
ICF 20	6	90	1	25	Socket weld, ANSI (B 16.11)	ICFS 20	ICFF 20E	ICFE 20H	ICFC 20	ICFW 20S	ICFS 20	11.5	25.3	027L3377
ICF 25	6	90	1	25	Socket weld, ANSI (B 16.11)	ICFS 25	ICFF 25E	ICFE 25	ICFC 25	ICFB 25	ICFS 25	23.1	50.8	027L4156
ICF 25	6	90	1	25	Socket weld, ANSI (B 16.11)	ICFS 25	ICFF 25E	ICFE 25	ICFC 25	ICFW 25S	ICFS 25	25.1	55.2	027L4158
ICF 20	6	90	1¼	32	Socket weld, ANSI (B 16.11)	ICFS 20	ICFF 20E	ICFE 20H	ICFC 20	ICFB 20	ICFS 20	10.5	23.1	027L3378
ICF 20	6	90	1¼	32	Socket weld, ANSI (B 16.11)	ICFS 20	ICFF 20E	ICFE 20H	ICFC 20	ICFW 20S	ICFS 20	10.5	23.1	027L4152
ICF 25	6	90	1¼	32	Socket weld, ANSI (B 16.11)	ICFS 25	ICFF 25E	ICFE 25	ICFC 25	ICFW 25S	ICFS 25	25.1	55.2	027L4154
ICF 25	6	90	1½	40	Socket weld, ANSI (B 16.11)	ICFS 25	ICFF 25E	ICFE 25	ICFC 25	ICFW 25S	ICFS 25	25.1	55.2	027L4159
ICF 20	4	90	¾	20	Butt-weld DIN-EN 10220	ICFB 20	ICFD 20	ICFE 20	ICFB 20			12.4	27.3	027L3483
ICF 20	4	90	1	25	Butt-weld DIN-EN 10220	ICFB 20	ICFD 20	ICFE 20	ICFB 20			12.4	27.3	027L3484
ICF 20	4	90	1¼	32	Butt-weld DIN-EN 10220	ICFB 20	ICFD 20	ICFE 20	ICFB 20			12.4	27.3	027L3485
ICF 20	4	90	¾	20	Butt-weld DIN-EN 10220	ICFS 20	ICFD 20	ICFE 20	ICFN 20			12.1	26.7	027L3711
ICF 20	6	90	¾	20	Socket weld, ANSI (B 16.11)	ICFS 20	ICFB 20	ICFE 20	ICFD 20	ICFB 20	ICFS 20	15.0	33.1	027L3463
ICF 20	6	90	1	25	Socket weld, ANSI (B 16.11)	ICFS 20	ICFB 20	ICFE 20	ICFD 20	ICFB 20	ICFS 20	15.0	33.1	027L3464
ICF 20	6	90	1¼	32	Socket weld, ANSI (B 16.11)	ICFS 20	ICFB 20	ICFE 20	ICFD 20	ICFB 20	ICFS 20	15.0	33.1	027L3465

Note!
For special applications that cannot be covered by our predefined ICF code numbers please consult Coolselector®2 or your local Danfoss Sales company.
http://refrigerationandairconditioning.danfoss.com/support-center/apps-and-software/coolselector/

Prior to designing „non standard" configurations there are some basic restrictions to the location of the function modules that must be followed (see page 38)

ICAD and coils are not included and must be ordered separately.
***Please Note**: When used in systems with CO_2, the o-rings on the ICM module can swell (grow). At service, it is therefore recommended to install new o-rings, before the ICM function module is re-installed in the ICF valve body.*

© Danfoss | DCS (MS) | 2019.09

Defrost drain line

Application 101D1P1 (Ammonia): Liquid drain M2, loaded check valve without solenoid - 1 shut-off

Type	# of modules	Appl. #	Connection size		Connection type	Module location						Weight		Code number
			[in.]	[mm]		M1	M2	M3	M4	M5	M6	kg	lbs	
ICF 20	4	101	¾	20	Socket weld, ANSI (B 16.11)	ICFS 20	ICFD 20	ICFB 20	ICFC 20P1			12.6	27.7	027L3628
ICF 20	4	101	1	25	Socket weld, ANSI (B 16.11)	ICFS 20	ICFD 20	ICFB 20	ICFC 20P1			12.6	27.7	027L3629
ICF 20	4	101	1¼	32	Socket weld, ANSI (B 16.11)	ICFS 20	ICFD 20	ICFB 20	ICFC 20P1			12.6	27.7	027L3630

Application 102D1 (Ammonia): Liquid drain M2 with solenoid - 2 shut-off

Type	# of modules	Appl. #	Connection size		Connection type	Module location						Weight		Code number
			[in.]	[mm]		M1	M2	M3	M4	M5	M6	kg	lbs	
ICF 20	4	102	¾	20	Butt-weld DIN-EN 10220	ICFS 20	ICFD 20	ICFE 20	ICFS 20			12.7	28	027L3489
ICF 20	4	102	1	25	Butt-weld DIN-EN 10220	ICFS 20	ICFD 20	ICFE 20	ICFS 20			12.7	28	027L3490
ICF 20	4	102	1¼	32	Butt-weld DIN-EN 10220	ICFS 20	ICFD 20	ICFE 20	ICFS 20			12.7	28	027L3491
ICF 20	4	102	¾	20	Socket weld, ANSI (B 16.11)	ICFS 20	ICFD 20	ICFE 20	ICFS 20			13.2	29.1	027L3480
ICF 20	4	102	1	25	Socket weld, ANSI (B 16.11)	ICFS 20	ICFD 20	ICFE 20	ICFS 20			13.1	29.1	027L3481
ICF 20	4	102	1¼	32	Socket weld, ANSI (B 16.11)	ICFS 20	ICFD 20	ICFE 20	ICFS 20			12.5	27.6	027L3482

Application 102D2 (CO_2): Liquid drain M2 with solenoid - 2 shut-off

Type	# of modules	Appl. #	Connection size		Connection type	Module location						Weight		Code number
			[in.]	[mm]		M1	M2	M3	M4	M5	M6	kg	lbs	
ICF 20	4	102	¾	20	Butt-weld DIN-EN 10220	ICFS 20	ICFD 20C	ICFE 20	ICFS 20					027L3601
ICF 20	4	102	1	25	Butt-weld DIN-EN 10220	ICFS 20	ICFD 20C	ICFE 20	ICFS 20					027L3602
ICF 20	4	102	1¼	32	Butt-weld DIN-EN 10220	ICFS 20	ICFD 20C	ICFE 20	ICFS 20					027L3612
ICF 20	4	102	¾	20	Socket weld, ANSI (B 16.11)	ICFS 20	ICFD 20C	ICFE 20	ICFS 20					027L3607
ICF 20	4	102	1	25	Socket weld, ANSI (B 16.11)	ICFS 20	ICFD 20C	ICFE 20	ICFS 20					027L3608

Application 103D1 (Ammonia): Liquid drain M4 with solenoid - 1 shut-off

Type	# of modules	Appl. #	Connection size		Connection type	Module location						Weight		Code number
			[in.]	[mm]		M1	M2	M3	M4	M5	M6	kg	lbs	
ICF 20	4	103	¾	20	Socket weld, ANSI (B 16.11)	ICFS 20	ICFB 20	ICFE 20	ICFD 20			12.6	27.8	027L3460
ICF 20	4	103	1	25	Socket weld, ANSI (B 16.11)	ICFS 20	ICFB 20	ICFE 20	ICFD 20			12.5	27.8	027L3461
ICF 20	4	103	1¼	32	Socket weld, ANSI (B 16.11)	ICFS 20	ICFB 20	ICFE 20	ICFD 20			11.9	26.2	027L3462

Application 104D1 (Ammonia): Liquid drain M4 with strainer and solenoid - 1 shut-off

Type	# of modules	Appl. #	Connection size		Connection type	Module location						Weight		Code number
			[in.]	[mm]		M1	M2	M3	M4	M5	M6	kg	lbs	
ICF 15	4	104	¾	20	Butt-weld DIN-EN 10220	ICFS 15	ICFF 15	ICFE 20	ICFD 20			13.6	30	027L4589
ICF 20	4	104	1	25	Butt-weld DIN-EN 10220	ICFS 20	ICFF 20	ICFE 20	ICFD 20			12.1	26.7	027L3597
ICF 20	4	104	1¼	32	Butt-weld DIN-EN 10220	ICFS 20	ICFF 20E	ICFE 20	ICFD 20			12.6	27.7	027L3170

Application 104D2 (CO_2): Liquid drain M4 with strainer and solenoid - 1 shut-off

Type	# of modules	Appl. #	Connection size		Connection type	Module location						Weight		Code number
			[in.]	[mm]		M1	M2	M3	M4	M5	M6	kg	lbs	
ICF 15	4	104	¾	20	Butt-weld DIN-EN 10220	ICFS 15	ICFF 15	ICFE 20	ICFD 20C					027L3611

Application 105D1 (Ammonia): Liquid drain M2 with solenoid - 1 shut-off

Type	# of modules	Appl. #	Connection size		Connection type	Module location						Weight		Code number
			[in.]	[mm]		M1	M2	M3	M4	M5	M6	kg	lbs	
ICF 20	4	105	¾	20	Butt-weld DIN-EN 10220	ICFS 20	ICFD 20	ICFE 20	ICFB 20			12.1	26.7	027L3486
ICF 20	4	105	1	25	Butt-weld DIN-EN 10220	ICFS 20	ICFD 20	ICFE 20	ICFB 20			12.1	26.7	027L3487
ICF 20	4	105	1¼	32	Butt-weld DIN-EN 10220	ICFS 20	ICFD 20	ICFE 20	ICFB 20			12.1	26.7	027L3488

Application 105D2 (CO_2): Liquid drain M2 with solenoid - 1 shut-off

Type	# of modules	Appl. #	Connection size		Connection type	Module location						Weight		Code number
			[in.]	[mm]		M1	M2	M3	M4	M5	M6	kg	lbs	
ICF 20	4	105	¾	20	Butt-weld DIN-EN 10220	ICFS 20	ICFD 20C	ICFE 20	ICFB 20					027L3603
ICF 20	4	105	1	25	Butt-weld DIN-EN 10220	ICFS 20	ICFD 20C	ICFE 20	ICFB 20					027L3604

Application 106D1 (Ammonia): Liquid drain M2 with solenoid and manual opener - 1 shut off

Type	# of modules	Appl. #	Connection size		Connection type	Module location						Weight		Code number
			[in.]	[mm]		M1	M2	M3	M4	M5	M6	kg	lbs	
ICF 20	4	106	¾	20	Socket weld, ANSI (B 16.11)	ICFS 20	ICFD 20	ICFE 20	ICFO 20			12.9	28.4	027L3551
ICF 20	4	106	1	25	Socket weld, ANSI (B 16.11)	ICFS 20	ICFD 20	ICFE 20	ICFO 20			12.9	28.4	027L3496
ICF 20	4	106	1¼	32	Socket weld, ANSI (B 16.11)	ICFS 20	ICFD 20	ICFE 20	ICFO 20			12.9	28.4	027L3497

Application 107D1 (Ammonia): Liquid drain M2 with solenoid and manual opener - 2 shut off

Type	# of modules	Appl. #	Connection size		Connection type	Module location						Weight		Code number
			[in.]	[mm]		M1	M2	M3	M4	M5	M6	kg	lbs	
ICF 20	6	107	¾	20	Socket weld, ANSI (B 16.11)	ICFS 20	ICFD 20	ICFE 20	ICFO 20	ICFB 20	ICFS 20	15.7	34.5	027L3498
ICF 20	6	107	1	25	Socket weld, ANSI (B 16.11)	ICFS 20	ICFD 20	ICFE 20	ICFO 20	ICFB 20	ICFS 20	15.7	34.5	027L3499
ICF 20	6	107	1¼	32	Socket weld, ANSI (B 16.11)	ICFS 20	ICFD 20	ICFE 20	ICFO 20	ICFB 20	ICFS 20	15.7	34.5	027L3550

Application 108D1 (Ammonia): Liquid drain M2 without solenoid - 2 shut off

Type	# of modules	Appl. #	Connection size		Connection type	Module location						Weight		Code number
			[in.]	[mm]		M1	M2	M3	M4	M5	M6	kg	lbs	
ICF 20	4	108	¾	20	Socket weld, ANSI (B 16.11)	ICFS 20	ICFD 20	ICFB 20	ICFS 20			11.9	26.2	027L3558
ICF 20	4	108	1	25	Socket weld, ANSI (B 16.11)	ICFS 20	ICFD 20	ICFB 20	ICFS 20			11.9	26.2	027L3559
ICF 20	4	108	1¼	32	Socket weld, ANSI (B 16.11)	ICFS 20	ICFD 20	ICFB 20	ICFS 20			11.9	26.2	027L3560

Application 109D2 (CO_2): Liquid drain M2 with solenoid and stop/check - 1 shut off

Type	# of modules	Appl. #	Connection size		Connection type	Module location						Weight		Code number
			[in.]	[mm]		M1	M2	M3	M4	M5	M6	kg	lbs	
ICF 20	4	109	¾	20	Butt-weld DIN-EN 10220	ICFS 20	ICFD 20C	ICFE 20	ICFN 20					027L3609
ICF 20	4	109	1	25	Butt-weld DIN-EN 10220	ICFS 20	ICFD 20C	ICFE 20	ICFN 20					027L3610

Application 110D1P1 (Ammonia): Liquid drain M2, loaded check valve without solenoid - 2 shut-off

Type	# of modules	Appl. #	Connection size		Connection type	Module location						Weight		Code number
			[in.]	[mm]		M1	M2	M3	M4	M5	M6	kg	lbs	
ICF 20	6	110	¾	20	Socket weld, ANSI (B 16.11)	ICFS 20	ICFD 20	ICFB 20	ICFC 20P1	ICFB 20	ICFS 20	12.6	27.7	027L3625
ICF 20	6	110	1	25	Socket weld, ANSI (B 16.11)	ICFS 20	ICFD 20	ICFB 20	ICFC 20P1	ICFB 20	ICFS 20	12.6	27.7	027L3626
ICF 20	6	110	1¼	32	Socket weld, ANSI (B 16.11)	ICFS 20	ICFD 20	ICFB 20	ICFC 20P1	ICFB 20	ICFS 20	12.6	27.7	027L3627

ICAD and coils are not included and must be ordered separately.

Possible module locations

Module locations are indicated by M1, M2, M3, M4, M5 and M6.
With respect to refrigerant flow, M1 is closest to inlet.

ICF 15 with four modules

Function Module Type		Can be installed in these locations			
ICFS	Shut-off valve module	*(ICFS 15)	*(ICFF 15)		M4
ICFR	Manual regulating valve module	*(ICFS 15)	*(ICFF 15)		M4
ICFF	Strainer module	*(ICFS 15)	*(ICFF 15)		
ICFE	Solenoid valve module	*(ICFS 15)	*(ICFF 15)	M3	
ICFC	Check valve module	*(ICFS 15)	*(ICFF 15)		M4
ICFN	Stop & check valve module	*(ICFS 15)	*(ICFF 15)		M4
ICM	Motor operated valve module	*(ICFS 15)	*(ICFF 15)	M3	
ICFB	Blind top cover	*(ICFS 15)	*(ICFF 15)	M3	M4
ICFA	Electronic expansion valve module (for ICF 20 only)	*(ICFS 15)	*(ICFF 15)	M3	
ICFO	Manual opening module	*(ICFS 15)	*(ICFF 15)		M4
ICFW	Welding module	*(ICFS 15)	*(ICFF 15)	M3	M4
ICFD	Drain module (for ICF 15 and 20 only)	*(ICFS 15)	*(ICFF 15)		M4

ICF 20 and ICF 25 with four modules

Function Module Type		Can be installed in these locations			
ICFS	Shut-off valve module	M1	M2	M3	M4
ICFR	Manual regulating valve module	M1	M2	M3	M4
ICFF	Strainer module		M2		M4
ICFE	Solenoid valve module			M3	
ICFC	Check valve module				M4
ICFN	Stop & check valve module				M4
ICM	Motor operated valve module	M1		M3	
ICFB	Blind top cover	M1	M2	M3	M4
ICFA	Electronic expansion valve module (for ICF 20 only)	M1		M3	
ICFE20H	Solenoid valve module (for ICF 20 only)	M1		M3	
ICFO	Manual opening module				M4
ICFW	Welding module	M1	M2	M3	M4
ICFD	Drain module (for ICF 15 and 20 only)		M2		M4

ICF 20 and ICF 25 with six modules

Function Module Type		Can be installed in these locations					
ICFS	Shut-off valve module	M1	M2	M3	M4	M5	M6
ICFR	Manual regulating valve module	M1	M2	M3	M4	M5	M6
ICFF	Strainer module		M2		M4		M6
ICFE	Solenoid valve module			M3			
ICFC	Check valve module				M4		M6
ICFN	Stop & check valve module				M4		M6
ICM	Motor operated valve module	M1		M3		M5	
ICFB	Blind top cover	M1	M2	M3	M4	M5	M6
ICFA	Electronic expansion valve module (for ICF 20 only)	M1		M3		M5	
ICFE20H	Solenoid valve module (for ICF 20 only)	M1		M3		M5	
ICFO	Manual opening module				M4		
ICFW	Welding module	M1	M2	M3	M4	M5	M6
ICFD	Drain module (for ICF 15 and 20 only)		M2		M4		M6

ICF 50 with four modules

Function Module Type		Can be installed in these locations			
SVA-S	Shut-off valve module	*(SVA-S 50)			M4
ICFB	Blind top cover	*(SVA-S 50)	M2		
FIA	Strainer module	*(SVA-S 50)	M2		
ICS	Pilot-operated valve module	*(SVA-S 50)		M3	
ICM	Motor operated valve module	*(SVA-S 50)		M3	
ICLX	2-step solenoid valve module	*(SVA-S 50)		M3	
REG-SB	Manual regulating valve module	*(SVA-S 50)			M4

ICF 65 with three modules

Function Module Type		Can be installed in these locations			
SVA-S	Shut-off valve module	*(SVA-S 65)			M4
ICFB	Blind top cover	*(SVA-S 65)			
FIA	Strainer module	*(SVA-S 65)			
ICS	Pilot-operated valve module	*(SVA-S 65)		M3	
ICM	Motor operated valve module	*(SVA-S 65)		M3	
ICLX	2-step solenoid valve module	*(SVA-S 65)		M3	
REG-SB	Manual regulating valve module	*(SVA-S 65)			M4

location not possible

**) Module is fixed*

© Danfoss | DCS (MS) | 2019.09

Ordering accessories

Stop valve type SNV-ST

	Description	Code no.
	G½ in. (Qty. 1)	**148B3778**
	NPT-FPT ⅜ in. (Qty. 1)	**148B3747**

Other SNV types see literature: AI244986497087

For complete list of Spare parts and accessories for ICF 15 to 65 (including SS versions) please refer to AI242886444256

ICAD 600A/ICAD 1200A

Description		Code no.
ICAD 600A for ICF 15 to 25	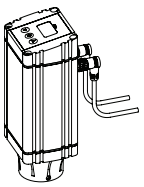	With 1.5 m. cables **027H9075**
		Without cables **027H9120**
ICAD 1200A for ICF 50 and 65	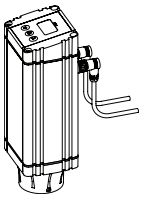	With 1.5 m. cables **027H9077**
		Without cables **027H9122**
Cable	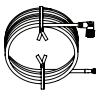	Cable set 10 m. **027H0427**
Cable		Cable set 15 m. **027H0435**
Connector		Connector set female **027H0430**
Protection cap	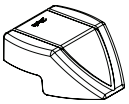	Protection cap for ICAD **027H0431**

ICAD details see literature: AI236186442940

Coils

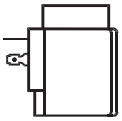

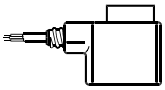

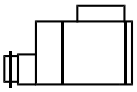

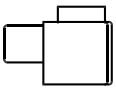

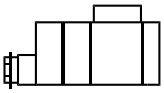

Valve type	Voltage V	Frequency Hz	Code no. With 1 m 3-core cable IP 67	Code no. With terminal box IP 67	Code no. With DIN plugs**)	Appen-dix no.*)	Power con-sumption
Alternating current a.c.							
ICFE ICS/ICLX (MOPD < 21 Bar)	12	50		**018F6706**		15	Holding: 10 W 21 VA Inrush: 44 VA
	24	50	**018F6257**	**018F6707**	**018F7358**	16	
	220-230	50	**018F6251**	**018F6701**	**018F7351**	31	
	115	60	**018F6260**	**018F6710**		20	
Direct current d.c.							
ICFE/ICFA ICS/ICLX (MOPD < 21 Bar)	12			**018F6856**		01	20 W
	24			**018F6857**		02	

Special coils for ICFE

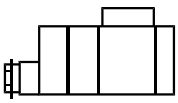

Valve type	Voltage V	Frequency Hz	Code no. With terminal box IP 67	Appendix no. Indicates voltage and frequency	Power consumption
Alternating current a.c.					
ICFE ICS/ICLX (MOPD < 21 Bar)	24	50	**018F6807**	16	Holding: 12 W 26 VA Inrush: 55 VA
	110	50	**018F6811**	22	
	220-230	50	**018F6801**	31	

For other coil types please refer to the technical leaflets for EVRA, AKVA, ICS or ICLX valves.

Dimensions

ICF 15-4

This example indicates the maximum dimensions for the ICF valve stations.

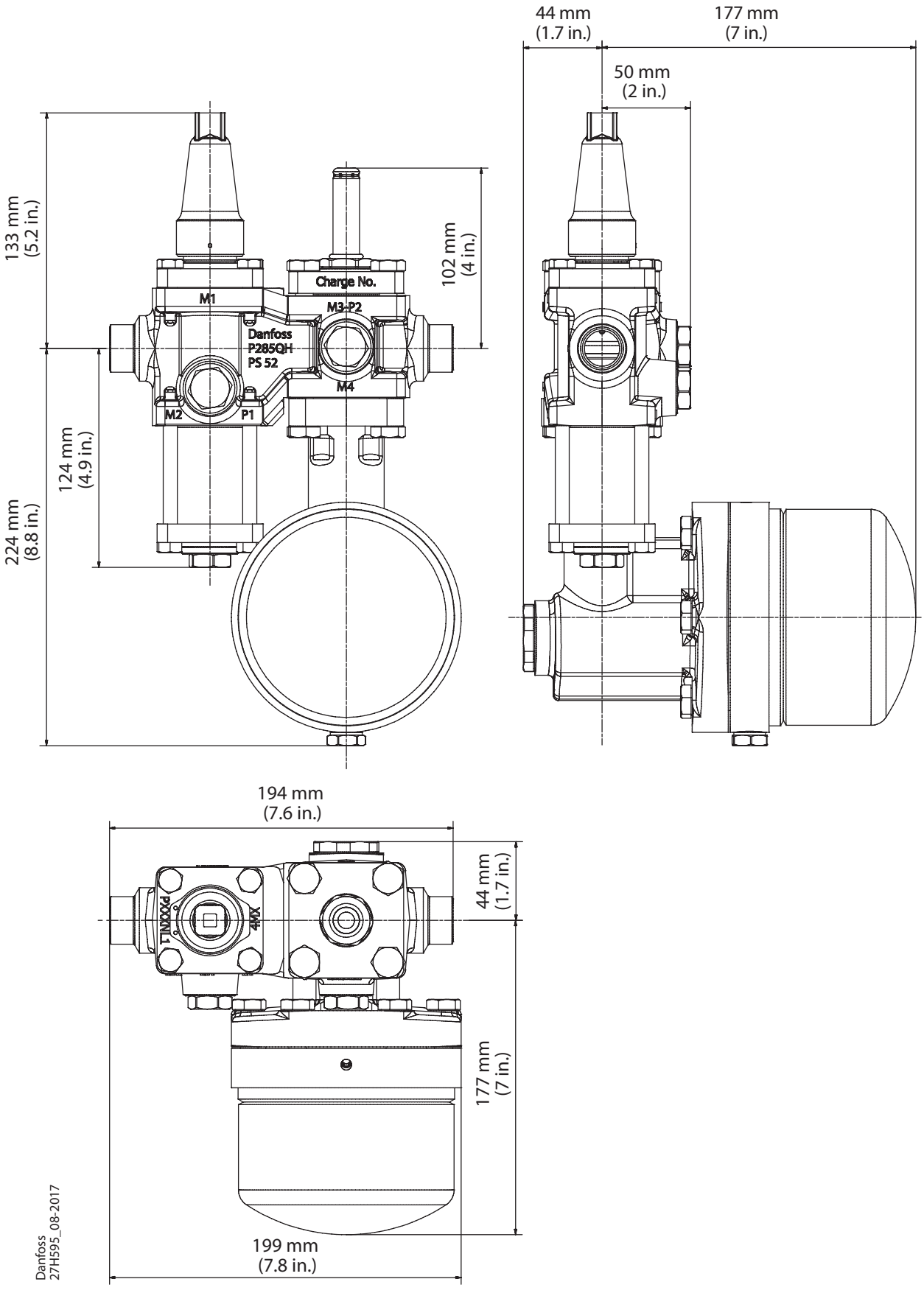

© Danfoss | DCS (MS) | 2019.09

Dimensions

ICF 15-4

This example indicates the maximum dimensions for the ICF valve stations.

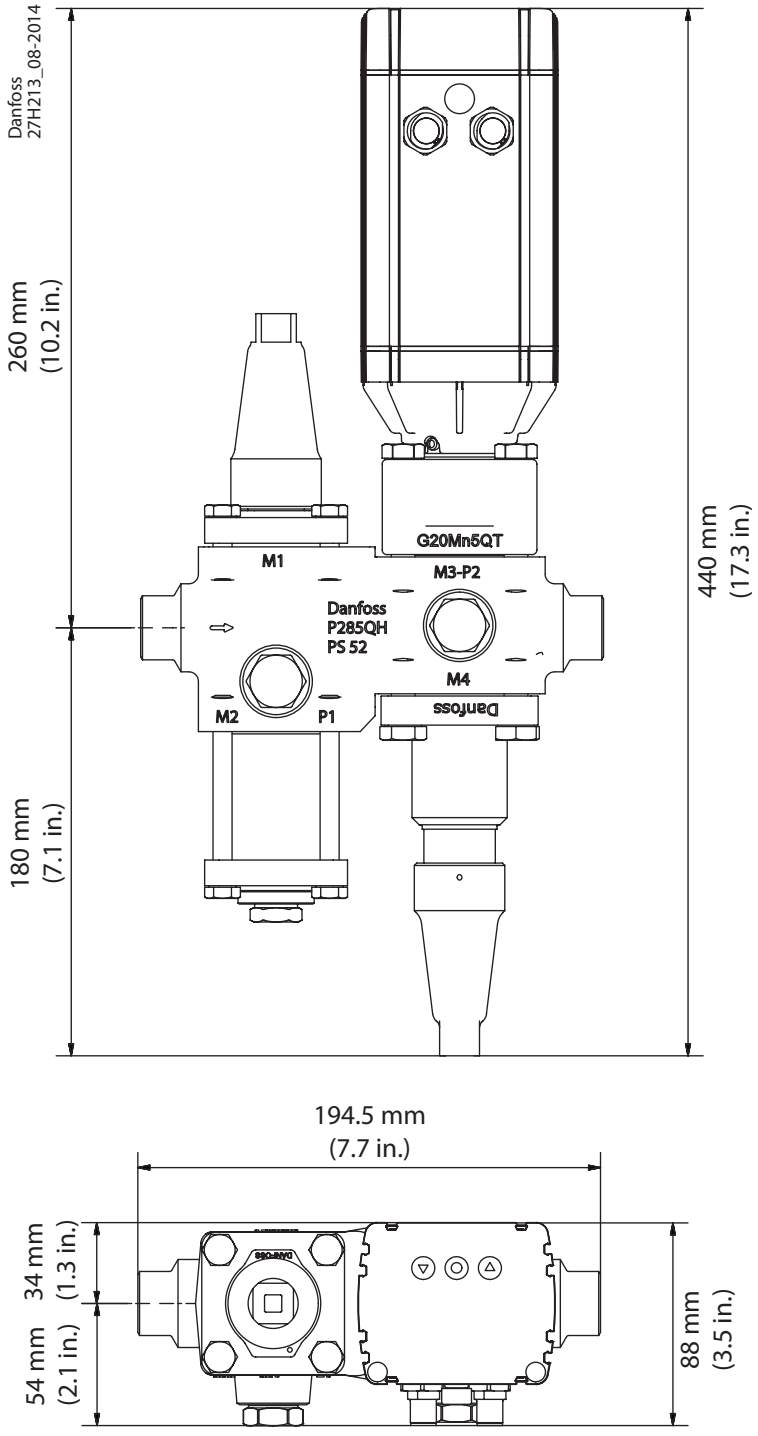

Dimensions *(continued)*

ICF 20-4

This example indicates the maximum dimensions for the ICF valve stations.

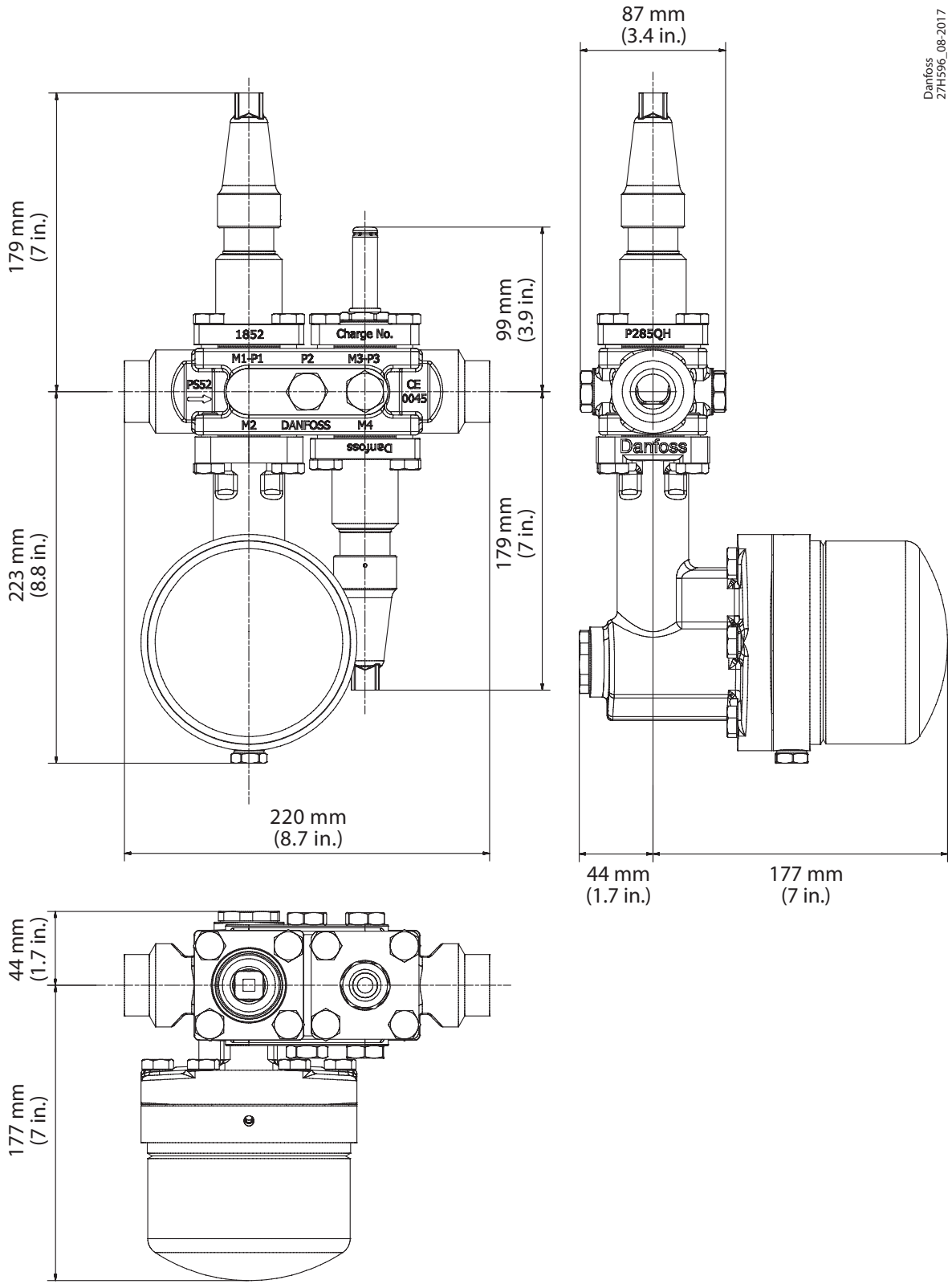

© Danfoss | DCS (MS) | 2019.09

Dimensions *(continued)*

ICF 20-4

This example indicates the maximum dimensions for the ICF valve stations.

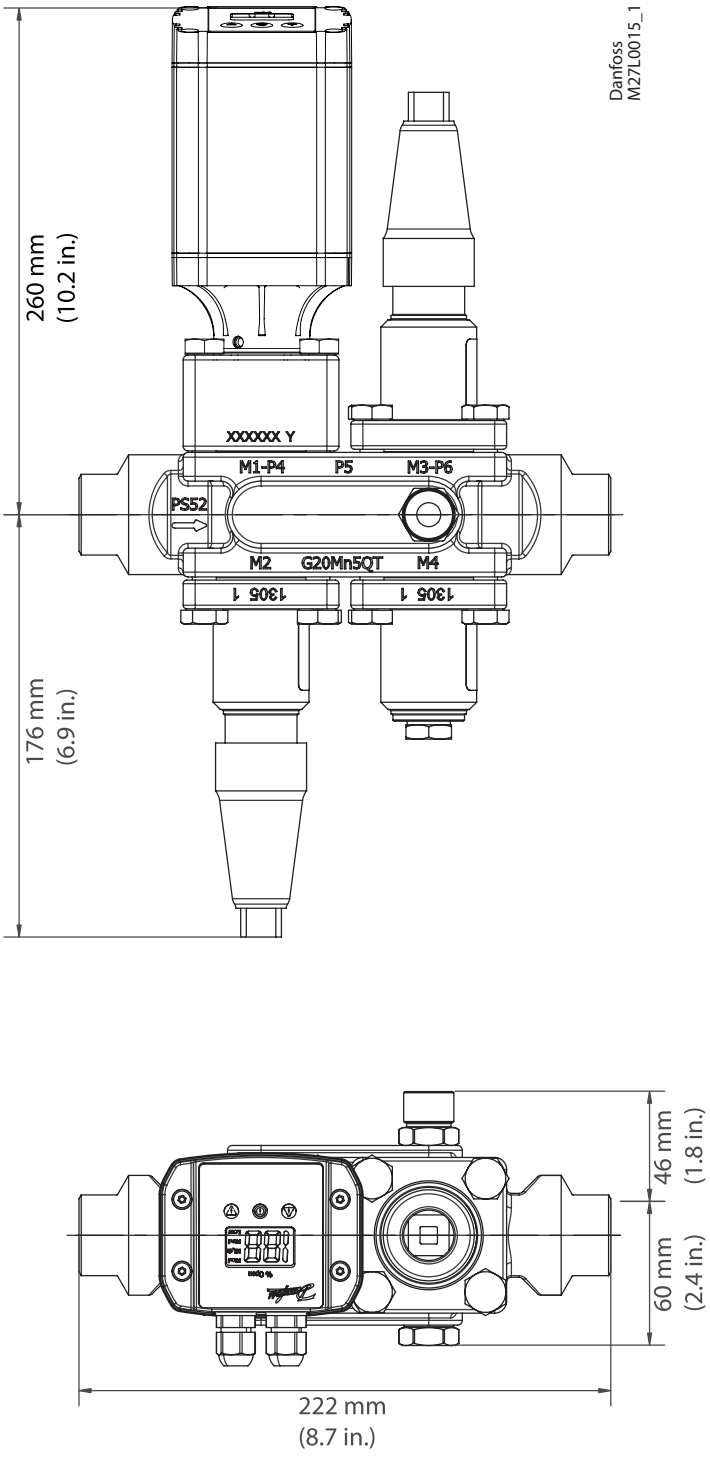

Dimensions *(continued)*

ICF 20-6

This example indicates the maximum dimensions for the ICF valve stations.

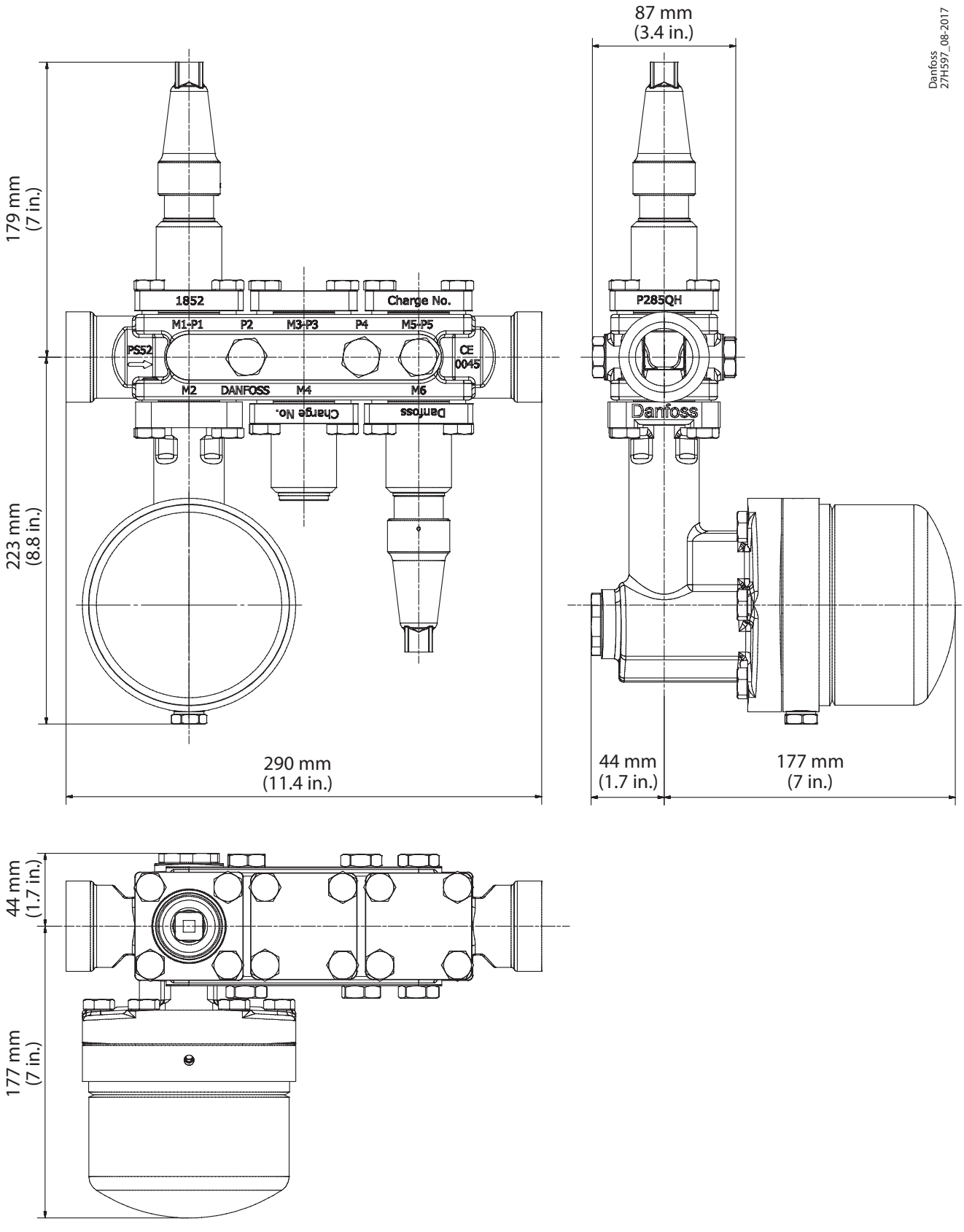

© Danfoss | DCS (MS) | 2019.09

Dimensions *(continued)*

ICF 20-6

This example indicates the maximum dimensions for the ICF valve stations.

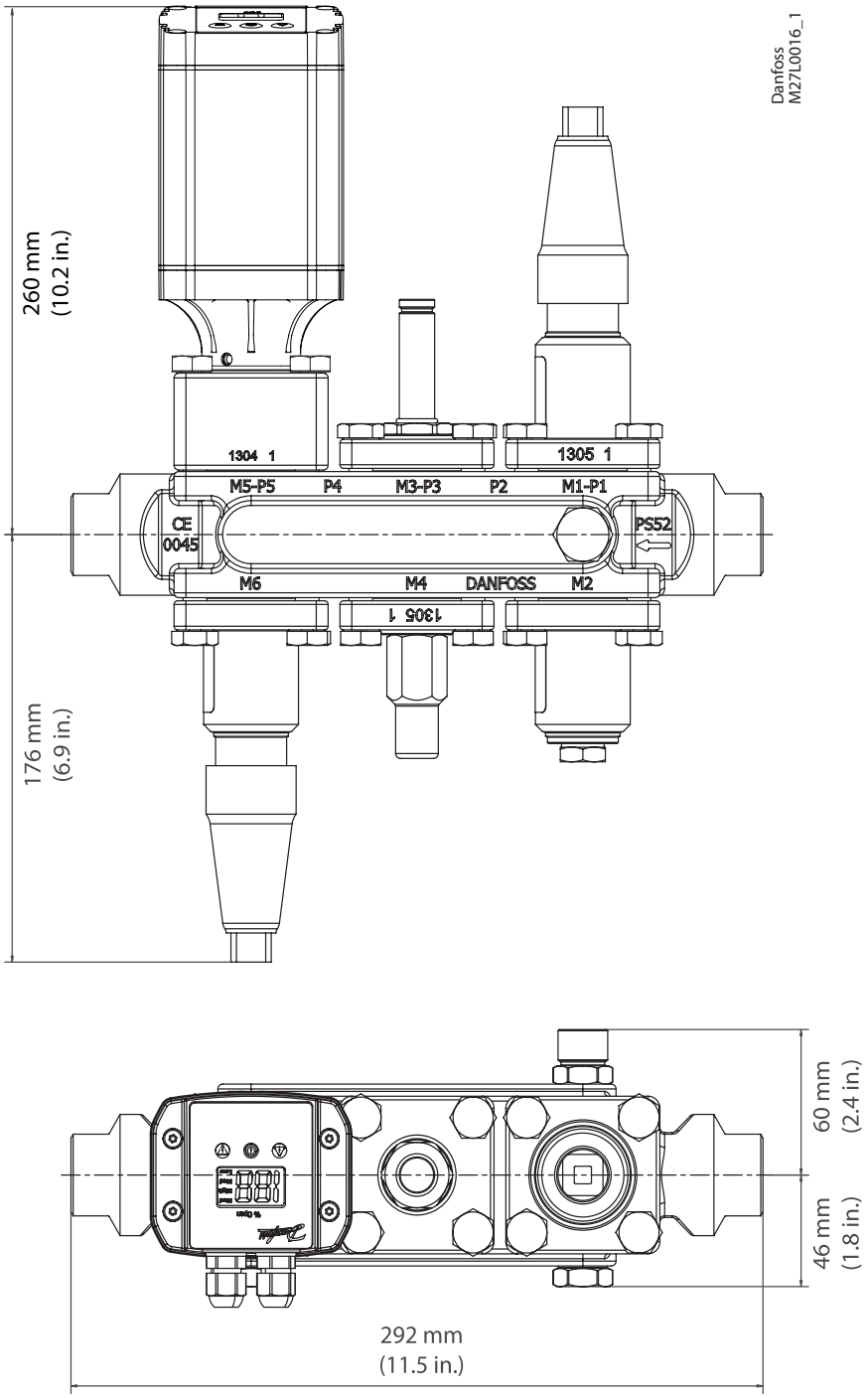

Dimensions *(continued)*

ICF 25-4

This example indicates the maximum dimensions for the ICF valve stations.

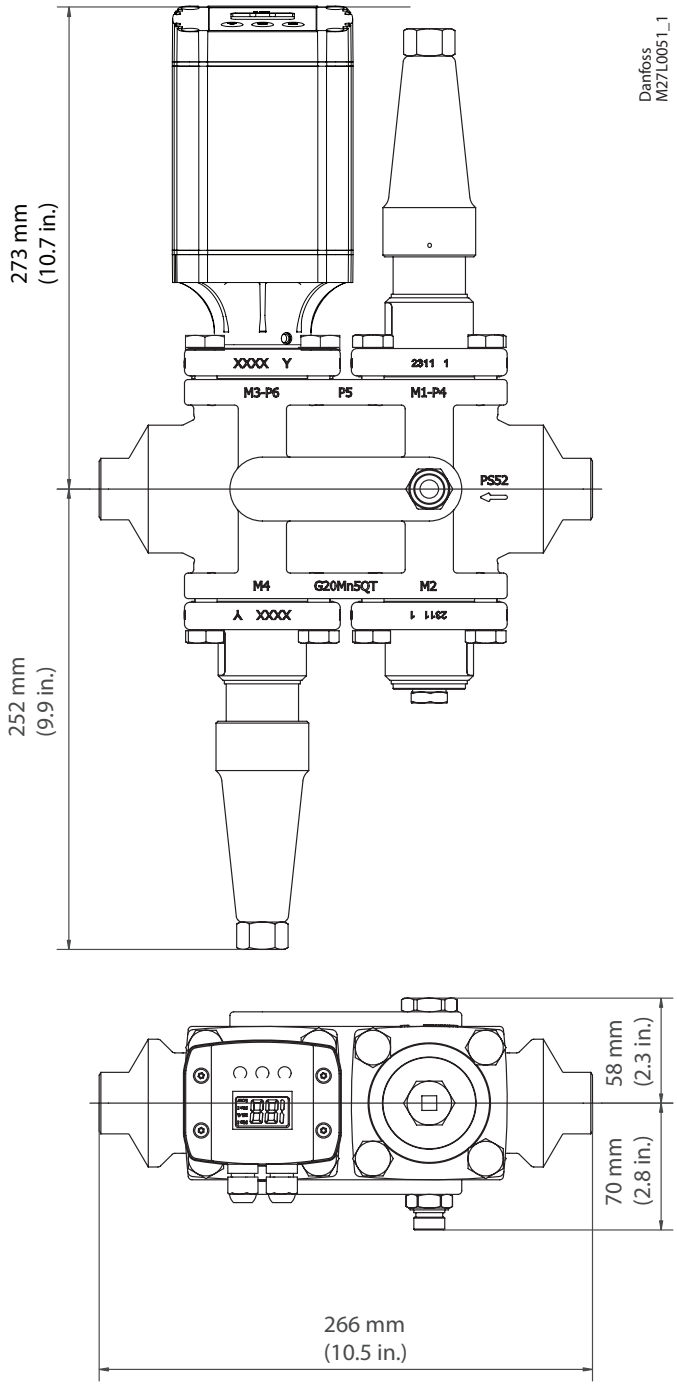

© Danfoss | DCS (MS) | 2019.09

Dimensions *(continued)*

ICF 25-6

This example indicates the maximum dimensions for the ICF valve stations.

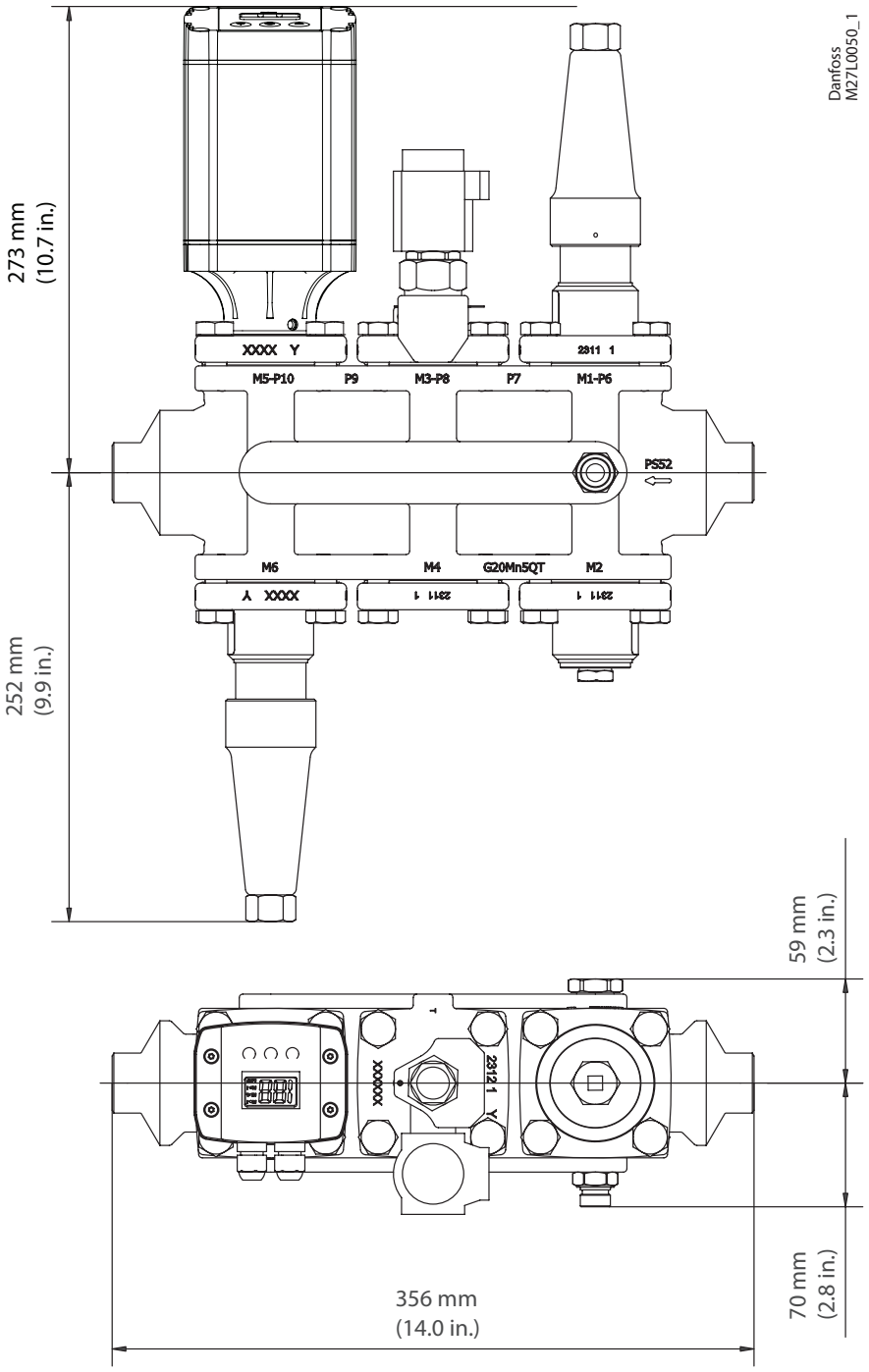

Dimensions *(continued)*

ICF 50-4

This example indicates the maximum dimensions for the ICF valve stations.

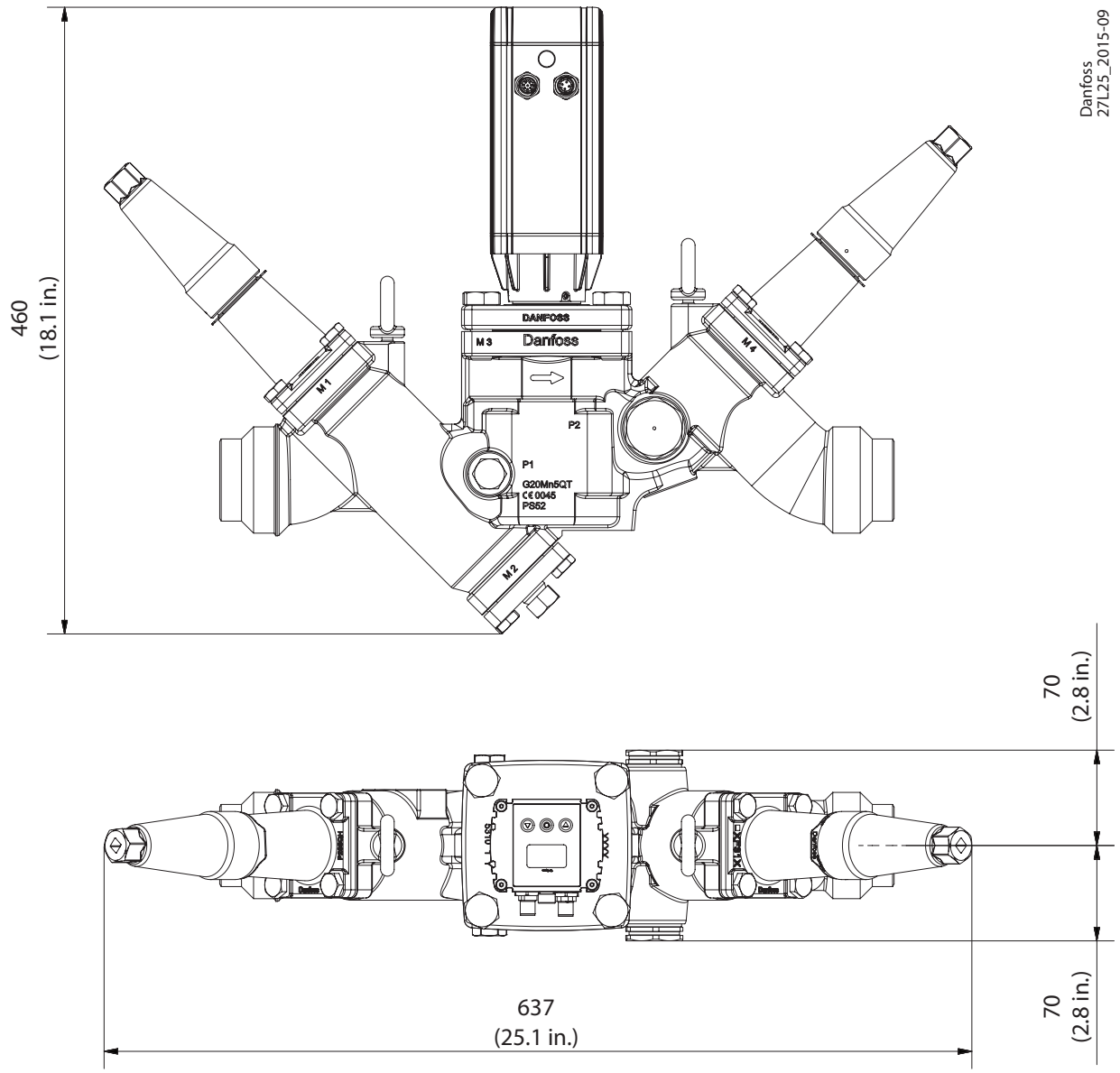

© Danfoss | DCS (MS) | 2019.09

Dimensions *(continued)*

ICF 65-3

This example indicates the maximum dimensions for the ICF valve stations.

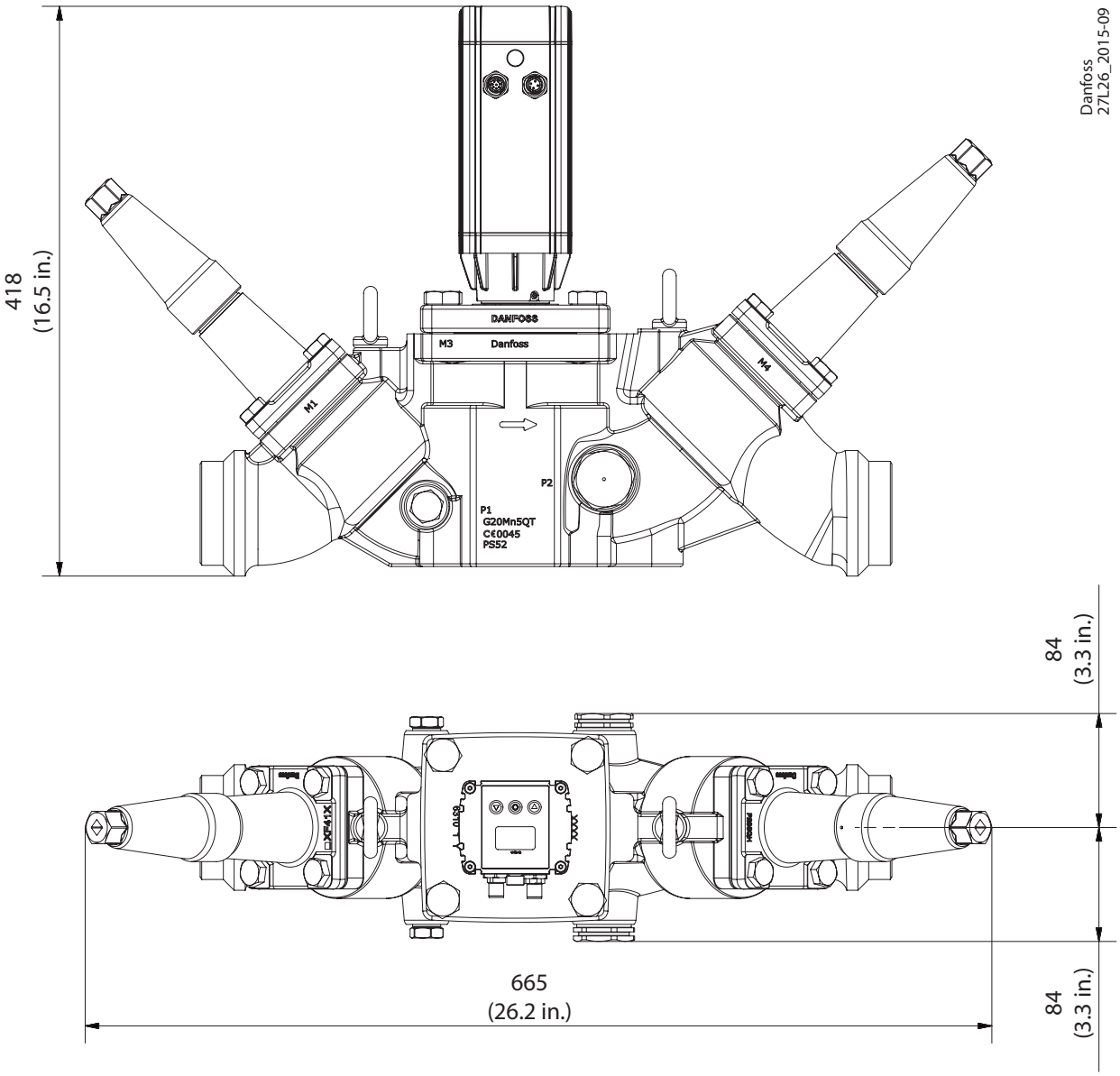

Danfoss can accept no responsibility for possible errors in catalogues, brochures and other printed material. Danfoss reserves the right to alter its products without notice. This also applies to products already on order provided that such alterations can be made without subsequential changes being necessary in specifications already agreed.
All trademarks in this material are property of the respective companies. Danfoss and the Danfoss logotype are trademarks of Danfoss A/S. All rights reserved.