ENGINEERING TOMORROW

Data sheet

Shut-off ball valve
Type GBC Version 2

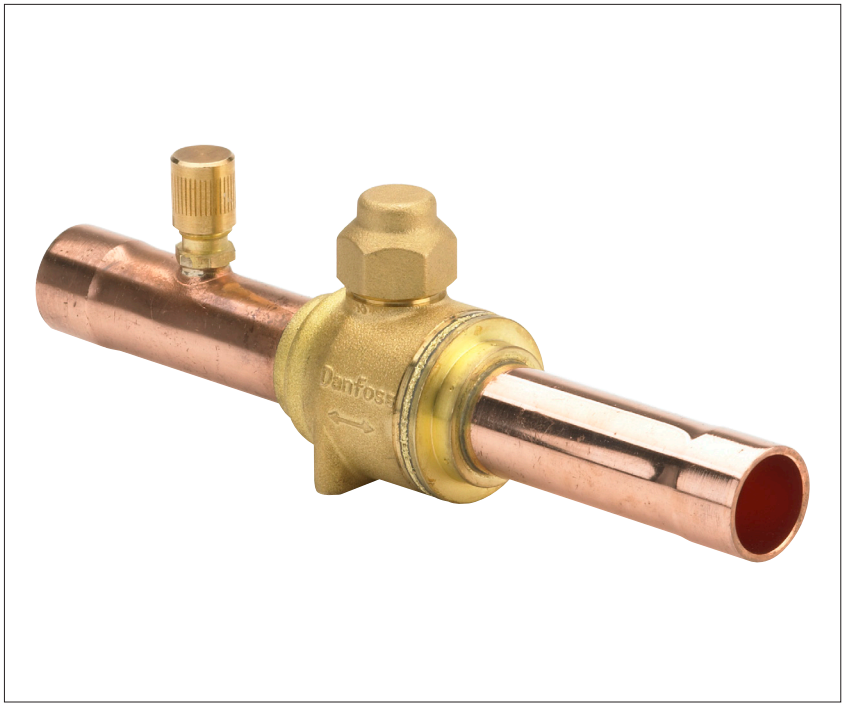

Danfoss shut-off ball valves, type GBC, are manually operated shut-off valves suitable for bi-directional flow.

The GBC valves are used in liquid, suction and hotgas lines in refrigeration and air conditioning systems.

The GBC bi-directional ball valves can be delivered with or without external access port.

The valves have one-piece wire seal cap to prevent unintentional cap removal or tampering between services.

Features

- Broad temperature range equally applicable to freezing, refrigeration and air conditioning applications
- ¼ turn from fully open to fully closed
- Full flow with minimum pressure drop
- Ball status indicator on spindle top indicating open or closed position
- Bi-directional flow, i.e. valve orientation is unimportant
- One-piece seal cap for safety purpose Complies with European Safety Directive EN 378 (Safety and environmental requirements)
- Laser welded construction
- Rupture proof, internally-loaded spindle design ensures safe operation under extreme pressures
- Drilled and tapped for panel mounting
- Versions with access port helps in reducing cost if service of the system is necessary
- Double O-ring stem seal design
- Customized brass material ensures consistent performance under aggressive environment

© Danfoss | DCS (bh) | 2019.12

Approvals

Technical data

Valve type	Max. working pressure	Refrigerants
GBC 6s-28s	45 bar / 650 psig	R134a, R22/R407C, R290, R404A/R507, R407A, R407F, R407H, R410A, R448A, R449A, R449B, R450A, R452A, R452B,R454A, R454B, R454C, R455A, R513A, R515B, R516A, R1234ze(E), R1234yf
GBC 35s-79s	45 bar / 650 psig	R134a, R22/R407C, R404A/R507, R407A, R407F, R407H, R410A, R448A, R449A, R449B, R450A, R452A, R513A, R515B, R1234ze(E)
GBC 6s E-28s E	49 bar / 710 psig	R290, R32, R452B, R454A, R454B, R454C, R455A, R516A, R1234yf
GBC 35s E-79s E	49 bar / 710 psig	R32, R452B, R454A, R454B, R454C, R455A, R516A, R1234yf

For a complete list of approved refrigerants, visit http://store.danfoss.com/ and search for individual code numbers, where refrigerants are listed as part of product details. This product is approved for R290, R32, R452B, R454A, R454B, R454C, R455A, R516A, R1234yf by ignition source assessment in accordance to standard EN13463-1.

Ordering

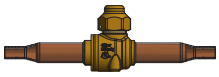

GBC without access port, Solder ODF/ODF, PS = 45 bar

Type	Connection [inch]	Connection [mm]	K_v value [1] [m³/h]	C_v value [1] [gal/min]	Max. working pressure: PS/MWP	Media temperature range [2]	For flammable refrigerant [3]	PED category	Code no. Multi pack
GBC 6s	1/4	–	1.83	2.12	45 bar / 650 psig	-40 °C – 100 °C /-40 °F – 212 °F for long term use >100 °C -150 °C / >212 °F - 300 °F for short term use	Yes	Article 4, Paragraph 3	009L7020
	–	6	1.83	2.12					009L7030
GBC 10s	3/8	–	8.04	9.29					009L7021
	–	10	8.04	9.29					009L7031
GBC 12s	1/2	–	13.17	15.22					009L7022
	–	12	13.17	15.22					009L7032
GBC 16s	5/8	16	15.66	18.10					009L7023
GBC 18s	3/4	–	21.93	25.35					009L7024
	–	18	21.93	25.35					009L7035
GBC 22s	7/8	22	33.34	38.54					009L7025
GBC 28s	1 1/8	–	62.25	71.96					009L7026
	–	28	62.25	71.96					009L7033
GBC 35s	1 3/8	35	92.76	107.23			No		009L7027
GBC 42s	1 5/8	–	134.76	155.78				I	009L7028
	–	42	134.76	155.78					009L7034
GBC 54s	2 1/8	54	240.11	277.57		-40 °C – 100 °C /-40 °F – 212 °F for long term use >100 °C -121 °C / >212 °F - 250 °F for short term use			009L7029
GBC 67s	2 5/8	–	367.38	424.69					009L7959
GBC 67s RP	2 5/8	–	203.12	234.81					009L7036
GBC 79s	3 1/8	–	528.87	611.37					009L7980
GBC 79s RP	3 1/8	–	171.89	198.70					009L7037

GBC with access port, Solder ODF/ODF, PS = 45 bar

Type	Connection [inch]	Connection [mm]	K_v value [1] [m³/h]	C_v value [1] [gal/min]	Max. working pressure: PS/MWP	Media temperature range [2]	For flammable refrigerant [3]	PED category	Code no. Multi pack
GBC 6s	1/4	–	1.83	2.12	45 bar / 650 psig	-40 °C – 100 °C /-40 °F – 212 °F for long term use >100 °C -150 °C / >212 °F - 300 °F for short term use	Yes	Article 4, Paragraph 3	009L7050
	–	6	1.83	2.12					009L7060
GBC 10s	3/8	–	8.04	9.29					009L7051
	–	10	8.04	9.29					009L7061
GBC 12s	1/2	–	13.17	15.22					009L7052
	–	12	13.17	15.22					009L7062
GBC 16s	5/8	16	15.66	18.10					009L7053
GBC 18s	3/4	–	21.93	25.35					009L7054
	–	18	21.93	25.35					009L7065
GBC 22s	7/8	22	33.34	38.54					009L7055
GBC 28s	1 1/8	–	62.25	71.96					009L7056
	–	28	62.25	71.96					009L7063
GBC 35s	1 3/8	35	92.76	107.23			No		009L7057
GBC 42s	1 5/8	–	134.76	155.78				I	009L7058
	–	42	134.76	155.78					009L7064
GBC 54s	2 1/8	54	240.11	277.57		-40 °C – 100 °C /-40 °F – 212 °F for long term use >100 °C -121 °C / >212 °F - 250 °F for short term use			009L7059
GBC 67s	2 5/8	–	367.38	424.69					009L7960
GBC 67s RP	2 5/8	–	203.12	234.81					009L7066
GBC 79s	3 1/8	–	528.87	611.37					009L7981
GBC 79s RP	3 1/8	–	171.89	198.70					009L7067

[1]) Calculated based on fluid dynamic equations. RP: Reduced Port

[2]) For short term use in high temperature application, please consult Danfoss.

[3]) Please refer to the Danfoss refrigerant list for flammable refrigerants, for other flammable refrigerants please contact Danfoss.

GBC without access port, ODF/ODF, PS = 49 bar [1])

Type	Connection		K_v value [2])	C_v value [2])	Max. working pressure: PS/MWP	Media temperature range	For flammable refrigerant [3])	PED category	Code no. Multi pack
	[inch]	[mm]	[m³/h]	[gal/min]					
GBC 6s E	1/4	–	1.83	2.12	49 bar / 710 psig	-40 °C - 100°C / -40 °F - 212°F	Yes	Article 4, Paragraph 3	009L9020
	–	6	1.83	2.12					009L9030
GBC 10s E	3/8	–	8.04	9.29					009L9021
	–	10	8.04	9.29					009L9031
GBC 12s E	1/2	–	13.17	15.22					009L9022
	–	12	13.17	15.22					009L9032
GBC 16s E	5/8	16	15.66	18.10					009L9023
GBC 18s E	3/4	–	21.93	25.35					009L9024
	–	18	21.93	25.35					009L9035
GBC 22s E	7/8	22	33.34	38.54					009L9025
GBC 28s E	1 1/8	–	62.25	71.96					009L9026
	–	28	62.25	71.96					009L9033
GBC 35s E	1 3/8	35	92.76	107.23				II	009L9027
GBC 42s E	1 5/8	–	134.76	155.78					009L9028
	–	42	134.76	155.78					009L9034
GBC 54s E	2 1/8	54	240.11	277.57					009L9029
GBC 67s E	2 5/8	–	367.38	424.69					009L9959
GBC 79s E	3 1/8	–	528.87	611.37					009L9980

GBC with access port, ODF/ODF, PS = 49 bar [1])

Type	Connection		K_v value [2])	C_v value [2])	Max. working pressure: PS/MWP	Media temperature range	For flammable refrigerant [3])	PED category	Code no. Multi pack
	[inch]	[mm]	[m³/h]	[gal/min]					
GBC 6s E	1/4	–	1.83	2.12	49 bar / 710 psig	-40 °C - 100°C / -40 °F - 212°F	Yes	Article 4, Paragraph 3	009L9050
	–	6	1.83	2.12					009L9060
GBC 10s E	3/8	–	8.04	9.29					009L9051
	–	10	8.04	9.29					009L9061
GBC 12s E	1/2	–	13.17	15.22					009L9052
	–	12	13.17	15.22					009L9062
GBC 16s E	5/8	16	15.66	18.10					009L9053
GBC 18s E	3/4	–	21.93	25.35					009L9054
	–	18	21.93	25.35					009L9065
GBC 22s E	7/8	22	33.34	38.54					009L9055
GBC 28s E	1 1/8	–	62.25	71.96					009L9056
	–	28	62.25	71.96					009L9063
GBC 35s E	1 3/8	35	92.76	107.23				II	009L9057
GBC 42s E	1 5/8	–	134.76	155.78					009L9058
	–	42	134.76	155.78					009L9064
GBC 54s E	2 1/8	54	240.11	277.57					009L9059
GBC 67s E	2 5/8	–	367.38	424.69					009L9960
GBC 79s E	3 1/8	–	528.87	611.37					009L9981

[1]) The 49bar GBC can be only used with flammable refrigerants.
The 49bar GBC which belong to PED category II can be only used with R32, R452B, R454A, R454B, R454C, R455A, R516A, R1234yf.

[2]) Calculated based on fluid dynamic equations.

[3]) Please refer to the Danfoss refrigerant list for flammable refrigerants, for other flammable refrigerants please contact Danfoss.

Ordering

GBC without access port, ODF/ ODM, PS = 45 bar

Type	connection		K_v value [1])	C_v value [1])	Max. working pressure: PS/MWP	Media temperature range [2])	For flammable refrigerant [3])	PED category	Code no. Multi pack
	[inch]	[mm]	[m³/h]	[gal/min]					
GBC 22s	7/8	22	33.34	38.54	45 bar / 650 psig	-40 °C – 100 °C /-40 °F – 212 °F for long term use	Yes	Article 4, Paragraph 3	009L7000
GBC 28s	1 1/8	–	62.25	71.96					009L7001
GBC 35s	1 3/8	35	92.76	107.23		>100 °C -150 °C / >212 °F - 300 °F for short term use	No		009L7002
GBC 42s	1 5/8	–	134.76	155.78				I	009L7003
GBC 79s	3 1/8	–	528.87	611.37		-40 °C – 100 °C /-40 °F – 212 °F for long term use >100 °C -121 °C / >212 °F - 250 °F for short term use			009L7969

[1]) calculated based on fluid dynamic equations

[2]) For short term use in high temperature application, please consult Danfoss.

[3]) Please refer to the Danfoss refrigerant list for flammable refrigerants, for other flammable refrigerants please contact Danfoss.

GBC with access port, ODF/ ODM, PS = 45 bar

Type	connection		K_v value [1]	C_v value [1]	Max. working pressure: PS/MWP	Media temperature range [2]	For flammable refrigerant [3]	PED category	Code no. Multi pack
	[inch]	[mm]	[m³/h]	[gal/min]					
GBC 28s	1 1/8	–	62.25	71.96	45 bar / 650 psig	-40 °C – 100 °C /-40 °F – 212 °F for long term use	Yes	Article 4, Paragraph 3	009L7097
GBC 35s	1 3/8	35	92.76	107.23			No		009L7098
GBC 42s	1 5/8	–	134.76	155.78		>100 °C -150 °C / >212 °F - 300 °F for short term use		I	009L7099
GBC 54s	2 1/8	54	240.11	277.57		-40 °C – 100 °C /-40 °F – 212 °F for long term use			009L7069
GBC 67s	2 5/8	–	367.38	424.69					009L7958
GBC 79s	3 1/8	–	528.87	611.37		>100 °C -121 °C / >212 °F - 250 °F for short term use			009L7970

[1]) calculated based on fluid dynamic equations

[2]) For short term use in high temperature application, please consult Danfoss.

[3]) Please refer to the Danfoss refrigerant list for flammable refrigerants, for other flammable refrigerants please contact Danfoss.

Spare parts

Seal cap kit

Type	Valve connection size		Industrial pack [pcs]	Code no. for 009Gxxxx series	Code no. for 009Lxxxx 45bar series	Code no. for 009Lxxxx 49bar series
	[inch]	[mm]				
GBC 6s - GBC 12s	1/4 – 1/2	6 – 12	6	009G7210	009L7209	009L7210
GBC 16s - GBC 22s	5/8 – 7/8	16 – 22	6		009L7210	
GBC 28s - GBC 35s	1 1/8 – 1 3/8	28 – 35	4	009G7211	/	
			3	/	009L7211	
GBC 42s - GBC 79s	1 5/8 – 3 1/8	42 – 79	4	009G7212	/	
			3	/	009L7212	

Bracket kit

Type	Valve connection size		Industrial pack [pcs.]	Code no. for 009Gxxxx series	Code no. for 009Lxxxx 45bar series	Code no. for 009Lxxxx 49bar series
	[inch]	[mm]				
GBC 6s - GBC 12s	1/4 – 1/2	6 – 12	12	009G7084	009G7089	009G7084
GBC 16s	5/8	16	12		009G7084	
GBC 18s - GBC 22s	3/4 – 7/8	18 – 22	12	009G7085		
GBC 28s	1 1/8	28	10	009G7086		
GBC 35s	1 3/8	35	5	009G7087		
GBC 42s	1 5/8	42	4	009G7088		

Design / Function

1. Copper extension tubes
2. Valve body
3. Ball seat (PTFE)
4. Valve tail
5. Stainless steel ball
6. Double O-ring seal in spindle (chloroprene)
7. Cap seal (PTFE)
8. Seal cap
9. Spindle
10. Pin
11. Access port cap
12. Guide ring
13. Valve core

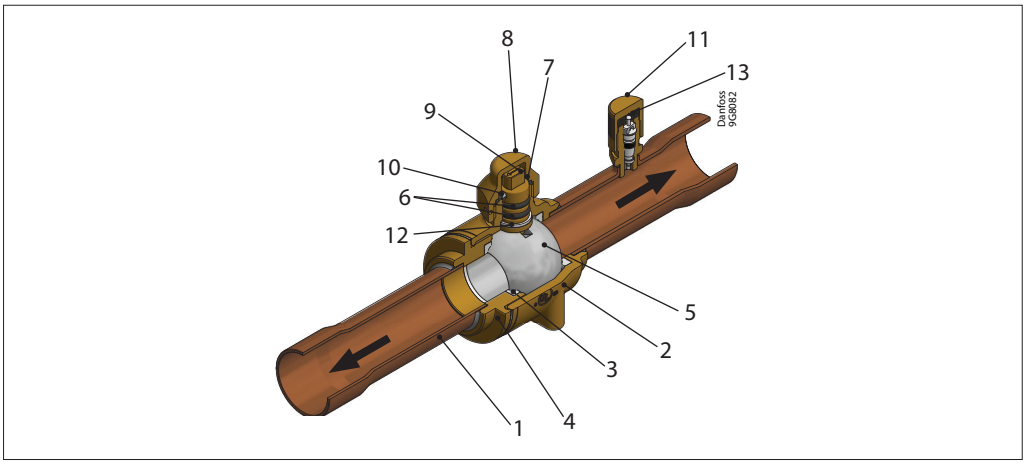

Direct flow gives maximum through-flow with minimum pressure drop across valve. The combination of laser-welded valve body (2) and valve tail (4), ball seat/seal (3), double O-ring seal in spindle (6), and cap seal (7) provides the best tightness.

Dimension and weight-ODF / ODF

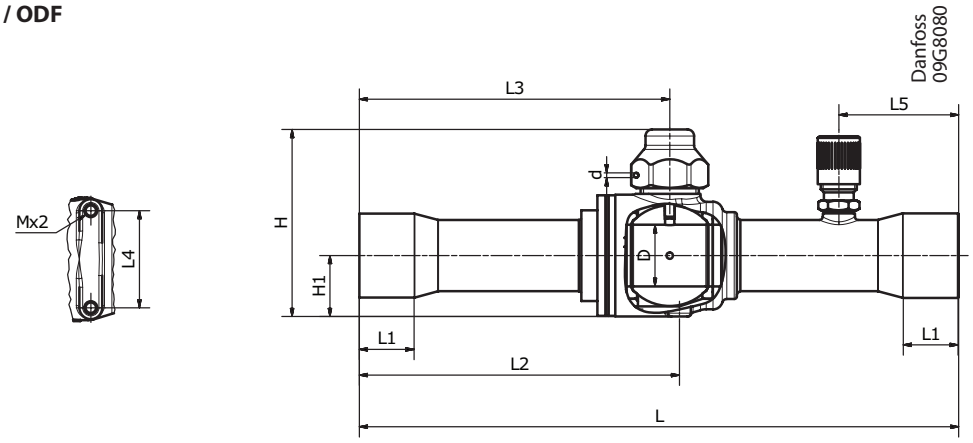

SI units

Type	Access port	Connection		H	H_1	L	L_1	L_2	L_3	L_4	L_5	M	D	d	Weight
		[inch]	[mm]	[mm]	[mm]	[mm]	[mm]	[mm]	[mm]	[mm]	[mm]	[mm]	[mm]	[mm]	[kg] [1])
GBC 6s	Yes/No	1/4	6	43	12	139	7	73	73	16.8	31	M3 × 0.5	11.1	1.5	0.1
GBC 10s	Yes/No	3/8	10	43	12	139	9	73	73	16.8	31	M3 × 0.5	11.1	1.5	0.1
GBC 12s	Yes/No	1/2	12	43	12	161	10	84	84	16.8	31	M3 × 0.5	11.1	1.5	0.1
GBC 16s	Yes/No	5/8	16	50	15	161	12	86	84	22	31	M4 × 0.7	14	1.5	0.2
GBC 18s	Yes/No	3/4	18	58	19	185	14	99	96	30	37	M4 × 0.7	19	1.5	0.4
GBC 22s	Yes/No	7/8	22	58	19	185	17	99	96	30	37	M4 × 0.7	19	1.5	0.4
GBC 28s	Yes/No	1 1/8	28	80	25	208	20	112	108	38	44	M4 × 0.7	25.5	1.5	0.9
GBC 35s	Yes/No	1 3/8	35	89	30	251	25	136	130	48	44	M6 × 1.0	32	1.5	1.4
GBC 42s	Yes/No	1 5/8	42	110	35	281	29	151	145	55	56	M6 × 1.0	38	1.5	2.2
GBC 54s	Yes/No	2 1/8	54	131	46	305	34	167	157	74	56	M6 × 1.0	50	1.5	4.2
GBC 67s	Yes/No	2 5/8	–	149	55	343	38	188	172	84	72	M6 × 1.0	60.5	1.5	5.8
GBC 67s RP	Yes/No	2 5/8	–	131	46	305	37	167	157	74	56	M6 × 1.0	50	1.5	4.4
GBC 79s	Yes/No	3 1/8	–	169	65	416	38	230	214	86	80	M6 × 1.0	73.5	1.5	9.1
GBC 79s RP	Yes/No	3 1/8	–	131	46	305	42	167	157	74	56	M6 × 1.0	50	1.5	4.5

[1]) *Calculated value*
RP: Reduced Port

US units

Type	Access port	Connection		H	H_1	L	L_1	L_2	L_3	L_4	L_5	M	D	d	Weight
		[inch]	[mm]	[inch]	[inch]	[inch]	[inch]	[inch]	[inch]	[inch]	[inch]	[mm]	[inch]	[inch]	[lb] [1])
GBC 6s	Yes/No	1/4	6	1.7	0.5	5.5	0.3	2.9	2.9	0.7	1.2	M3 × 0.5	0.4	0.1	0.3
GBC 10s	Yes/No	3/8	10	1.7	0.5	5.5	0.4	2.9	2.9	0.7	1.2	M3 × 0.5	0.4	0.1	0.3
GBC 12s	Yes/No	1/2	12	1.7	0.5	6.3	0.4	3.3	3.3	0.7	1.2	M3 × 0.5	0.4	0.1	0.3
GBC 16s	Yes/No	5/8	16	2.0	0.6	6.3	0.5	3.4	3.3	0.9	1.2	M4 × 0.7	0.6	0.1	0.5
GBC 18s	Yes/No	3/4	18	2.3	0.7	7.3	0.6	3.9	3.8	1.2	1.5	M4 × 0.7	0.7	0.1	1.0
GBC 22s	Yes/No	7/8	22	2.3	0.7	7.3	0.7	3.9	3.8	1.2	1.5	M4 × 0.7	0.7	0.1	1.0
GBC 28s	Yes/No	1 1/8	28	3.1	1.0	8.2	0.8	4.4	4.3	1.5	1.7	M4 × 0.7	1.0	0.1	2.0
GBC 35s	Yes/No	1 3/8	35	3.5	1.2	9.9	1.0	5.4	5.1	1.9	1.7	M6 × 1.0	1.3	0.1	3.1
GBC 42s	Yes/No	1 5/8	42	4.3	1.4	11.1	1.1	5.9	5.7	2.2	2.2	M6 × 1.0	1.5	0.1	4.9
GBC 54s	Yes/No	2 1/8	54	5.2	1.8	12.0	1.3	6.6	6.2	2.9	2.2	M6 × 1.0	2.0	0.1	9.3
GBC 67s	Yes/No	2 5/8	–	5.9	2.2	13.5	1.5	7.4	6.8	3.3	2.8	M6 × 1.0	2.4	0.1	12.8
GBC 67s RP	Yes/No	2 5/8	–	5.2	1.8	12.0	1.5	6.6	6.2	2.9	2.2	M6 × 1.0	2.0	0.1	9.7
GBC 79s	Yes/No	3 1/8	–	6.7	2.6	16.0	1.5	8.7	8.0	3.4	3.1	M6 × 1.0	2.9	0.1	20.1
GBC 79s RP	Yes/No	3 1/8	–	5.2	1.8	12.0	1.7	6.6	6.2	2.9	2.2	M6 × 1.0	2.0	0.1	9.9

[1]) *Calculated value*
RP: Reduced Port

Dimension and weight-ODF / ODM

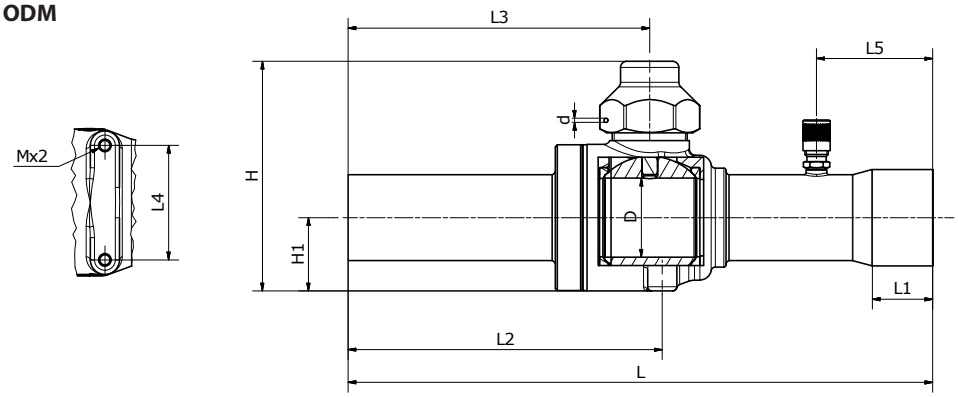

SI units

Type	Access port	Connection		H	H_1	L	L_1	L_2	L_3	L_4	L_5	M	D	d	Weight
		[inch]	[mm]	[mm]	[mm]	[mm]	[mm]	[mm]	[mm]	[mm]	[mm]	[mm]	[mm]	[mm]	[kg] [1])
GBC 22s	No	7/8	22	58	19	201	17	86	83	30	-	M4 × 0.7	19	1.5	0.4
GBC 28s	No	1 1/8	-	79	25	228	20	112	108	38	-	M4 × 0.7	25.5	1.5	0.9
GBC 28s	Yes	1 1/8	-	80	25	208	20	112	108	38	44	M4 × 0.7	25.5	1.5	0.9
GBC 35s	No	1 3/8	35	89	30	280	25	136	130	48	-	M6 × 1.0	32	1.5	1.4
GBC 35s	Yes	1 3/8	35	89	30	251	25	136	130	48	44	M6 × 1.0	32	1.5	1.4
GBC 42s	No	1 5/8	-	110	35	295	29	151	145	55	-	M6 × 1.0	38	1.5	2.2
GBC 42s	Yes	1 5/8	-	110	35	281	29	151	145	55	56	M6 × 1.0	38	1.5	2.2
GBC 54s	Yes	2 1/8	54	131	46	305	34	167	157	74	56	M6 × 1.0	50	1.5	4.2
GBC 67s	Yes	2 5/8	–	149	55	346	38	191	175	84	72	M6 × 1.0	60.5	1.5	5.8
GBC 79s	Yes/No	3 1/8	–	168	65	406	38	220	204	86	80	M6 × 1.0	73.5	1.5	9.1

[1]) Calculated value

US units

Type	Access port	Connection		H	H_1	L	L_1	L_2	L_3	L_4	L_5	M	D	d	Weight
		[inch]	[mm]	[inch]	[inch]	[inch]	[inch]	[inch]	[inch]	[inch]	[inch]	[mm]	[inch]	[inch]	[lb] [1])
GBC 22s	No	7/8	22	2.3	0.7	7.9	0.7	3.4	3.3	1.2	-	M4 × 0.7	0.7	0.1	0.9
GBC 28s	No	1 1/8	-	3.1	1.0	9.0	0.8	4.4	4.3	1.5	-	M4 × 0.7	1.0	0.1	2.0
GBC 28s	Yes	1 1/8	-	3.1	1.0	8.2	0.8	4.4	4.3	1.5	1.7	M4 × 0.7	1.0	0.1	2.0
GBC 35s	No	1 3/8	35	3.5	1.2	11.0	1.0	5.4	5.1	1.9	-	M6 × 1.0	1.3	0.1	3.1
GBC 35s	Yes	1 3/8	35	3.5	1.2	9.9	1.0	5.4	5.1	1.9	1.7	M6 × 1.0	1.3	0.1	3.1
GBC 42s	No	1 5/8	-	4.3	1.4	11.6	1.1	5.9	5.7	2.2	-	M6 × 1.0	1.5	0.1	4.9
GBC 42s	Yes	1 5/8	-	4.3	1.4	11.1	1.1	5.9	5.7	2.2	2.2	M6 × 1.0	1.5	0.1	4.9
GBC 54s	Yes	2 1/8	54	5.2	1.8	12.0	1.3	6.6	6.2	2.9	2.2	M6 × 1.0	2.0	0.1	9.3
GBC 67s	Yes	2 5/8	–	5.9	2.2	13.6	1.5	7.5	6.9	3.3	2.8	M6 × 1.0	2.4	0.1	12.8
GBC 79s	Yes/No	3 1/8	–	6.6	2.6	16.0	1.5	8.7	8.0	3.4	3.1	M6 × 1.0	2.9	0.1	20.1

[1]) Calculated value

Danfoss can accept no responsibility for possible errors in catalogues, brochures and other printed material. Danfoss reserves the right to alter its products without notice. This also applies to products already on order provided that such alterations can be made without subsequential changes being necessary in specifications already agreed.
All trademarks in this material are property of the respective companies. Danfoss and the Danfoss logotype are trademarks of Danfoss A/S. All rights reserved.