ENGINEERING
TOMORROW

Technical Information

Integrated Automotive Control (AC)
for MP1 and H1P Single Pumps

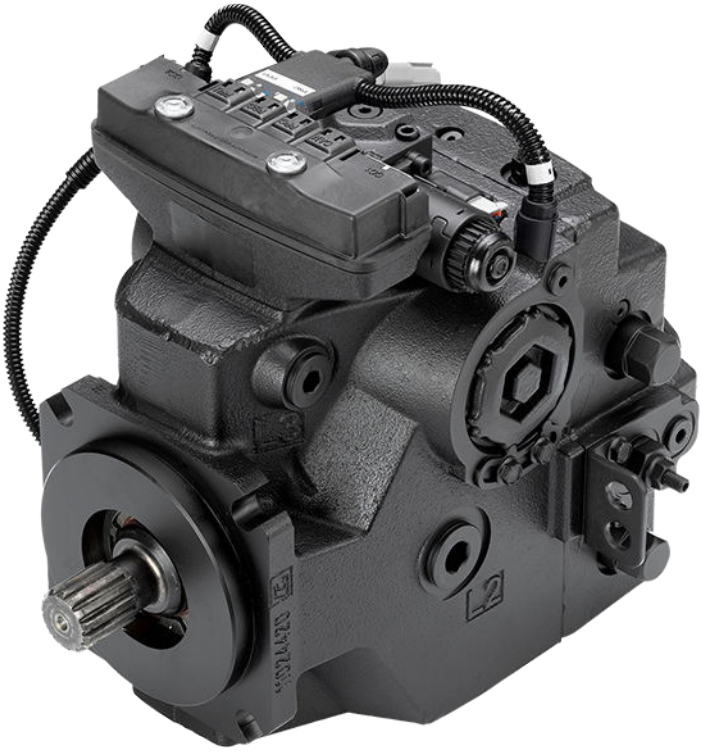

www.danfoss.com

Revision history

Table of revisions

Date	Changed	Rev
April 2020	Changed document number from 'BC00000213' and 'L1223856' to 'BC152986482596' and added new model code options	0703
August 2019	Added MP1 pump	0601
May 2017	Major update	0501
May 2014	Size 165 added	DA
February 2014	Layout in DITA CMS	CA
October 2013	Converted to Danfoss layout	BA
January 2013	All frame sizes into one document	AA

Contents

General information

Automotive controls description....5
Targeted applications....5
Hydrostatic propel methods....5
Automotive transport mode....5
Automotive ECO mode....5
Non-automotive work mode....5
Creep-automotive work mode....6
Static mode....6
Functional safety standards....6
Type A standards....6
Type B1 standards....6
Type B2 standards....7
Type C standards....7
Required hardware components....7

Functions

Function overview....8
Basic functions....9
System mode selection....9
Mode transition control....9
Drive pedal....9
Engine speed potentiometer/hand throttle....9
Inching....9
Pump/engine rpm....10
Hydromotor rpm....10
Temperature sensors....10
Pump profiling and ramping....10
Hydromotor profiling and ramping....10
Hydromotor brake pressure defeat (BPD) control....10
Maximum hydromotor torque at low vehicle speed....11
State and direction change....11
Status LED....11
Protection and safety functions....11
Start protection....11
Quick stop in automotive mode....11
Operator presence detection....11
Hydromotor overspeed protection....11
Hydraulic system overheat protection....12
Performance functions....12
ECO fuel saving mode....12
Cruise control....12
Vehicle constant speed drive (CSD)....12
Vehicle speed limitation....12
Filter for drive pedal....12
Dynamic brake light....13
Automated park brake control....13
Reverse buzzer....13
Vehicle speed dependent output....13
Load independent pump displacement control (option AC2)....13
J1939 CAN subsystem data interface....13

Engine control and protection

J1939 CAN engine interface....15
Kubota engine protocol....15
Engine anti-stall protection....15
All range engine overspeed....15
Engine over speed protection with retarder....15
Cold start protection....15

Technical specifications

Contents

Automotive Control connection diagram....16
Battery and sensor voltage supply....17
CAN communication....18
Digital inputs....18
Forward-Neutral-Reverse (FNR) switch....18
Mode switch A and B....19
Analog Inputs....20
Drive/Creep pedal....20
General requirements and recommended settings of a pedal or potentiometer....20
Engine speed potentiometer/hand throttle....20
Inch pedal....21
Cruise control....21
Pump rpm....22
Hydromotor rpm....22
PWM outputs....23
Pump control....23
Hydromotor control....23
Digital outputs....23
Hydromotor Brake Pressure Defeat (BPD) control....24
Digital output A1 and A2....25
Environmental and protection characteristics....25

Mating Connectors

Customer connectors (CC1, CC2 and CC3)....27
PPC connector....29
CAN connector....30
CAN bus adapter....30

MP1 pumps size 28-45cc model code

Automotive control parts for MP1....32

H1 pumps size 45-250cc model code

Automotive control parts for H1P....34

General information

Automotive controls description

The Integrated Automotive Control solutions are designed to support single path hydrostatic transmissions systems consisting of one pump (available sizes: MP1 28-45cc and H1P 45-250cc) and one or more hydromotor. Danfoss offers several software configurations to cover the application demands.

With the pre-installed application software and easily changeable control parameters, it is possible to tailor the vehicles driving behavior to the individual requirements of the customer. The Semi-Auto-Calibration function for the pedals and a Quick-Start Guide with implemented Hyperlinks in the Service tool will make changes and tuning more easily and effective.

Targeted applications

Automotive controls for H1 and MP1 pumps are targeted for the following applications.

- Wheel loader
- Telehandler
- Dumper
- Sweeper
- Snow blower
- Forestry machines

Hydrostatic propel methods

The application software offers different hydrostatic propel methods (defined as mode types).

Up to 4 system modes can be defined individually by parameter.

Automotive transport mode

Proportional pump and hydromotor displacement control.

The setpoint of the pump and hydromotor drive curves are given by the engine rpm. The engine rpm is commanded by a drive pedal.

- Drive pedal controls engine rpm
- Engine rpm controls vehicle speed
- Load dependent mode
- Brake/inch signal reduces vehicle speed
- Coast down when the drive pedal is released

Automotive ECO mode

The ECO fuel saving mode is designed for the Automotive Transport mode. It needs a CAN controlled engine, an electric drive pedal and a larger pump displacement.

The ECO mode function reduces the engine rpm setpoint automatically when a vehicle speed is reached. This function reduces fuel consumption and noise emission. The pump displacement will increase to keep the vehicle speed on the same level with a reduced engine rpm. The ECO mode is automatically switched off if the vehicle slows down or the driver releases the electric drive pedal.

The ECO mode is available in all Automotive Transport modes and can be enabled individually in each of the four system modes.

Non-automotive work mode

Proportional pump and hydromotor displacement control.

The setpoint of the drive curves are given by the drive pedal command independent of the engine rpm. The engine rpm is commanded by a handle throttle to fulfill the requirements of the work hydraulic.

General information

- Drive pedal controls vehicle speed
- Engine rpm is set separately with the hand throttle according to the requirements of work functions
- Load independent mode
- Brake/inch signal reduce vehicle speed
- Vehicle speed limitation by the drive pedal (no roll down the hill)
- Antistall protects the engine from overloading

Creep-automotive work mode

Mechanical controlled engines cannot command the engine rpm by a hand throttle.

The setpoint of the pump and hydromotor drive curves are given by the engine rpm, reduced by the creep potentiometer. The engine rpm is commanded by a drive pedal.

- Drive pedal controls vehicle speed
- Load dependent mode
- Creep potentiometer reduces the vehicle speed
- Brake/inch signal reduces vehicle speed

Static mode

The engine rpm is commanded by a hand throttle to fulfill the requirements of the work functions.

The vehicle does not drive in this mode.

Functional safety standards

The AC controller fulfills the safety requirements according to the machine directive (2006/EC).

The design of this general purpose safety controller includes features required for sophisticated machine control strategies. It is equally suited for use in safety related or general machine control applications. The controllers support smart digital inputs. Device outputs can be individually controlled by the watchdog processor.

The Safety Manual of the propel controller solutions is intended to guide the system integrator concerning functional safety. The document describes a possible implementation of the needed safety functions and is available on request. Please contact your local Danfoss representative to request the Safety Manual.

Type A standards

This standard covers all general safety requirements that apply to all types of machines.

- IEC 61508 Functional safety of electrical/electronic/programmable electronic safety-related systems

Type B1 standards

This standard covers safety and ergonomic design of machinery.

- ISO 15998 Controller for Earth moving machinery
- EN ISO 13849-1:2015 Safety of machinery; Safety-related parts of control systems Part 1 and 2
- ISO 25119 Agriculture machinery (formerly EN 16590)

General information

Type B2 standards

This standard covers safety components and protective devices. For example: two-hand controls; interlocking devices; pressure-sensitive devices; guards).

Type C standards

This standard covers detailed safety requirements for a particular machine or group of machines.

- ISO 20474-2017 (formerly DIN/EN 474) Earth moving machinery
- EN 1459-1:2017 Rough terrain trucks; Safety requirements and verification Part 1: Variable reach trucks
- EN 4254:2013 Agriculture machinery; Safety Part 1: General requirements
- EU 167/2013 Agricultural and Forestry vehicles (tractor directive)
  - EU 1322/2014
  - EU 68/2015
  - EU 96/2015
  - EU 208/2015
  - EU 1788/2016

Required hardware components

Engine

Mechanical or CAN controlled engines. CAN J1939 and proprietary Kubota protocol are supported.

Hydrostatic pumps

Load dependent pumps (NFPE) with embedded AC controller.

- MP1 series: size 28, 32, 38 and 45cc
- H1 series: size 45, 53, 60, 69, 78, 89, 100, 115, 130, 147, 165, 210 and 250cc
- Speed sensor in the pump only for mechanically controlled engines
- No pressure sensors required

Hydraulic motors

Orbital hydraulic motors (fixed)

- OMS, OMT and OMV series: size 80-800cc
- TMK, TMT and TMV series: size 160-800cc

Axial piston hydraulic motors with zero degree capability

- Series 40 (fixed): size 25, 35, and 44cc
- L/K series (variable, 2-position): size 25, 35, 38 and 45cc
- H1B series (variable with pressure control PCOR): size 60, 80, 110, 160, 210 and 250cc
- H1B series (variable with proportional control): size 60, 80, 110, 160, 210 and 250cc

Functions

Function overview

The available functions for the individual software solution can be found in the table below. A more detailed description of the individual functions can be found on the following pages.

Basic functions

Function	Option code H1P / MP1						
	F1F (AF1F)	F2J (AF2J)	F1E (AF1E)	F2E (AF2E)	F3J (AF3J)	F4J (AF4J)	F6L
Automotive Transport Mode	x	x	x	x	x	x	x
Non-Automotive Work Mode	x	x	x	x	x	x	x
Creep-Automotive Work Mode	x	x	x	x	x	x	
4 Selectable System Modes	x	x	x	x	x	x	x
Independent Profiling & Ramping for Pump and Hydromotor	x	x	x	x	x	x	x
Mode Transition Control	x	x	x	x	x	x	x
Drive Pedal with Filter Function	x	x	x	x	x	x	x
Brake/Inch Pedal	x	x	x	x	x	x	x
Engine Speed Potentiometer/Hand Throttle	x	x	x	x	x	x	x
Engine & Hydromotor rpm sensor	x	x	x	x	x	x	x
Creep Mode Potentiometer	x	x	x	x	x	x	
Pressure Controlled (PCOR) Hydromotor Control	x	x	x	x	x	x	
Proportional Hydromotor Control							x
Hydromotor Load Limiter							x
Max. Hydromotor torque at low vehicle speed	x	x	x	x	x	x	x
Status Information by LED blink code	x	x	x	x	x	x	x

Protection and safety functions

Start Protection	x	x	x	x	x	x	x
Quick Stop in Automotive Mode	x	x	x	x	x	x	x
Operator Presence Detection	x	x	x	x	x	x	x
Hydraulic motor Over Speed Protection	x	x	x	x	x	x	x
Hydraulic Overheat protection	x	x	x	x	x	x	x

Performance functions

Automotive ECO Mode		x	x	x	x	x	x
Cruise Control		x			x	x	
Constant Speed Drive (CSD)	x	x	x	x	x	x	x
Vehicle speed Limitation	x	x	x	x	x	x	x
Dynamic Brake Light Control by Deceleration	x	x	x	x	x	x	x
Automatic Park Brake Control	x	x	x	x	x	x	x
Reverse buzzer	x	x	x	x	x	x	x
Vehicle speed dependent Output (load Stabilizer)	x	x	x	x	x	x	x

Functions

Performance functions (continued)

CAN User Interface (e.g. Error messages, Inputs…)	x	x	x	x	x	x	x
Load Independent Pump Displacement Control (Option AC2)		x				x	

Engine control and protection

Mechanical controlled Engines	x	x	x	x	x	x	
CAN J1939 Engine rpm control	x	x	x	x	x	x	x
Kubota CAN Engine rpm control		x	x				
Engine Antistall protection	x	x	x	x	x	x	x

Engine control and protection (continued)Pi

All range engine over speed protection	x	x	x	x	x	x	x
Engine Over Speed Protection with Retarder	x	x	x	x	x	x	x
Engine cold start protection	x	x	x	x	x	x	x

Basic functions

System mode selection

The mode switch defines which of the 4 system modes should be applied.

The mode switch has three digital inputs supplied with battery voltage or received via CAN message. For diagnostic purpose one mode switch is redundant.

The mode change conditions can be defined by parameter.

Mode transition control

This function allows configuration of an application specific System Mode transition.

The System Mode change condition can be dependent on multiple factors including actual FNR Direction, Drive Pedal Input, and Vehicle Speed.

Drive pedal

The drive pedal is used as the vehicle speed request.

Depending on the propel mode it can be the engine setpoint (automotive mode) or the pump and hydromotor command (work mode).

The drive pedal has two redundant analogue signals, supplied with 5V sensor voltage or can received via CAN (EEC2) standard message.

Engine speed potentiometer/hand throttle

The engine speed potentiometer is used as the engine setpoint in work mode.

The engine speed potentiometer has two redundant analogue signals, supplied with 5V sensor voltage or can received via CAN (EEC2) standard message.

Inching

The inch function allows the operator to reduce the vehicle speed, stop the machine or keep the vehicle speed low while rising the engine rpm to meet the flow demand of the work functions.

An increasing inch pedal signal will reduce the pump displacement, thus reducing vehicle speed.

Functions

There can be a combination brake/inch of the service brake with an additional sensor for an inch signal or a separate inch pedal.

The inch pedal has two redundant analogue signals, supplied with 5V sensor voltage or can received via CAN (EBC1) standard message.

Pump/engine rpm

The pre-installed pump rpm sensor is connected to calculate the pump/engine rpm.

The calculated engine rpm is the setpoint for the automotive drive curve. Optional the engine rpm signal can received via CAN EEC1 message from the engine controller. In this case, a pump rpm sensor is not required.

Hydromotor rpm

The hydromotor rpm is measured via a PPU (pulse pickup unit) in the hydromotor. With help of the gear factor and wheel diameter a vehicle speed is calculated.

The hydromotor rpm is detected by a frequency input with signal level detection. It is supplied with the 5V sensor voltage.

The actual vehicle speed is send out via CAN CCVS message.

Temperature sensors

The temperature sensor integrated in the controller will measure the hydraulic oil temperature.

These functions are:

- Protection of the complete hydrostatic system by reducing the pump flow (by pump command) at extreme high temperatures according to user defined temperature curve.
- Protection of the complete hydrostatic system by reducing the commanded engine rpm at low temperatures according to a user defined temperature value. When the system has warmed up, the engine speed limitation is no longer active.

The actual temperature is sent out via CAN TRF1 message.

Pump profiling and ramping

The pump solenoids are supplied by two PWM (pulse width modulation) output signals, independently configured for the forward and reverse driving direction in each of the four system modes.

For each of the four system modes two independent profile curves for forward & reverse are available.

Hydromotor profiling and ramping

Proportional and 2-Position hydromotors can be controlled directly by a PWM output signal.

The hydromotor command can be defined by a constant value or a profile curve output, individually for each of the four system modes and driving direction.

Hydromotor brake pressure defeat (BPD) control

The hydromotor BPD control is used in combination with a pressure controlled (PCOR) hydromotor control.

This function prevents the activation of the internal hydromotor control pressure compensator (PCOR) during deceleration events. The hydromotor BPD control is activated automatically.

Functions

Maximum hydromotor torque at low vehicle speed

This function will command the hydromotor to max displacement during low vehicle speed to provide the maximum available torque.

If the defined vehicle speed is reached, the hydromotor will follow the original drive curve. A hydromotor or vehicle speed sensor is required to detect the actual vehicle speed.

State and direction change

A driving direction change is always handled in a safe way.

The change request by the FNR switch will initiate the deceleration of the vehicle. The change of the driving direction is only started, if the actual vehicle speed is below a threshold value.

Status LED

In case of an Error, the red status LED on the controller shows a blink code.

The green LED is continuously on if the controller is supplied with battery power.

Protection and safety functions

Start protection

The safety controlled vehicle start protection prevents commanded, unexpected or otherwise dangerous vehicle movement after initial power on the engine.

The start protection is monitoring the following signals:

- Engine rpm
- Battery voltage
- Error status
- Inch calibration
- FNR in neutral

Quick stop in automotive mode

When operating the vehicle in automotive transport mode, the controller will use the engine rpm as the setpoint. The electric drive pedal position (out of the deadband) is used as an enable signal.

The driver must press the drive pedal and the engine rpm must rise to move the vehicle. If the driver releases the drive pedal fully (drive pedal return into the deadband), the pump current will decrease with an adjustable ramp to a defined value. The vehicle will decelerate much faster compared to the normal behavior.

Operator presence detection

Driving the vehicle is only allowed if the operator is seated on the driver seat. A programmable time delay will trigger vehicle shut down if the driver leaves the seat for a longer period of time.

Before a pre-warning signal is shown, there is a possibility to override the seat switch if the driver is pressing the drive pedal.

Hydromotor overspeed protection

The hydromotor overspeed protection prevents the hydromotor from over speeding by decreasing pump displacement or increasing hydromotor displacement.

The hydromotor rpm speed limit, is user defined and valid in all four system modes when activated.

Functions

Hydraulic system overheat protection

The temperature sensor in controller will measure the hydraulic oil temperature.

The function protects the complete hydrostatic system by reducing the pump flow (by pump command) at extreme high temperatures according to user defined temperature curve.

Performance functions

ECO fuel saving mode

The ECO fuel saving mode is designed for the automotive transport mode. It needs a CAN controlled engine (TSC1 & EEC2), an electric drive pedal and a larger pump displacement.

The ECO mode function reduces the engine rpm setpoint (TSC1) automatically when the defined vehicle speed is reached. This will reduce the fuel consumption and noise emission. The pump displacement will be increased to keep the vehicle speed on the same level with a reduced engine rpm. The ECO mode is automatically switched off if the vehicle slows down or the driver releases the electric drive pedal.

The ECO mode is available in all automotive transport modes and can enabled individually in each of the four system modes.

Cruise control

The cruise control will keep the vehicle speed constant during driving.

The driver can release the drive pedal if cruise control is enabled. The software will keep the vehicle speed constant by adjusting the setpoint.

An actuation of the drive pedal above the captured value (higher wins) will accelerate the vehicle.

If the drive pedal is released again, the vehicle speed will return to the captured value.

If cruise control is enabled, the driver can increase or decrease the vehicle speed by pressing a button. The speed steps and trigger time can be set by parameter.

Cruise control is working only in forward driving direction, all cruise states are send out via proprietary CAN message.

Vehicle constant speed drive (CSD)

The CSD function will allow driving with a constant vehicle speed, independent of the engine rpm.

If the actual vehicle speed differs from the commanded speed, the CSD function will adjust the pump and hydromotor command to compensate the speed difference. The speed setpoint usually comes from an electric drive pedal. For the feedback a hydromotor or vehicle speed sensor is required.

Vehicle speed limitation

The vehicle speed limitation prevents the machine from over-speeding.

It can configured separately for each system mode and driving direction. The vehicle speed is calculated from the hydromotor rpm, the gear factor and the wheel diameter.

Filter for drive pedal

When driving over a field or other rough terrain, the vehicle is shaking and the driver has no chance to keep the electric drive pedal constant in one position, the filter function for the drive pedal is able to mitigate this short movement.

The filter can configure individually in each system mode.

Functions

Dynamic brake light

The digital brake light output is switched on if the inch/brake pedal command exceeds a user defined value or the calculated deceleration is too high (measured by the hydromotor rpm sensor).

This function applies the brake light if the vehicle decelerates by the hydrostatic system. There will be an on/off delay to avoid flickering of the brake lights.

Automated park brake control

The park brake can applied automatically by CAN message RCI (PGN FF30 - Signal Brake Remote Request) or the following:

- Software machine state in STOP mode
- Actual pump valve current below user defined value
- Actual inch pedal command exceeds user defined value
- Actual vehicle speed is lower than a user defined value

Delay times for park brake applied and released are individually configurable.

The park brake logic support the “negative brakes” and is connected in closed loop, that means + and – are connected to the controller.

Brake applied = output is switched off

Brake released = output is switched on

Reverse buzzer

The reverse buzzer is switched on if the FNR is set to reverse.

Vehicle speed dependent output

The vehicle speed dependent output signal toggles a digital output when the actual vehicle speed exceeds a user defined value. It can be used as a e.g. speed dependent load stabilizer.

Load independent pump displacement control (option AC2)

The load independent pump displacement control maintains commanded swash plate position independent of load (Non-Automotive, similar to EDC behavior) using electronic feedback from the pump swash plate angle sensor.

The function can be enabled individually for each of the four system modes. Two independent profile curves for forward & reverse are available.

J1939 CAN subsystem data interface

The AC control can exchange information with the vehicle system via the CAN bus.

The following standard messages are supported:

- TSC1 (torque/speed control)
- EEC1 (pump/engine rpm)
- EEC2 (drive pedal)
- EBC1 (inch pedal)
- ETC5 (FNR)
- VH (vehicle hours)
- RCI (brake remote control)
- OPS (operator presence)
- CC VS (vehicle speed)
- VEP1 (battery voltage)
- TRF1 (oil temperature)

Functions

Additional Danfoss Power Solutions specific (proprietary) messages are available to share information about mode switches, hydromotor rpm, transmission state and error messages. All messages can be individually activated and designated for usage.

Engine control and protection

J1939 CAN engine interface

The AC controller can exchange information with the engine via the CAN J1939 protocol (TSC1 message) CAN messages can be individually activated and designated for usage.

The following functions and standard messages are provided:

- Engine speed control
- Engine anti-stall protection
- All range engine overspeed protection
- Engine overspeed protection with retarder function
- Cold start protection

Kubota engine protocol

The AC controller supports the properitary Kubota Engine protocol. It is available on request. Please contact your local Danfoss representative.

Engine anti-stall protection

The engine anti-stall protection prevents the engine from being stalled due to overload.

The commanded engine rpm (TSC1) is compared with the measured engine rpm. If the engine is drooped, the engine anti-stall function will reduce the hydrostatic propel command to reduce the engine load and the vehicle speed.

The engine anti-stall function can be individually enabled for each system mode and is configurable. It works only with CAN controlled engines.

All range engine overspeed

The engine rpm is monitored in all driving situations, but only if the vehicle is moving. Therefore a speed sensor in the hydraulic motor is mandatory.

When the system detects an engine overspeed situation, the pump will swivel out. That will limit the deceleration of the vehicle. The driver must use the service brake to reduce the vehicle speed.

The engine rpm range for the overspeed detection can be defined by parameter. Time ramps for activation and de-activation of the function are available.

Engine over speed protection with retarder

The engine rpm dependent retarder control toggles a digital output when the actual engine rpm exceeds a user defined level. The retarder can activate a valve of the work hydraulic to give load to engine and prevent an over speeding.

Cold start protection

An integrated temperature sensor will measure the system temperature.

If the temperature is lower than a user defined level, the engine rpm command (TSC1) is limited until the system is warmed up to protect the engine and the hydraulic system.

Technical specifications

Automotive Control connection diagram

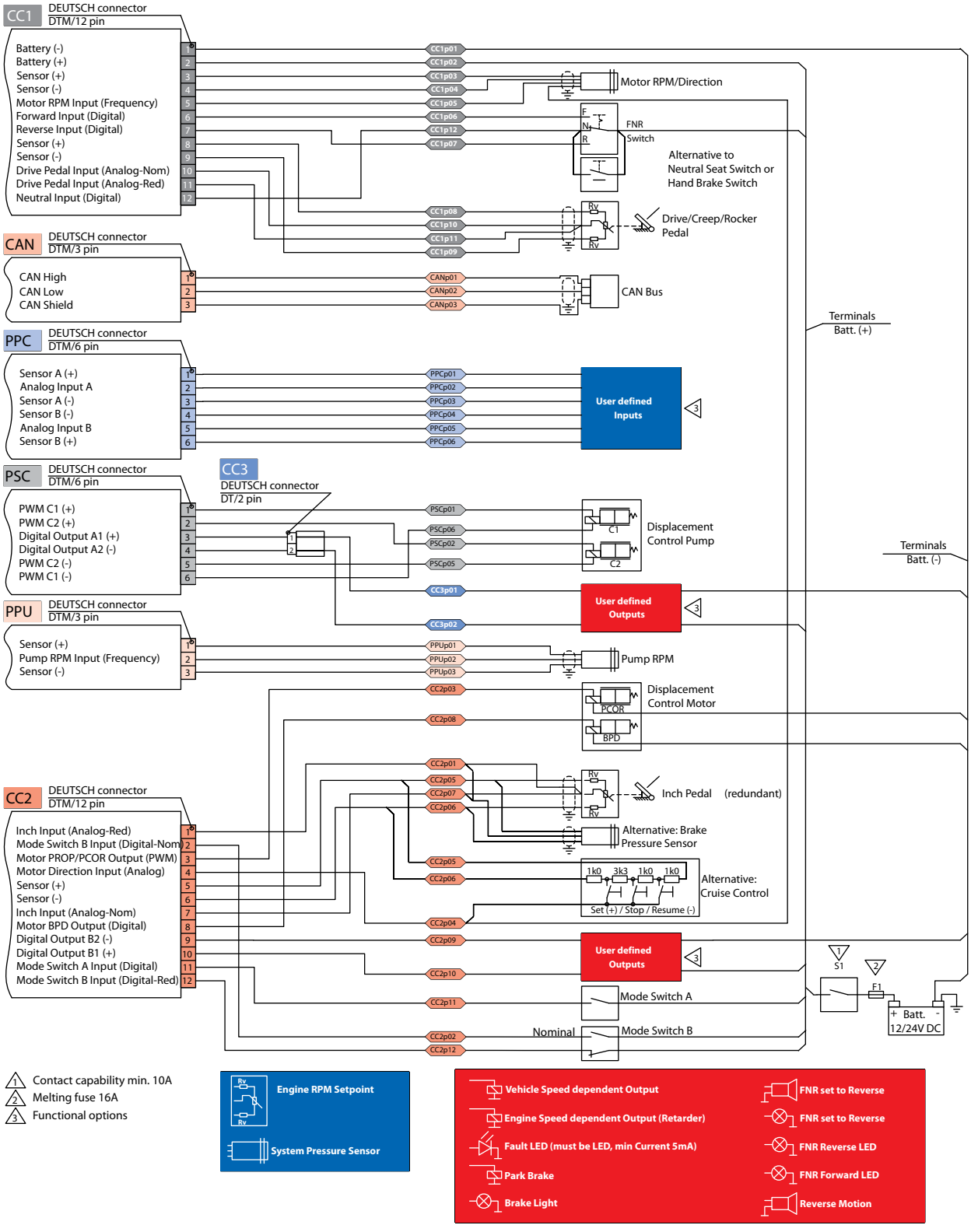

Technical specifications

Battery and sensor voltage supply

The AC can be supplied with 12 or 24 V_{DC} depending on the control type.

CC1: 01 Battery (-)	Power supply input from battery
CC1: 02 Battery (+)	Power supply input from battery
CC1:03; CC1:08; PPC:01; PPC:06; PPU:1; CC2:05	Sensor supply voltage (+5 V)
CC1:04; CC1:09; PPC:03; PPC: 04; PPU:3; CC2:06	Sensor supply voltage (-)

All (-) pins are internally connected.

The 5 V sensor supply is internally generated. The sensor supply is protected against overload and reverse polarity connection.

For more information about a pinout description, see *Customer connectors (CC1, CC2 and CC3)*.

Supply characteristics

Parameter	Minimum	Maximum
Battery supply current	—	12 A
Recommended fuse size	—	16 A
Supply voltage range: rated 12 V	9 V_{DC}	16 V_{DC}
Supply voltage range: rated 12 V	18 V_{DC}	32 V_{DC}
Permanent supply voltage range	9 V_{DC}	36 V_{DC}
Rated 12 V range	9 V_{DC}	16 V_{DC}
Rated 24 V range	18 V_{DC}	32 V_{DC}
Permanent reverse voltage protection	—	-36 V_{DC}
Sensor supply voltage range (internal)	4.825 V_{DC}	5.075 V_{DC}
Sensor supply current	—	1 A*

* Maximum 1 A for all sensors together.

Technical specifications

CAN communication

The AC Control can exchange information with the vehicle system via CAN bus. CAN communication baudrate is 250 kBaud. The physical (hardware) layer operates using the CAN 2.0B specification according to ISO 11898-2, high speed. The CAN interface is even used for application software downloads and parameter settings.

CAN:01 CAN High	Communication connection for CAN – High line
CAN:02 CAN Low	Communication connection for CAN – Low line
CAN:03 CAN Shield	Communication connection for CAN – Shield

There is no internal termination resistor installed.

Digital inputs

The digital inputs switched to battery supplied 12 or 24 V DC.

Parameter	Minimum	Maximum
Rising voltage threshold[1]	-	7.0 V DC
Falling voltage threshold[2]	1.66 V DC	-
Input impedance	13.4 kΩ	13.8 kΩ

[1] A digital input is guaranteed to be read as high if the voltage is > 7 V

[2] A digital input is guaranteed to be read as low if the voltage is below 1.66 V DC

For more information about pinning description, see *Customer connectors (CC1, CC2 and CC3)* on page 27.

Forward-Neutral-Reverse (FNR) switch

The FNR switch selects the driving direction, switched to battery supplied at 12 or 24 V DC. Different configurations can be used. Please consider the required performance level when choosing an option.

- Held signal (switch)
- Monetary signal (push button)
- 2 pin FNR
- 3 pin FNR
- 2 pin FNR with seat switch or hand brake option

CC1:06 FNR Forward Input	Digital input for forward driving direction
CC1:07 FNR Reverse Input	Digital input for reverse driving direction
CC1:12 FNR Neutral Input	Digital input for neutral driving direction

FNR

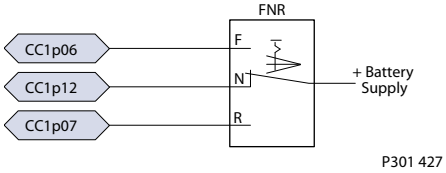

Technical specifications

Mode switch A and B

The mode switches are switched to battery supply (12/24 V_{DC}) and select the four possible system modes according to the table below:

Modes and selection

Mode Switch		System mode			
		Mode 1	Mode 2	Mode 3	Mode 4
A		Low	Low	High	High
B	Nominal	Low	High	Low	High
	Redundant	High	Low	High	Low

CC2:11 Mode Switch A Input	Digital input for mode switch A
CC2:02 Mode Switch B Input (Nominal)	Digital input for mode switch B (nominal)
CC2:12 Mode switch B Input (Redundant)	Digital input for mode switch B (redundant)

Mode switch A

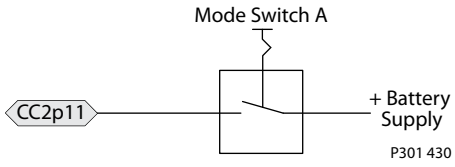

Mode switch B

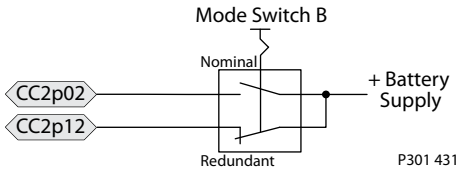

Technical specifications

Analog Inputs

The analog inputs are supplied with the internal sensor voltage by the AC control.

Analog inputs

Parameter	Minimum	Maximum
Input voltage range	0.08 V_{DC}	5.26 V_{DC}
Resolution (4096 steps)	—	12 Bit
Input impedance	230 kΩ	236 kΩ

Drive/Creep pedal

The drive pedal is used as the vehicle speed request. Depending on the propel mode it can be the engine setpoint (Automotive mode) or the pump & hydromotor command (work mode).

The drive pedal signal can be configured and sent by the AC as CAN Engine Speed Command for the J1939-CAN message TSC1 or proprietary Kubota Protocol.

CC1:08 Sensor (+)	Sensor supply (+)
CC1:09 Sensor (-)	Sensor supply (-) – direct GROUND connection
CC1:10 Drive Pedal Input (Nominal)	Nominal analog input for creep/drive pedal as the command signal
CC1:11 Drive Pedal Input (Redundant)	Redundant analog input for drive/creep pedal for diagnostic purpose

General requirements and recommended settings of a pedal or potentiometer

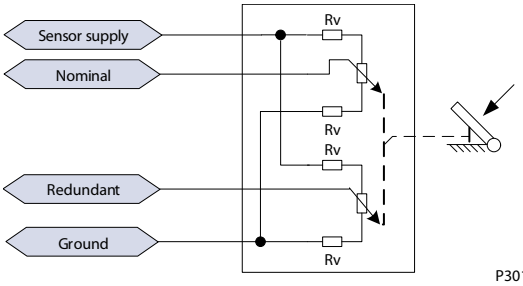

- The pedal must be supplied with AC sensor supply voltage and must not exceed the maximum output current (overload).
- This pedal must produce two electrically independent output signals that are in direct correlation with each other. The difference of the two input signals should be 500 mV. The redundant tolerance should be set to +/- 200 mV.
- The first output signal is used as the source of pedal position signal. It must rise when the pedal is pressed. The second output signal is used for diagnostic purposes.
- The voltage range of the output signals should not be lower than 5% and not higher than 95% of sensor voltage. Upper and lower voltage limits to pedal supply are requested for wire-fault detection.

Engine speed potentiometer/hand throttle

The engine speed potentiometer is used as the engine setpoint in work mode.

The engine speed potentiometer has two redundant analogue signals, supplied with 5V sensor voltage.

PPC:01 Sensor A(+)	Sensor supply (+5V)

Technical specifications

PPC:06 Sensor B(+)	Sensor supply (+5V)
PPC:03 Sensor A(-)	Sensor supply (-) – direct GROUND connection
PPC:04 Sensor B(-)	Sensor supply (-) – direct GROUND connection
PPC:02 Engine speed potentiometer (Nominal)	Nominal analog input for Engine Speed Potentiometer as the command signal
PPC:05 Engine Speed Potentiometer (Redundant)	Redundant analog input for Engine Speed Potentiometer for diagnostic purposes

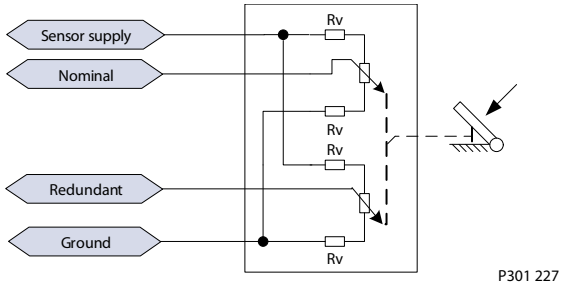

Inch pedal

The inch function allows the operator to reduce the vehicle speed, stop the machine or keep the vehicle speed low while raising the engine rpm to meet the flow demand of the work functions.

An increasing inch pedal signal will reduce the pump displacement, thus reducing vehicle speed. There can be a combination brake/inch of the service brake with an additional sensor for an inch signal or a separate Inch pedal, supplied with 5V sensor voltage.

CC2:05 Sensor (+)	Sensor supply (+)
CC2:06 Sensor (-)	Sensor supply (-) – direct GROUND connection
CC2:07 Inch Pedal Input (Nominal)	Nominal analog input for the inch pedal as the command signal
CC2:01 Inch Pedal Input (Redundant)	Redundant analog input for inch pedal for diagnostic purposes

Example of a brake/Inch pedal with pressure sensor

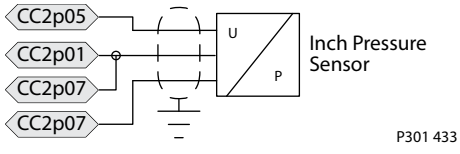

Cruise control

The cruise control will keep the vehicle speed constant during driving. The driver has three buttons “Set” “Stop” and “Resume.” The resistor matrix is supplied with 5V sensor voltage.

CC2:05 Sensor (+)	Sensor supply (+5V)
CC2:06 Sensor (-)	Sensor supply (-) – direct GROUND connection
CC2:04 Cruise Input	Analog input for cruise control buttons

Technical specifications

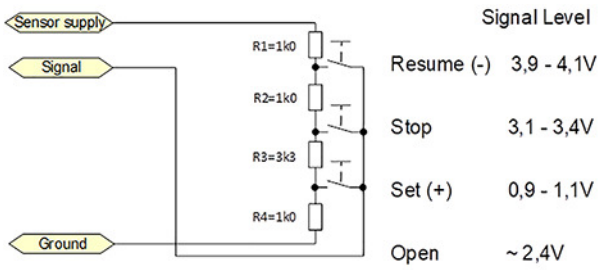

Analog input

Parameter	Minimum	Maximum
Input voltage range	0.08 V_{DC}	5.26 V_{DC}
Resolution (4096 steps)	—	12 Bit
Input impedance *	—	—

* 15 kΩ to sensor supply, 14.1 kΩ to Ground

Pump rpm

The engine rpm is measured via a PPU (pulse pickup unit) in the pump. Optionally, the signal can be received via CAN EEC1 message.

The pump rpm is detected by a frequency input. It is supplied with the 5V sensor voltage. It is only useable with the Danfoss PPU sensor **BC152886482203**. When using the sensor, the wiring is part of the cable harness on the pump.

PPU:01 Sensor (+)	Sensor supply (+5V)
PPU:03 Sensor (-)	Sensor supply (-) – direct GROUND connection
PPU:02 Pump rpm	Frequency input for pump rpm sensor

Hydromotor rpm

The hydromotor rpm is measured via a PPU in the hydromotor. With help of the gear factor and wheel diameter a vehicle speed is calculated.

The hydromotor rpm is detected by a frequency input with signal level detection. It is supplied with the 5V sensor voltage.

CC1:03 Sensor (+)	Sensor supply (+5V)
CC1:04 Sensor (-)	Sensor supply (-) – direct GROUND connection
CC1:05 Hydromotor rpm	Frequency input for hydromotor rpm sensor

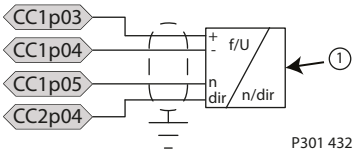

Frequency input (hydromotor rpm)

Parameter	Minimum	Maximum
Rising voltage threshold (middle range)[1)]	2.0 V_{DC}	3.5 V_{DC}
Falling voltage threshold (middle range)[2)]	0.74 V_{DC}	—

Technical specifications

Frequency input (hydromotor rpm) (continued)

Parameter	Minimum	Maximum
Input impedance[3)]	7.0 kΩ	7.21 kΩ
Frequency range (in steps of 1 Hz)	0 Hz	10 000 Hz

[1)] The frequency input is guaranteed to be read as high if the voltage is > 3.5 V

[2)] The frequency input is guaranteed to be read as low if the voltage is < 0.74 V.

[3)] 15 kΩ to sensor supply, 13.5 kΩ to GND

PWM outputs

The PWM outputs switch to battery supply (12/24 V).

PWM output

Parameter	Minimum	Maximum
Proportional current	0 A	3.0 A
Output voltage	—	Supply
PWM frequency	33 Hz	200 Hz

Pump control

The pump solenoids are supplied by two PWM output signals. The low side (-) is connected via a digital output, switching to ground. The wiring is part of the cable harness on the pump.

PSC:01: Pump C2 driver (+) Proportional output (+) for the pump solenoid C1; PWM signal from battery supply (12/24 V)

PSC:06 Pump C1 driver (-) Low side switch (-) for the pump solenoid C1; switch to GND

PSC:02 Pump C2 driver (+) Proportional output (+) for the pump solenoid C2; PWM signal from battery supply (12/24 V)

PSC:05 Pump C2 driver (-) Low side switch (-) for the pump solenoid C2; switch to GND

Hydromotor control

The hydromotor solenoid is supplied by a PWM output signal. Proportional and 2-Position hydromotors can be controlled directly. The low side (-) is connected directly to ground.

CC2:02 Hydromotor driver (+) Proportional output (+) for the hydromotor solenoid; PWM signal from battery supply (12/24 V)

Digital outputs

The digital outputs can switch to battery supply (12/24 V) or to ground.

Parameter	Minimum	Maximum
Output current	0 A	3 A
Output voltage CC3:01 (A1); CC2:08 (BPD); CC2:10 (B1)	-	Battery supply
Output voltage CC3:02 (A2); CC2:09 (B2)	Ground	-

Technical specifications

Hydromotor Brake Pressure Defeat (BPD) control

The hydromotor BPD control is used in combination with a pressure controlled (PCOR) hydromotor control.

The hydromotor BPD control prevents the activation of the internal hydromotor control pressure compensator (PCOR) during deceleration events.

CCC2:08 Hydromotor BPD Driver	Digital output for the brake pressure defeat (BPD) valve. Switched to battery (+) supply (12/24 V).

Technical specifications

Digital output A1 and A2

The digital outputs can be used as single outputs (open loop - switch to battery supply or GND) or in closed loop.

The outputs can be configured individually to operate as:

- Brake light control
- Status signal (error LED)
- Reverse motion signal
- Engine speed dependent retarder control
- FNR in reverse signal
- Vehicle speed dependent signal
- Cruise control on
- Park brake control

CC2:09 Digital output B2 (-)	Digital output - switched to GND (-)
CC2:10 Digital output B1 (+)	Digital output - switched to battery (+) supply
CC3:01 A1 (+)	Digital output – switched to battery (+) supply
CC3:02 A2 (-)	Digital output – switched to GND (-)

Open loop (left) and closed loop (right)

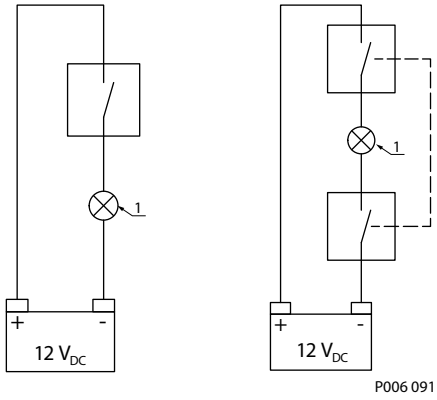

Depending on the required performance level, safety-relevant functions (like brake light control, park brake control, etc.) must be connected in closed loop.

The current feedback A2 (-) and B2 (-) are actively monitored; a detected error will result in SAFE state.

Environmental and protection characteristics

Parameter	Standard description
Short circuit	All inputs and outputs will withstand continuous short circuit to all other leads. When the short circuit is removed the unit returns to normal function.
EMC-Immunity (EMI)	EN 61000-6-2 (100 V/m) EMC generic standard for immunity, industrial environment - incl. 1 kHz w/AM 80%
EMC-Emission (RFI)	EN 61000-6-3 EMC generic standard for emission, residential and industrial environments EN 12895 for industrial trucks
ESD	EN 61000-4-2 Electrostatic discharge immunity test Level 4 Direct contact discharge to connector pins

Technical specifications

Parameter	Standard description
Automotive transients	ISO 7637 / 1-3
Temp/Volt/Humidity	IEC 60068-2-38 (-40 to 104° C)
Cold test	IEC 60068-2-1 AD
Dry heat	IEC 60068-2-2 BD
Ice water shock	ISO 16750-4
Salt mist	IEC 60068-2-11 test Ka
IP67 and IPX9K*	IEC 60529 and DIN 40050 part 9 (valid for control only)

* with installed plug

Mating Connectors

Customer connectors (CC1, CC2 and CC3)

CC1 connector

CC1 connector DEUTSCH DTM, 12-pin

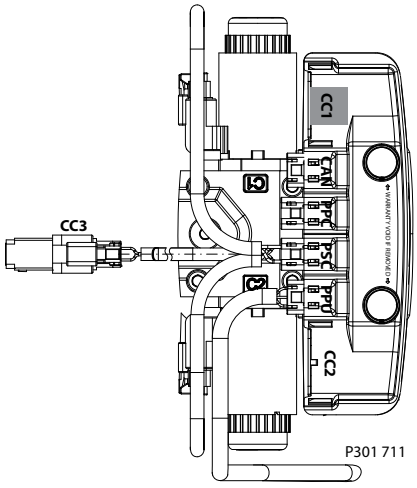

1. Battery (-)
2. Battery (+)
3. Sensor (+)
4. Sensor (-)
5. Hydromotor rpm input (frequency)
6. Forward input (digital)
7. Reverse input (digital)
8. Sensor (+)
9. Sensor (-)
10. Drive pedal input (analog-nominal)
11. Drive pedal input (analog-redundant)
12. Neutral input (digital)

Mating Connectors

CC2 connector

CC2 connector DEUTSCH DTM, 12-pin

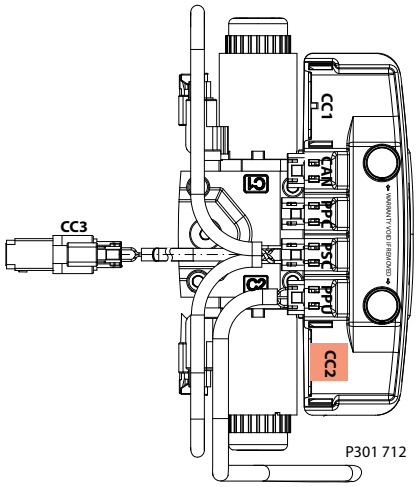

1. Inch input (analog redundant)
2. Mode switch B input (digital nominal)
3. Hydromotor PROP/PCOR output (PWM)
4. Cruise control input (analog)
5. Sensor (+)
6. Sensor (–)
7. Inch input (analog nominal)
8. Hydromotor BPD output (digital)
9. Digital output B2 (–)
10. Digital output B1 (+)
11. Mode switch A input (digital)
12. Mode switch B input (digital redundant)

There are 2 available kits, differentiated by customer wire diameter, containing both CC1 and CC2 mating connectors.

CC1 and CC2 connectors kits information

Kit Name	Lead wire diameter	Material No.
Assembly bag with 2 DEUTSCH connectors DTM06 12-SA and DTM06 12-SB Black/Grey and gold plated pins	0.5-1.0 mm^2 (16-20 AWG)	**10102023**
	0.2-0.5 mm^2 (20-24 AWG) {recommended}	**10100945**

Mating Connectors

CC3 connector

CC3 connector DEUTSCH DT, 2-pin

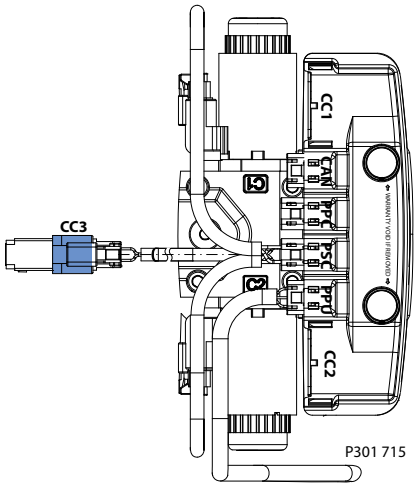

1. Digital output A1 (+)
2. Digital output A2 (–)

CC3 connector DEUTSCH kit information

Kit Name	Lead wire diameter	Material No.
Assembly bag with 1 DEUTSCH connector DT04 2P Grey and gold plated pins	0.5-2.0 mm^2 (14-20 AWG)	**11070531**

PPC connector

PPC connector DEUTSCH DTM, 6-pin

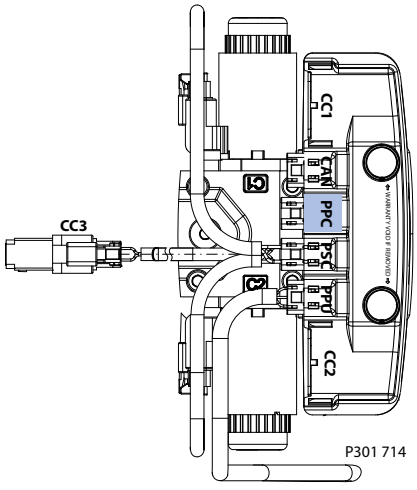

1. Sensor A (+)
2. Analog input A
3. Sensor A (-)

Mating Connectors

4. Sensor B (-)
5. Analog input B
6. Sensor B (+)

PPC connector DEUTSCH DTM kits information

Kit Name	Lead wire diameter	Material No.
Assembly bag with 1 DEUTSCH connector DT06 6P Grey	0.5-1.0 mm² (16-20 AWG)	**11033863**
Assembly bag with 1 DEUTSCH connector DT06 6P Black	0.2-0.5 mm² (20-24 AWG) {recommended}	**11033865**

CAN connector

CAN connector DEUTSCH DTM, 3-pin

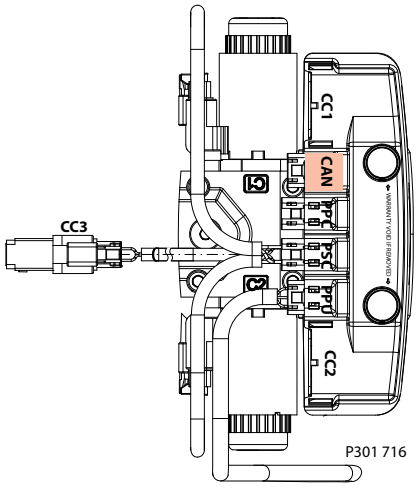

1. CAN – High line
2. CAN – Low line
3. CAN – Shield

CAN bus adapter

AC controller / CG 150 CAN USB Gateway diagram

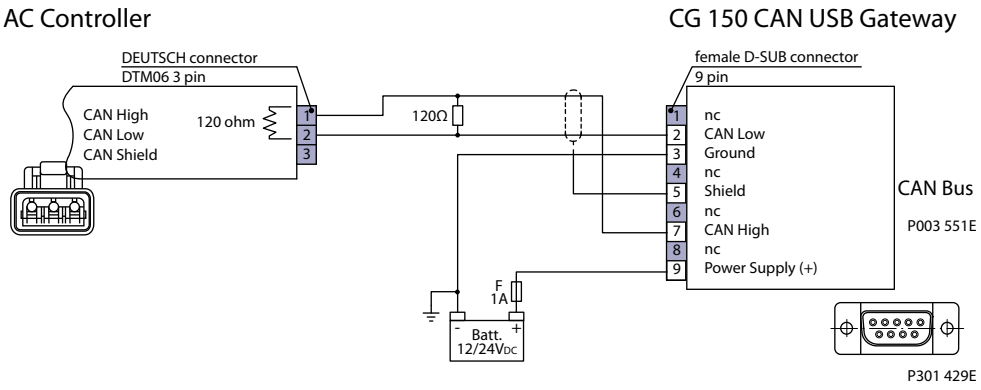

Mating Connectors

The additional adapter cable is required to connect the CG150 CAN USB Gateway with the Automotive Control (AC). The pigtail cable transitions from DEUTSCH to DSUB connector and contains terminating resistors to enable CAN communication.

Kit name	Lead wire diameter	Material number
Assembly bag with 1 DEUTSCH connector	24-20 AWG (0.21-0.52 mm^2)	11033864
DTM06-3S grey and gold plated pins	20-14 AWG (0.52-2.24 mm^2)	11072736
Adapter cable DEUTSCH DTM06-3S to D-SUB pin female connector with 120Ω resistor		11153051

MP1 pumps size 28-45cc model code

	Prod	A	B	C	D	F	H	J	T	K	E	M	N	Z	L	V	G	W	X	Y
MP1	P			N N N			F							N N						

Automotive control parts for MP1

D – Controls

Code	AC Type	Supply Voltage	Pump rpm sensor connection	Special settings Y
AJ1	AC-1	12V	yes	AF1E, AF2E, AF1F AF3J
AJ3	AC-2 with swashplate angle sensor	12V	yes	AF2J, AF4J
AU1	AC-1	12V	-	AF1E, AF2E, AF1F, AF3J
AU3	AC-2 with swashplate angle sensor	12V	-	AF2J, AF4J

F – Orifices

Code	Tank (A+B)	P orifice	A/B orifice
C1	-	-	0.8 mm
C2	-	-	1.3 mm
C4	-	-	1.0 mm

E – Displacement limiter

Code	Description
C	No limiters, with nested springs, required for NFPE, AC, FDC
D	Adjustable externally with nested springs, required for NFPE, AC, FDC

Align with option Y: Settings for adjustment (if applicable).

V – Charge pressure relief

Code	Description
24	24 bar [348 psi]
26	26 bar [377 psi]
28	28 bar [406 psi]

G - Mounting flange

Code	Description	
A1	System ports are inch, O-ring boss per ISO 11926-1	Option without speed sensor. EEC1 speed signal from the CAN engine is needed. Control pairing: AU1, AU3
B1	Split flange system ports are inch, O-ring boss per ISO 6162-2, frame size 38/45cc	
C1	System ports are metric, O-ring boss per ISO 6149-1	
D1	Split flange system ports are inch, O-ring boss per ISO 6162-2; all other ports are metric, O-ring boss per ISO 6149-1, frame size 38/45cc	
A4	System ports are inch, O-ring boss per ISO 11926-1	Option with pump speed sensor and with cable harness. Control pairing: AJ1, AJ3
B4	Split flange system ports are inch, O-ring boss per ISO 6162-2, frame size 38/45cc	
C4	System ports are metric, O-ring boss per ISO 6149-1	
D4	Split flange system ports are inch, O-ring boss per ISO 6162-2; all other ports are metric, O-ring boss per ISO 6149-1, frame size 38/45cc	

MP1 pumps size 28-45cc model code

W – Special hardware features

Code	Description
RBC	NFPE valve plate, CW, 28 cm^3
LBC	NFPE valve plate, CCW, 28 cm^3
RBD	NFPE valve plate, CW, 32 cm^3
LBD	NFPE valve plate, CCW, 32 cm^3
RBE	NFPE valve plate, CW, 38 cm^3
LBE	NFPE valve plate, CCW, 38 cm^3
RBF	NFPE valve plate, CW, 45 cm^3
LBF	NFPE valve plate, CCW, 45 cm^3

Align with A: Displacement and rotation and D: controls.

Y - Special settings

Code	Description	Control pairing
AF1F	Standard propel functionality	AJ1, AU1
AF2E	Standard propel functionality + ECO mode	
AF1E	Standard propel functionality + ECO mode + Kubota Engine Protocol	
AF3J	Standard propel functionality + ECO mode + cruise control	
AF2J	Standard propel functionality + ECO mode + cruise control + Kubota Engine Protocol (recommended when using wheel motors without speed sensor)	AJ3, AU3
AF4J	Standard propel functionality + ECO mode + cruise control (recommended when using wheel motors without speed sensor)	

H1 pumps size 45-250cc model code

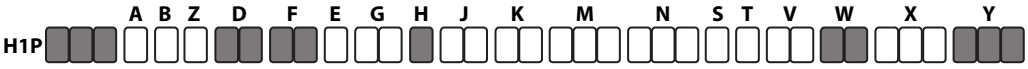

Automotive control parts for H1P

045	053	060	068	069	078	089	100	115	130	147	165	210	250
45.0 [2.75]	53.8 [3.28]	60.4 [3.69]	68.0 [4.15]	69.0 [4.22]	78.0 [4.76]	89.2 [5.44]	101.7 [6.21]	115.8 [7.07]	130.8 [7.98]	147.0 [8.97]	165.0 [10.07]	211.5 [12.91]	251.7 [15.36]

D – Controls

Code	AC Type	Supply Voltage	Pump rpm sensor connection	Special settings Y
J1	AC-1	12V	yes	F1F, F1E, F3J, F6L, F7E
J2		24V	yes	F1F, F1E, F3J, F6L, F7E
J3	AC-2 with swashplate angle sensor	12V	yes	F4J, F2J
J4		24V	yes	F4J, F2J
U1	AC-1	12V	-	F1F, F1E, F3J, F6L, F7E
U2		24V	-	F1F, F1E, F3J, F6L, F7E
U3	AC-2 with swashplate angle sensor	12V	-	F4J, F2J
U4		24V	-	F4J, F2J

F – Orifices

Code	Tank (A+B)	P orifice	A/B orifice
C2	-	-	1.3 mm
C4	-	-	1.8 mm
D7	-	-	3.0 mm
D8	-	-	2.3 mm

E – Displacement limiter

Code	Description
C	No limiters, with nested springs, required for NFPE, AC, FDC
D	Adjustable externally with nested springs, required for NFPE, AC, FDC

Align with option Y: Settings for adjustment (if applicable)

V – Charge pressure relief setting

Code	Description
26	26 bar [377 psi]
28	28 bar [406 psi]
30	30 bar [435 psi]
32	32 bar [464 psi]
34	34 bar [493 psi]

W – Special hardware features (align with options D and E)

Code		Control pairings
P1	NFPE/AC valve plate	U1, U2, U3, U4
P2	NFPE/FDC/AC valve plate and speed ring on the cylinder block	J1, J2, J3, J4

Align with D controls.

H1 pumps size 45-250cc model code

Y – Special settings

Code	Description	Control pairings
F1F	Standard propel functionality	J1, J2, U1, U2
F2E	Standard propel functionality + ECO mode	
F1E	Standard propel functionality + ECO mode + Kubota Engine Protocol	
F3J	Standard propel functionality + ECO mode + cruise control	
F2J	Standard propel functionality + ECO mode + Kubota engine protocol Recommended when using wheel motors without speed sensor.	J3, J4, U3, U4
F4J	Standard propel functionality + ECO mode + cruise control Recommended when using wheel motors without speed sensor.	
F6L	Standard propel functionality + ECO mode (recommended when using H1B hydromotor without PCOR)	J1, J2,U1, U2

ENGINEERING
TOMORROW

Products we offer:

- DCV directional control valves
- Electric converters
- Electric machines
- Electric motors
- Gear motors
- Gear pumps
- Hydrostatic motors
- Hydrostatic pumps
- Orbital motors
- PLUS+1® controllers
- PLUS+1® displays
- PLUS+1® joysticks and pedals
- PLUS+1® operator interfaces
- PLUS+1® sensors
- PLUS+1® software
- PLUS+1® software services, support and training
- Position controls and sensors
- PVG proportional valves
- Steering components and systems
- Telematics

Danfoss Power Solutions is a global manufacturer and supplier of high-quality hydraulic and electric components. We specialize in providing state-of-the-art technology and solutions that excel in the harsh operating conditions of the mobile off-highway market as well as the marine sector. Building on our extensive applications expertise, we work closely with you to ensure exceptional performance for a broad range of applications. We help you and other customers around the world speed up system development, reduce costs and bring vehicles and vessels to market faster.

Danfoss Power Solutions – your strongest partner in mobile hydraulics and mobile electrification.

Go to www.danfoss.com for further product information.

We offer you expert worldwide support for ensuring the best possible solutions for outstanding performance. And with an extensive network of Global Service Partners, we also provide you with comprehensive global service for all of our components.

Hydro-Gear
www.hydro-gear.com

Daikin-Sauer-Danfoss
www.daikin-sauer-danfoss.com

Local address:

Danfoss
Power Solutions (US) Company
2800 East 13th Street
Ames, IA 50010, USA
Phone: +1 515 239 6000

Danfoss
Power Solutions GmbH & Co. OHG
Krokamp 35
D-24539 Neumünster, Germany
Phone: +49 4321 871 0

Danfoss
Power Solutions ApS
Nordborgvej 81
DK-6430 Nordborg, Denmark
Phone: +45 7488 2222

Danfoss
Power Solutions Trading (Shanghai) Co., Ltd.
Building #22, No. 1000 Jin Hai Rd
Jin Qiao, Pudong New District
Shanghai, China 201206
Phone: +86 21 2080 6201