ENGINEERING
TOMORROW

Data sheet

Flanged ICV for Regulators, Solenoids, Motorized valves and Gas-powered suction valves

Type ICS-(H)A4A, ICS-(H)S4A, ICM-HMMV, ICM-HMMR and ICLX-S9A

ICS
Pilot operated servo valve

ICM
Motor operated valve

ICLX
2-step solenoid valve

With the introduction of the flanged ICV - the drop in replacement valve for all common flanged control valves on the market - Danfoss has invigorated Industrial retrofitting.
The ICV valve family includes 3 different configurations.

The well-known pilot controlled ICS ((H)A4A) which comes as a 1- or 3 pilot variant. Together with the comprehensive program of pilots and numerous pilot configurations, all common used pilot regulations can be achieved.

The motor controlled ICM in 2 variants HMMR and HMMV, which besides very accurate regulation also handles and controls direct expansion.

The gas-powered 2 step solenoid valve ICLX (S9A) designed for closing and opening of suction line after defrost with minimum pressure drop at normal operation.

Applications:

- Liquid line inlet for flooded evaporators
- Hot gas line for defrosting
- Crankcase pressure control
- Evaporator pressure control
- Liquid pressure control
- Constant temperature control
- Expansion control
- 2 step opening after defrost

Features

- Designed for industrial refrigeration applications for a maximum working pressure of 406 psig / 28 bar g.
- Applicable to HCFC, HFC and R717 (Ammonia).
- Low temperature steel body.
- Low weight and compact design.
- V-port regulating cone ensures optimum regulating accuracy particularly at part load.
- Function module has a QPQ surface treated insert and a steel piston ring ensuring precise control accuracy.
- Modular Concept:
  - Valve overhaul is done by replacing the function module.
  - Interchangeability between ICS pilot-operated servo valve, ICM motor operated valve and ICLX 2-step solenoid valve
- Manual opening.
- PTFE seat provides excellent valve tightness.
- The top cover can be rotated into any possible position without affecting the operation of the valve.

Contents **Page**

Features 1
Introduction 3
Design 4
Concept 5

ICS-(H)A4A and ICS-(H)S4A

ICS capacities 6
ICS function 7
ICS material specification 9
ICS configuration and ordering 10
ICS pilots 12
ICS accessories 13
ICS dimensions 15

ICM-HMMV and ICM-HMMR

ICM capacities 16
ICM function 17
ICAD actuator details 18
ICM material specification 22
ICM ordering 23
ICM and ICAD accessories 23
ICM and ICAD dimensions 24

ICLX-S9A

ICLX capacities 25
ICLX function 26
ICLX material specification 28
ICLX ordering 29
ICLX accessories 29
ICLX dimensions 30

© Danfoss | DCS (ms) | 2020.09

Introduction

The ICS servo variant is a pilot-operated valve for regulation of pressure, temperature and/or with an On/Off function for a refrigeration system. The valve is suitable for low- and high-pressure refrigerants and can be used in all locations in the system, when not exposed to phase change (no expansion over the valve).

The ICS is available with 1 or 3 pilot ports and together with optional external pilot lines, numerous variations in control functions can be obtained.

The ICM motor variant is an electronic controlled valve driven by the actuator type ICAD.
The ICM valve is designed to control pressure or temperature in all locations of a refrigeration system and additional the valve is designed to control an expansion process (expansion over the valve).

The opening and closing forces in the ICM are minimized thus only 2 sizes of ICAD are required.

The ICLX servo variant is a solenoid pilot-operated valve for opening of suction line against high differential pressure e.g. after hot gas defrost.

The ICLX is factory default configured to open in 2 steps. First step opens to 10% of full capacity while step two automatically, based on decreased pressure differential, opens to 100%.
It is easy to modify the valve configuration from 2 steps to 1 step.

The ICLX solenoid function is achieved by 2 pilot solenoid valves operating simultaneous and controlled by only one signal.

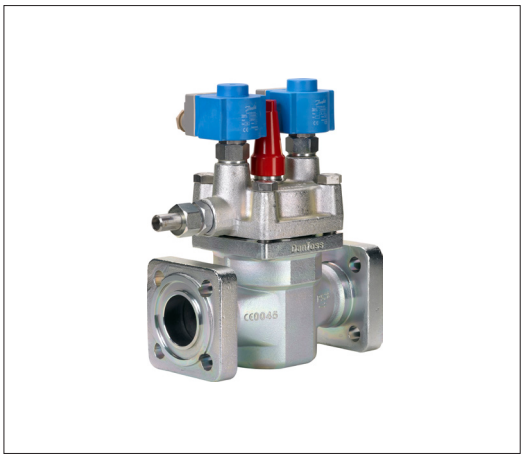

All 3 valve variants are provided with a manual opening option.

Design

ICS valves are designed as pilot operated valves requiring minimal pressure differential to open. If the pressure difference is 0 psi (0 bar), the ICS valve will be closed. If the pressure difference is 3 psi (0.2 bar) or more, the ICS valve will be fully open. At pressure differences between 1 psi (0.07 bar) and 3 psi (0.2 bar), the opening degree will be correspondingly proportional.

The ICS is available for use with either one or three pilot valves.

Two of the three pilot pressure connections (S1 and S2) are connected in series whilst the third (P) is connected in parallel to S1 and S2. This allows different combinations of pilot valves to be used, thus providing numerous variations in control functions.

ICM valves are designed as hermetic encapsulated valves driven by the fitted stepper motor ICAD via a through-the-wall magnetic field. The valve opening degree is completely independent of internal system pressures and opening forces are balanced and reduced to achieve MOPD's up to max working pressure i.e. 406 psi (28 bar).

The ICAD display allows, through an accurate encoder feedback system, continuous observations of valve opening degree.

ICLX valves are designed for 2 (or 1) step ON/OFF solenoid valve function operated by one EVM NC and one EVM NO solenoid pilots. The EVM NC and NO coils are controlled by the same electric signal thus limited wiring is needed.
The pressure and flow required for opening of the main valve comes from an external source and therefor the opening is independent of internal pressures and the pressure drop through the valve is reduced to a minimum.
The modification from 2 step to 1 step is done mechanically by changing 2 bolts inside the valve.
MOPD of the valve is designed to 22 Psi (1.5 bar) less than P(external source).

Approvals
CE

Valve body and top cover material
Low temperature steel

ICV valves			
Nominal bore	DN≤ 25 (1 in.)	DN 32 (1¼ in.)	DN 40 - 65 (1½ in. – 2½ in.)
Classified for	Fluid group I		
Category	Article 3, paragraph 3	I	II

Technical data

- *Refrigerants*
  Applicable to HCFC, HFC and R717(Ammonia).
- *Temperature range*
  –76/+248°F (–60/+120°C).
- *Surface protection*
  The external surface is zinc-chromated to provide good corrosion protection.
- *Pressure range*
  406 psig (28 bar)

© Danfoss | DCS (ms) | 2020.09

Concept

The concept is developed around a modular principle. This gives the interchangeability of function modules/top covers with the matching valve body.

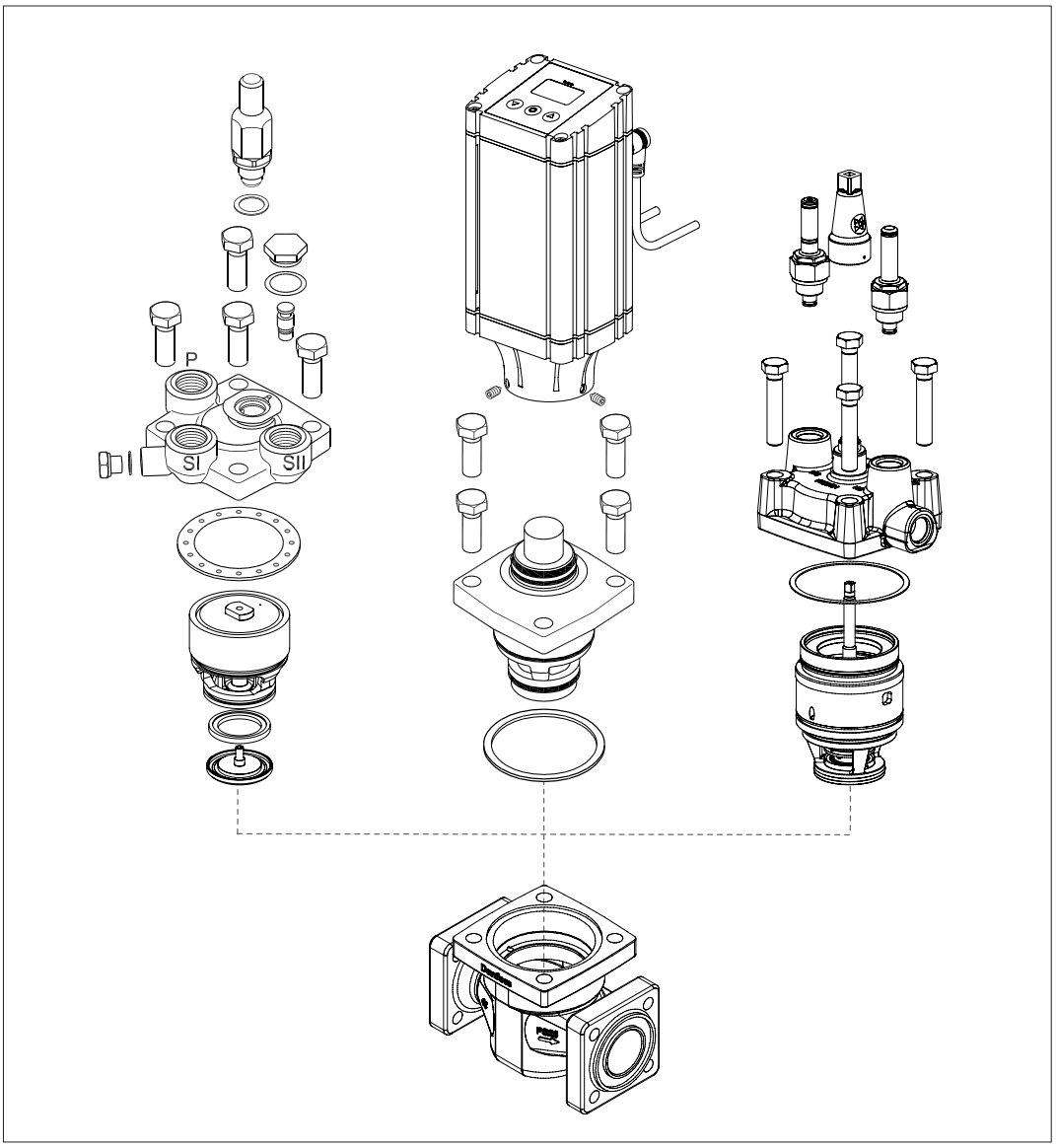

ICS-(H)A4A and ICS-(H)S4A

ICS capacities

ICS with 1 pilot

ICS with 3 pilots

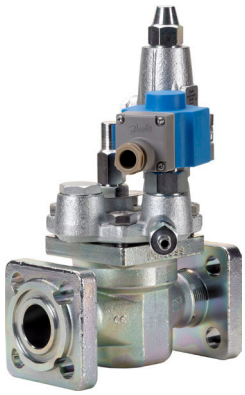

In ICS, multiple inserts (function modules) are available to give different capacities.

Type	Valve body size	C_v (USgal/min)	K_v (m^3/h)
ICS 5	25	2.0	1.7
ICS 10		4.1	3.5
ICS 15		7.0	6.0
ICS 20		9.3	8
ICS 25		13.3	11.5
ICS 32	32	20	17
ICS 40	40	31	27
ICS 50	50	51	44
ICS 65	65	81	70

ICS 5, 10, 15, 20 & 25 share same valve body size and flange connection. Only insert is designed to create different flow values.

© Danfoss | DCS (ms) | 2020.09

ICS function

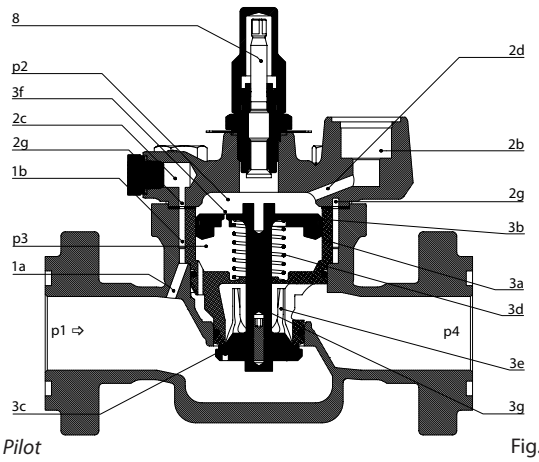

ICS 1 Pilot Fig. 1

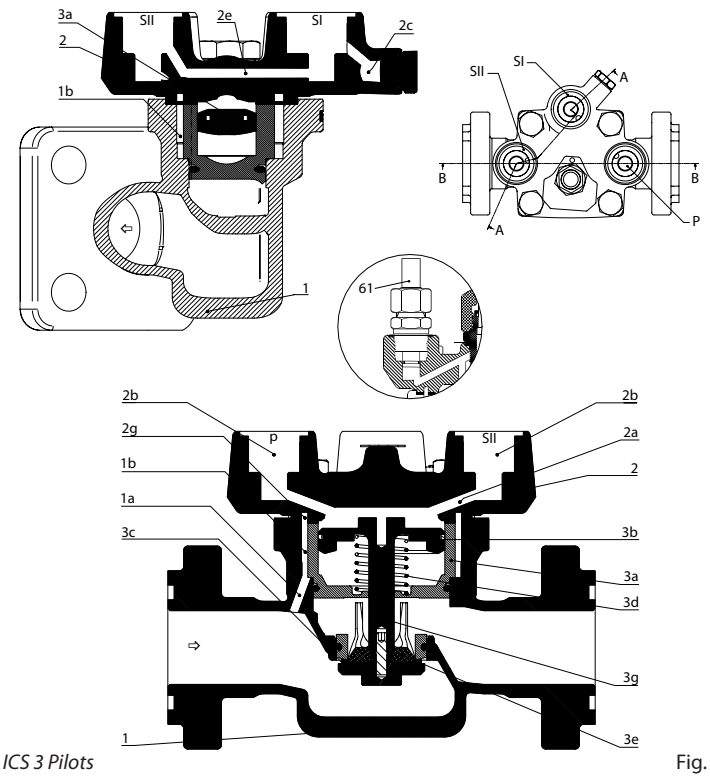

ICS 3 Pilots Fig. 2

The ICS main valve is a pilot operated valve. The types of pilot valves used determine the function. The ICS main valve with pilot valve(s) controls refrigerant flow by modulation or on/off in accordance with the pilot valve and main valve status. The manual spindle can be used to manually open the valve.

The opening degree of the main valve is determined by the pressure difference (differential pressure) between pressure p_2, which acts on top of the servo piston (3b), and pressure p_3, which acts on the underside of the servo piston.

If this pressure difference is 0, the main valve will be fully closed.
If the pressure difference is 2.9 psi (0.2 bar) or greater, the main valve will be fully open.
At pressure differences (p_2 - p_3) between 1 psi (0.07 bar) and 2.9 psi (0.2 bar), the degree of opening will be correspondingly proportional.

The port of the throttle cone (3e) is V-shaped, which provide good regulation characteristic to pilot operated main valves even at low loads.
P_3 pressure is equal to the valve outlet pressure (P_4), due to a clearance between the piston rod (3g) and the function module. The opening degree of the ICS valve is therefore controlled by the P_2 pressure acting on top of the servo piston, which is equal to or greater than valve outlet pressure (P_4).

The maximum pressure (p_2) can act on the top of the servo piston (3b). p_2 normally corresponds to the pressure, p_1 - ICS main valve inlet pressure.

Inlet pressure p_1 is led, via the drilled channels (1a, 1b, 2f, 2b (pilot), 2a, 2d) in the valve body (1) and cover (2) through the individual pilot valves and onto the top of the servo piston (3b).

The degree of opening of the individual pilot valves determines the magnitude of pressure p_2 and thus the degree of opening of the main valve. The equalization hole (3f) in the servo piston (3b) ensures that pressure p_2 is balanced in accordance with the degree of opening of the pilot valve.

Note:
When ICS valves with 3 pilot ports are used with external pressure connector (fig. 2, pos. 61), the valve port inlet pressure will be isolated.

The ICS can be fitted with just a single screwed-in pilot valve or external pilot connection. The degree of opening of the main valve will be in accordance with the control status of the pilot valve or external pilot flow control.
ICS main valve with one pilot connection is fully closed when the pilot valve is fully closed and fully open when the pilot valve is fully open. Otherwise the degree of opening of the main valve is proportional to the degree of opening of the pilot valve.

The ICS 3 pilot version can be fitted with one, two, or three pilot valves so that up to three regulating functions are possible. If the external pilot connection is used, more functions can be added.

ICS function *(continued)*

In the ICS three pilot version, the pilot ports are related as follows:

- The pilot valves fitted in ports SI and SII are connected in series.
- The ICS 3 pilot operated main valve will be fully closed if just one of the series-connected
- pilot valves is closed. The main valve can only open if both pilot valves are open at the same time.
- The pilot valve fitted in port P is connected in parallel to the pilot valves in ports SI and SII.

The ICS valve will be fully open if the pilot valve in P is fully open, irrespective of the degree of opening of pilot valves SI and SII.
The ICS valve will be fully closed if the pilot valve in P is fully closed and at least one of the valves in SI or SII is fully closed at the same time. The relation between the pilot valves in ports SI, SII and P is shown in Table 1 below.

If the ICS is not fitted with three pilot valves, the unused port(s) must be sealed with a pilot cap A or a combination of pilot cap A and blanking plug B. If the pilot cap and blanking plug are fitted as an assembled unit, A + B, the channels from the specific port will be closed. (See Figure 1)

If only cap A is fitted, the channels from the ports in question will be open. If the degree of opening of the ICS main valve is not to be a function of the main valve inlet pressure, or if more than three regulating functions are required, ports SI, SII or P can be fitted with a nipple for the connection of external pilot pressure. This applies to all ICS versions.

The pressure to which the external pilot line is connected will then determine the main valve function. Pilot valves installed in external lines must be mounted in a type CVH housing.

Depending on the function of the pilot valves, the ICS regulating characteristic becomes:

- on/off
- proportional
- integral or
- cascade.

ICS main valves are therefore especially suitable for all forms of temperature and pressure regulating systems.

An overview of the types of pilot valves available can be found in the accessories section.

Table 1

Pilot valve port			ICS valve
SI	SII	P	
Open	Open	Closed	Open
Open	Open	Open	Open
Open	Closed	Closed	Closed
Open	Closed	Open	Open
Closed	Open	Closed	Closed
Closed	Open	Open	Open
Closed	Closed	Closed	Closed
Closed	Closed	Open	Open

Figure 1

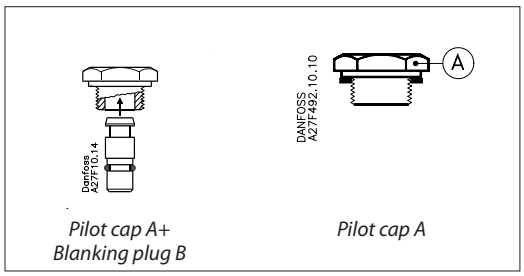

Figure 2

Example (ICS with 3 pilot valves)

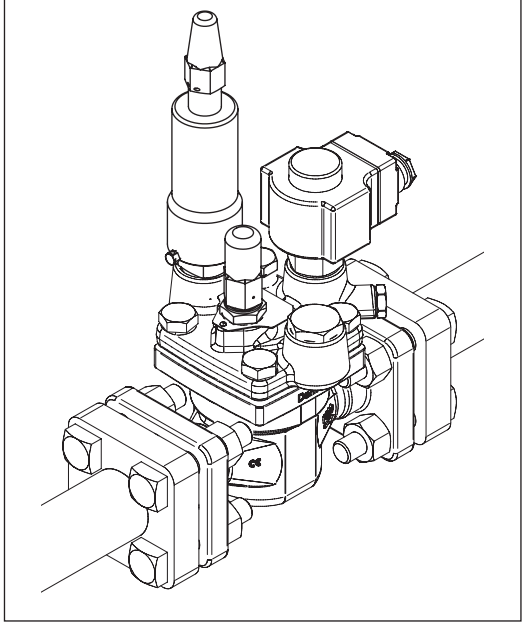

© Danfoss | DCS (ms) | 2020.09

ICS material specification

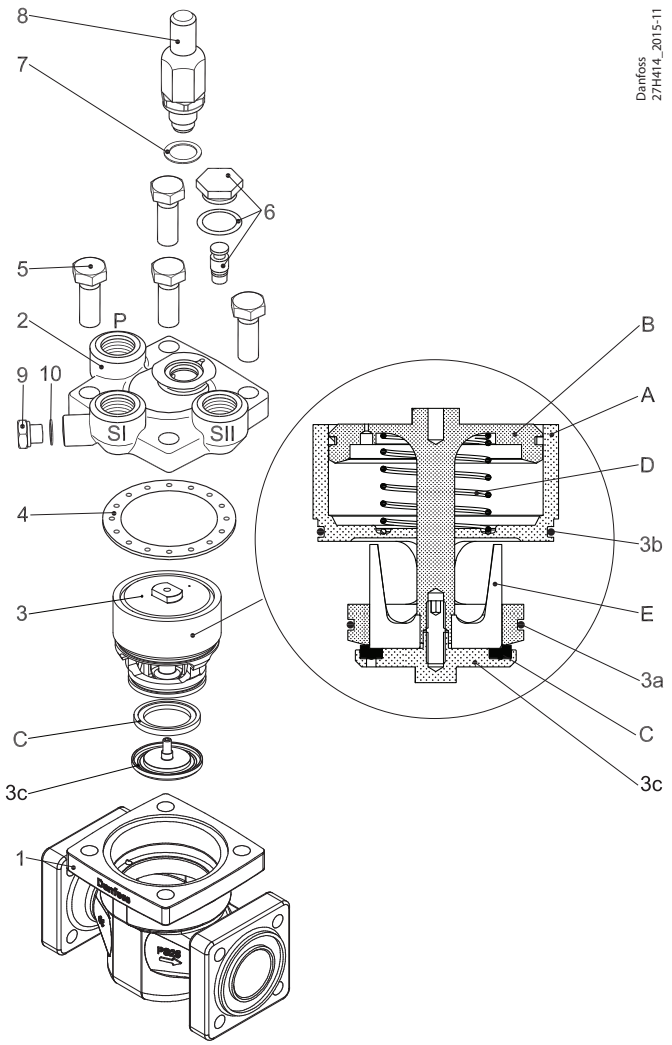

Type and size of Bolt (pos. 5)

Valve body	Screw
25	M12 × 30 A2-70 DIN 933
32	M14 × 35 A2-70 DIN 933
40	M14 × 40 A2-70 DIN 933
50	M16 × 40 A2-70 DIN 933
65	M16 × 50 A2-70 DIN 933

No.	Part	Material	EN	ASTM	JIS
1	Body	Low temperature steel	G20Mn5QT, EN 10213-3	LCC A352	SCPL1 G5151
2	Top cover	Low temperature steel	G20Mn5QT, EN 10213-3 P285QH+QT 10222-4	LCC A352 LF2, A350	SCPL1 G5151
3	Function module (assembled)				
3a	o-ring	Cloroprene (Neoprene)			
3b	o-ring	Cloroprene (Neoprene)			
3c	Washer plate	Steel			
A	Cylinder	Steel			
B	Piston	Steel			
C	Valve plate	PTFE			
D	Spring	Steel			
E	Cone	Steel			
4	Gasket	Fiber, non-asbestos			
5	Bolts	Stainless steel	A2-70, EN 1515-1	Grade B8 A320	A2-70, B 1054
6	Plug	Steel			
7	Gasket	Aluminium			
8	Manual operating spindle	Steel			
9	Plug	Steel			
10	Gasket	Aluminium			

ICS configuration and ordering

Solenoid function

Solenoid Valve
ICS + EVM

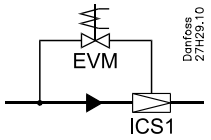

Type	C_v [gpm]	K_v [m³/h]	Code number
ICS 20 (H)S4A ¾ in.*	9.3	8	**148X0866**
ICS 25 (H)S4A 1 in.*	13.3	11.5	**148X0853**
ICS 32 S4A 1¼ in.*	20	17	**148X0854**
ICS 32 HS4A 1¼ in.*	20	17	**148X0855**
ICS 40 (H)S4A 1½ in.*	31	27	**148X0856**
ICS 50 (H)S4A 2 in.**	51	44	**148X0857**
ICS 65 (H)S4A 2½ in.**	81	70	**148X0858**

* Includes flange gaskets and flange bolts.
** Includes flange gaskets, flange bolts and flange nuts.

Inlet pressure regulating - STD

Pressure Regulator
ICS + CVP

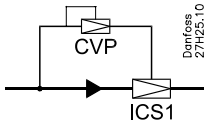

Type	C_v [gpm]	K_v [m³/h]	Code number
ICS 20 - STD - (H)A4A ¾ in. (19.5 in HG to 102 psig)*	9.3	8	**148X0860**
ICS 25 - STD - (H)A4A 1 in. (19.5 in HG to 102 psig)*	13.3	11.5	**148X0847**
ICS 32 - STD - A4A 1¼ in. (19.5 in HG to 102 psig)*	20	17	**148X0848**
ICS 32 - STD - HA4A 1¼ in. (19.5 in HG to 102 psig)*	20	17	**148X0849**
ICS 40 - STD - (H)A4A 1½ in. (19.5 in HG to 102 psig)*	31	27	**148X0850**
ICS 50 - STD - (H)A4A 2 in. (19.5 in HG to 102 psig)**	51	44	**148X0851**
ICS 65 - STD - (H)A4A 2½ in. (19.5 in HG to 102 psig)**	81	70	**148X0852**

Please check compliance before ordering
* Includes flange gaskets and flange bolts.
** Includes flange gaskets, flange bolts and flange nuts.

Inlet press. Regulator w/ electric shut-off - S

Pressure Regulator
ICS + EVM + CVP +
plug A+B

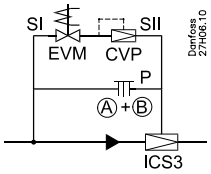

Type	C_v [gpm]	K_v [m³/h]	Code number
ICS 20 - S - (H)A4AS ¾ in. (19.5 in HG to 102 psig)*	9.3	8	**148X0966**
ICS 25 - S - (H)A4AS 1 in. (19.5 in HG to 102 psig)*	13.3	11.5	**148X0967**
ICS 32 - S - A4AS 1¼ in. (19.5 in HG to 102 psig)*	20	17	**148X0968**
ICS 32 - S - HA4AS 1¼ in. (19.5 in HG to 102 psig)*	20	17	**148X0969**
ICS 40 - S - (H)A4AS 1½ in. (19.5 in HG to 102 psig)*	31	27	**148X0970**
ICS 50 - S - (H)A4AS 2 in. (19.5 in HG to 102 psig)**	51	44	**148X0971**
ICS 65 - S - (H)A4AS 2½ in. (19.5 in HG to 102 psig)**	81	70	**148X0972**

Please check compliance before ordering
* Includes flange gaskets and flange bolts.
** Includes flange gaskets, flange bolts and flange nuts.

Inlet press. Regulator w/ electric wide-opening - B

Pressure Regulator
ICS + EVM + CVP + plug A

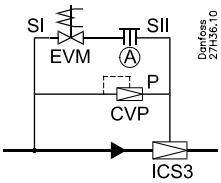

Type	C_v [gpm]	K_v [m³/h]	Code number
ICS 20 - B - (H)A4AB ¾ in. (19.5 in HG to 102 psig)*	9.3	8	**148X0973**
ICS 25 - B - (H)A4AB 1 in. (19.5 in HG to 102 psig)*	13.3	11.5	**148X0974**
ICS 32 - B - A4AB 1¼ in. (19.5 in HG to 102 psig)*	20	17	**148X0975**
ICS 32 - B - HA4B 1¼ in. (19.5 in HG to 102 psig)*	20	17	**148X0976**
ICS 40 - B - (H)A4AB 1½ in. (19.5 in HG to 102 psig)*	31	27	**148X0977**
ICS 50 - B - (H)A4AB 2 in. (19.5 in HG to 102 psig)**	51	44	**148X0978**
ICS 65 - B - (H)A4AB 2½ in. (19.5 in HG to 102 psig)**	81	70	**148X0979**

Please check compliance before ordering
* Includes flange gaskets and flange bolts.
** Includes flange gaskets, flange bolts and flange nuts.

© Danfoss | DCS (ms) | 2020.09

ICS configuration and ordering

Dual Pressure regulator - D

Pressure Regulator
ICS + EVM + CVP + CVP

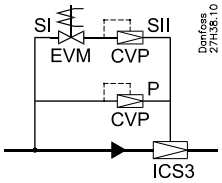

Type	C_v [gpm]	K_v [m³/h]	Code number
ICS 20 - D - (H)A4AD ¾ in. (19.5 in HG to 102 psig)*	9.3	8	**148X0980**
ICS 25 - D - (H)A4AD 1 in. (19.5 in HG to 102 psig)*	13.3	11.5	**148X0981**
ICS 32 - D - A4AD 1¼ in. (19.5 in HG to 102 psig)*	20	17	**148X0982**
ICS 32 - D - HA4AD 1¼ in. (19.5 in HG to 102 psig)*	20	17	**148X0983**
ICS 40 - D - (H)A4AD 1½ in. (19.5 in HG to 102 psig)*	31	27	**148X0984**
ICS 50 - D - (H)A4AD 2 in. (19.5 in HG to 102 psig)**	51	44	**148X0985**
ICS 65 - D - (H)A4AD 2½ in. (19.5 in HG to 102 psig)**	81	70	**148X0986**

Please check compliance before ordering
* Includes flange gaskets and flange bolts.
** Includes flange gaskets, flange bolts and flange nuts.

Electronically controlled regulator - J

Pressure Regulator
ICS + CVE

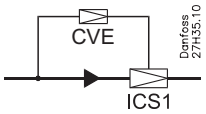

Type	C_v [gpm]	K_v [m³/h]	Code number
ICS 20 - J - HA4AJ ¾ in.*	9.3	8	–
ICS 25 - J - HA4AJ 1 in.*	13.3	11.5	–
ICS 32 - J - HA4AJ 1¼ in.*	20	17	–
ICS 40 - J - HA4AJ 1½ in.*	31	27	–
ICS 50 - J - HA4AJ 2 in.**	51	44	–
ICS 65 - J - HA4AJ 2½ in.**	81	70	–

* Includes flange gaskets and flange bolts.
** Includes flange gaskets, flange bolts and flange nuts.

Electronically controlled regulator - JD

Pressure Regulator
ICS + EVM + CVP + CVE

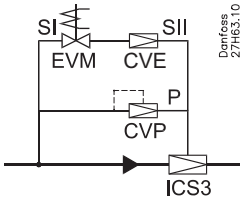

Type	C_v [gpm]	K_v [m³/h]	Code number
ICS 20 - JD - HA4A ¾ in.*	9.3	8	–
ICS 25 - JD - HA4A 1 in.*	13.3	11.5	–
ICS 32 - JD - HA4A 1¼ in.*	20	17	–
ICS 40 - JD - HA4A 1½ in.*	31	27	–
ICS 50 - JD - HA4A 2 in.**	51	44	–
ICS 65 - JD - HA4A 2½ in.**	81	70	–

* Includes flange gaskets and flange bolts.
** Includes flange gaskets, flange bolts and flange nuts.

Inlet press. Regulator w/ electric wide-opening and shut off - BS

Pressure Regulator
ICS + EVM + CVP + EVM

* Please contact Danfoss

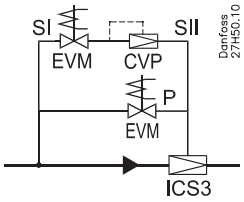

Type	C_v [gpm]	K_v [m³/h]	Code number
ICS 20 - BS - (H)A4A ¾ in.*	9.3	8	–
ICS 25 - BS - (H)A4A 1 in.*	13.3	11.5	–
ICS 32 - BS - A4A 1¼ in.*	20	17	–
ICS 32 - BS - HA4A 1¼ in.*	20	17	–
ICS 40 - BS - (H)A4A 1½ in.*	31	27	–
ICS 50 - BS - (H)A4A 2 in.**	51	44	–
ICS 65 - BS - (H)A4A 2½ in.**	81	70	–

* Includes flange gaskets and flange bolts.
** Includes flange gaskets, flange bolts and flange nuts.

ICS pilots

Pilot valves

	Type	Description	Range		MWP		Code number
			psig	Bar	psig	Bar	
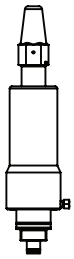	CVP-L	Pilot Valve, Inlet Pressure	19.5 in Hg to 102	-0.66 to 7	754	52	**027B0920**
	CVP-M/H	Pilot Valve, Inlet Pressure	58 to 406	4 to 28	754	52	**027B0921**
			363 to 754	25 to 52	754	52	**027B0922**
	CVE	Pilot Valve, Electronic operated by ICAD stepper motor	19.5 in Hg to 116	-0.66 to 8	754	52	**027B0980**
	EVM (NC)	Pilot Valve, Solenoid (Normally Closed) Does Not Include Coil	-	-	943	65	**027B1120**
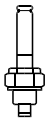	EVM (NO)	Pilot Valve, Solenoid (Normally Open) Does Not Include Coil	-	-	754	52	**027B1130**

© Danfoss | DCS (ms) | 2020.09

ICS accessories

Pressure gauge adapter.

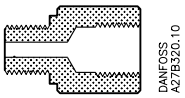

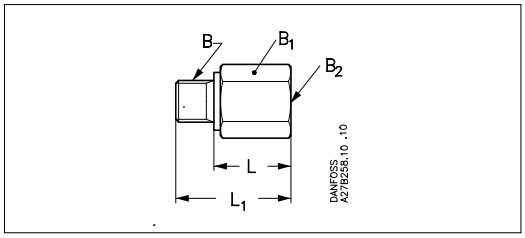

Description	Code no.
¼ FPT adapter	**027B2062**

Dimensions			L	L_1		B	B_1	B_2
	in. mm		0.91 23	1.40 35.5		G ¼ A	AF 22	¼ FPT

Decription	Code no.
Pressure Gauge Connection Adapter and SNV-ST ¼" MPT x ¼" FPT gauge valve	**027X0233**

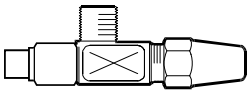

Blanking plug for pilot valves.

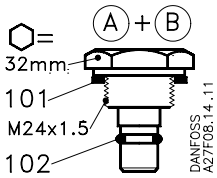

Description	Code no.
Blanking plug	**027F1046**

External pilot connection, 1/4" female - NPT

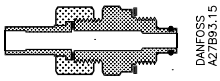

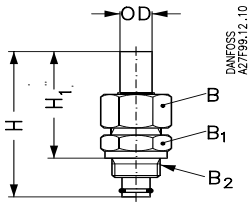

ICS	Description	Code no.
25-65	External pilot connection, ¼" female - NPT (incl. damping orifice, D: 1.0 mm)	**027B2065**

Dimensions			H	H_1	OD	B	B_1	B_2
	in. mm		3.54 90	2.60 66	0.71 18	AF 32	AF 32	M 24 × 1.5

Multi-function tool

Description	Code no.
For all sizes of ICS and ICM 20 to 32	**027H0180**
For all sizes of ICS and ICM 40 to 65	**027H0181**

The multi-function tool can be used for:

- Removing the ICS function module
- Operating the ICS manual spindle
- Manually operating motorized valve type ICM

ICS accessories

Flare

Pressure gauge connection, ¼ in. flare (self-closing)
Must not be used in R 717 plant.

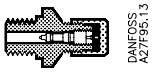

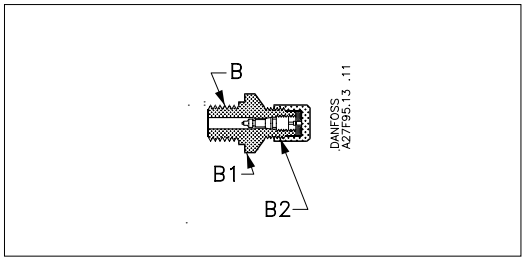

Description	Code no.
¼ in. flare	**027B2041**

Dimensions						B	B_1	B_2
¼ in. flare						G ¼ A	AF 19	¼ in. flare

Cutting ring

Pressure gauge connection

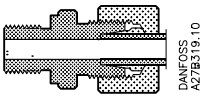

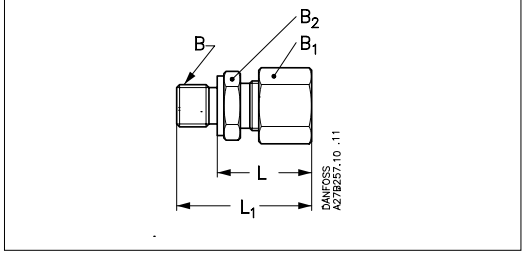

Description	Code no.
Cutting ring connection, ¼ in. (6 mm)	**027B2063**
Cutting ring connection, 3/8 in. (10 mm)	**027B2064**

Dimensions			L	L_1		B	B_1	B_2
¼ in. (6 mm)	in. mm		1.06 27	1.54 39		G ¼ A	AF 19	AF 14
3/8 in. (10 mm)	in. mm		1.14 29	1.57 40		G ¼ A	AF 19	AF 14

Spare parts

ICV 25 (H)A4A Spare Kit	**027H2306**
ICV 32 HA4A Spare Kit	**027H3132**
ICV 32 A4A Spare Kit	**027H3133**
ICV 40 (H)A4A Spare Kit	**027H4130**
ICV 50 (H)A4A Spare Kit	**027H5129**
ICV 65 (H)A4A Spare kit	**027H6130**

All spare kits includes flange gaskets and flange bolts/nuts

© Danfoss | DCS (ms) | 2020.09

ICS Dimensions and weights

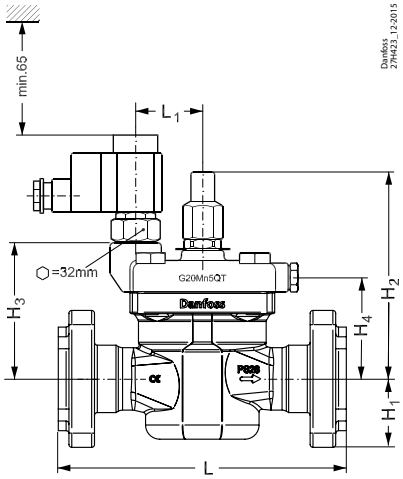

ICS 1 pilot

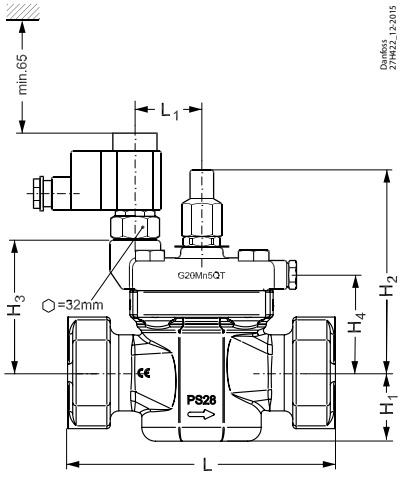

ICS 1 pilot

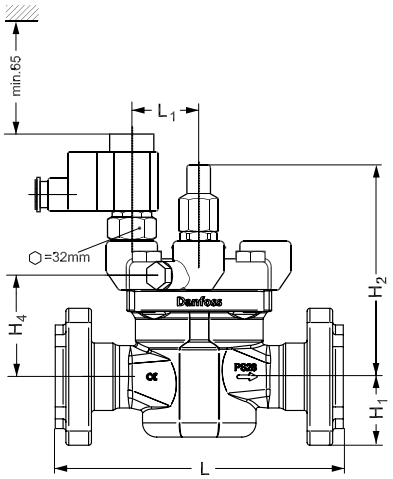

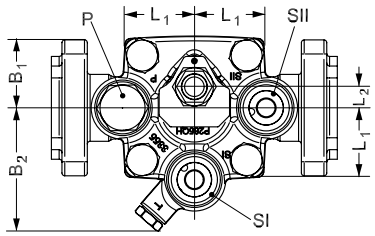

ICS 3 Pilots

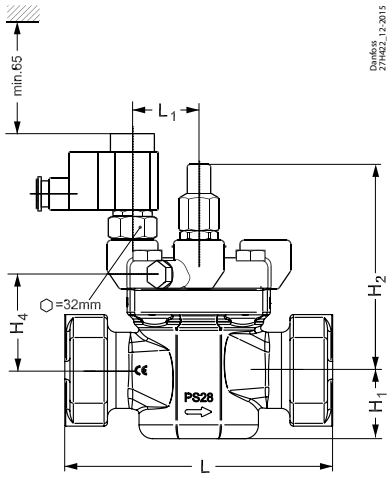

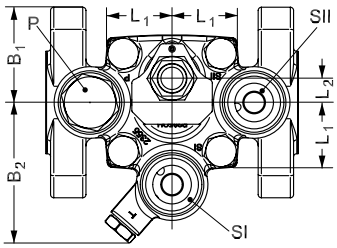

ICS 3 Pilots

Valve size		H_1	H_2	H_3	H_4	L	L_1	L_2	B_1	B_2	Weight ICS 1 Pilot	Weight* ICS 3 Pilots
25 (H)A4A	in.	1.67	5.43	3.39	2.36	6.18	2	0.59	2.33	3.43	9.5 lb.	10.8 lb
	mm	42.5	138	86	60	157	51	15	59.2	87	4.3 kg	4.9 kg
32 HA4A	in.	1.67	6.02	3.93	2.91	6.18	2	0.59	2.36	3.43	12.8 lb.	13.9 lb.
	mm	42.5	153	100	74	157	51	15	60	87	5.8 kg	6.3 kg
32 A4A	in.	1.90	6.02	3.93	2.91	7.99	2	0.59	2.01	3.43	15.6 lb.	16.7 lb.
	mm	48.3	153	100	74	203	51	15	51	87	7.1 kg	7.6 kg
40 (H)A4A	mm	60	159	105	78	251	51	15	60	87	10.9 kg	11.3 kg
	in.	2.36	6.26	4.13	3.07	9.88	2	0.59	2.36	3.43	24.0 lb.	24.9 lb.
50 (H)A4A	in.	2.40	6.85	4.72	3.66	9.88	2	0.59	2.48	3.58	29.3 lb.	29.9 lb.
	mm	61	174	120	93	251	51	15	63	91	13.3 kg	13.6 kg
65 (H)A4A	in.	2.85	7.68	5.51	4.53	9.90	2	0.59	2.85	3.58	43.8 lb.	44 lb.
	mm	72.5	195	140	115	251.5	51	15	72.5	91	19.9 kg	20 kg

* Weight stated is for valve without pilots

ICM-HMMV and ICM-HMMR

ICM capacities

ICM with ICAD actuator

ICM is for each size available in 2 variants for low and high capacity

Type	Valve body size	C_v (USgal/min)	K_v (m^3/h)
ICM 25-HMMR	25	7.0	6
ICM 25-HMMV		13.9	12
ICM 32-HMMR	32	10.4	9
ICM 32-HMMV		20	17
ICM 40-HMMR	40	17	15
ICM 40-HMMV		30	26
ICM 50-HMMR	50	27	23
ICM 50-HMMV		46	40
ICM 65-HMMR	65	41	35
ICM 65-HMMV		81	70

A magnetic coupled actuator is easily installed. Only two actuators are needed to cover the entire ICM program

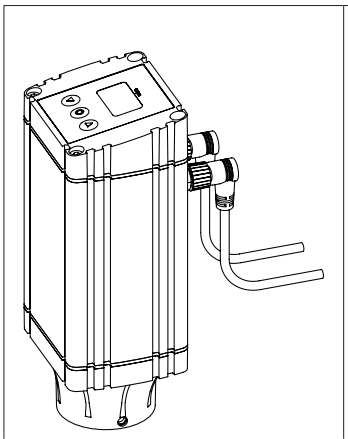

ICAD 600A

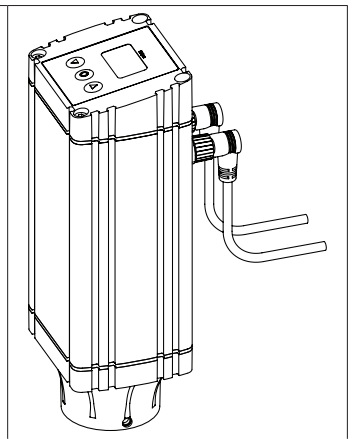

ICAD 1200A

© Danfoss | DCS (ms) | 2020.09

ICM function

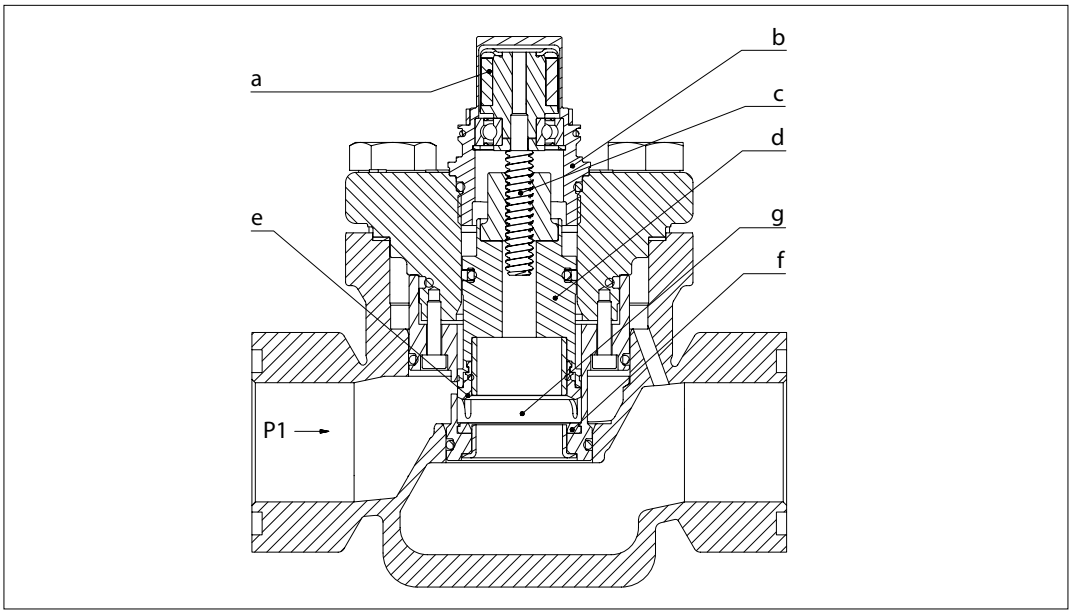

ICM, motor operated valves are designed for use with the ICAD actuator with Display.

The driving force from the actuator is transferred via a magnetic coupling (a) through the stainless steel top housing (b) and thus eliminates the need for a packing gland. The rotational movement of the magnetic coupling (a) is transferred to a spindle (c) which in turn provides the vertical movement of the piston (d) and the valve seat (e), to open and close the valve. The closing force of the actuator, combined with the the valve seat (e) and PTFE valve plate (f), provides an effective seal to prevent leakage across the valve port, when the valve is in the closed position. To prevent damage to the PTFE valve seat (e) and plate (f) from system debris, it is recommended that a filter is installed upstream of the valve.

ICM 25-65:
Valve inlet pressure (P_1) acting on the underside of the PTFE valve seat (e) also passes through the hollow piston assembly (d) on to the top of the piston (d) and balances the pressure acting on the piston (d). Any trapped liquid across the throttle cone (g) is allowed to equalise down to the valve outlet without affecting the valve performance.

ICAD
There are two sizes of ICAD actuator that covers the range of valves from ICM 25 to ICM 65. The actuators have a fully weather protected enclosure with none of the moving parts exposed to the environment.

The fast acting actuators and balanced valve design results in the valve being able to move from the fully closed to the fully open position in between 3 to 45 seconds depending on valve size and ICAD setup.

ICAD actuator details

The ICM motor operated valve and ICAD actuator combinations are as follows:

Actuator	ICAD 600A	ICAD 1200A
Valve size		ICM 40
	ICM 25	ICM 50
	ICM 32	ICM 65

ICAD 600A / ICAD 1200A
ICAD actuators can be controlled using the following signals:

- 0-20 mA
- 4-20 mA (default)
- 0-10 V
- 2-10 V
- One or two digital Input

ICAD actuators can operate an ICM valve as an On/Off function supported by one digital input.

ICAD actuators can operate an ICM valve as Neutral zone / 3 point control supported by two digital inputs.

The ICM valve can be operated manually via the ICAD actuator or the Multi-function tool for ICM (see the ordering section).

Fail Safe supply options
In the event of a power failure, multiple fail safe options are possible, provided that a ICAD-UPS or similar is used.
During power failure, ICM can be selected to:
- Close ICM
- Open ICM
- Stay in the same position, as when power failure occurs
- Go to a specific ICM valve opening degree

See the data sheet DKRCI.PD.HT0.B for further information.

Please note:
A fail safe supply (battery or UPS) is required.

Actuator types ICAD 600A and 1200A are dedicated for use with ICM motor operated valves. There are only two sizes of ICAD actuators that cover the range of valves from ICM 25 to ICM 65.

The ICAD is controlled via a modulating analogue signal (e.g. 4-20 mA/2-10 V) or a digital ON/OFF signal. ICAD incorporates an advanced MMI (Man Machine Interface), including continuous display of Opening Degree, which gives the user a very advanced and flexible setup procedure that can meet many different applications.

Features (actuator)

- Designed for industrial refrigeration installations.
- Advanced and high speed Digital Stepper Motor Technology
- Seven segment LCD display and three programming keys included
- Valve opening degree can be observed continuously.
- Can easily be configured to different applications on-site (change speed, ON/OFF, Fail Safe operation, modulating valve, etc..)
- Open – Close time: 3-45 seconds depending on valve size
- Modulating, ON/OFF operation or Neutral zone / 3 point control
- Multiple speed selection during operation
- Logging of old alarms
- Password protection
- Control input signal :
  4-20 mA, 0-20 mA, 0-10 V, 2-10 V.
  One or two digital inputs.
- Position feed back : 0-20 mA, 4-20 mA (ICM)
- 3 Digital ON/OFF feedback
- Resolution: 20 micron/step
  (0.02 mm stroke pr. step)
- Total steps: 250 – 3650 depending on size
- Auto Calibration, Neutral zone
- In the event of a power failure, multiple fail safe options are possible. During power failure, ICM can be selected to:
  Close ICM,
  Open ICM,
  Stay in the same position, as when power failure occurs
  Go to a specific ICM valve opening degree
- Hermetic magnetic motor
- Enclosure: IP67 ~ NEMA 6
- Approvals: CE, UL, CRN
- Connectors for easy installation and servicing
- ICAD 600A/1200A ensures an acurate feedback on the valve position.

© Danfoss | DCS (ms) | 2020.09

Technical data (actuator)

- *Materials*
  Housing
  Aluminium
  Top part of ICAD
  PBT thermo plastic
- *Weight*
  ICAD 600A: 2.64 lb (1.2 kg)
  ICAD 1200A: 4.19 lb (1.9 kg)
- *Temperature range (ambient)*
  –22°F/122°F (–30°C/+50°C)
- *Enclosure*
  IP 67 (~NEMA 6)
  Electrical connection
  Connection to ICAD is done via M12 connectors.
  ICAD has two M12 male connectors build-in:
  Power supply:
  4 poled M12 male connector
  Control signals:
  8 poled M12 male connector

ICAD can be delivered with (60 in. (1.5 m.)) or without cables with M12 female connectors:
Power Supply cable with 4 poled M12 female connector: 3 x ~22 AWG (3 x 0.34 mm^2)
Control cable with 8 poled M12 female connector: 7 x ~24 AWG (7 x 0.25 mm^2)

Cable set with M12 female connectors in other lengths are available. See the section "Spare parts and accessories".

Electrical data

Supply voltage is galvanic isolated from Input/Output.

Supply voltage:	24 V d.c., + 10% / -15%
Load:	ICAD 600A: 1.2 A
	ICAD 1200A: 2.0 A
Fail safe supply:	Min. 19 V d.c, max. 26.4 V d.c.
Load:	ICAD 600A: 1.2 A
	ICAD 1200A: 2.0 A
Analogue Input -	Current or Voltage
Current:	0/4-20 mA
Load:	200 Ω
Voltage:	0/2-10 V d.c
Load :	10 kΩ
Analogue Output:	0/4-20 mA
Load :	≤ 250 Ω

Digital Input - Digital ON/OFF input by means of volt-free contact (Signal/Telecom relays with gold-plated contacts recommended) – Voltage input used

ON:	Contact impedance < 50 Ω
OFF:	Contact impedance > 100 k Ω
Digital Output -	3 pcs. NPN transistor output
External supply:	5-24 V d.c. (Same supply as for ICAD can be used, but please note that the galvanically isolated system will then be spoiled)
Output load:	50 Ω
Load:	Max. 50 mA

Technical data (cont.)

Electrical data

Battery capacity:
For each open/closed cycle

	Speed Parameter i04	ICM 25	ICM 32	
ICAD 600A	Max. (i04 = 100)	5 mAh	5 mAh	
	Min. (i04 = 1)	467 mAh	533 mAh	
	Speed Parameter i04	**ICM 40**	**ICM 50**	**ICM 65**
ICAD 1200A	Max. (i04 = 100)	17 mAh	22 mAh	22 mAh
	Min. (i04 = 1)	1667 mAh	2167 mAh	2167 mAh

Cable connection
Two 1.5 m (60 in) cables pre-mounted

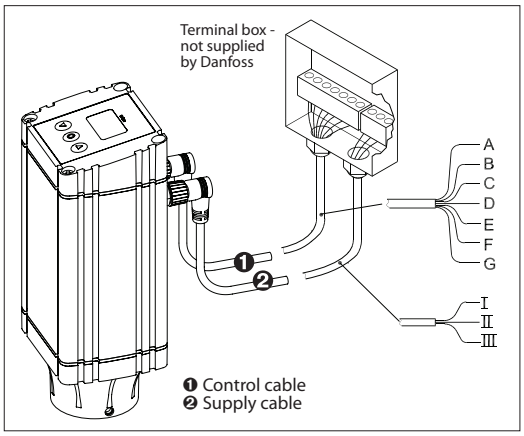

Ref.	Colour		Description	
A	Black	–	Common Alarm	Digital Ouput
B	Brown	–	ICM fully open	
C	Red	–	ICM fully closed	
D	Orange	–	GND ground	
E	Yellow	+	0/4 - 20 mA Input ***	Analogue In/Output
F	Green	+	0/2 - 10 V Input **	
G	Blue	+	0/4 - 20 mA Output ***	

I	Black	+	Fail safe supply Battery / UPS* 19 V d.c.
II	White	+	Supply voltage 24 V d.c.
III	Brown	–	

* Uninterruptable Power Supply
** Also used with D (GND, ground) for DI1 - Digital ON-OFF operation.
*** If Neutral zone / 3 point control is selected (parameter i02 = 3) then E and G are used as DI2 - Digital ON/OFF input.
Note: Colour code changed when compared to older colour wiring diagram.

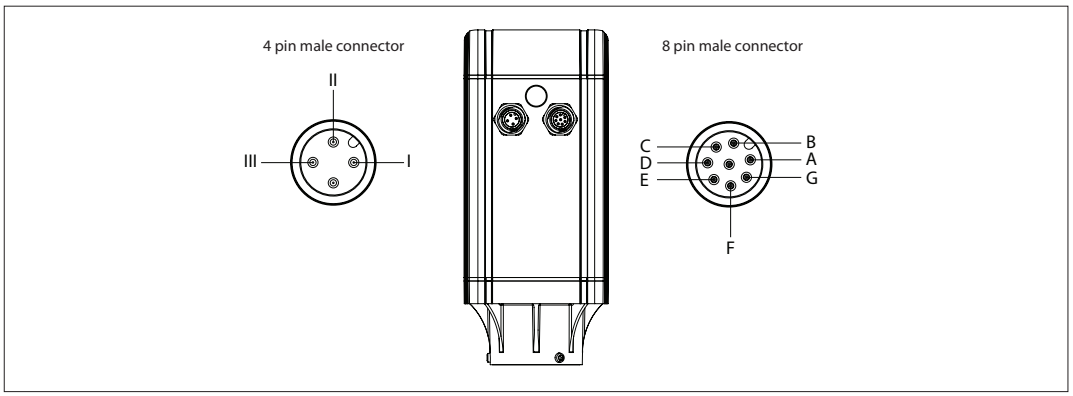

Approvals

CE according to 89/336 EEC (EMC)
Emission : EN61000-6-3
Immunity:EN61000-6-2

Function (actuator)

The design of ICAD is based on a digital stepper motor technology combined with an advanced MMI (Man Machine Interface), that gives excellent possibilities for having a high degree of flexibility with the same type of ICAD actuator.

At the ICAD display the Opening Degree (0-100 %) of the actual ICM valve installed can be continuously observed.

The advanced menu system will allow several parameters to be ajusted to obtain the required function.

© Danfoss | DCS (ms) | 2020.09

Function (actuator) (continued)

Many different parameters can be configurated, among these:

- Modulating, ON/OFF operation or Neutral zone / 3 point control
- Analog input
  0- 20 mA or 4-20 mA
  0-10 V or 2-10 V
- Digital Input
  ICAD can be configured to support one or two digital inputs.
  When using one digital input, 0-10 V can not be used at the same time.
  By using two digital inputs at Neutral zone / 3 point control, the analog input (0/2-10 V, 0/4-20 mA) and Analog Output (0/4-20 mA) can not be used at the same time.
- Analog output
  0- 20 mA or 4-20 mA
- Automatic or manual control
- Change of ICM valve speed
- Automatic calibration
- Multiple Fail Safe set-up options during power cut

For service all Input and Output signals can be recalled and observed from the ICAD display.

A password protection has been linked to the parameter of entering the correct ICM valve to avoid unintentional and non-authorised operation.

ICAD can manage and display different alarms.
If an alarm has been detected the display will alternate between showing: Actual alarm present and Opening Degree of ICM valve. If more than one alarm is active at the same time the alarm with the highest priority will take preference. The alarm with the highest priority is shown on the display.
All alarms will automatically reset when disappearing.

Previous alarms can be recalled for traceability and service purposes.

Any active alarm will activate the common digital alarm output.
All alarms will automatically reset when disappearing.

ICAD provides two digital output signals to 3rd party control equipment (e.g. PLC) indicating if the ICM valve is completely open or completely closed.

The hermetic magnetic motor coupling makes it easy to dismount the ICAD from ICM valve.

For further details on ICAD actuator please see the data sheet DKRCI.PD.HT0.B

Material specification

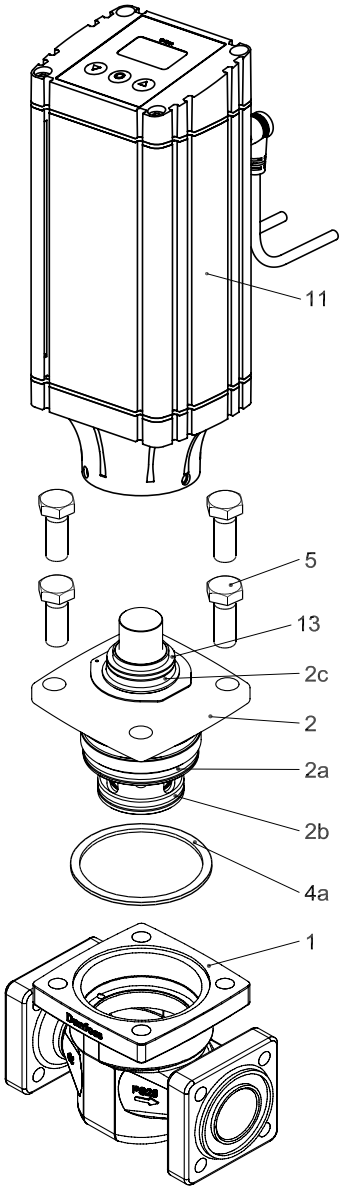

Bolt sizes (pos. 5)

Type	Screw
ICM 25	M12 × 30 A2-70 DIN 933
ICM 32	M14 × 35 A2-70 DIN 933
ICM 40	M14 × 35 A2-70 DIN 933
ICM 50	M16 × 40 A2-70 DIN 933
ICM 65	M16 × 40 A2-70 DIN 933

No.	Part	Material	EN	ASTM	JIS
1	Housing	Low temperature steel	G20Mn5QT, EN 10213-3	LCC, A352	SCPL1, G5151
2	Top cover	Low temperature steel	G20Mn5QT, EN 10213-3	LCC, A352	SCPL1, G5151
2a	O-ring	Cloroprene (Neoprene)			
2b	O-ring	Cloroprene (Neoprene)			
2c	O-ring	Cloroprene (Neoprene)			
3	Function module				
4	Gasket	Cloroprene (Neoprene)			
4a	Gasket	Fiber, non-asbestos			
5	Bolts	Stainless steel	A2-70, EN 1515-1	Grade B8 A320	A2-70, B 1054
11	Actuator				
12	O-ring	Cloroprene (Neoprene)			
13	O-ring	Cloroprene (Neoprene)			
14	Seat	High density polymer			

© Danfoss | DCS (ms) | 2020.09

ICM ordering

Type	C_v [gpm]	K_v [m³/h]	Code number
ICM 25 HMMR 1 in. incl. ICAD, control cable 9.84 ft and supply cable 9.84 ft.*	7.0	6	**148X0859**
ICM 32 HMMR 1¼ in. incl. ICAD, control cable 9.84 ft and supply cable 9.84 ft.*	10.4	9	**148X0861**
ICM 40 HMMR 1½ in. incl. ICAD, control cable 9.84 ft and supply cable 9.84 ft.*	17	15	**148X0862**
ICM 50 HMMR 2 in. incl. ICAD, control cable 9.84 ft and supply cable 9.84 ft.**	27	23	**148X0863**
ICM 65 HMMR 2½ in. incl. ICAD, control cable 9.84 ft and supply cable 9.84 ft.**	41	35	**148X0864**
ICM 25 HMMV 1 in. incl. ICAD, control cable 9.84 ft and supply cable 9.84 ft.*	13.9	12	**148X0865**
ICM 32 HMMV 1¼ in. incl. ICAD, control cable 9.84 ft and supply cable 9.84 ft.*	20	17	**148X0867**
ICM 40 HMMV 1½ in. incl. ICAD, control cable 9.84 ft and supply cable 9.84 ft.*	30	26	**148X0868**
ICM 50 HMMV 2 in. incl. ICAD, control cable 9.84 ft and supply cable 9.84 ft.**	46	40	**148X0869**
ICM 65 HMMV 2½ in. incl. ICAD, control cable 9.84 ft and supply cable 9.84 ft.**	81	70	**148X0892**

* Includes flange gaskets and flange bolts.
** Includes flange gaskets, flange bolts and flange nuts.

ICM accessories

ICAD-UPS

Description	Code no.
ICAD-UPS	**027H0182**

Multi-funtion tool

Description	Code no.
Multi-function tool for ICM 25-32	**027H0180**
Multi-function tool for ICM 40-65	**027H0181**

Cable for ICAD 600A / 1200A

Cable length (all female)	Code no.
4.92 ft. (1.5 m)	**027H0426**
9.84 ft. (3 m)	**027H0438**
32.81 ft. (10 m)	**027H0427**
49.21 ft. (15 m)	**027H0435**

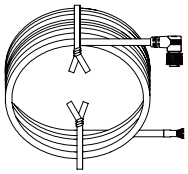

Connectors for ICAD 600A / 1200A

Connector type	Code no.
Two Female Connectors with screw terminals: - connector for power - connector for control signals	**027H0430**

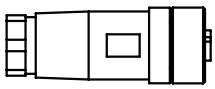

ICM accessories

Protection cap for ICAD 600A / 1200A

Description	Code no.
Protection cap	027H0431

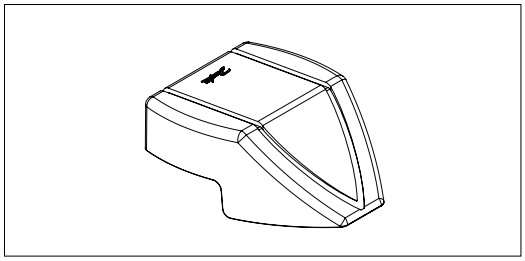

ICM dimensions and weights

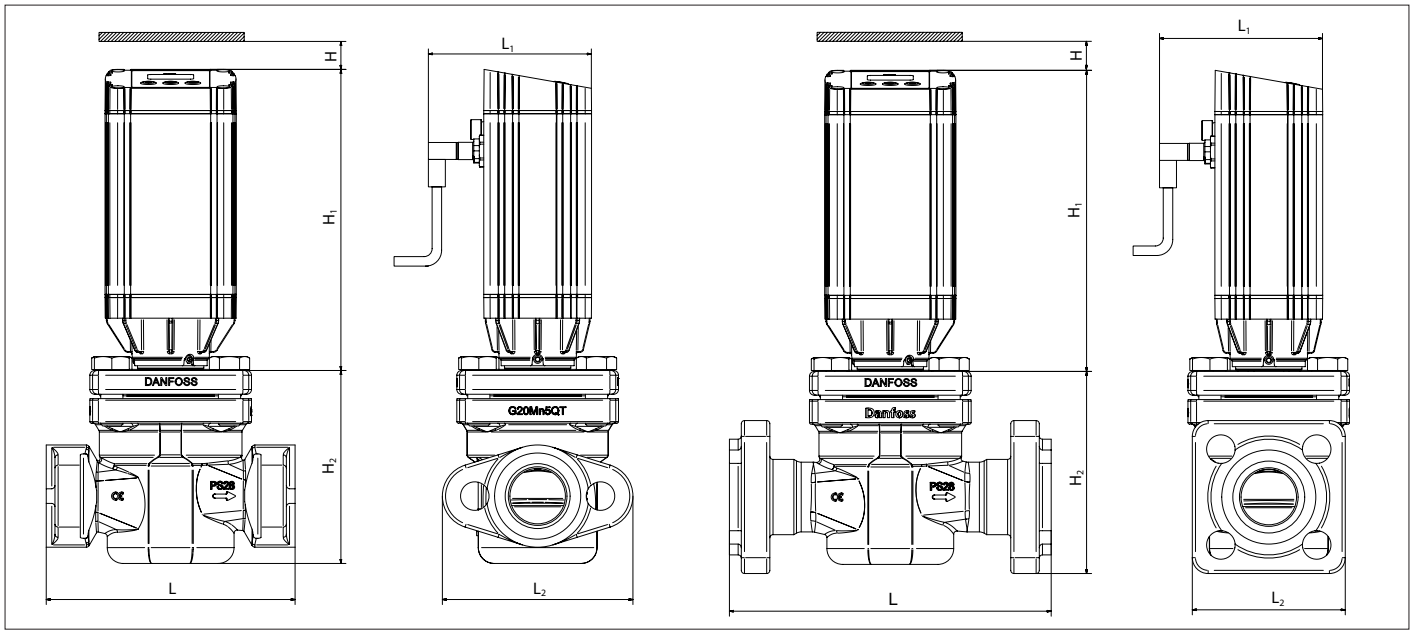

Valve size		L	L_1	L_2	H	H_1	H_2	Weight ICM incl. ICAD
25 HMMR(V) 1 in.	in.	6.2	4.0	4.7	1.6	7.7	4.1	11.9 lb
	mm	157	102	118.4	40	195	104.5	5.4 kg
32 HMMR(V) 1¼ in.	in.	6.2	4.0	4.7	1.6	7.7	4.8	15.6 lb
	mm	157	102	120.2	40	195	121.8	7.1 kg
40 HMMR(V) 1½ in.	in.	9.9	4.0	4.7	1.8	8.6	5.6	28.2 lb
	mm	251	102	120	45	219	143.1	12.8 kg
50 HMMR(V) 2 in.	in.	9.9	4.0	4.7	1.8	8.6	6.4	34.1 lb
	mm	251	102	120	45	219	162.1	15.5 kg
65 HMMR(V) 2½ in.	in.	9.9	4.0	5.7	1.8	8.6	7.7	50.8 lb
	mm	251.5	102	145	45	219	196.6	23.1 kg

© Danfoss | DCS (ms) | 2020.09

ICLX-S9A

ICLX capacities

ICLX with coils

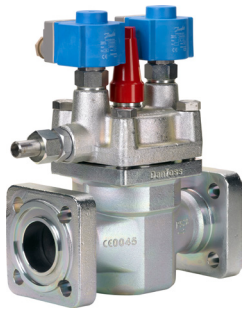

Type	Valve body size	C_v (USgal/min)	K_v (m^3/h)
ICLX 50 S9A	50	54.5	47
ICLX 65 S9A	65	95	82

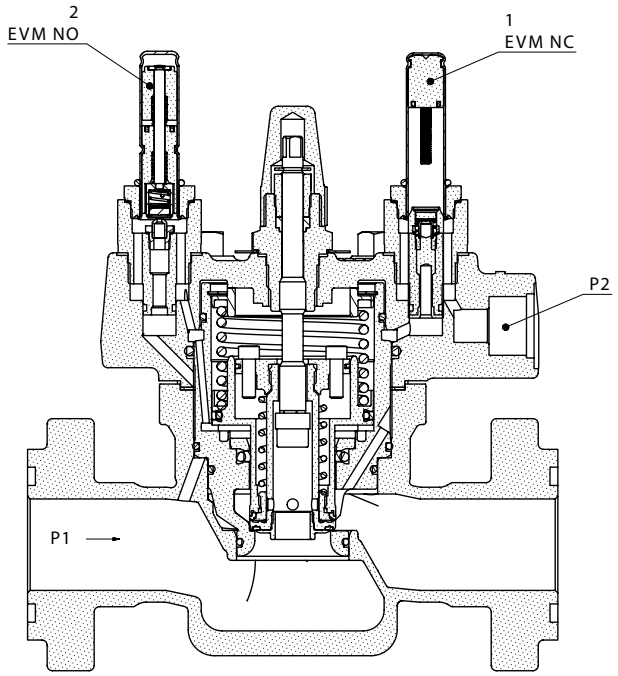

ICLX function

The ICLX valve is used as a shut-off valve in suction lines to open after a hot gas defrost.

The valve is a pilot controlled valve operated by an external pilot pressure source. This means that the valve can operate with no internal pressure differential (P_d) at all.

Low P_d is the key objective and makes the ICLX valve ideal for applications that are sensitive to differential pressure.

Though P_d is kept low, it can still be quantified, and must be considered when choosing valve size.

The main valve is provided with two pilot solenoid valves, as well as a nipple for connection to external pilot pressure.

The external pilot pressure line must be connected to a system pressure (p2) which is at least 1.5 bar (20 psi) higher than the inlet pressure (p1) of the valve. The difference between the external pilot pressure and the inlet pressure of the valve defines the maximum opening differential pressure (MOPD) of the ICLX.

The ICLX is kept open when power is applied to the coils placed on the EVM pilot solenoid valves in pos. 1 and pos. 2.

The ICLX closes and is kept closed when the coils on EVM pilot solenoid valves in pos. 1 and pos. 2 are de-energised.

The pilot solenoid valve (pos.1) allows external pilot pressure (p_2) to the bottom of the servo piston and opens the first step corresponding to approximately 10% of the valve capacity. At the same time the bleed spring will be compressed. This will start a pressure equalization of the inlet pressure (p_1) to the outlet pressure. When the differential pressure across the valve has fallen
to approximately 22 psig (1.5 bar) the spring will be strong enough to open the second step and open the valve to full capacity.
This way high-pressure pulsations, which would occur when opening for full capacity in one step, can be avoided.

ICLX must not be used in pipe systems where the differential pressure across the main valve in an open position can exceed 15 psig (1 bar), otherwise the step two on the valve will close.

© Danfoss | DCS (ms) | 2020.09

ICLX function
(continued)

Two step opening principle

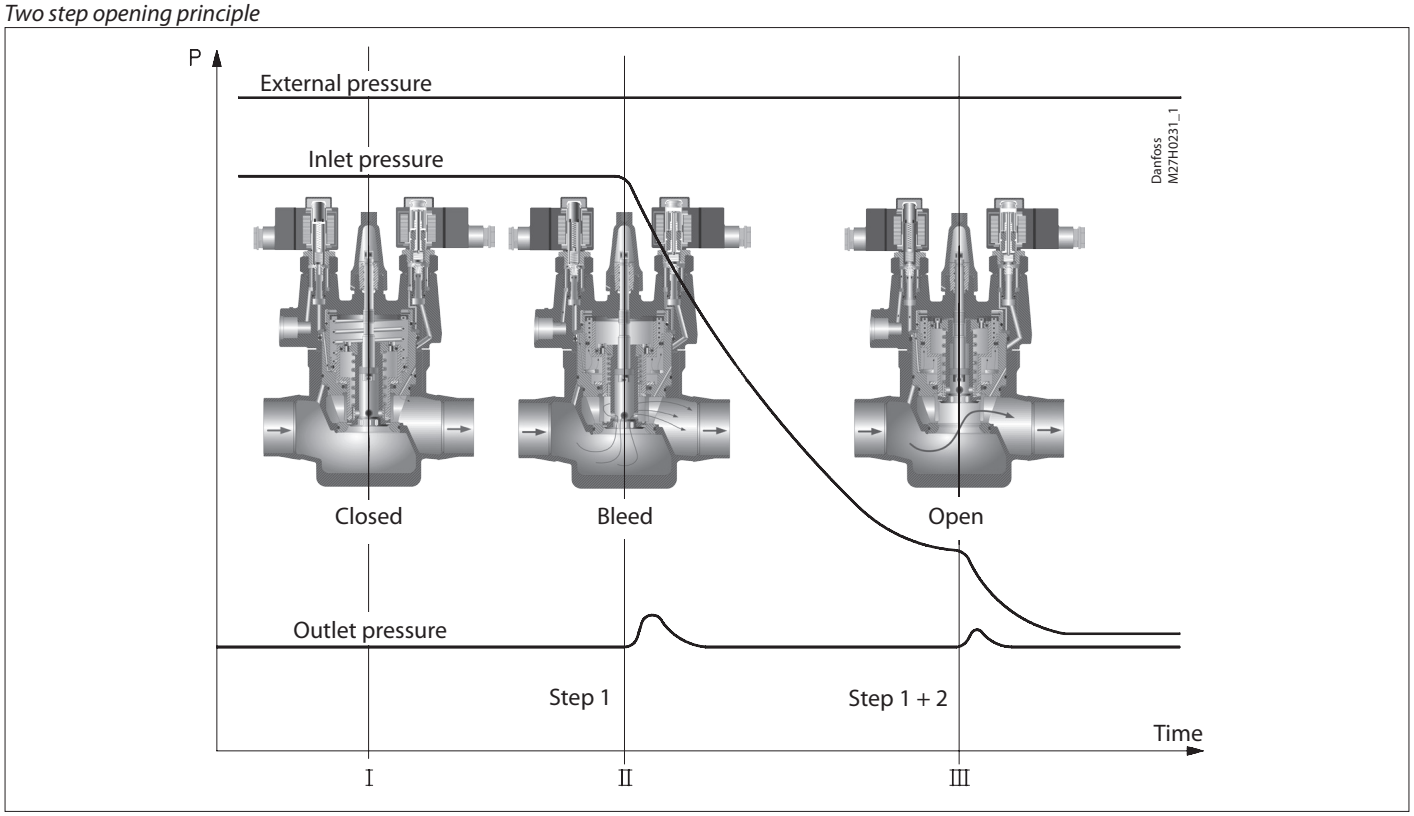

Important note for ICLX valves:
the ICLX valve is kept in its open position by hot gas. The hot gas condenses in the cold valve and creates liquid under the servo piston. When the pilot valves change status to close the ICLX, the pressure on the servo piston equalizes with the suction pressure through the pilot valve (pos. 2). This equalization takes time because condensed liquid is present in the valve.

The exact time taken from when the pilot valves change position to complete closing of the ICLX will depend on temperature, pressure, refrigerant and the size of the valve. Thus an exact closing time for the valves cannot be given but, in general, lower temperatures give longer closing times.

It is very important to take the closing times into consideration when a hot gas defrost is performed on evaporators. Steps must be taken to ensure that the hot gas supply valve is not opened before the ICLX in the suction line is completely closed. If the hot gas supply valve is opened before the ICLX in the suction line is closed, considerable energy will be lost and potentially dangerous situations might arise because of "liquid hammer". In ICLX valves, the spring-loaded second stage might be induced to hammer by gas and liquid being forced through the valve at $\Delta p > 1.5$ bar across the ICLX. The final result could be severe damage to the valve.

ICLX material specification

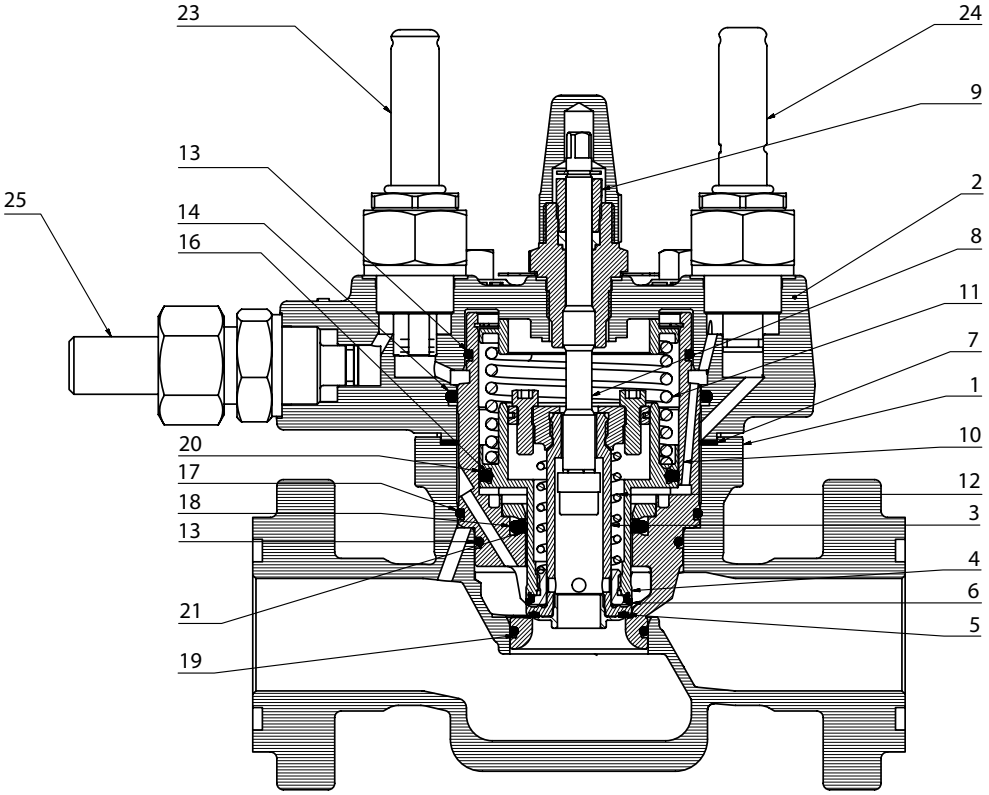

No.	Part	Material	EN	ASTM
1	Valve body	Low temperature steel	G20Mn5QT, EN 10213-3	LCC, A352
2	Top cover	ICLX 50-65: Low temperature steel	P285QH, EN 10222-4	LF2, A350
3	Main piston	Steel		
4	Bleed piston	Steel		
5	Seat plate main	PTFE		
6	Seat plate bleed	PTFE		
7	Gasket	Fiber, non-asbestos		
8	Spindle manual opener	Stainless steel		
9	Packing gland	Steel		
10	Insert	Steel		
11	Spring - main	Stainless steel		
12	Spring - bleed	Stainless steel		
13	O-ring	Chloroprene (neoprene)		
14	O-ring	Chloroprene (neoprene)		
16	O-ring	Chloroprene (neoprene)		
17	O-ring	Chloroprene (neoprene)		
18	O-ring	Chloroprene (neoprene)		
19	O-ring	Chloroprene (neoprene)		
20	Seal	PTFE		
21	Seal	PTFE		
22	Bolt	Stainless steel	A2-70 EN 1515-1	A2-70, B1054
23	EVM pilot NC			
24	EVM pilot NO			
25	External pressure inlet			

© Danfoss | DCS (ms) | 2020.09

ICLX ordering

Type	C_v [gpm]	K_v [m³/h]	Code number
ICLX 50 S9A 2 in. incl. connector*	54.5	47	**148X0896**
ICLX 65 S9A 2½ in. incl. connector*	95	82	**148X0897**

* Includes flange gaskets, flange bolts and flange nuts.

ICLX accessories

External pilot connection, ¼" female - NPT

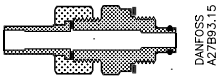

ICLX	Description	Code no.
50-65	External pilot connection (incl. damping orifice, D: 1.0 mm)	**027F1048**
50-65	External pilot connection (¼" FPT) (incl. damping orifice, D: 1.0 mm)	**027B2065**
50-65	Accessory bag with seal and o-ring for pilot valve	**027F0666**
50-65	Damping orifice for EVM. 10 pcs, (D: 1.0 mm)	**027F0664**

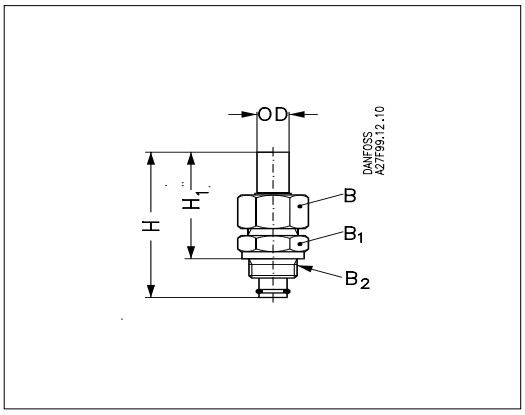

A damping orifice should be installed if the pressure difference between the low and the high pressure side is more than 6 bars.

			H	H_1	OD	B	B_1	B_2
Dimensions	in. mm		3.54 90	2.60 66	0.71 18	AF 32	AF 32	M 24 × 1.5

ICLX dimensions and weights

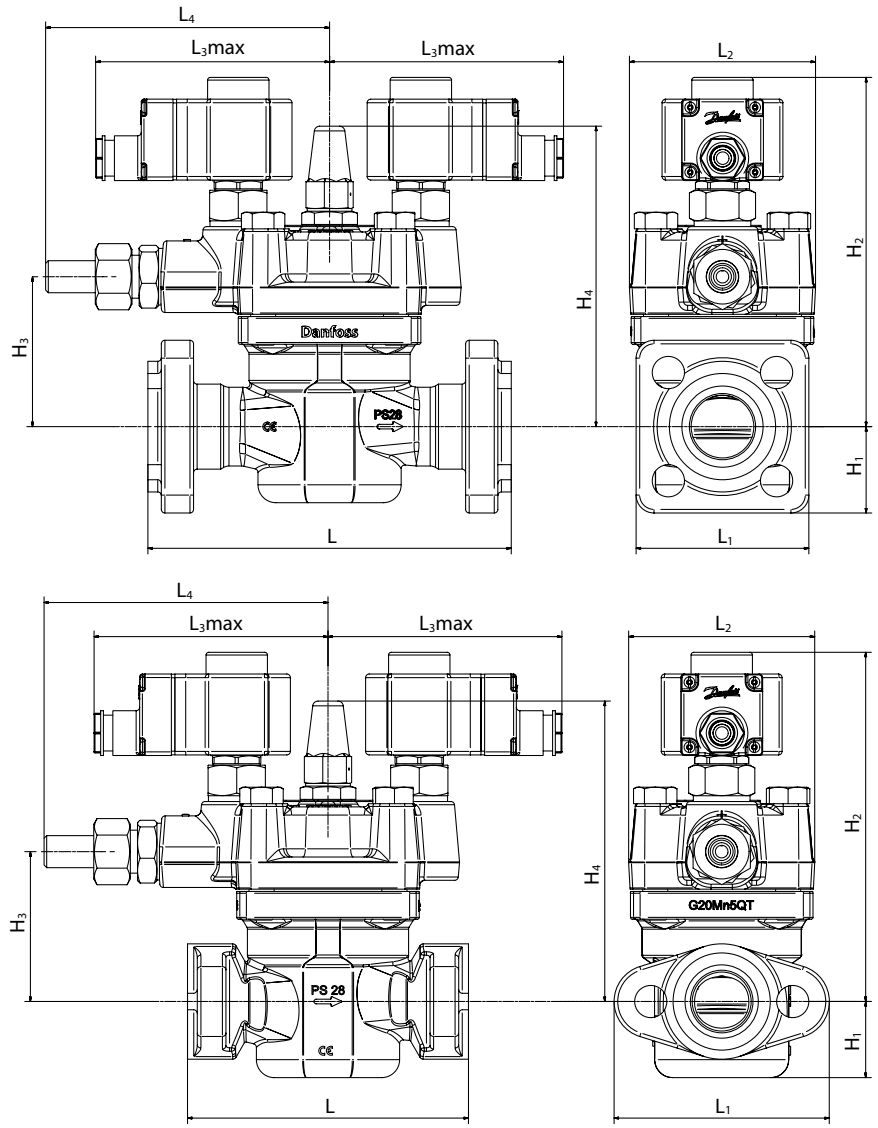

Valve size		L	L_1	L_2	L_3max		L_4	H_1	H_2	H_3	H_4	Weight
					10W	20W						
50 S9A 2 in.	in.	9.9	4.7	5.0	4.9	5.3	6.2	2.4	9.4	4.0	8.5	43.3 lb
	mm	251	120	126	125	135	157	61	240	102	217	19.7 kg
65 S9A 2½ in.	in.	9.9	5.7	5.6	4.9	5.3	6.4	2.9	10.1	4.8	9.2	59.0 lb
	mm	251.5	145	141	125	135	163	72.5	257	123	234	26.8 kg

© Danfoss | DCS (ms) | 2020.09

Danfoss can accept no responsibility for possible errors in catalogues, brochures and other printed material. Danfoss reserves the right to alter its products without notice. This also applies to products already on order provided that such alterations can be made without subsequential changes being necessary in specifications already agreed.
All trademarks in this material are property of the respective companies. Danfoss and the Danfoss logotype are trademarks of Danfoss A/S. All rights reserved.