Data sheet

Return temperature limiter type FJVR
Sensor and valve body

Application

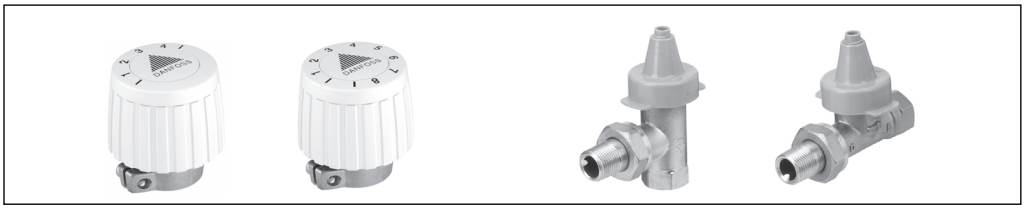

- FJVR is used in 2-pipe systems with pump
- self-acting
- P-function
- frost protection of radiator
- setting can be limited or locked

The return limiter type FJVR automatically controls the return temperature from radiators, convectors and floor heating pipes. In ventilation systems FJVR ensures a certain minimal circulation in the pipe system up to the heat exchanger.

System

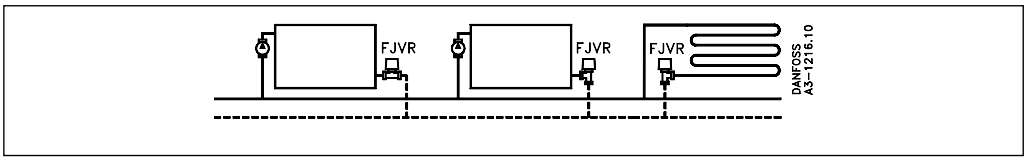

Ordering and data

Sensors

Type	Setting Range	Code no.
FJVR Return Temperature Limiter	10-80 °C	**003L1070**
	10-50 °C	**003L1040**

Valve bodies

Type	Code No.	Version	Connections		k_{vs} [2]	Max. pressure			Max. water temp.
			Inlet	Outlet [1]		Working	Different.[3]	Test	
FJVR 10	**003L1009**	Angle	R 3/8	R_p 3/8	0.27	10 bar	1 bar	16 bar	120 °C
	003L1010	Straight							
FJVR 15	**003L1013**	Angle	R 1/2	R_p 1/2	0.73				
	003L1014	Straight							

[1] Outlet connection is prepared for Danfoss compression fittings.

[2] The k_v-value indicates the water flow (Q) in m^3/h at a pressure drop (Δp) across the valve of 1 bar.

[3] The max. differential pressure indicates the limit for an optimal valve performance. To ensure quiet operation it is recommended to choose a pump which provides the correct pressure to circulate the required flow of water. In most systems a differential pressure of 0.1-0.3 bar is sufficient. The differential pressure may be reduced by using Danfoss differential pressure controls.

Spare parts

Product	Code No.[1]
Gland seal	**013U0070**

[1] delivered in boxes of 10 pcs.

Design

1. Thermostatic element
2. Sensor
3. Bellows
4. Setting dial
5. Spring
6. Pressure pin
7. O-ring gland
8. Valve cone
9. Limit rings
10. Valve body
12. Compression ring
13. Compression bush

Note:
Items 12 & 13 are accessories

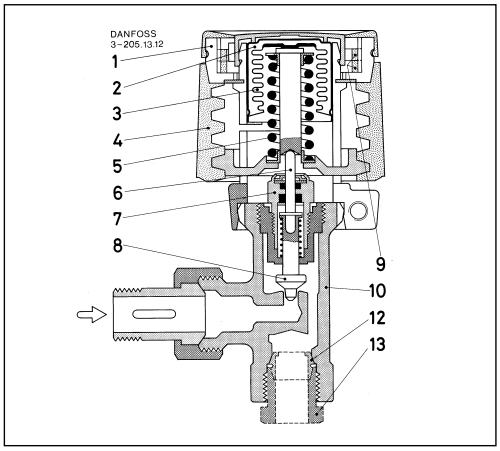

The return temperature limiter includes a thermostatic element type FJVR and a valve body type FJVR 10. The element and the valve body are ordered separately. The O-ring gland of the valve can be exchanged without draining down system.

Materials in contact with water

Valve body and other metal parts ..... Ms 58 brass
Pressure pin in gland seal ..... Chrome steel
O-ring ..... EPDM
Valve cone ..... NBR

Capacity

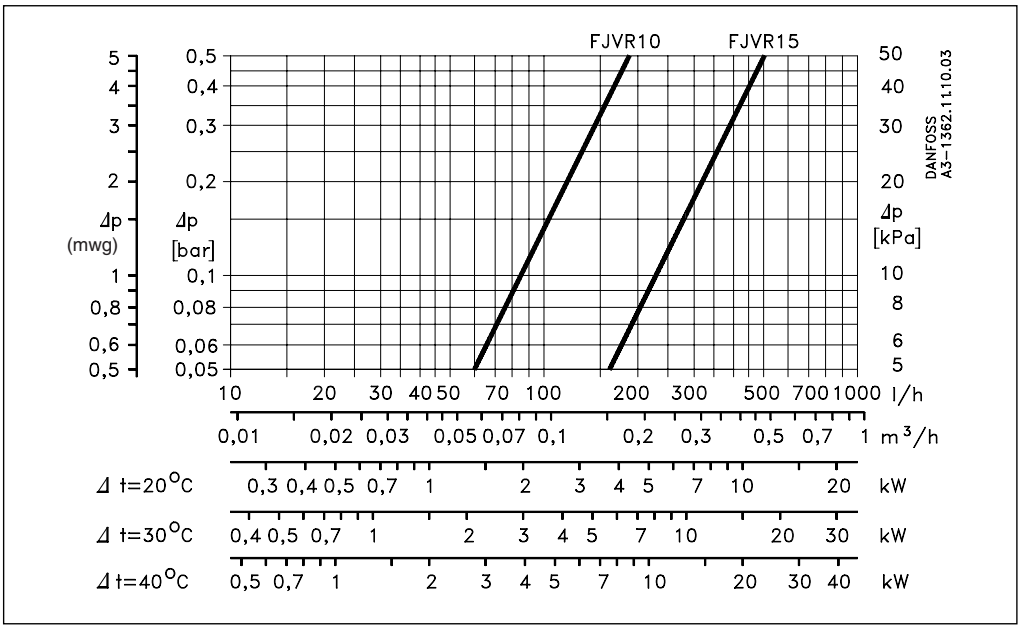

Mounting and setting

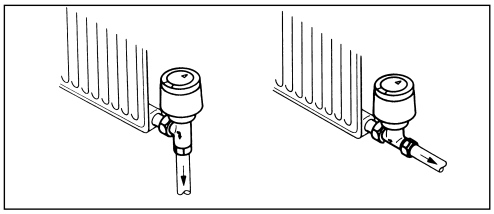

FJVR is mounted in the radiator outlet. The valve and sensor can be fitted in any position as long as flow direction is observed. During construction, the heat can be controlled by turning the slotted screw in the valve cap, prior to fitting the element.

⇩ = Frost protection setting

1	2	3	4					
10	20	30	40	45	50 °C			

⇩ = Frost protection setting

1	2	3	4	5	6	7	8
10	20	30	40	45	50	60	65	70 80 °C

Required return water temperature can be set by turning the dial. The scale figure indications appear as in the above illustration.

Dimensions

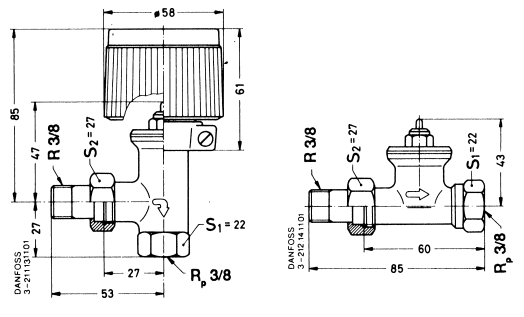

FJVR, 3/8" Angle and straight

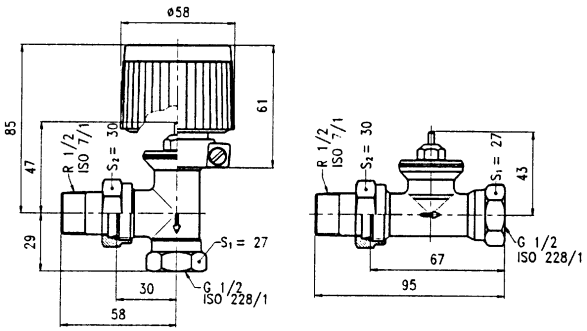

FJVR, 1/2" Angle and straight

Danfoss can accept no responsibility for possible errors in catalogues, brochures and other printed material. Danfoss reserves the right to alter its products without notice. This also applies to products already on order provided that such alterations can be made without subsequential changes being necessary in specifications already agreed.
All trademarks in this material are property of the respective companies. Danfoss and the Danfoss logotype are trademarks of Danfoss A/S. All rights reserved.