Electronic Ignition Units
EBI Series

General Data Sheet
For specific information on this product, please contact Danfoss Burner Components

Connection

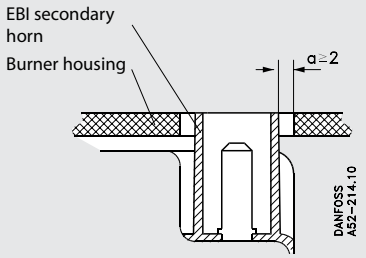

Primary connection, see Dimensions page 2

The EBI series is electronic ignition units for intermittent ignition between 1or 2 electrodes in oil or gas burners.
Low weight and small dimensions, due to high frequency operation, makes the EBI series very suitable for use in modern compact burners.

Connections with a plug on the primary side and bushes on the secondary side make installation and service quick and simple.

Applications and Features
- Reliable oil and gas burner ignition
- Complies with EMC standard EN 55014
- Easy installation and service

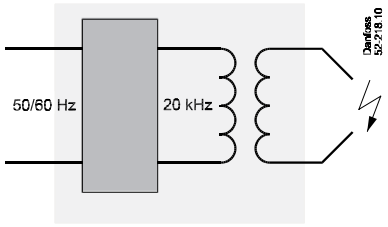



EBI
- Oil/gas burners in general
- 2-pole ignition
- Double insulated
- 33% ED at 60°C
- Top or front connection for secondary cables
- 230 V version

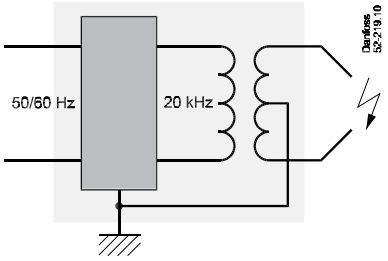



EBI M
- Oil/gas burners in general
- 2-pole ignition
- Secondary mid-point connected to earth/ frame
- 33% ED at 60°C
- Front connection for secondary cables
- 230 V and 120 V versions

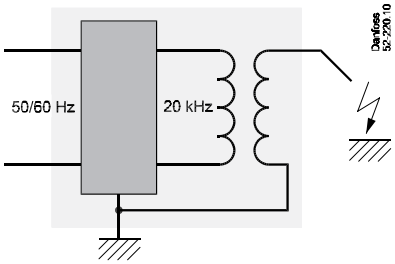



EBI 1P
- Gas burners
- 1-pole ignition between 1 electrode and frame
- 33% ED at 60°C
- Top or front connection for secondary cables
- 230 V and 120 V versions

Technical Data

Type	EBI	EBI M	EBI 1P
Primary connection	230 V - 0.25 A - 50/60 Hz - 60 VA		
		120 V - 0.5 A - 50/60 Hz - 60 VA version available	
Working range	187 - 255 V		
Main fuse	max. 10 A		
Secondary connection Short circuit current Frequency	15 kV amp. 40 mA (rms) 20 kHz	2 × 7.5 kV amp. 40 mA (rms) 20 kHz	11 kV amp. 50 mA (rms) 20 kHz
ED in 3 minutes (cutting in)	33% at 60°C		
Ambient temperature	–10°C to +60°C		
Storage temperature	–25°C to +85°C		
Enclosure	IP 40 (Not for secondary connections)		
EMC (Generic Standard)	Emission EN 55014-1 Immunity EN 55014-2		
Primary connection	2 × 0.75 mm^2 cable with special plug. Cables in 7 standard lengths from 180 mm to 630 mm 2 × 0.75 mm^2 cable with standard AMP connection*		
Secondary connections	2 × ∅4 mm plugs		1 × ∅4 mm plugs
Earth connection	EBI M and EBI 1 P		
Distance between electrodes	Recommended 2.5 mm to 5.0 mm		
Weight	300 g		

* For EBI and EBI 1P with secondary top connection

Dimensions and Connections

EBI	EBI M	EBI 1P	
a+b	a+b+c	b+c	a: Left terminal b: Right terminal c: Earth connection

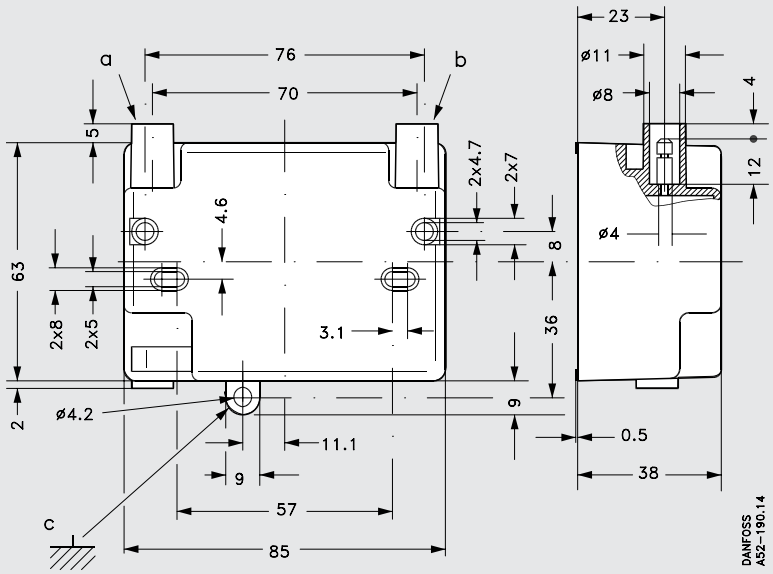

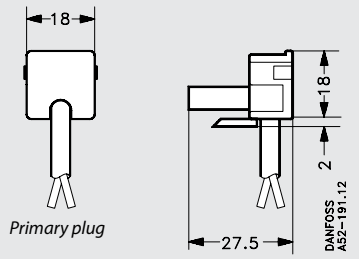

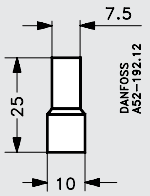

Bush, secondary

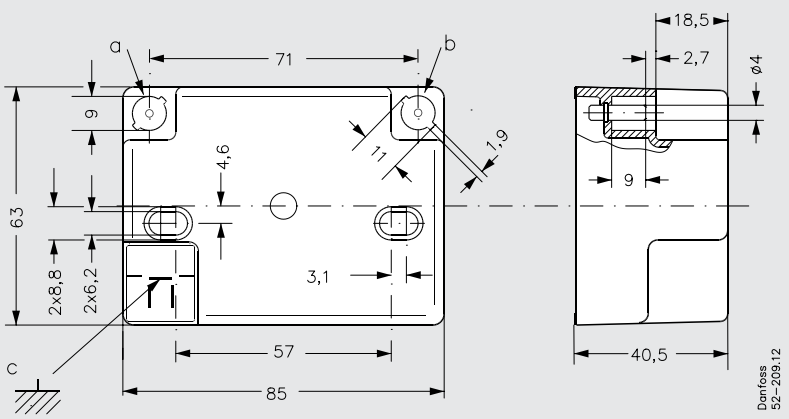

EBI and EBI 1P with secondary top connection

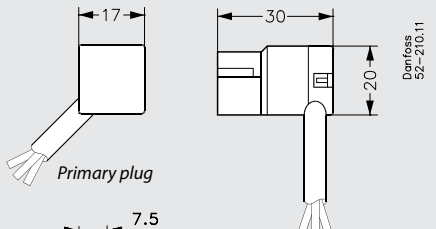

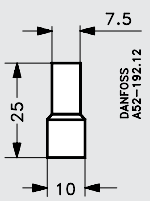

Bush, secondary

Danfoss can accept no responsibility for possible errors in catalogues, brochures and other printed material. Danfoss reserves the right to alter its products without notice. This also applies to products already on order provided that such alterations can be made without subsequential changes being necessary in specifications already agreed.
All trademarks in this material are property of the respective companies. Danfoss and the Danfoss logotype are trademarks of Danfoss A/S. All rights reserved.