ENGINEERING
TOMORROW

Data sheet

Actuators for three point control
AMV 25, AMV 35

Description



AMV electric actuators are used with, VRB, VRG, VF, VL valves with additional adapter (Code No. **065Z0311**, not supplied) and VFS 2 valves up to DN 50 diameter.

The actuator automatically adapts its stroke to valve end positions which reduces commissioning time. Optional auxiliary switches, feedback potentiometer and valve stem heater are available.

The actuator has some special features:
- The advanced design incorporates load related 'switch-off' to ensure that actuators and valves are not exposed to overload;
- Digitale feedback end position indication signal for valve end position is available by terminal 4 or 5;
- Low weight and robust;

Main data:
- Nominal voltage:
  - 24 VAC, 50 Hz/60 Hz
  - 230 VAC, 50 Hz/60 Hz
- Control input signal: 3 point
- Force: 450 N
- Stroke: 15 mm
- Speed: 15 s/mm
- Max. medium temperature: 150 °C
- End-position signals

Ordering

Actuators

Type	Supply voltage (VAC)	Code No.
AMV 25	230	**082G3024**
AMV 25	24	**082G3023**
AMV 35	230	**082G3021**
AMV 35	24	**082G3020**

Accessories

Type	Code No.
Additional switch (2×)	**082H7015**
Additional switch (2×) and potentiometer (10 kΩ)	**082H7016**
Additional switch (2×) and potentiometer (1 kΩ)	**082H7017**
Adapter for VFS 2 valves DN 15-50 (for media temp. over 150 °C)	**065Z7548**
Stem heater (for valves DN 15-50)	**065B2171**
Adapter for valves VRB/VRG/VF/VL (2009) DN 15-50	**065Z0311***
Clutch AMV(E) 25, AMV(E) 35	**003G6396**

** Need to be ordered separately.*

Technical data

Type		AMV 25	AMV 35
Power supply	V	24 AC, 230 AC; +10 to –15 %	
Power consumption	VA	2	7
Frequency	Hz	50/60	
Control input		3-point	
Closing force	N	1000	600
Max. stroke	mm	15	
Speed by 50 Hz (60 Hz)	s/mm	11 (8,8)	3 (2,4)
Max. medium temperature	°C	150 (200 - with adapter or mounted horizontally)	
Ambient temperature	°C	0 … 55	
Storage and transport temperature	°C	–40 … 70	
Grade of enclosure		IP 54	
Weight	kg	1,55	
CE - marking in accordance with standards		Low Voltage Directive 73/23/EEC, EMC-Directive 2006/95/EEC: EN 60730-1, EN 60730-2-14	

Installation

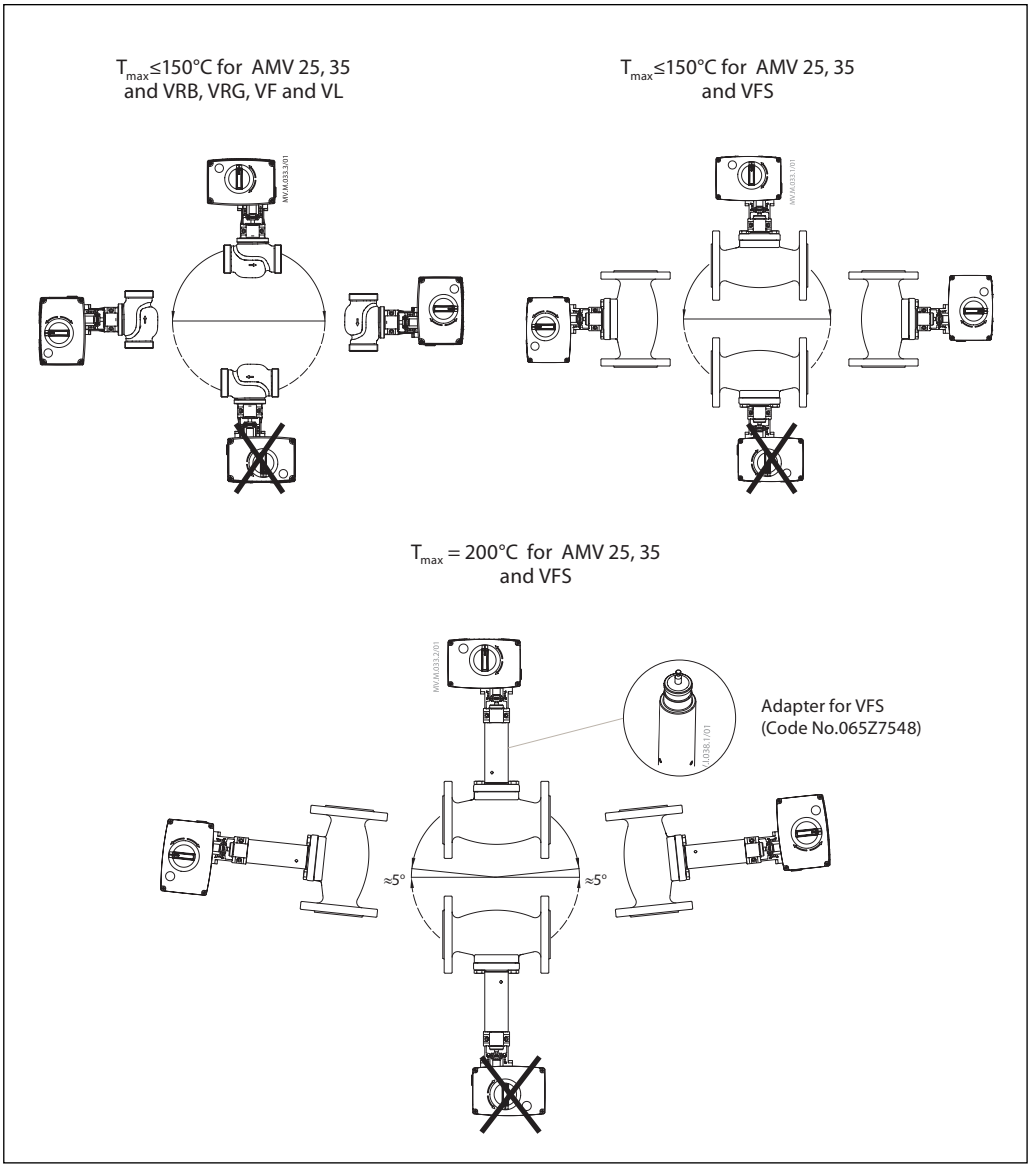

Mechanical

Use 4 mm Allan key (not part of actuator delivery) to mount actuator on the valve. Installation of the valve with the actuator is allowed in horizontal position or upwards. Installation downwards is not allowed.

The actuator must not be installed in an explosive atmosphere, at ambient temperature lower than 0 °C or at ambient temperature higher than 55 °C. It must not be subject to steam jets, water jets or dripping liquid as well.

Note: *the actuator may be rotated up to 360° with respect to the valve stem by loosening the retaining fixture. Once the actuator is placed, retighten the fixture.*

Electrical

Electrical connections can be accessed by removing the actuator cover. Two cable gland entries with thread (M20 x 1.5 and M16 x 1.5) are prepared for cable glands.

Note: *Cable and cable gland used must not compromise the actuator's IP rating, and must ensure the connectors are fully strain relieved. Please observe local rules and regulations as well.*

Disposal

The actuator must be dismantled and the elements sorted into various material groups before disposal.

© Danfoss | 2020.11

Wiring

230 Vac version:
Do not touch anything on the PCB! Lethal voltage!

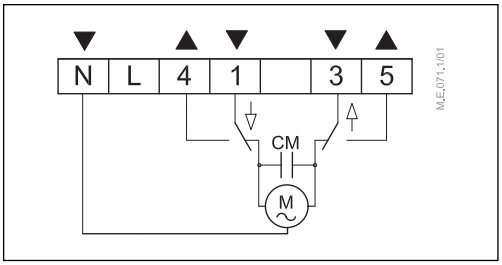

Terminals 1, 3:
Control voltage input from the controller.
Power supply 24 V~, 230 V~ (dependent on type)

Terminals 4, 5:
Output used for position indication or monitoring.

N
Neutral/Common (0 V)

Accessories

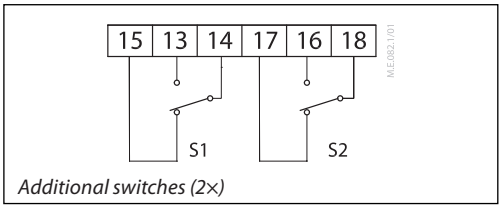

Additional switches (2×)

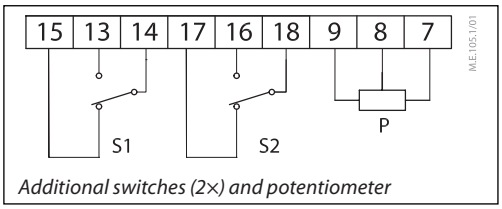

Additional switches (2×) and potentiometer

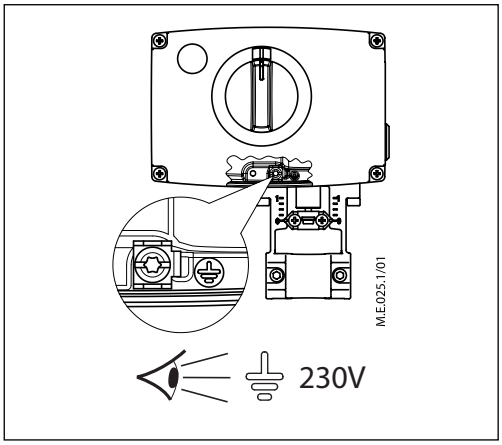

Commissioning

Complete the mechanical and electrical installation and perform the necessary checks and tests:
- Turn on the power.
- Set the appropriate control signal and check that the valve stem direction is correct for the application.

The unit is now fully commissioned.

Manual override

The manual override is achieved by turning the manual knob to the required position.
Observe the direction of rotation symbol.

- Disconnect control signals
- Press rubber button
- Adjust valve position using the control knob
- Set valve to closed position
- Restore control signals.

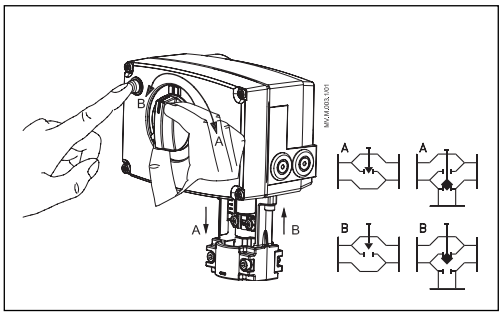

Data sheet **Actuators for three point control AMV 25, AMV 35**

Dimensions

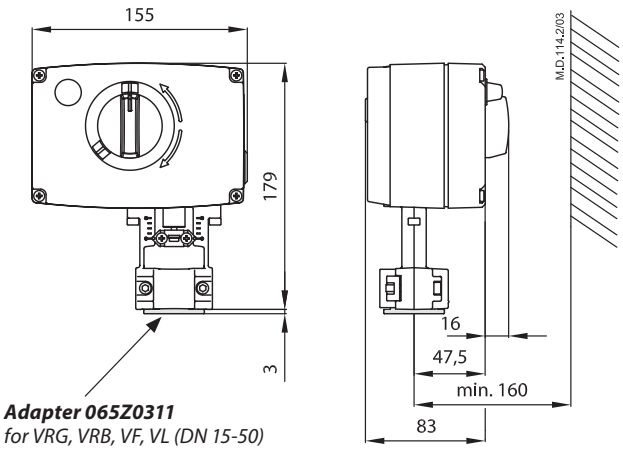

Adapter 065Z0311
for VRG, VRB, VF, VL (DN 15-50)

Adapter 065Z7548
for VFS (DN 15-50)
for media temperatures over 150 °C

Actuator - valve combinations

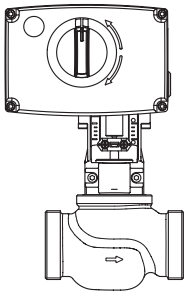

AMV 25, AMV 35 +
*Adapter (**065Z0311**)*
VRB 2, VRB 3 ext. thread (DN 15-50)
VRG 2, VRG 3 ext. thread (DN 15-50)

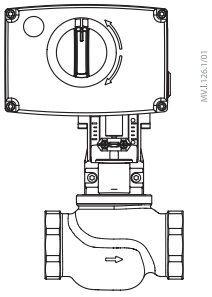

AMV 25, AMV 35 +
*Adapter (**065Z0311**)*
VRB 2, VRB 3 Int. thread
(DN 15-50)

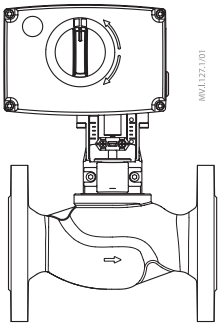

AMV 25, AMV 35 +
*Adapter (**065Z0311**)*
VF 2, VF 3 (DN 15-50)
VL 2, VL 3 (DN 15-50)

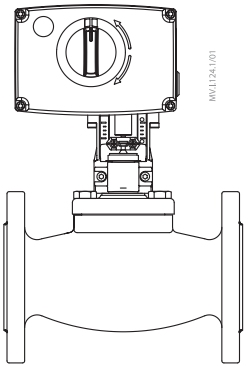

AMV 25, AMV 35 +
VFS 2 (DN 15-50)

Danfoss A/S
Heating Segment • danfoss.com • +45 7488 2222 • E-Mail: heating@danfoss.com

Danfoss can accept no responsibility for possible errors in catalogues, brochures and other printed material. Danfoss reserves the right to alter its products without notice. This also applies to products already on order provided that such alterations can be made without subsequential changes being necessary in specifications already agreed.
All trademarks in this material are property of the respective companies. Danfoss and all Danfoss logotypes are trademarks of Danfoss A/S. All rights reserved.

© Danfoss | DHS-SMDBT/SI | 2020.11