ENGINEERING
TOMORROW

Installation guide

Electronic operated valve

Type CCME

027R9843

Refrigerant: R290	Max. working pressure (PS/MWP): 90 bar (1305 psi) Max. test pressure (PT): 130 bar (1885 psi)	Max. ambient temperature: 60 °C (140 °F) Min. ambient temperature: -40 °C (-40 °F)

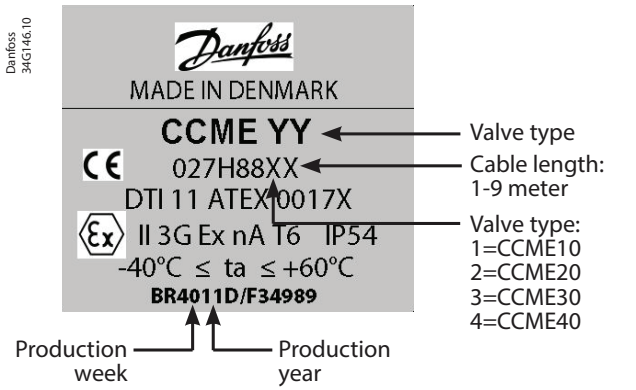

Application

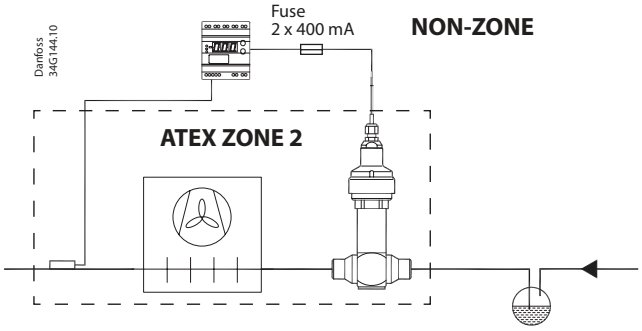

Mounting

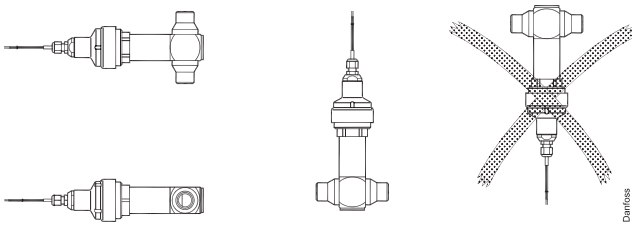

The valve has to be 100% open when mounting - as delivered. The valve must be supported with tube supporters either on the valve itself or on the tubes connected to the valve. The valve must not be exposed to any external influence like shock or punches.

A filter with a maximum mesh of 100 µm is required on the inlet line if the refrigerant contains particles above 100 µm.

Welding

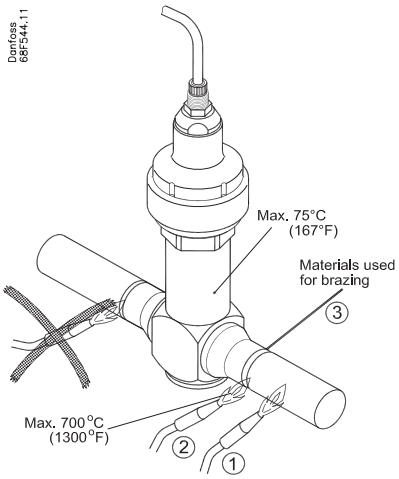

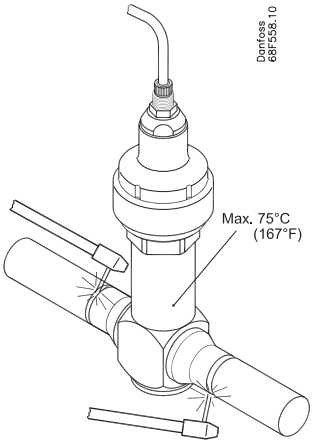

Only allowed when there is no explosion danger. Always ensure that there is no R290 present in the pipes and in the surroundings.

To braze the parts they must be cleaned mechanically or chemically, and after assembly add flux. Heat the parts by placing the heat most to the part with the best heat transfer. In this case the tube. When the parts are on brazing temperature add brazing material.

Materials used for brazing:
Flus: Metalli tenacity No. 5 Powder or Braze Tec special h paste.
Filler: Silver-Flo 55 (BS:AG 14/ DIN L-Ag55 Sn) or Silver-Flo 56 (AWS B Ag-7).
Filler metals containing Phosphor i.e. BS: CP 1/ DIN L-Ag 15P or BS: CP 3/ DIN L-Ag P7 must not be used.

Імпортер:ТОВ з ii "Данфосс ТОВ" 04080, Київ 80, п/с 168, Україна

Info for UK customers only : Danfoss Ltd., 22 Wycombe End, HP9 1NB, GB

Connection

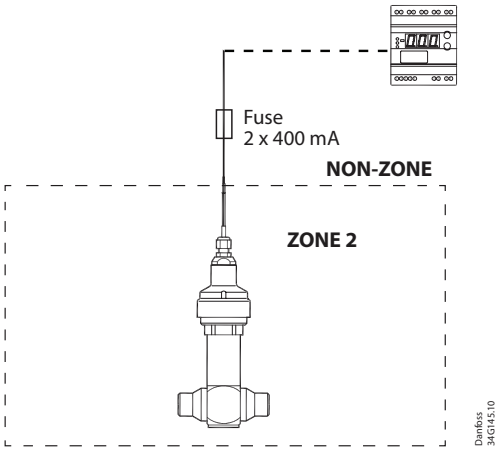

Stepper motor switch sequence

	STEP	Coil I		Coil II		
		Connection A	Connection B	Connection C	Connection D	
Closing	1	+	-	+	-	OPENING
	2	+	-	-	+	
	3	-	+	-	+	
	4	-	+	+	-	
	1	+	-	+	-	

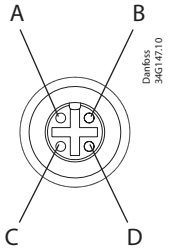

Electrical specifications

Parameter	CCME
Stepper motor type / Step mode	Bi-polar - permanent magnet / 2 phase full step
Phase resistance	52 Ω ±10 %
Nominal voltage	(Constant voltage drive) 12 V dc -4% – 15%, 150 steps/sec.
Phase current	(Using chopper drive) 100 mA RMS -4% – 15%,
Max. total power	Voltage / current drive: 5.5 / 1.3 W (UL: NEC class 2)
Electrical connection	4 wire 0.5 mm2 (0.02 in2), 0.3 m (1 ft) long cable
Fuses required on wires from connection A and C (Refer to the drawing above)	400 mA (each fuse) / IEC 60127

For further technical data please refer to the Data sheet

Warning!

Do not apply power directly to valve.

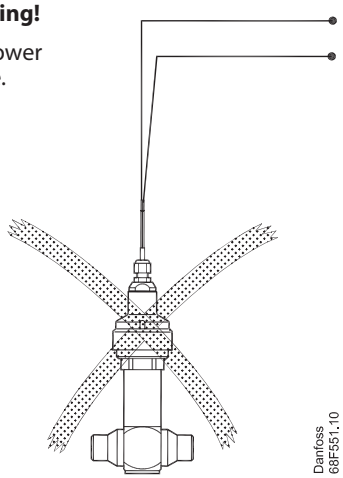

Warning!

Do not apply power to unassembled valve.

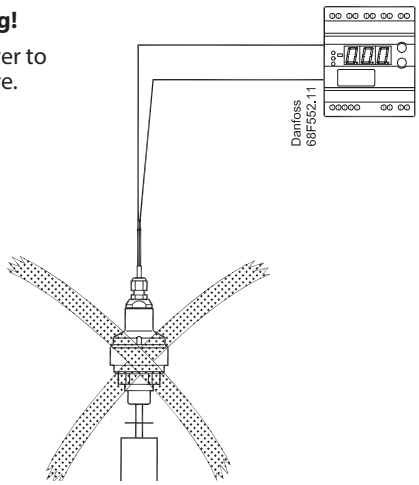

© Danfoss | Climate Solutions | 2022.06

ENGLISH

Installation

General remarks
For safety reasons, the installation must take place under the supervision of an authorised person taking account of local safety instructions, for flammable fluids, and advisories, e.g. EN 60079-14.
The handling of valves and their controls must be done only by staff trained in all technical aspects of their operation.
Before installation the pipes must be depressurised and purged (empty of its fluid) in order to avoid any danger to the operator.
In ATEX zone, check that the pipes are connected to the earth (grounded).. Do not use insulating pipes (PVC…)
- Check that the valves are suitable for the actual refrigerant.
- Check that the valves are suitable for| the actual zone.

Commission
Before putting valve into operation, check that:
- The working conditions are compatible with the details given on the identification label.
- All electrical connections have been properly made.
- Installation is tight after the assembly.

Maintenance
- Maintenance and repair work must be carried out by qualified personnel (ref. EN 60079-19)
- The pipe must be depressurized and purged (emptied of its fluid) in order to avoid any danger to the operator. If the installation has carried fluids which are dangerous in themselves if in contact with the outside atmosphere (inflammable, corrosive, toxic, explosive..)
- All operations must be performed using suitable protective (clothing, gloves, mask…).
- Where a control uses an external energy source, it is essential to isolate this source before any operation.

Safety
As well as the indications given in the preceding paragraphs of this notice, it is imperative that the following instructions be followed:
- This notice must be available on site where valves are installed.
- Personnel carrying out any intervention on the valve must be qualified for the task. In ATEX zone, the personnel must be educated in the risks of explosion, and should have received specific ATEX training (ref. EN 60079-14).
- In case the forwarded media would be an explosive atmosphere (deliberate internal explosive) or should it cause an explosive atmosphere in case of external leakage, the user must check the tightness of the installation after assembling, after a faulty operation or on a periodic basis undernormal conditions
- It is the responsibility of the user to check after the installation of the valve that there is no leakage. Especially in case of deliberate internal explosive atmospheres.
- Internal rules and legislation current in the country concerned with respect to health and safety at work must be applied and respected.
- The valve and its control must not undergo any modification without prior approval from our advisory service.

Danfoss is not responsible for any damage which may be caused by the use of parts, accessories or controls which are not original Danfoss parts
- Hot or cold parts of the valve which present a danger to the operator must be protected.
- In ATEX zone, the valve and its control must be cleaned regularly to avoid the accumulation of dust.
- In ATEX zone do not mount valves at open ends of lines.

Danfoss A/S
Climate Solutions • danfoss.com • +45 7488 2222

Any information, including, but not limited to information on selection of product, its application or use, product design, weight, dimensions, capacity or any other technical data in product manuals, catalogues descriptions, advertisements, etc. and whether made available in writing, orally, electronically, online or via download, shall be considered informative, and is only binding if and to the extent, explicit reference is made in a quotation or order confirmation. Danfoss cannot accept any responsibility for possible errors in catalogues, brochures, videos and other material.
Danfoss reserves the right to alter its products without notice. This also applies to products ordered but not delivered provided that such alterations can be made without changes to form, fit or function of the product.
All trademarks in this material are property of Danfoss A/S or Danfoss group companies. Danfoss and the Danfoss logo are trademarks of Danfoss A/S. All rights reserved.