ENGINEERING TOMORROW

Case story | VACON® AC drive

Bore Sea – RoFlex® vessel with energy efficient shaft generator configuration

How can we reduce fuel consumption, costs and emissions significantly? This question is troubling many ship owners now that freight rates are low and bunker costs are high. On M/V Bore Sea, a shaft generator combined with a VACON® AC drive is one key element in improving energy-efficiency.

As of January 2013, the International Maritime Organization (IMO) has made it mandatory for all ships over 400 GT to have a Ship Energy Efficiency Management Plan (SEEMP) containing measures for improving efficiency and thereby reducing fuel consumption and in turn CO_2 emissions. To meet this requirement, M/V Bore Sea – a RoFlex® vessel currently transporting Airbus components – incorporates several pioneering technological solutions. WE Tech Solutions Oy has developed a solution for optimizing the main propulsion machinery, which significantly improves the energy efficiency. The solution is based on VACON® AC drive technology.

Shaft generator with variable frequency

A shaft generator is coupled to the main engine shaft. The speed of the shaft generator varies with the engine speed. Due to the constant voltage and frequency requirements of the ship grid, the engine speed cannot be changed. This sets restrictions on any variation in engine speed and as a result on efficiency in a conventional configuration.

Cover photo courtesy of Bore Ltd.

The solution developed by WE Tech uses VACON® AC drive technology between the shaft generator and the ship's electrical network. This allows a large variation in the main engine speed while still delivering power with constant voltage and frequency to the ship's electrical network. This makes it possible to optimize the efficiency of the main engine and gives savings in fuel costs. The WE Drive™ solution can be used to improve the energy efficiency of any ship equipped with direct drive propulsion machinery combined with a shaft generator system, also called a Power Take Out (PTO) system.

A shaft generator with AC drive technology allows the use of power from the ship's electrical network to boost the main propulsion from the main engine, in case of dynamic traffic conditions at sea. This feature is referred to as PTI (Power Take In).

The shaft generator with VACON® AC drive technology features:

- 30% variation of shaft generator frequency and voltage while maintaining nominal voltage (VAC) and frequency (Hz) in the ship's electrical network
- Optimized PTO (Power Take Out) or PTI (Power Take In) operation of the shaft generator
- Continuous parallel operation between shaft generator and auxiliary generator sets
- Propulsion system optimization by running in combinator mode, i.e. by combining variable speed and variable pitch of the propeller.

The shaft generator on M/V Bore Sea is a synchronous machine. Thanks to AC drive technology, the shaft generator can be online alone or in parallel with auxiliary generating sets. "The VACON® AC drive unit is dimensioned according to the power generation requirements and the ship's electrical load in sailing mode," says Mårten Storbacka, Managing Director, WE Tech Solutions.

Improved efficiency brings environmental benefits

A shaft generator installed with a VACON® AC drive brings several benefits:

- Within a large variation in ship speed, the propeller and the main engine will operate close to their optimal duty point, which increases efficiency and significantly reduces fuel consumption
- Decreasing the propeller speed increases propeller efficiency, which further reduces fuel consumption and in consequence environmentally harmful emissions.
- Maintaining nominal voltage and frequency output from the shaft generator via a VACON® AC drive gives significant savings because there is no need for auxiliary generators

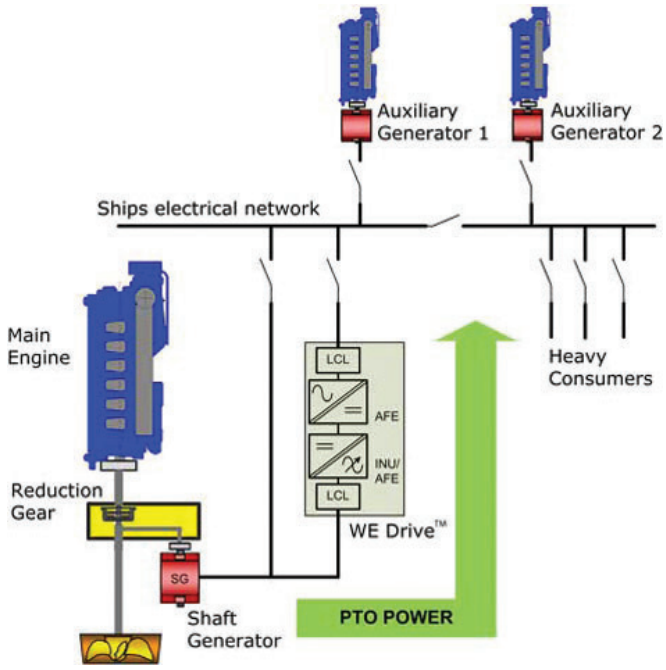

Diagram by Mårten Storbacka.

The main principles of the shaft generator configuration on M/V Bore Sea. VACON® Active Front End (AFE) units and LCL filters on the ship's electrical network – together with special application software – form the VACON® NXP Grid Converter.

"We are very pleased with the improved energy efficiency achieved through the various technical solutions used on M/V Bore Sea," *says Jörgen Mansnerus, VP Marine Management, Bore Ltd.*

"During the benchmarking period we saw that the business-as-usual annual fuel consumption by M/V Bore Sea would be around 5,600 tonnes. Data analyses verify that WE Tech Solutions' shaft generator with VACON® AC drives brings savings of approximately 10% in fuel costs, equivalent to some 550-600 tonnes. Given that fuel costs are about EUR 500 per tonne, the annual cost savings are significant, and on top of that CO_2 emissions are also cut by approximately 2,000 tonnes," Mr Mansnerus concludes.

VACON® Grid Converter

In addition to standard VACON® AC drive components such as Active Front End (AFE) and Inverter, a main building block in the WE Drive™ solution used on M/V Bore Sea is the VACON® NXP Grid Converter.

The VACON® NXP Grid Converter consists of VACON® AFE units and LCL filters on the ship's electrical network together with special application software. The package combining the AFE/Inverter with the VACON® NXP Grid Converter is installed between the shaft generator and the ship's electrical network. Power is delivered with constant voltage and frequency with the help of two auxiliary generators and the shaft generator for heavy consumers as shown in the figure.

With a variable engine speed, the shaft generator voltage and frequency vary. The AFE/INU hardware maintains a constant DC voltage to the Grid Converter. The VACON® NXP Grid Converter delivers the required voltage and frequency defined by the ship's electrical network and keeps it synchronized to the network. Together with the auxiliary generators and Power Management System, it features:

- Power balancing with frequency drooping
- Automatic voltage regulation
- Protection of itself and the consumers on the network in case of loss of generators, short circuit
- Reactive power compensation
- Power limiting
- Sharing of power based on demand
- Short term overload situations

The Grid Converter together with the Power Management System also allows power to flow bi-directionally – from the shaft generator to the ship's electrical network (PTO).

This case story was originally released before the merger of Vacon and Danfoss Power Electronics was fully completed on 15 May 2015. As a result, Vacon as a company brand no longer exists and contact persons mentioned in the story may have changed. Future case stories on VACON® products will be released on behalf of the new organization – Danfoss Drives – which is part of the Danfoss Group.

ENGINEERING
TOMORROW

Danfoss Drives

Danfoss Drives is a world leader in variable speed control of electric motors. We aim to prove to you that a better tomorrow is driven by drives. It is as simple and as ambitious as that.

We offer you unparalleled competitive edge through quality, application-optimized products targeting your needs – and a comprehensive range of product lifecycle services.

You can rely on us to share your goals. Striving for the best possible performance in your applications is our focus. We achieve this by providing the innovative products and application know-how required to optimize efficiency, enhance usability, and reduce complexity.

From supplying individual drive components to planning and delivering complete drive systems; our experts are ready to support you all the way.

We draw on decades of experience within industries that include:

- Chemical
- Cranes and Hoists
- Food and Beverage
- HVAC
- Lifts and Escalators
- Marine and Offshore
- Material Handling
- Mining and Minerals
- Oil and Gas
- Packaging
- Pulp and Paper
- Refrigeration
- Water and Wastewater
- Wind

You will find it easy to do business with us. Online, and locally in more than 50 countries, our experts are never far away, reacting fast when you need them.

Since 1968, we have been pioneers in the drives business. In 2014, Vacon and Danfoss merged, forming one of the largest companies in the industry. Our AC drives can adapt to any motor technology and we supply products in a power range from 0.18 kW to 5.3 MW.

VLT® | VACON®

Danfoss can accept no responsibility for possible errors in catalogues, brochures and other printed material. Danfoss reserves the right to alter its products without notice. This also applies to products already on order provided that such alterations can be made without subsequential changes being necessary in specifications already agreed.
All trademarks in this material are property of the respective companies. Danfoss and the Danfoss logotype are trademarks of Danfoss A/S. All rights reserved.

DKDD.PC.919.A1.02

© Copyright Danfoss Drives | 2016.03