ENGINEERING
TOMORROW

Data sheet

Energy Recovery Device
iSave 21 Plus / iSave 40

hpp.danfoss.com

Table of Contents

Contents

1. General information . . . 3
1.1 iSave 21 Plus . . . 3
1.2 iSave 40 . . . 4

2. Benefits . . . 4

3. Technical data . . . 5
3.1 iSave without motor . . . 5
3.2 iSave with IEC motor . . . 6
3.3 iSave with NEMA motor (can only be ordered through Danfoss US) . . . 7

4. Flow at different rpm . . . 8

5. Corrosion . . . 8
5.1 Operation . . . 8

6. Noise level . . . 9

7. Filtration . . . 9

8. iSave drawings . . . 10
8.1 Assembled iSave 21 Plus and iSave 40 without electric motor . . . 10
8.2 Assembled iSave 21 Plus and iSave 40 with IEC electric motor . . . 12
8.3 Assembled iSave 21 Plus and iSave 40 with NEMA motor . . . 18

9. Installation . . . 22

10. RO systems with an iSave . . . 23

11. Performance curves . . . 24
11.1 Performance and torque curves iSave 21 Plus . . . 24
11.2 Performance and torque curves iSave 40 . . . 26

12. Service . . . 28
12.1 Warranty . . . 28
12.2 Maintenance . . . 28
12.3 Repair . . . 28

© Danfoss | 2023.03

1. General information

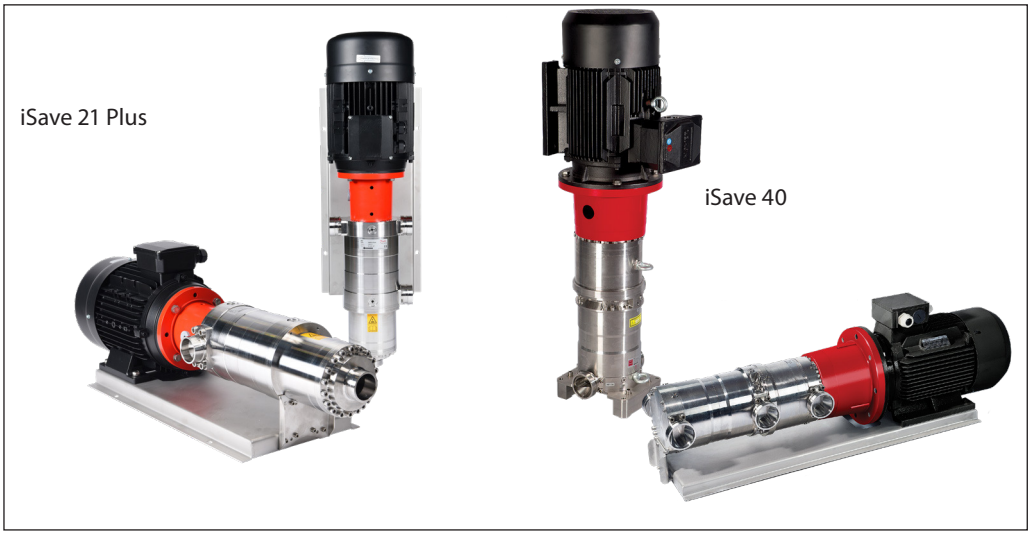

The iSave 21 Plus and iSave 40 consists of an isobaric pressure exchanger, a high-pressure positive displacement booster pump and an electric motor.

The isobaric pressure exchangers are based on the technology used in the Danfoss APP pumps, and the high-pressure booster pumps are based on the vane pump principle enabling a very light and compact design. The design of iSave 21 Plus and iSave 40 ensures lubrication of the moving parts by the fluid itself.

All parts included in the iSave 21 Plus and iSave 40 are designed to provide long service life with a constant high efficiency and minimum service required.

The vane pumps are fixed displacement pumps in which the flow is proportional to the number of revolutions of the driving shaft – enabling flow control.

The electric motor provides speed control of both the pressure exchanger and the high-pressure booster pump on the same shaft – preventing overspin/overflushing.

The iSaves need a VFD that allows the motor to apply a constant torque from low speed to maximum speed.

The sectional drawings below illustrate the main components of the iSave 21 Plus and iSave 40, respectively

1.1 iSave 21 Plus

1. 2″ Victaulic connections
2. Shaft
3. Low pressure shaft seal
4. Port flange
5. Port plate
6. Valve plate
7. Cylinder drum
8. Port flange
9. Port plate
10. Pins
11. Vanes
12. Port plate
13. Coupling
14. Adapter flange
15. Rotor
16. Stator
17. Port flange
18. Outlet flange

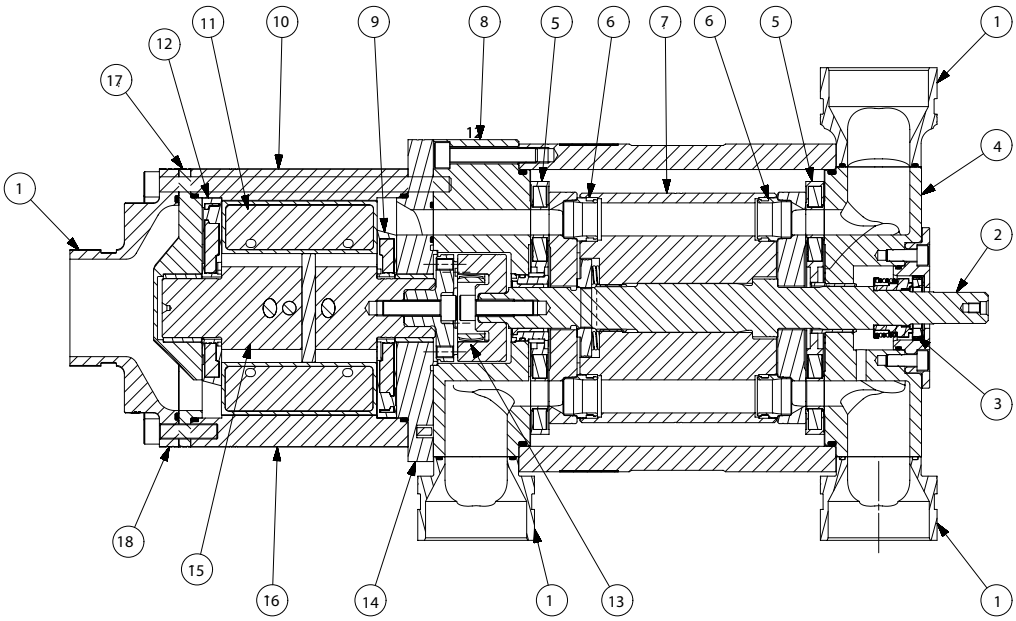

1. 3" Victaulic connections
2. Shaft
3. Low pressure shaft seal
4. Back flange
5. Port plate
6. Valve plate
7. Cylinder barrel
8. Outlet flange
9. Port flange PE side
10. Pins
11. Vanes
12.Side plate
13. Rotor element
14. Coupling
15. Rotor
16. Stator
17. Port flange motor side

1.2 iSave 40

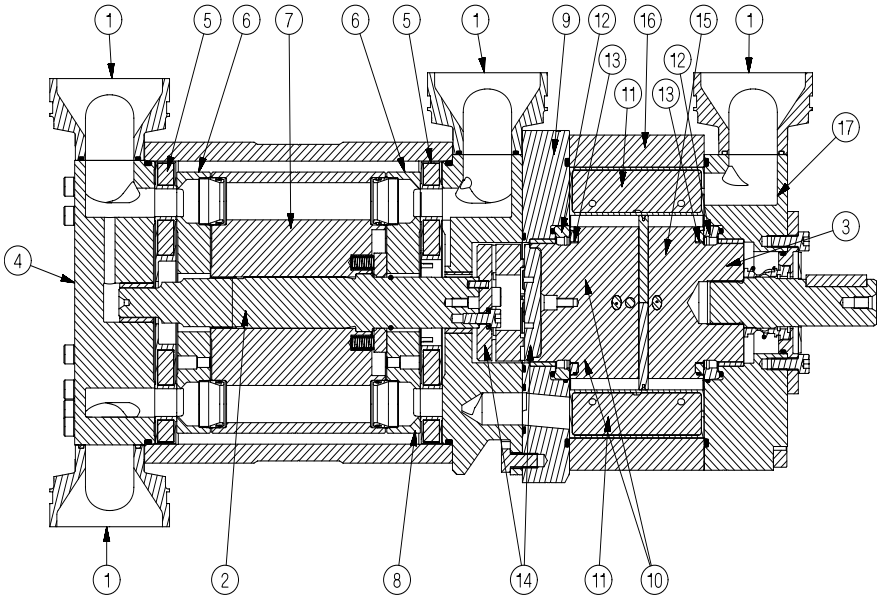

2. Benefits

- One of the smallest and lightest energy recovery devices on the market
- Few components
- High efficiency
- No need for high-pressure flow meters
- No expensive high-pressure mechanical seal
- No risk of over spin/over flushing
- Easy modular service
- All parts of the device are made of high corrosion-resistant materials e.g. Super Duplex

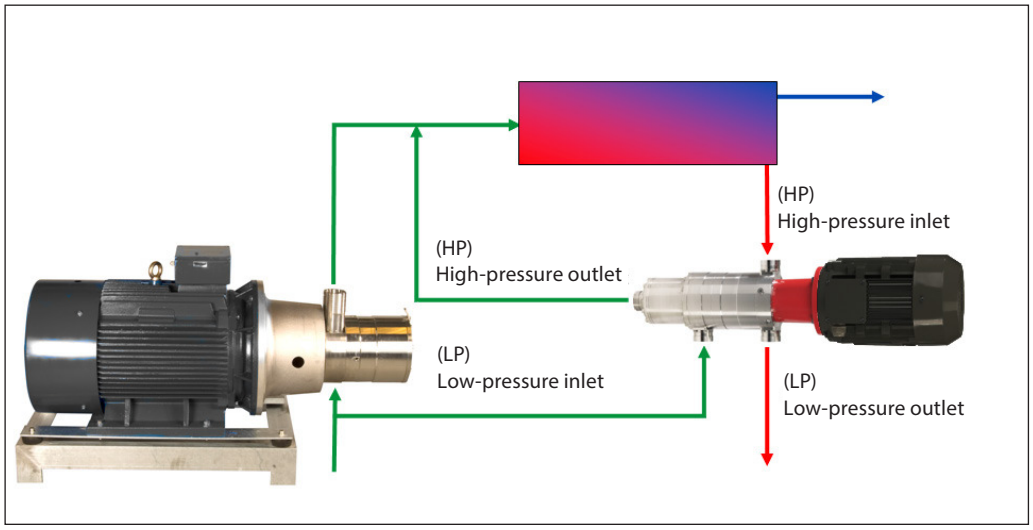

© Danfoss | 2023.03

3. Technical data

3.1 iSave without motor

iSave size		iSave 21 Plus	iSave 40
Code number		180F7015	180F7011
Geometric displacement	cm^3/rev	273	626
	in^3/rev	16.7	38.2
Pressure			
Differential pressure HP in - HP out max. [1]	bar	5	5
	psi	72.5	72.5
HP max. outlet pressure	barg	83	83
	psig	1200	1200
HP min. inlet pressure	barg	15	20
	psig	217	290
HP max. inlet pressure	barg	83	83
	psig	1200	1200
HP inlet min. pressure, intermittent [2] [3]	barg	3	3
	psig	44	44
LP inlet max. pressure	barg	5	5
	psig	72	72
LP inlet max. pressure intermittent [3]	barg	10	10
	psig	145	145
LP outlet min. pressure	barg	1	1
	psig	14.5	14.5
LP differential LP in - out at HP max. flow	bar	0.9	1.2
	psi	13	17.5
Speed			
Min. speed	rpm	500	600
Max. speed	rpm	1500	1200
Typical flow			
HP outlet flow range [4] at max. differential pressure	m^3/h	6-22	21-41
	gpm	26-96	92-180.5
Lubrication flow at 60 barg (871 psig) max.	m^3/h	0.4	0.8
	gpm	1.8	3.5
LP inlet max. flow	m^3/h	33	67
	gpm	145	295
Torque			
Torque at max. differential pressure operation [1]	Nm	49	102
	lbf-ft	36	75
Max. starting torque (stick/slip)	Nm	50	150
	lbf-ft	37	110
Media temperature [5]	°C	2-40	2-40
	°F	36-122	36-122
Ambient temperature	°C	0-50	0-50
	°F	32-104	32-104
Filtration requirements (nominal) [6]		5 micron melt-blow 85% efficient	
Salinity increase at membrane at 40% recovery rate		2-3 %	
Weight	kg	47	123
	lb	103	271

1) Continuous torque above max. differential pressure will reduce the lifetime of the iSave.
2) Pressure can reach this pressure level at start-up and permeate flush.
3) Intermittent pressure is acceptable for less than 10 minutes within a period of 6 hours.
4) Typical average flow at 60 bar.
5) Dependent on NaCl concentation.
6) Please see section 7. filtration.

3.2 iSave with IEC motor

iSave		iSave 21 Plus [A]	iSave 21 Plus	iSave 40	
Code number horizontal		180F7016	180F7017	180F7001	180F7004
Code number vertical		180F7016	180F7017	180F7003	180F7005
Motor size IEC version IEC 400 V, 50 Hz [1]	kW	5.5	7.5	11	15
	HP	7.5	10	15	20
Frame size	IEC	132 S	132 M	160 L	180 L
	pole	4	4	6	6
Motor data					
Nominal speed	rpm	1450	1450	970	970
Min. speed at 400 V	rpm	500	[2] 500	600	600
Max. speed at 400 V	rpm	1500	1500	[3] 1100	1200
Rated current at 400 V	A	11	15.2	22	30
Torque					
Motor torque at norminal speed [3] [4]	Nm	36	49	[5] 108	146
	lbf-ft	26.5	36	80	107.7
Motor torque at min. speed [3]	Nm	27	36	95	129
	lbf-ft	20	27	70	95
Motor ambient temperature, max.	°C	40	40	40	40
	°F	122	122	122	122
Motor insulation	Class	B	B	B	B
Motor degrees of protection	IP	55	55	55	55
Sound pressure level max. [6]	dB(A)	78	79	84	84
Weight	kg	105	116	254	305
	lb	231	255	560	672
Footprint (horizontal/vertical)	m^2	0.31	0.32	0.5/0.16	0.54/0.17
	$foot^2$	3.34	3.45	5.38/1.72	5.81/1.83

[A] Differential pressure HP in - HP out max. is limited to 3 bar [44 psi]

[1] Three-phase-asynchronous-motor according to DIN-IEC and VDE 0530 standards.
- Voltage and frequency according to IEC 38
- The motors are fitted with a rating plate in multi-tension: 380-420 V / 660-720 V, 50 Hz or 440-480 V, 60 Hz
- Tolerance ± 5% according to VDE 0530
- Standard coating according to IEC 60721-2-1

[2] If voltage is below 400 V we recommend to use another size of electric motor.
Please contact Danfoss High Pressure Pumps for further information.

[3] Torque load for iSave and motor see diagram on page 23 and 25.

[4] Due to inertia and stick-slip friction of the iSave, the torque may exceed the maximum allowable operation torque for the iSave when it is taken into use and/ or speed is ramped up from zero to maximum. A VFD or a soft starter must be used for ramp up.

[5] The starting torque must not exceed the values stated under "Max. starting torque (stick/slip)". The VFD must be able to deliver 140% start torque. The Danfoss VFD type FC 301 and FC 302 can be used. For advice on VFD settings, please consult our relevant guideline or contact Danfoss.

[6] A-weighted sound pressure level at 1 meter from the pump unit surfaces (reference box) acc. to EN ISO 20361 section 6.2. The noise measurements are performed acc. to EN ISO 3744:2010 on ERD with motor (motor-pump unit) at max. pressure and speed.

© Danfoss | 2023.03

3.3 iSave with NEMA motor (can only be ordered through Danfoss US)

iSave		iSave 21 Plus [A)]	iSave 21 Plus	iSave 40
Code number horizontal		180U0013	180U0052	180U0012
Code number vertical		180U0013	180U0052	180U0002
Motor size NEMA version [1)] High efficiency 460 V, 60 Hz	kW	7.5	11	15
	HP	10	15	20
Frame size	NEMA	215TC	254	286TC
	pole	4	4	6
Motor data				
Nominal speed	rpm	[2)] 1760	1765	1175
Min. speed continuous at 400 V	rpm	500	500	600
Max. speed continuous at 400 V	rpm	1500	1500	1200
Motor rated current 460 V	A	12.4	18	24.2
Torque				
Motor torque at norminal speed [3) 4)]	Nm	40	59.7	119
	(lbf-ft)	29.4	44	[5)] 88.2
Motor torque at min. speed [4)]	Nm	20	31	95
	(lbf-ft)	14.7	23	70
Motor ambient temperature, max. 3,300 feet above sea level	°C	40	40	40
	(°F)	122	122	122
Motor degrees of protection	IP	55	55	55
Sound pressure level max. [6)]	dB(A)	78	79[*)]	84
Weight	kg	152	206	324
	(lb)	335	454	715
Footprint (horizontal/vertical)	m^2	0.38	0.45/0.16	0.65/0.23
	$foot^2$	4.09	4.85/1.72	7.0/2.48

[A)] Differential pressure HP in - HP out max. is limited to 3 bar [44 psi]

[1)] Three-phase-asynchronous-motor according to L 1004-1 standards.
- Insulation class F, service factor 1.25.
- Fan-cooled TEFC (IC411). Voltage and frequency according to NEMA MG-1 part 12.
- The motors are fitted with a rating plate 230 / 460 V, 60 Hz.
- Plus or minus 10% of rated voltage, with rated frequency. Standard coating according to motor supplier specifications.

[2)] Max. speed for iSave 21 is 1500 rpm.

[3)] Torque load for iSave and motor see diagramme on page 23 and 25.

[4)] Due to inertia and stick-slip friction of the iSave, the torque may exceed the maximum allowable operation torque for the iSave when it is taken into use and/ or speed is ramped up from zero to maximum. A VFD or a soft starter must be used for ramp up.

[*)] Tested with IEC motor

[5)] The starting torque must not exceed the values stated under "Max. starting torque (stick/slip)". The VFD must be able to deliver 140% start torque. The Danfoss VFD type FC 301 and FC 302 can be used. For advice on VFD settings, please consult our relevant guideline or contact Danfoss.

[6)] A-weighted sound pressure level at 1 meter from the pump unit surfaces (reference box) acc. to EN ISO 20361 section 6.2. The noise measurements are performed acc. to EN ISO 3744:2010 on ERD with motor (motor-pump unit) at max. pressure and speed.

4. Flow at different rpm

The diagram shows that the HP flow can be changed by changing the rotation speed of the iSave. The flow/rpm ratio is constant, the required flow is obtainable by changing the rotation speed to a required value.

For accurate data please use our selection tool which is available on our website: www.isave.danfoss.com

The iSave is delivered with a 3.1 performance certificate according to EN10204.

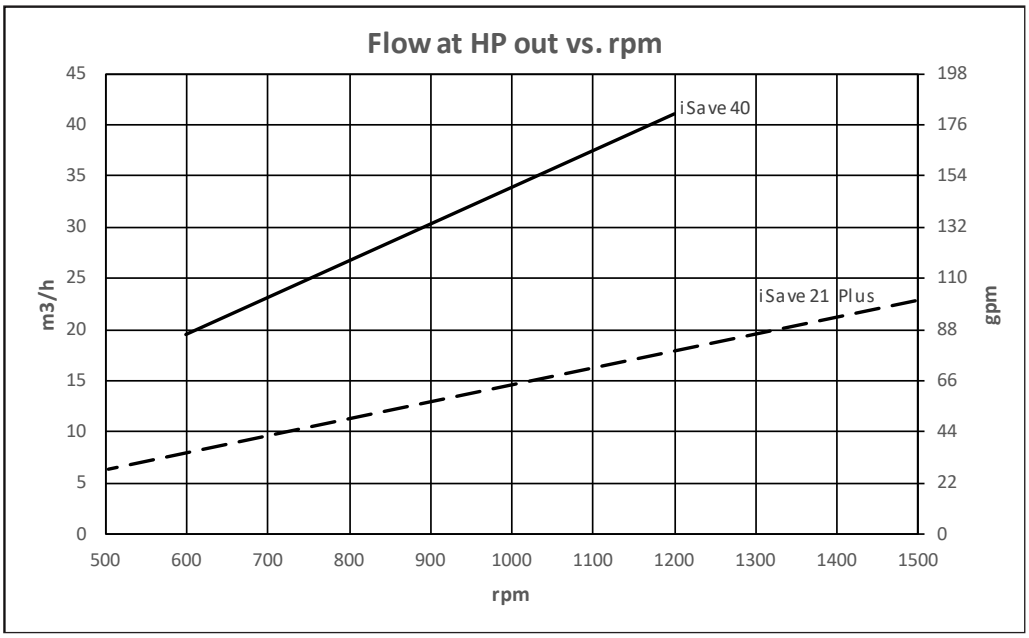

5. Corrosion

5.1 Operation

The chart below illustrates the corrosive resistance of different types of stainless steel related to NaCl concentration and temperature. All critical parts of the iSave is made of Super Duplex 1.4410/UNS 32 750 or Duplex 1.4462/UNS 32803.
Always flush the iSave with fresh water at operation stop in order to minimize the risk of crevice corrosion.

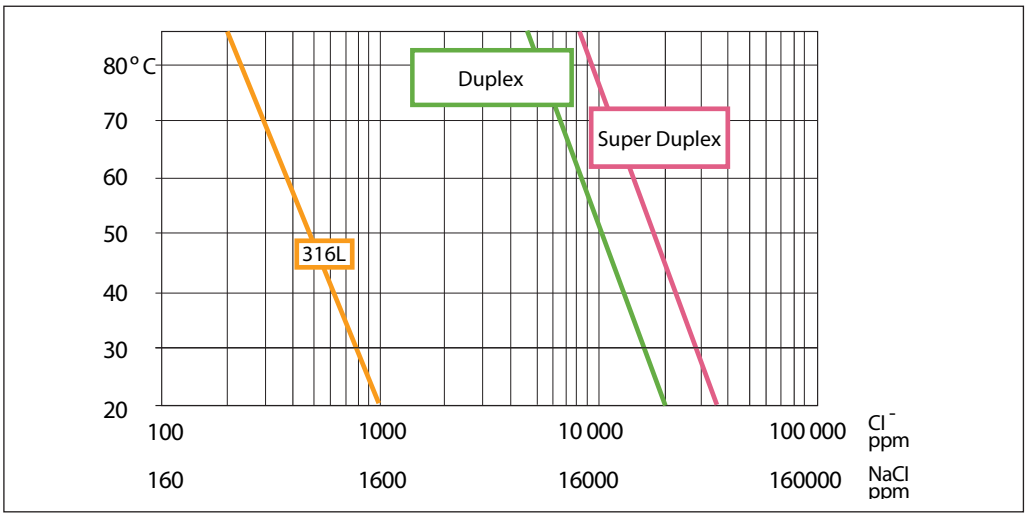

© Danfoss | 2023.03

6. Noise level

The noise level for the iSaves is measured at max. speed, a pressure of 80 barg and a booster pressure of 5 bar. Since the iSave is mounted on a bell housing and electric motor, the noise level can only be determined for the complete unit (system).

It is therefore important that a horizontal iSave unit is mounted correctly on a frame with dampeners to minimize vibrations and noise. We recommend to mount a vertical iSave directly to the floor with bolts. It is also strongly recommended to use high-pressure flexible hoses between the hard piping in the RO-plant and the iSave or to use multiple connections with Victaulic clamps.

The noise level is influenced by:

Speed:

- High rpm makes more fluid/structure-borne pulsations/vibrations than low rpm due to higher frequency.

Pressure:

- High pressure makes more noise than low pressure.

Mounting:

- Rigid mounting makes more noise than flexible mounting due to structure-borne vibrations.

Connections to iSave:

- Pipes connected directly to the iSave make more noise than flexible hoses due to structure-borne vibrations.
- Variable frequency drives (VFD): Motors regulated by VFDs can increase noise level if the VFD does not have the right settings.

Noise level (dB(A) measured for the iSave 21 Plus and 40 at different speed and system pressure. Booster pressure 3 bar.

iSave 21 Plus

rpm \ barg/psig	20/290	60/870	80/1160
500	60	62	68
1000	69	72	74
1500	77	78	78

iSave 40

rpm \ barg/psig	30/435	60/870	80/1160
800	73	77	78
1000	76	79	81
1200	78	82	84

7. Filtration

It is important that the incoming water is filtered properly to ensure optimum service life. A true graded density, melt-blown depth filter cartridge rated at 5 µm nominal, with a proven efficiency of min. 85% is therefore recommended.

It is important with selection of a proper filter housing to ensure good cartridge end sealing. If there is a high risk of water by-pass it is recommended to use a second stage filter solution.

As the various filters on the market differ greatly, Danfoss High Pressure Pumps recommends using cartridges with consistent, reliable performance and high efficiency and where fibres are blown continuously onto a central support core. High Pressure Pumps does not recommend cartridges requiring any type of binders or resins.
Filters can be purchased from Danfoss High Pressure Pumps. Please see section 10.0, “RO systems with an iSave”, for installation of filter. For more information on the importance of proper filtration, please consult our publication “Filtration” (code number 521B1009), which also will provide you with an explanation of filtration definitions and a guidance on how to select the right filter.

8. iSave drawings

8.1 Assembled iSave 21 Plus and iSave 40 without electric motor

iSave 21 Plus

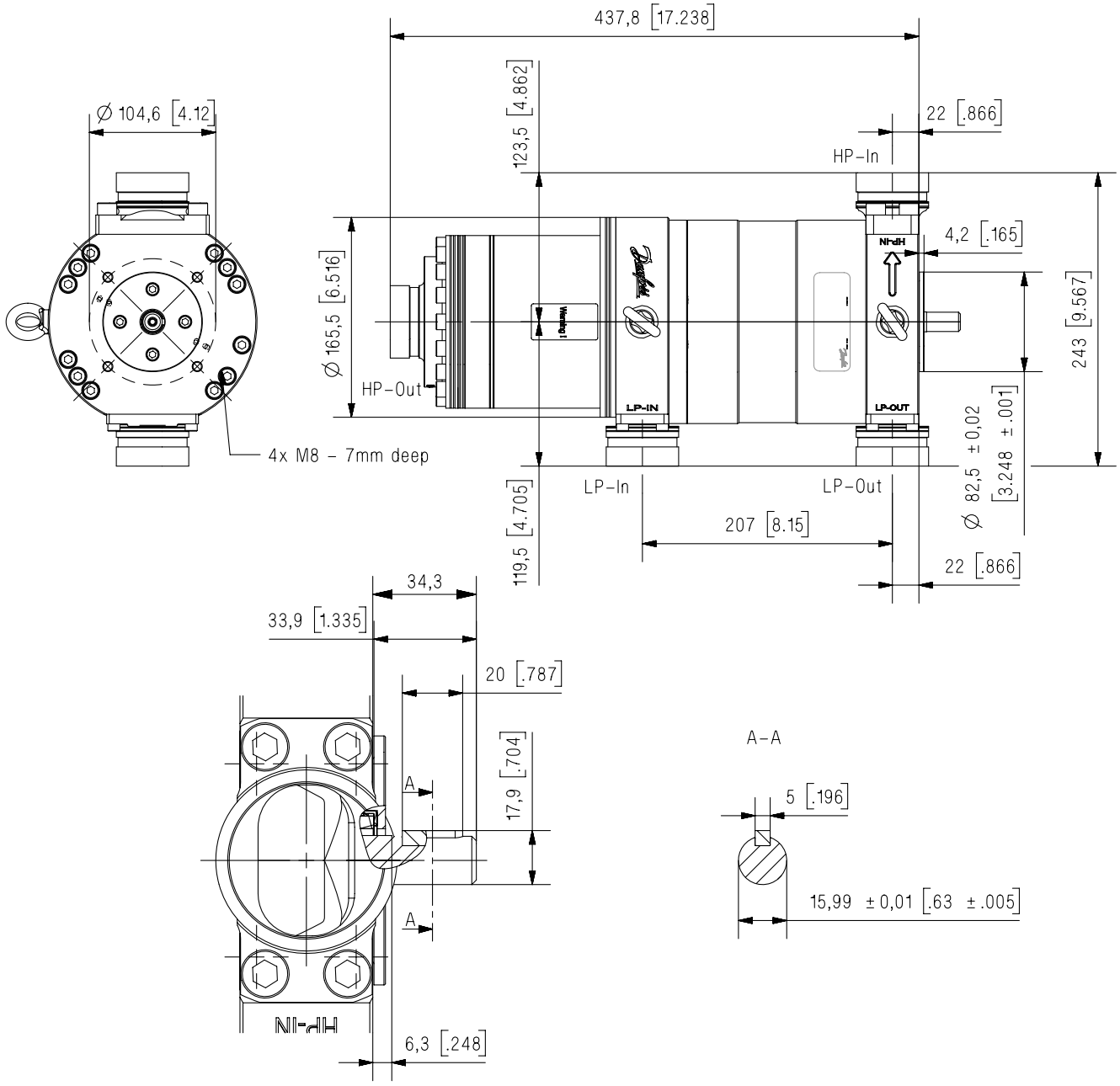

Discription	iSave 21 Plus
Parrallel key, DIN 6885	5 x 5 x 20 mm 0.20 x 0.20 x 0.78 inch
HP-connection	2" Victaulic
LP-connection	2" Victaulic

Dimensions without tolerances acc. To ISO 2768-1 designation C.

© Danfoss | 2023.03

iSave 40

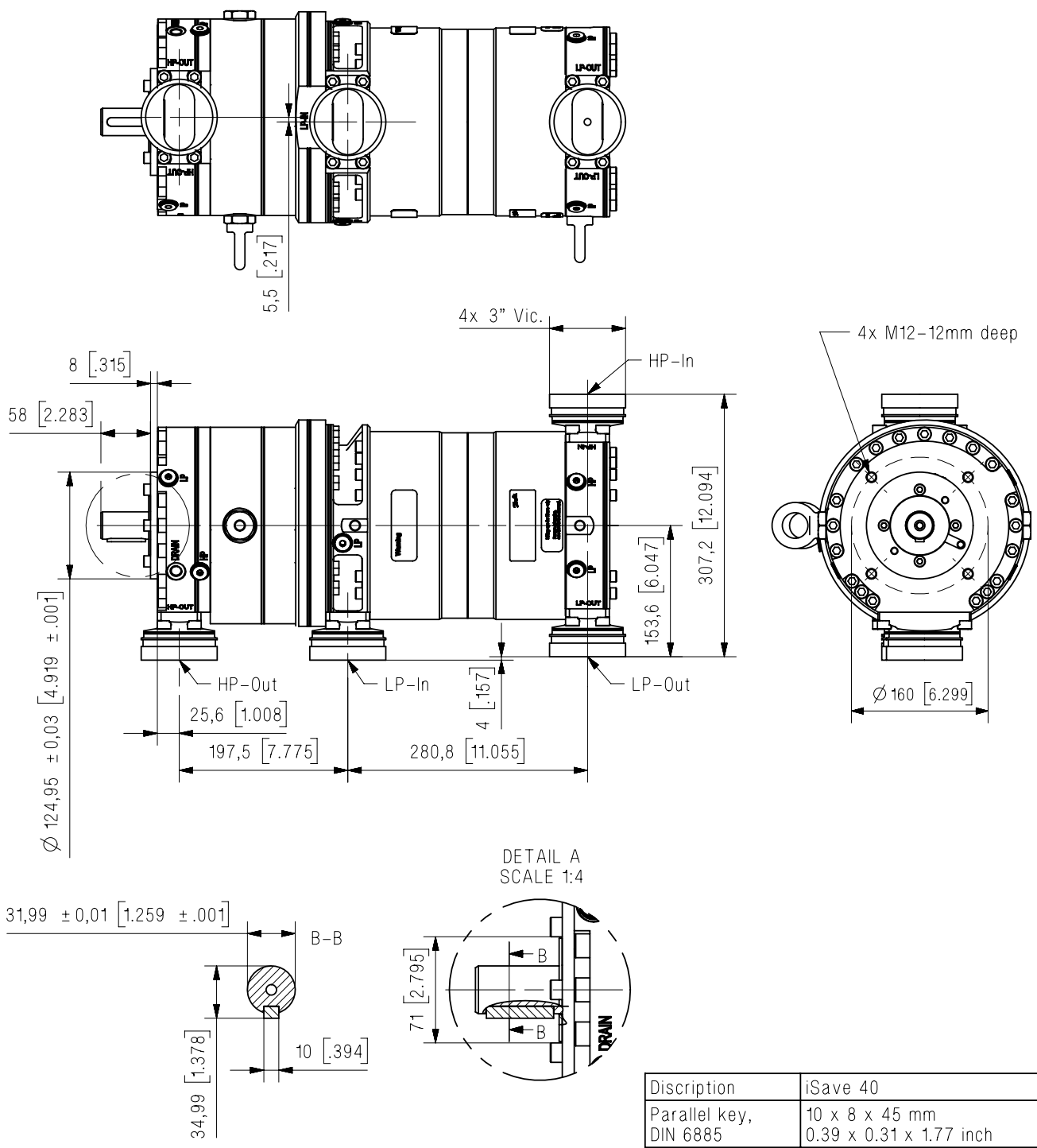

Discription	iSave 40
Parallel key, DIN 6885	10 x 8 x 45 mm 0.39 x 0.31 x 1.77 inch
HP-connections	3" Victaulic
LP-connections	3" Victaulic
Bleed	G 1/4"

Dimensions without tolerances acc. to ISO 2768-1 designation C.

8.2 Assembled iSave 21 Plus and iSave 40 with IEC electric motor

iSave 21 Plus, 5.5 kW, 4 pole, IEC motor

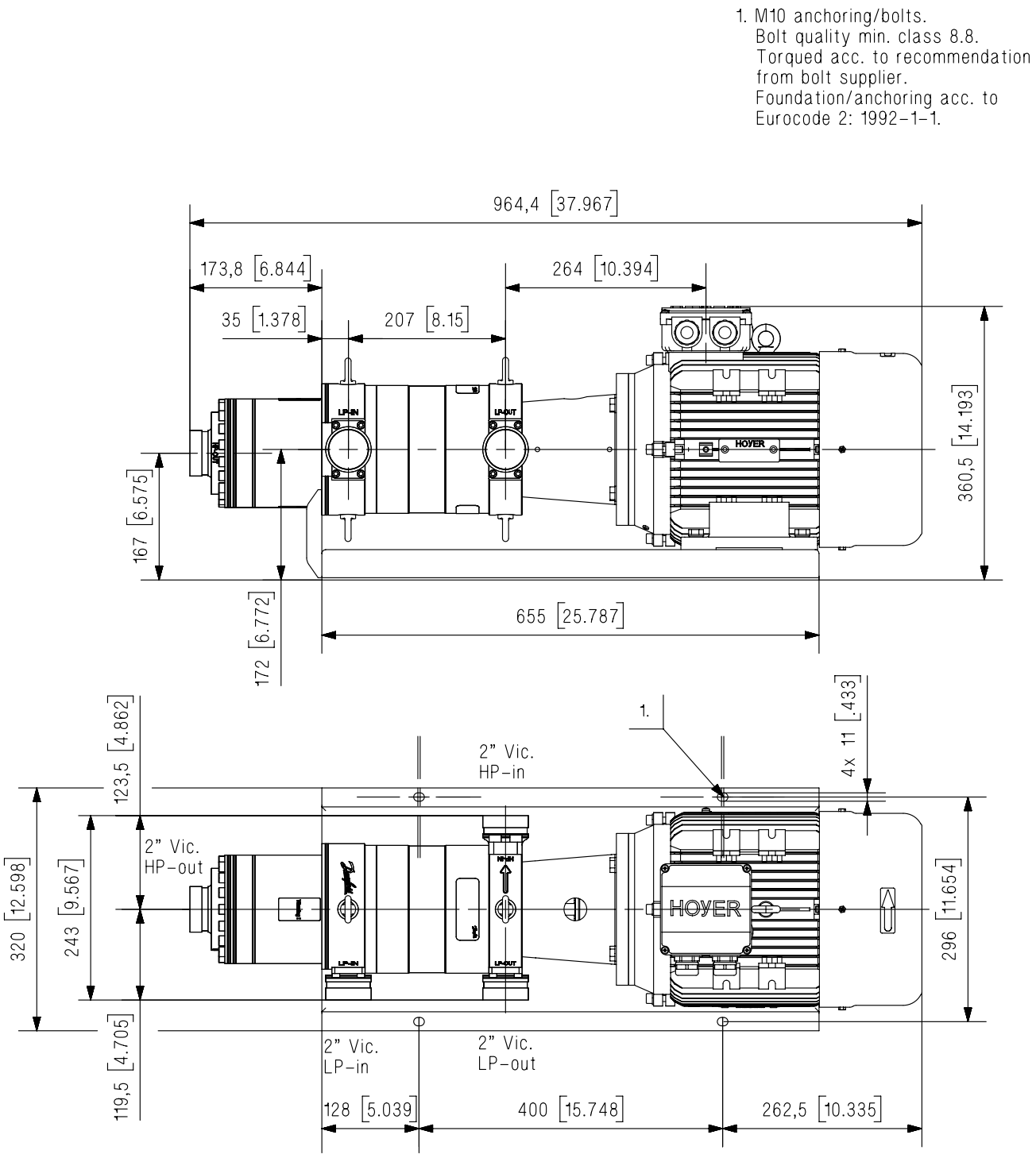

Dimensions without tolerances acc. To ISO 2768-1 designation C.

© Danfoss | 2023.03

iSave 21 Plus, 7.5 kW, 4 pole, IEC motor

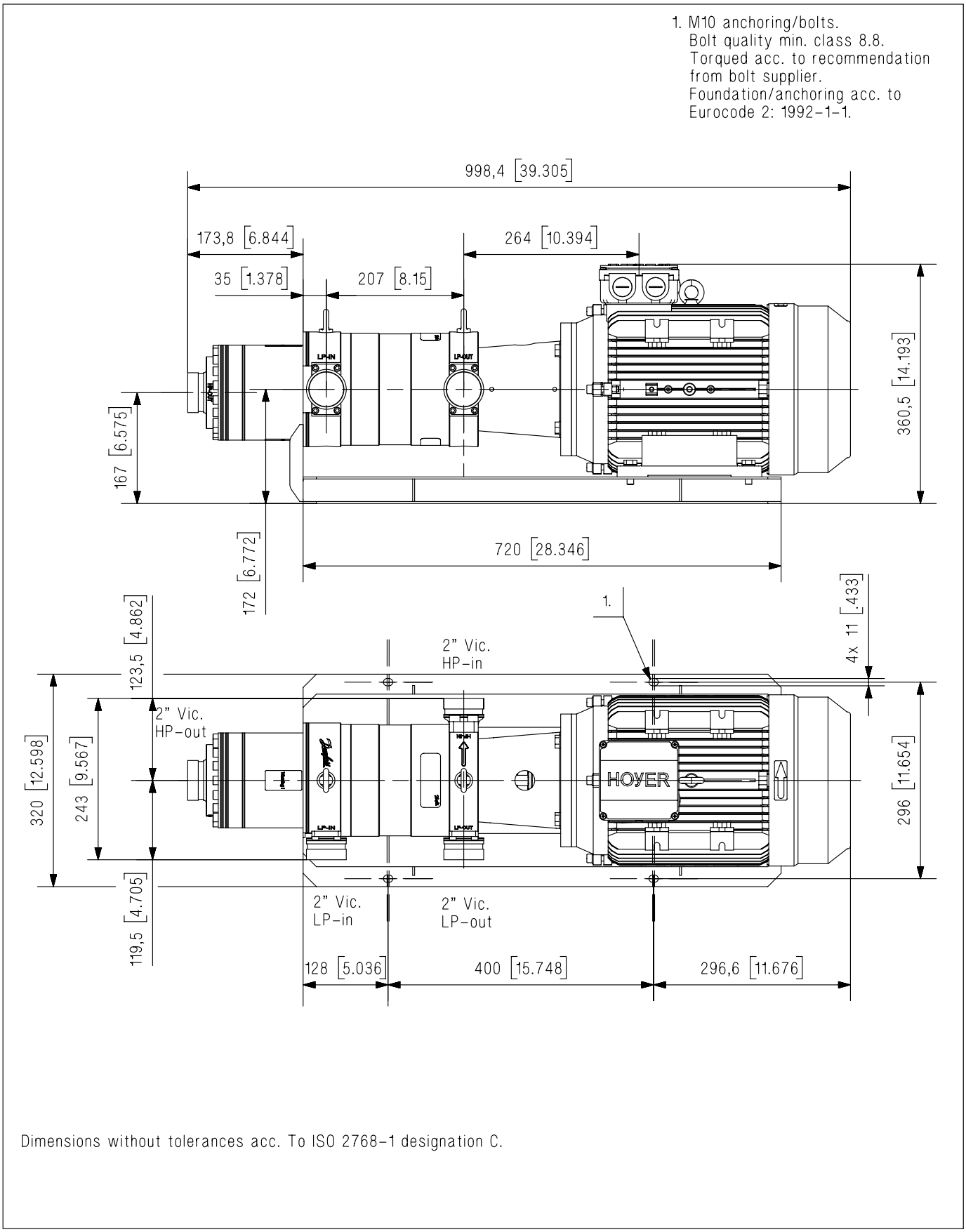

Dimensions without tolerances acc. To ISO 2768-1 designation C.

iSave 40 - horizontal, 11 kW, 6 pole, IEC motor

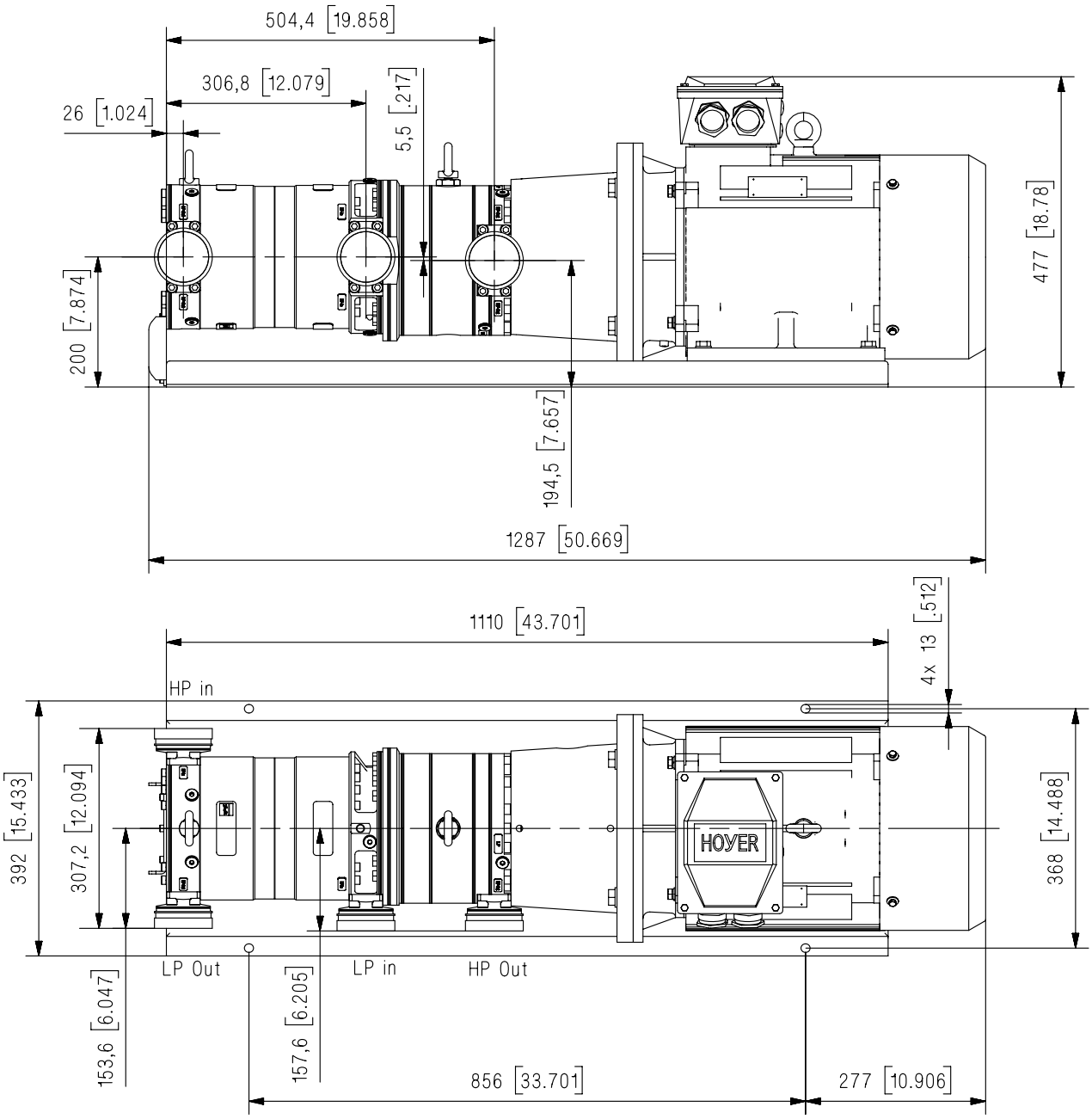

Dimensions without tolerances acc. To ISO 2768-1 designation C.

© Danfoss | 2023.03

iSave 40 - horizontal, 15 kW, 6 pole, IEC motor

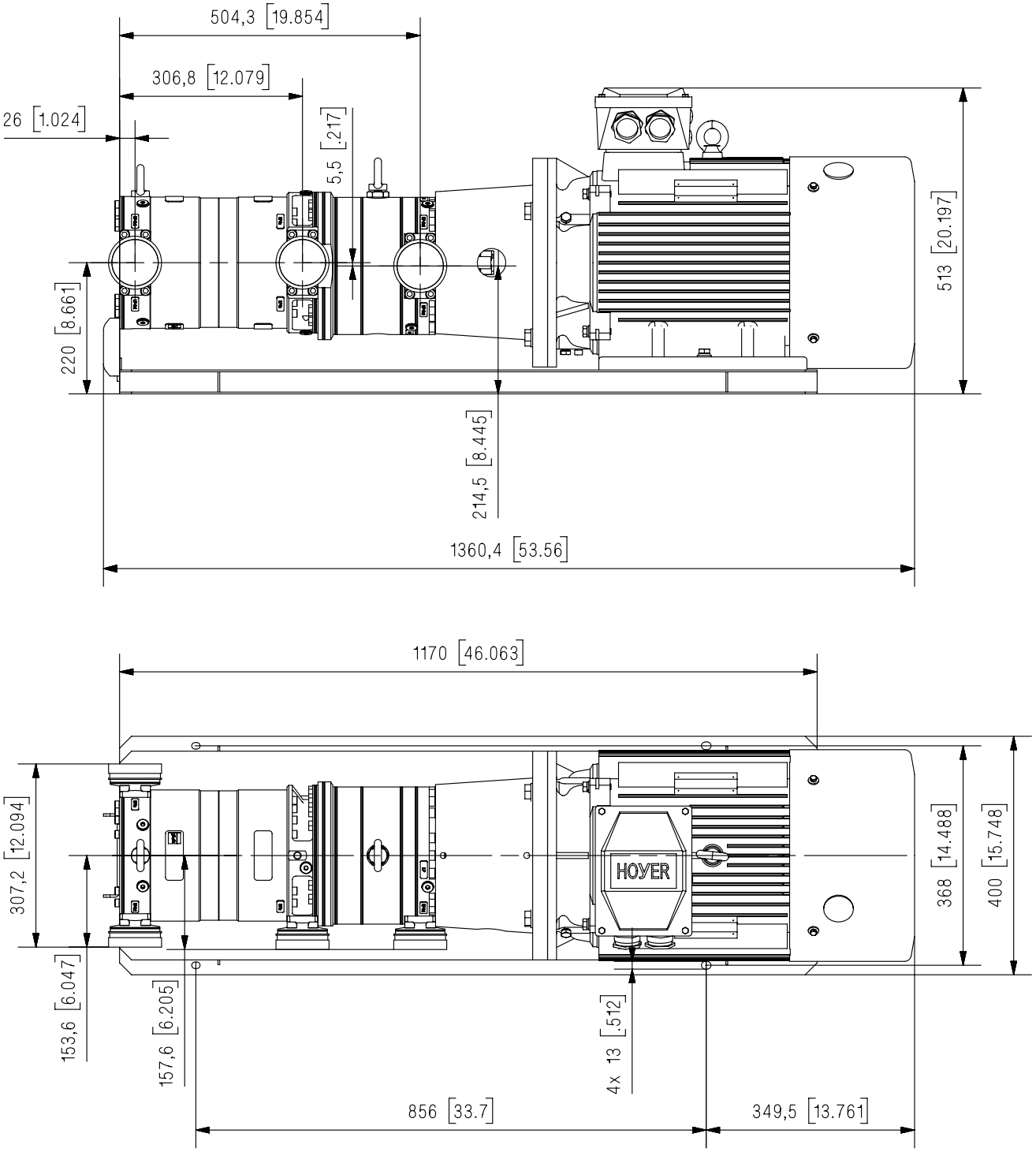

Dimensions without tolerances acc. To ISO 2768-1 designation C.

iSave 40 - vertical, 11 kW, 6 pole, IEC motor

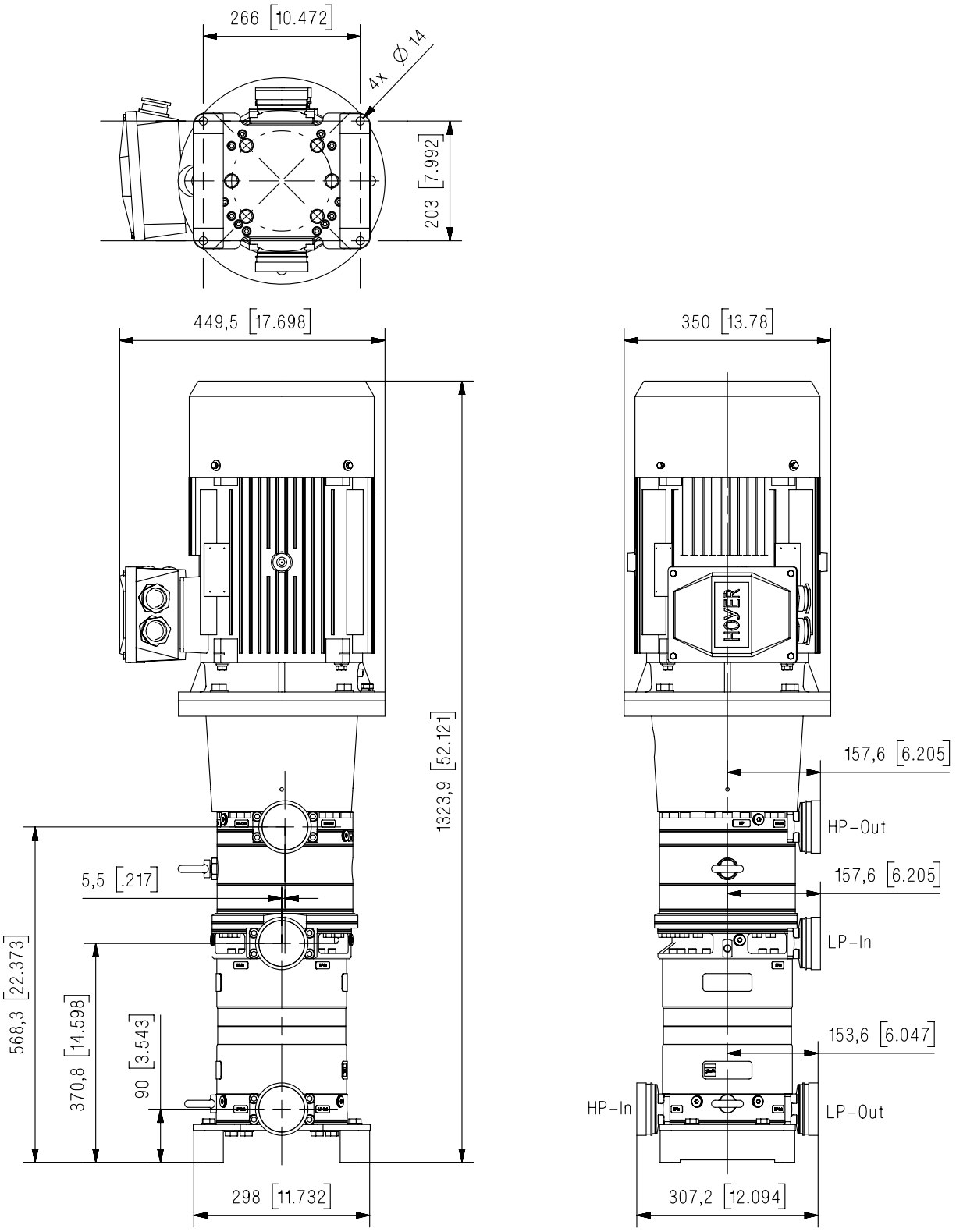

Dimensions without tolerances acc. to ISO 2768-1 designation C.

© Danfoss | 2023.03

iSave 40 - vertical, 15 kW, 6 pole, IEC motor

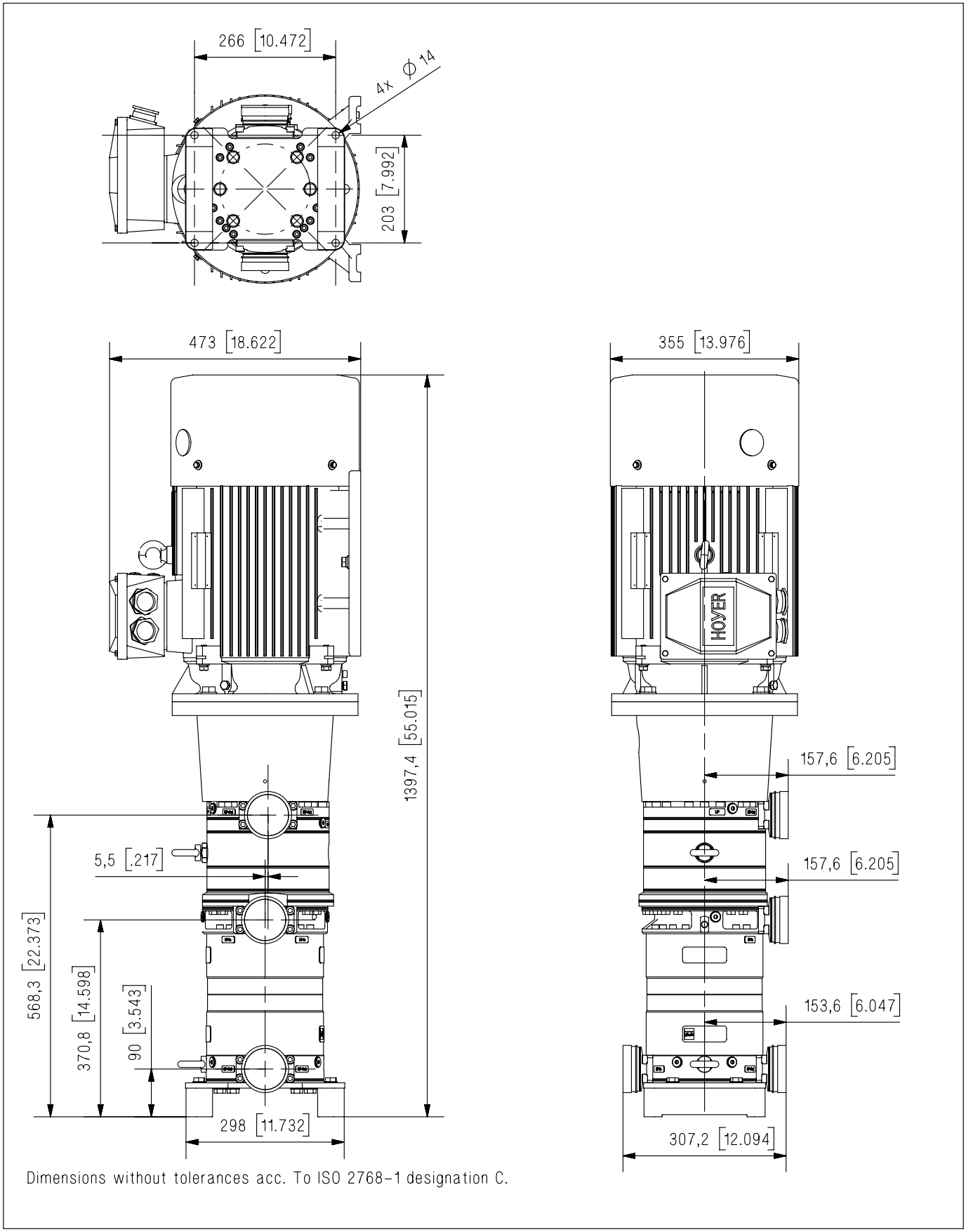

8.3 Assembled iSave 21 Plus and iSave 40 with NEMA motor

iSave 21 Plus, 10 HP, 4 pole, NEMA motor

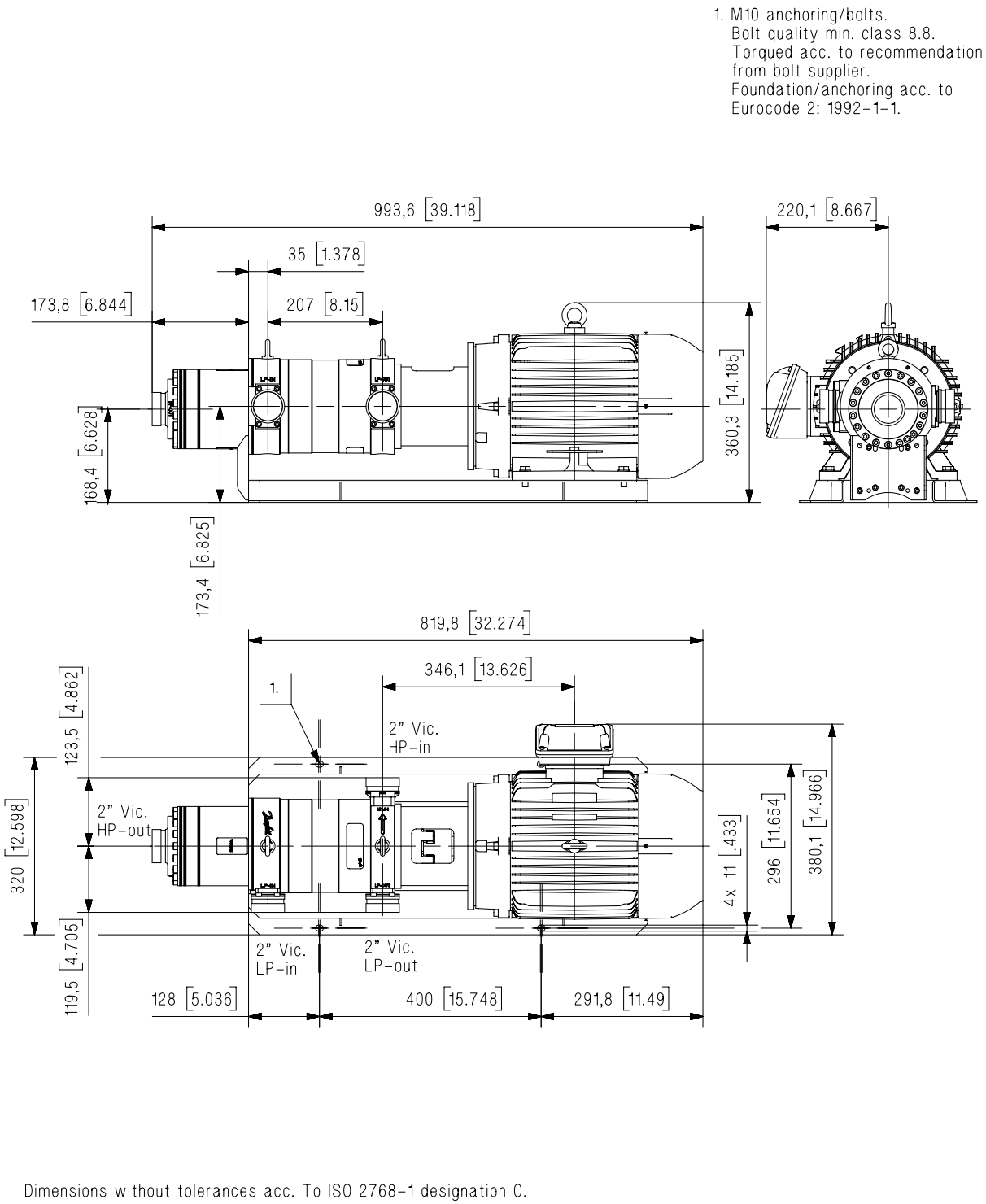

Dimensions without tolerances acc. To ISO 2768-1 designation C.

© Danfoss | 2023.03

iSave 21 Plus, 15 HP, 4 pole, NEMA motor

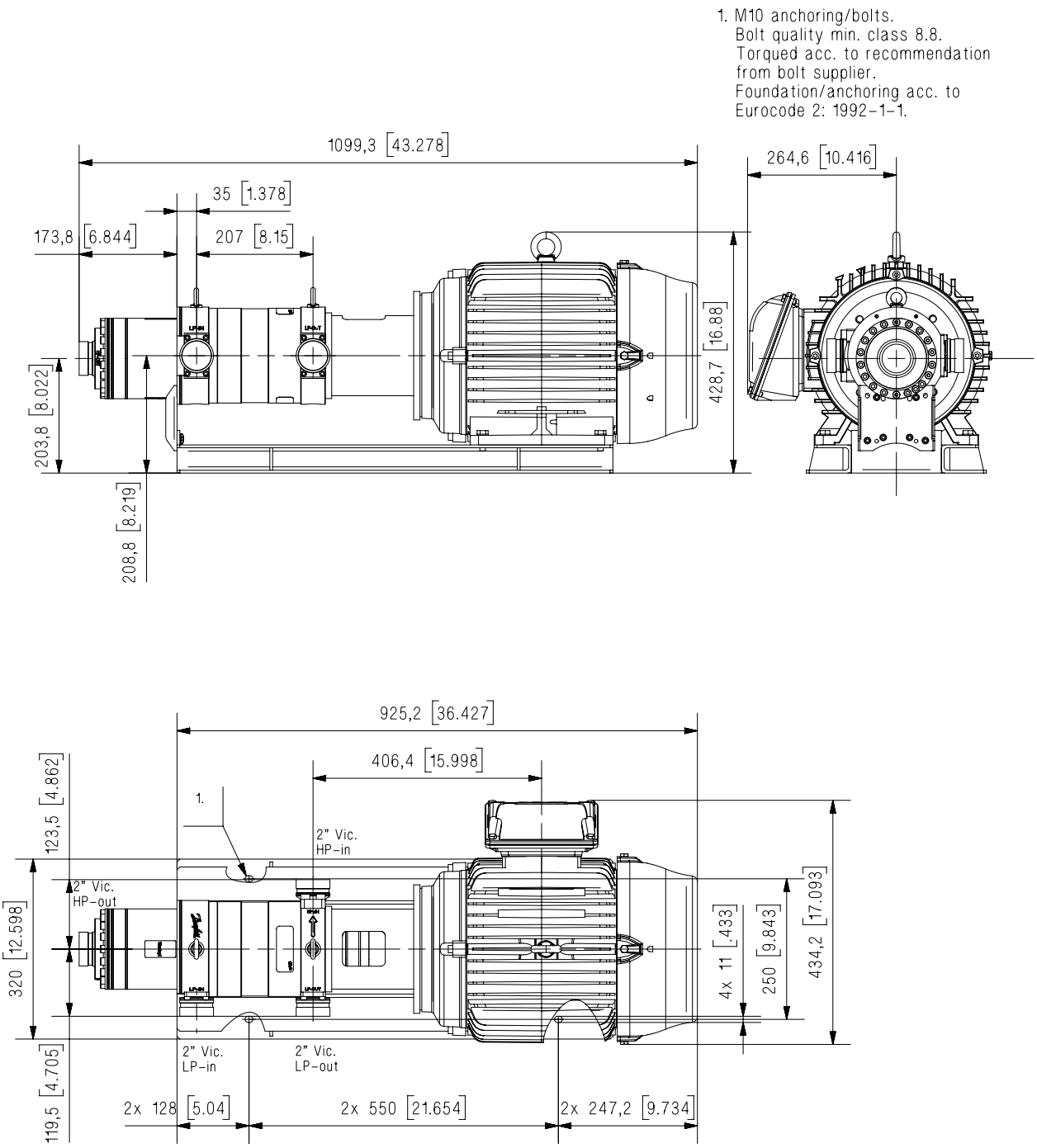

Dimensions without tolerances acc. To ISO 2768-1 designation C.

iSave 40 - horizontal, 20 HP, 6 pole, NEMA motor

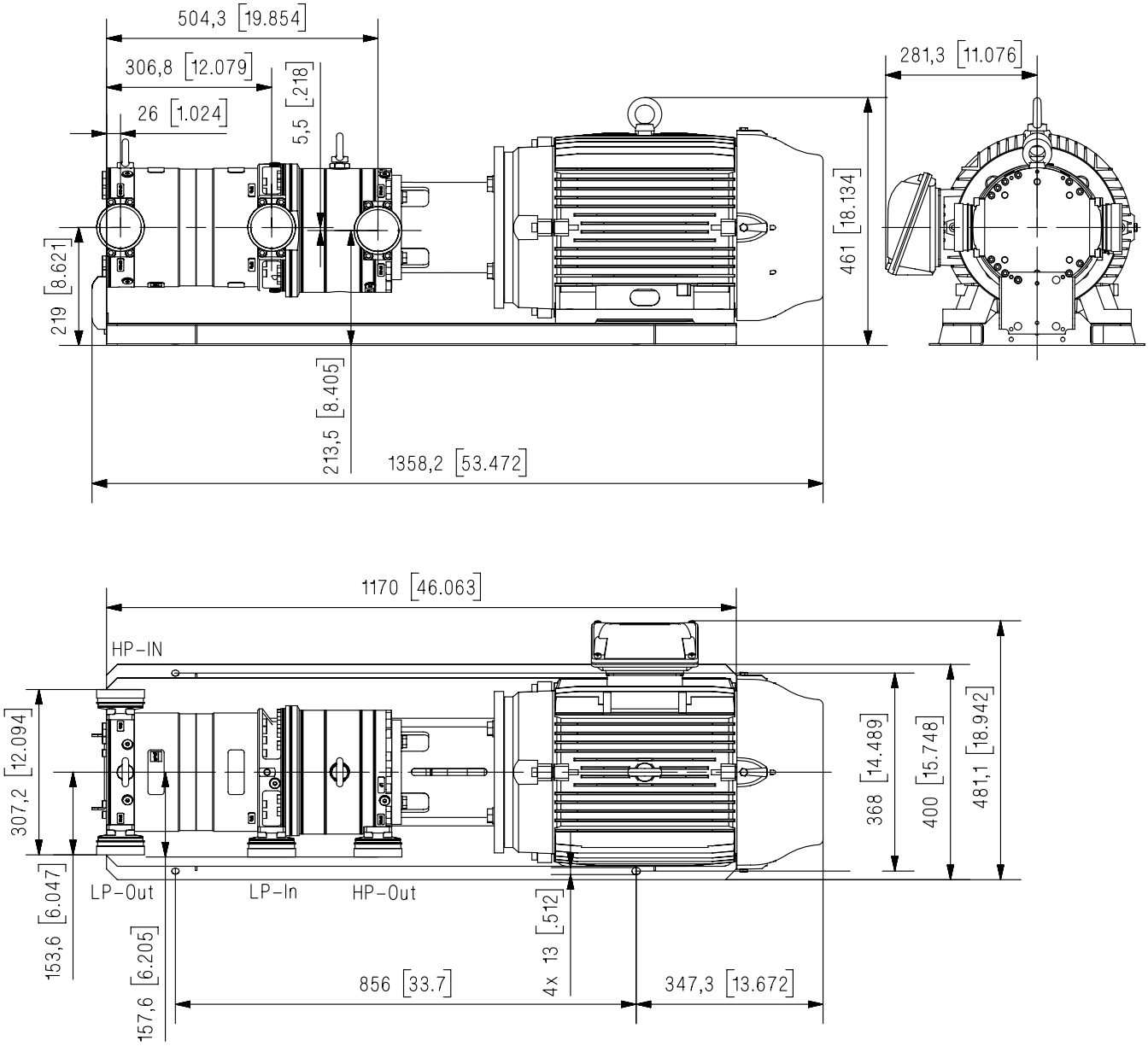

© Danfoss | 2023.03

iSave 40 - vertical, 20 HP, 6 pole, NEMA motor

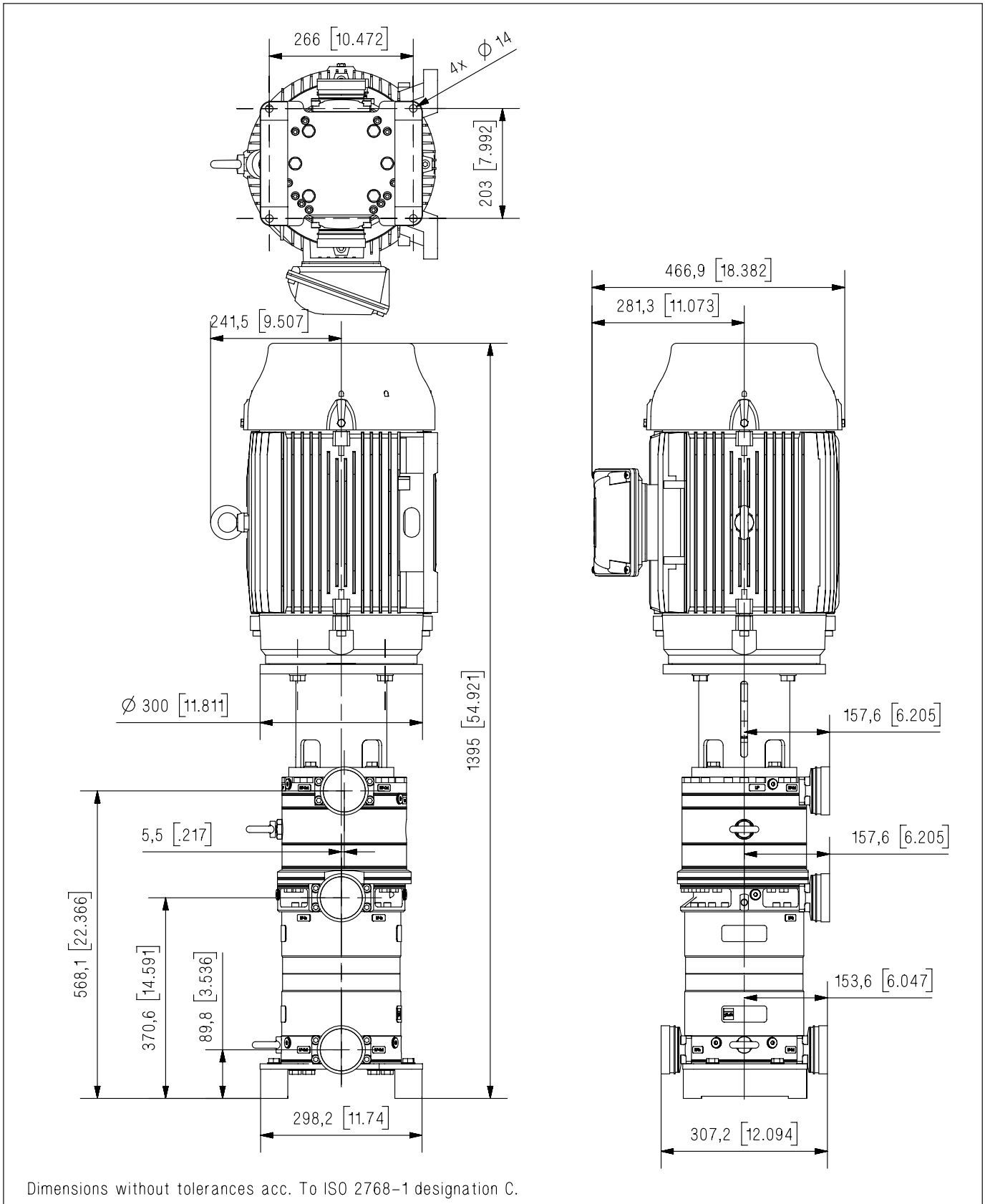

9. Installation

Orientation
iSave 21 Plus and iSave 40 can be mounted horizontal and vertical. iSave 40 can be mounted horizontally and vertically - when mounted vertically, the electric motor must be placed at the top of the iSave.
The iSave 21 Plus baseplate can be used for both horizontal and vertical installations.
The iSave 40 has a base when installed vertical.

Mounting
The figure below illustrates how to mount the iSave and connect it to the electric motor.

Note: Any axial and radial load on the shaft must be avoided.

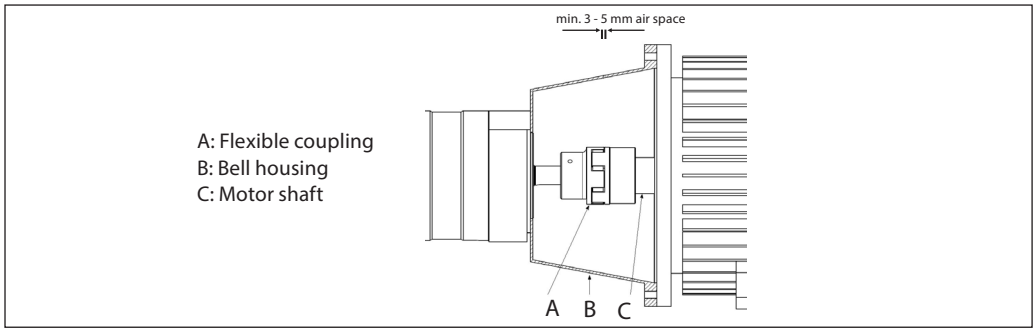

The iSave is connected to the electric motor by a bell housing and coupling.

If a horizontal iSave is delivered without base plate it is important to support the iSave and motor. The bell housing is not able to carry the weight of either the iSave or the motor when using horizontal mounting.

The iSave and motor must be supported without applying stress/overload to the bell housing.

If a horizontal iSave is delivered with a baseplate, a rigid mounting surface is required such as concrete foundation, optional base frame or a container with suitable steel substructure.

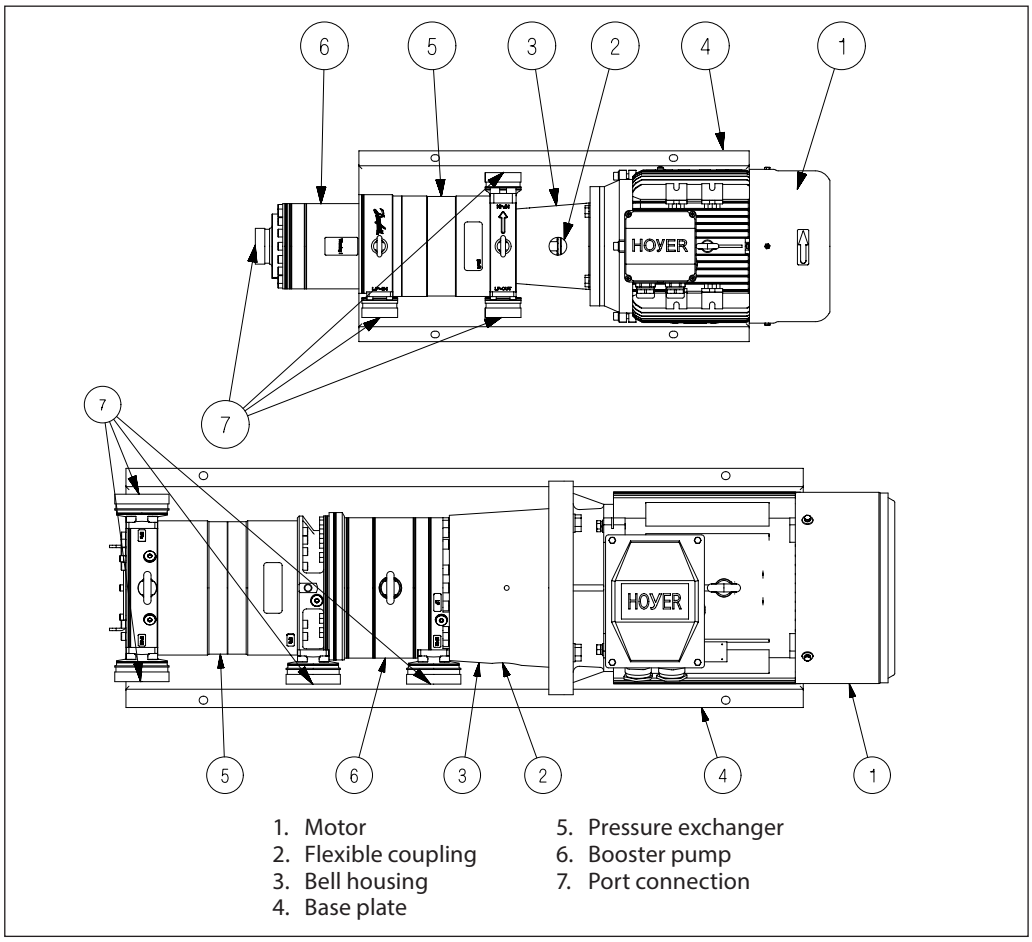

1. Motor
2. Flexible coupling
3. Bell housing
4. Base plate
5. Pressure exchanger
6. Booster pump
7. Port connection

© Danfoss | 2023.03

10. RO systems with an iSave

P&ID setup

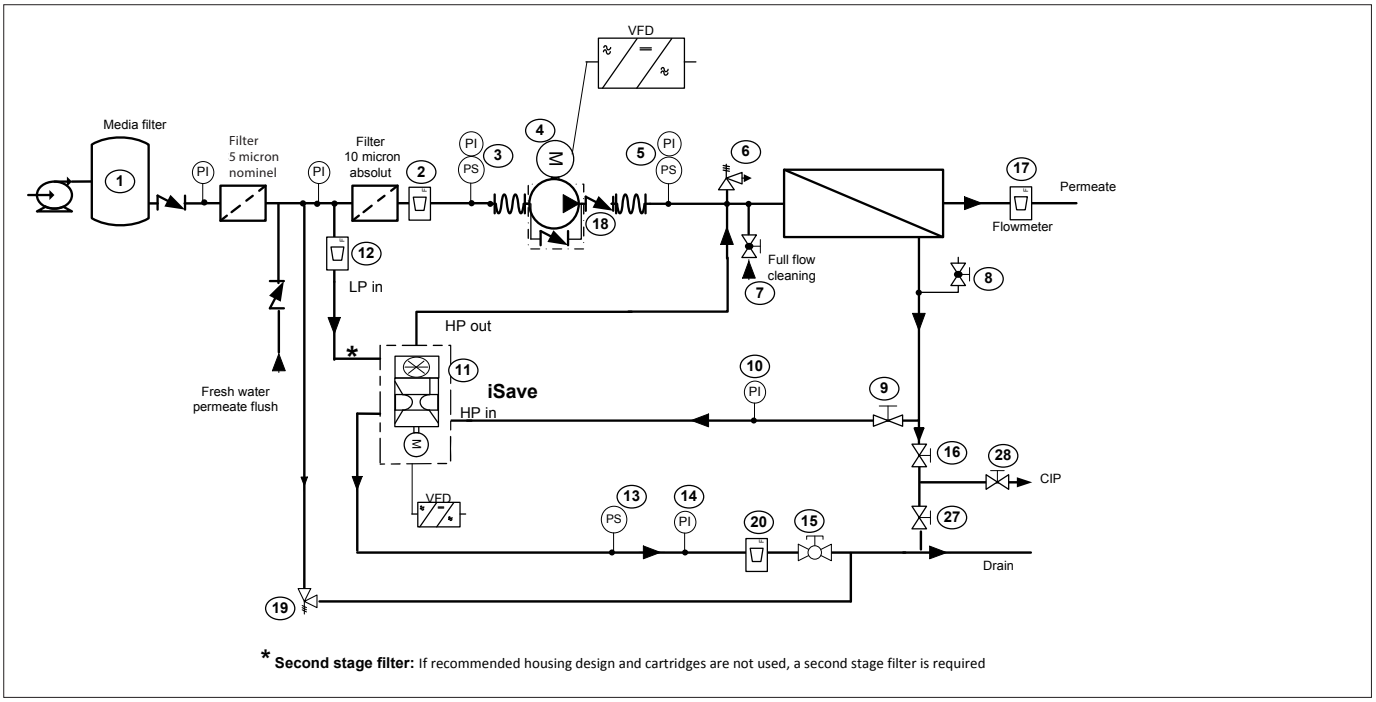

* **Second stage filter:** If recommended housing design and cartridges are not used, a second stage filter is required

Explanation of P&ID setup

A. Place inlet filters on LP string in front of the iSave (11). Inlet filters assure proper water quality. High quality water extends the service life of the whole system. It is impor tant with selection of a proper filter housing to ensure good cartridge end sealing. If there is a high risk of water by-pass it is recom mended to use a second stage filter solution. Please consult section 7, “Filtration” for guidance on how to select the right filter. Thoroughly clean pipes and flush system prior to start-up.

B. Place a monitoring pressure switch set (3) at minimum inlet pressure between filter and pump inlet. The monitoring switch must stop the iSave (11) and the high-pressure pump (4) at pressures lower than minimum inlet pressure.

C. Dimension the piping to obtain minimum pressure loss (large flow, minimum pipe length, minimum number of bends/connec- tions and fittings to prevent pressure loss and flow turbulence). Use flexible hoses to minimize vibrations and noise.

D. To balance the flow between high-pressure out and low-pressure in, place a variable area flow meter (12) on low-pressure inlet to the iSave.

E. In order to eliminate the risk of damage and cavitation, a positive pressure at the

low-pressure outlet from the iSave is always to be maintained at minimum 1 barg (14.5 psig) and maximum 10 barg (145 psig). It is recommended to install monitoring pressure switch (13) in order to prevent high/low-pres sure.

F. Install a VFD to control the speed of the iSave.

G. Install a pressure and flow control valve (15) to control pressure in low-pressure out.

H. Although the iSave 21 Plus automatically will bleed itself, there should be an air bleed valve (8) installed on the highest point of the high-pressure piping to ensure proper bleeding of the RO system.

I. The pressure relief valve (6) protects the whole system against pressure overload and relieves the water if the pressure exceeds the maximum set pressure.
If the high-pressure pump is a positive displacement pump, the pump can built up a very high pressure that will exceed mechani- cal strength of the membrane housing, pipes and other accessories.

J. The pressure relief valve (19) protects the low-pressure pipes against pressure overload and relieves the water if the pressure exceeds the maximum allowable pressure.

11. Performance curves

11.1 Performance and torque curves iSave 21 Plus

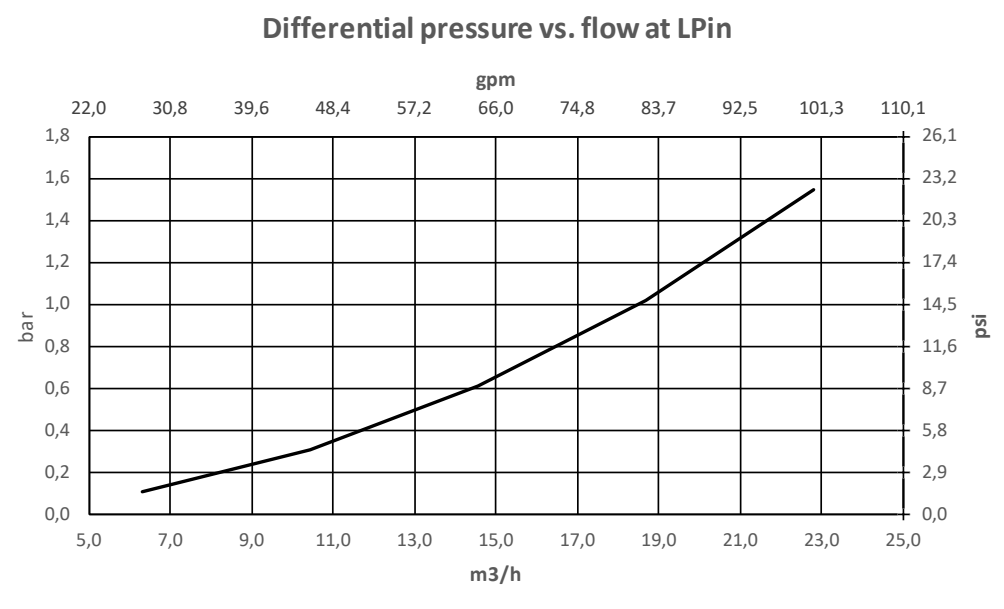

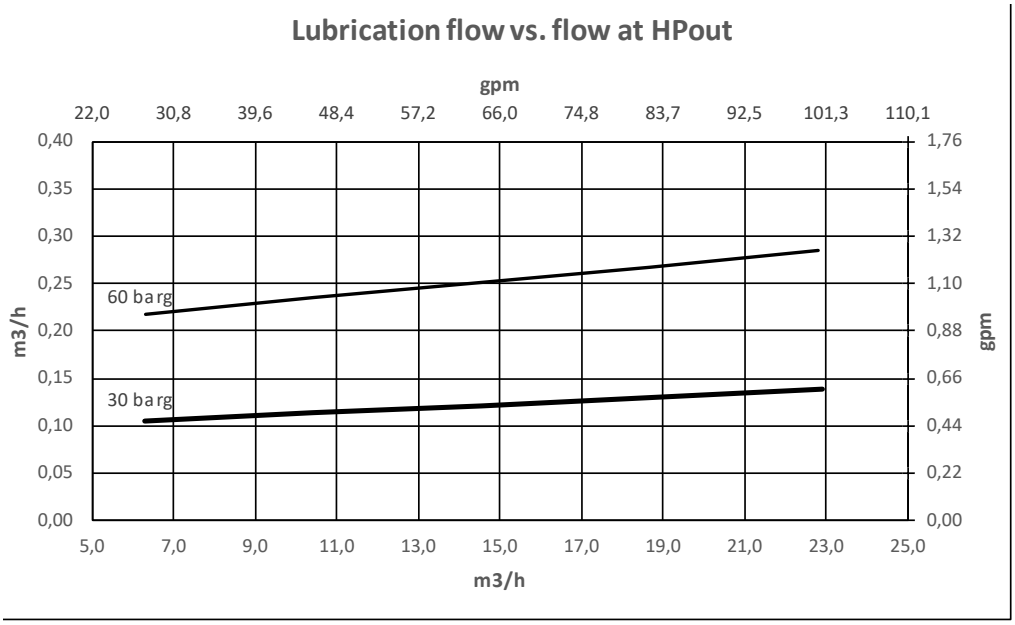

© Danfoss | 2023.03

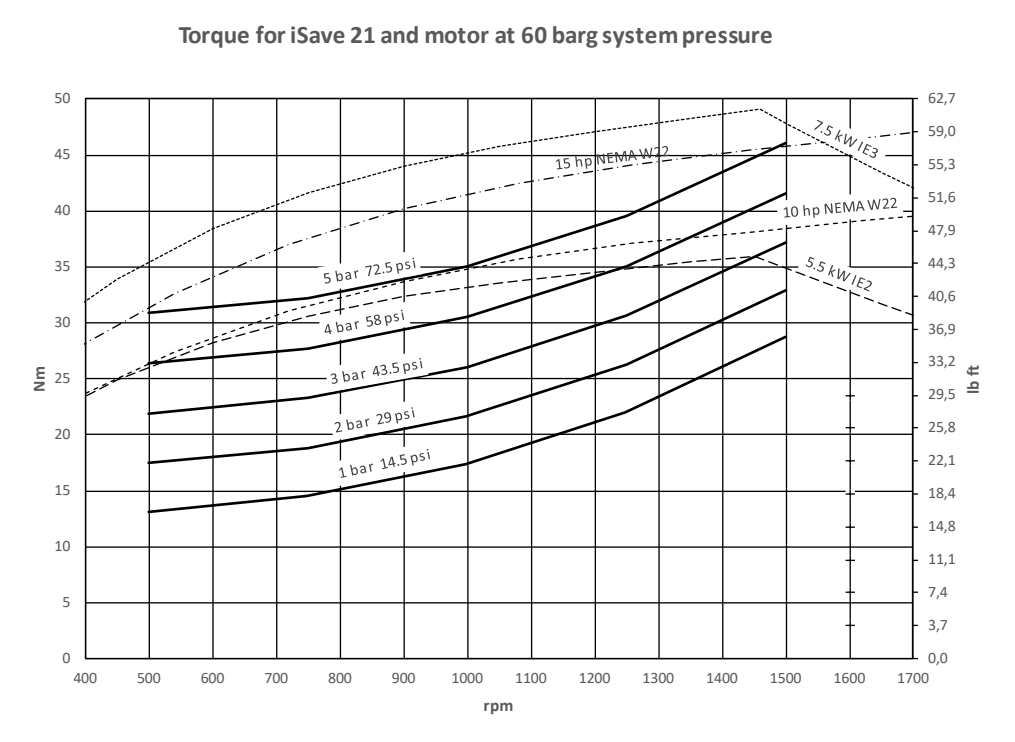
Torque for iSave 21 and motor at 60 barg system pressure
Nm
lb ft
rpm
50
45
40
35
30
25
20
15
10
5
0
62,7
59,0
55,3
51,6
47,9
44,3
40,6
36,9
33,2
29,5
25,8
22,1
18,4
14,8
11,1
7,4
3,7
0,0
400
500
600
700
800
900
1000
1100
1200
1300
1400
1500
1600
1700
7.5 kW IE3
15 hp NEMA W22
10 hp NEMA W22
5.5 kW IE2
5 bar 72.5 psi
4 bar 58 psi
3 bar 43.5 psi
2 bar 29 psi
1 bar 14.5 psi

11.2 Performance and torque curves iSave 40

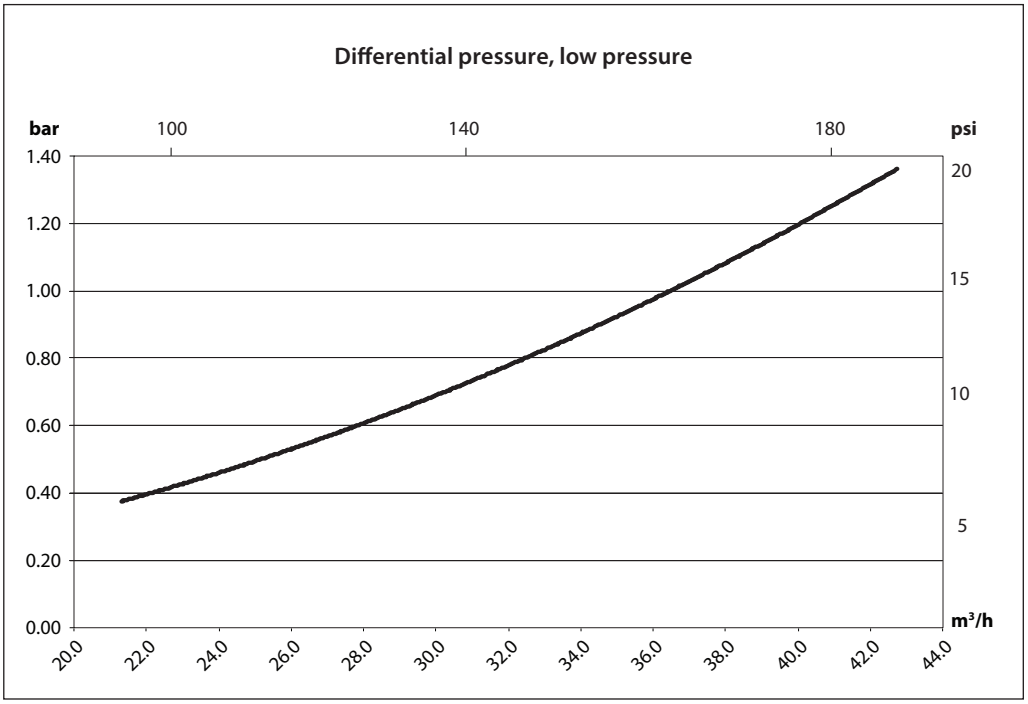

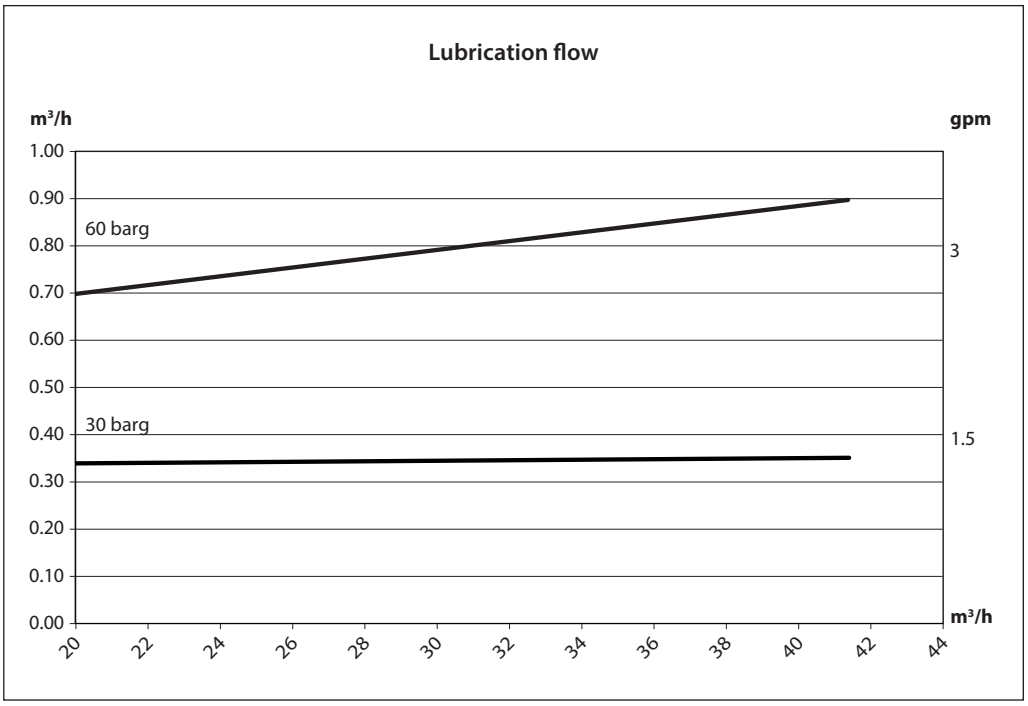

© Danfoss | 2023.03

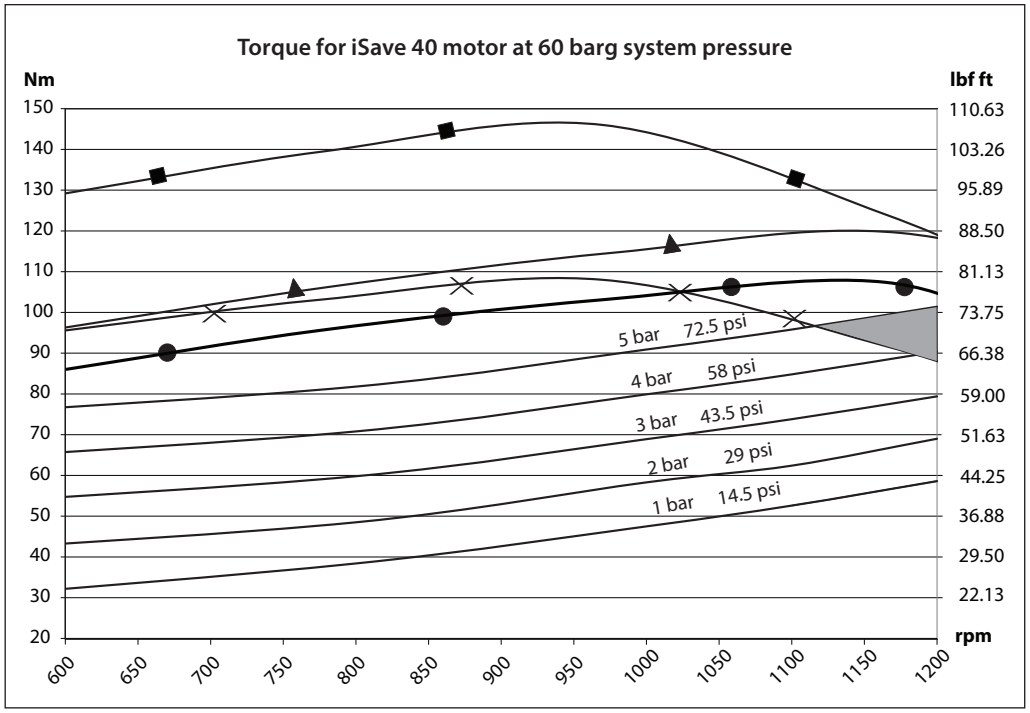

Important:
The marked area at 1100-1200 rpm shows the operation area which cannot be reached with a 11 kW motor at 400 voltage supply. A 15 kW is needed if max rpm (1100-1200) and max differential pressure (4 to 5 bar) is required.

Max motor torque for 15 kW, IEC180L-6, 50 Hz, 400 V

Max motor torque for 20 HP, NEMA286TC-6, 60 Hz, 460 V

Max motor torque for 11 kW, IEC160L-6, 50 Hz, 400 V

Max motor torque for 11 kW, IEC160L-6, 60 Hz, 480 V

The straight pressure lines (1 to 5 bar) show the needed shaft torque for the iSave at different pressures.

12. Service

12.1 Warranty

The Danfoss iSave is designed for long operation, low maintenance and reduced lifecycle costs.

Provided that the iSave has been running according to the Danfoss specifications, Danfoss guarantees 8,000 hours service-free operation, however, max. 18 months from date of production.

The life of an iSave may be greatly shortened if Danfoss recommendations concerning system design are not followed.

If the recommendations in the manual are not followed, Danfoss reserves the right to void the warranty.

Standstill

The iSave is made of Duplex or Super Duplex materials with excellent corrosion resistance. However, it is always required to flush the iSave when the system is shut down.

12.2 Maintenance

In our experience, poor filtration is the number one cause of iSave damage. Danfoss recommends an periodic inspection where worn parts, if any, must be replaced. This is done in order to to prevent a potential breakdown of the iSave.

12.3 Repair

In case of irregular function of the iSave, please contact Danfoss High Pressure Pumps.

Danfoss A/S
High Pressure Pumps • danfoss.com • +45 7488 2222 • highpressurepumps@danfoss.com

Any information, including, but not limited to information on selection of product, its application or use, product design, weight, dimensions, capacity or any other technical data in product manuals, catalogues descriptions, advertisements, etc. and whether made available in writing, orally, electronically, online or via download, shall be considered informative, and is only binding if and to the extent, explicit reference is made in a quotation or order confirmation. Danfoss cannot accept any responsibility for possible errors in catalogues, brochures, videos and other material.
Danfoss reserves the right to alter its products without notice. This also applies to products ordered but not delivered provided that such alterations can be made without changes to form, fit or function of the product.
All trademarks in this material are property of Danfoss A/S or Danfoss group companies. Danfoss and the Danfoss logo are trademarks of Danfoss A/S. All rights reserved.