VACON® 20 CP/X

AC DRIVES

SOLAR PUMP

APPLICATION MANUAL

VACON®

INDEX

Document ID: DPD01601F
Version release date: 9.1.20
Corresponds to application package ACIT1163V203.vcx

1. Safety 4
1.1 Danger 4
1.2 Warnings 4
2. Solar pump application 5
2.1 Specific functions of VACON® Solar pump application 5
2.2 Example of control connections 6
2.3 Optional boards 8
2.3.1 Option board installation 10
3. Description of groups 14
3.1 Keypad Reference: Menu REF 14
3.2 Monitor group: menu MON 15
3.2.1 Drive Monitors 15
3.2.2 Solar Monitors 16
3.3 Parameter Groups: Menu PAR 17
3.3.1 Group Basic Parameters: Menu PAR G1 18
3.3.2 Group Advanced Settings: Menu PAR G2 20
3.3.3 Group Analogue inputs: Menu PAR G3 21
3.3.4 Group Digital inputs: Menu PAR G4 22
3.3.5 Group Digital outputs: Menu PAR G5 24
3.3.6 Group Analogue outputs: Menu PAR G6 25
3.3.7 Group Supervisions: Menu PAR G7 26
3.3.8 Group Motor Control: Menu PAR G8 27
3.3.9 Group Protections: Menu PAR G9 29
3.3.10 Group Autoreset: Menu PAR G10 32
3.3.11 Group Fieldbus: Menu PAR G11 33
3.3.12 Group PID Control: Menu Par G12 34
3.3.13 Group Solar: Menu PAR G14 36
3.3.14 Group Flow meter: Menu PAR G15 37
3.4 System parameters, Faults and History faults: Menu FLT 38
4. Parameter description 41
4.1 Basic Parameters 41
4.2 Advanced settings 44
4.3 Analogue inputs 49
4.4 Digital inputs 54
4.5 Digital outputs 56
4.6 Analogue Output 58
4.7 Supervisions 59
4.8 Motor control 60
4.9 Protections 64
4.10 Autoreset 70
4.11 Fieldbus 71
4.11.1 Fieldbus mapping 72
4.12 PID Control 75
4.13 Solar 77
4.13.1 Start Settings 77
4.13.2 MPPT 77
4.14 Flow meter 82
5. Fault tracing 83

1. SAFETY

This manual contains clearly marked warning information which is intended for your personal safety and to avoid any unintentional damage to the product or connected appliances.

Before installing, commissioning or using the frequency converter, please read the warning information contained in VACON® 20X Installation Manual.

Please read the following additional safety instructions carefully.

Only VACON® authorized, trained and qualified personnel are allowed to install, operate and maintain the drive.

1.1 DANGER

These warnings are intended to personnel responsible for grounding the frequency converter.

	Ignoring the following instructions can be **extremely dangerous** a**nd may cause death or severe injury.**
	Ground the frequency converter to ensure personnel **safety and to reduce electromagnetic interference.**
	After disconnecting the AC drive from the mains or from the DC input supply, **wait** until the indicators on the keypad go out (if no keypad is attached, see the indicators on the cover). Wait an additional 30 seconds before starting any work on the connections of VACON® 20X Drive. After expiration of this time, use measuring equipment to absolutely ensure that no voltage is present. **Always ensure absence of voltage before starting any electrical work!**

1.2 WARNINGS

	The **touch current** of VACON® 20X drives exceeds 3.5mA AC. According to standard EN61800-5-1, **a reinforced protective ground connection** must be ensured. See VACON® 20X Installation Manual for further information.
	Never work on the photovoltaic generator or frequency converter and its input/output cables when the frequency converter is connected to the mains or to the photovoltaic generator.
	Before performing any measurement on the frequency converter, disconnect or isolate the mains supply voltage or the DC input supply.
	Do not touch the components on the frequency converter or on the string box cabinet that have high DC voltage.
	The photovoltaic generator **cells exposed to light supply DC voltage** even at low light intensity.

2. Solar pump application

The VACON® 20 CP/X drive contains a preloaded application for instant use.

The parameters of this application are listed in chapter 3.3 of this manual and explained in more detail in chapter 4.

2.1 Specific functions of VACON® Solar pump application

The VACON® Solar Pump allows flexible use of VACON® 20 CP/X frequency converters. This dedicated application SW was developed to drive a Solar Pump with an optimized MPPT (Maximum Power Point Tracking) for 20X supplied by Solar Panels.

The MPPT is based on 4 parallel algorithms:

- Feed-Forward Controller (to follow the radiation variations)
- Correction Controller (to compensate the temperature variations)
- Oscillation Damping Regulator (to prevent the panel entering in the "current source" branch of the characteristic)
- Local Maxima logic (to prevent the regulator from being trapped in a local maximum lower than absolute maximum)

Features

The MPP Tracker controls DC voltage reference in order to find the maximum power.

The drive can be controlled through I/O terminals, a fieldbus or the optional keypad.Two programmable control places and sources for the frequency reference are available, for easy local/remote control.

Frequency reference can be direct (analogue input, preset speeds or fieldbus) or controlled by the internal PID regulator.

All the functionalities can be controlled through a fieldbus.

The motor identification function allows automatic optimization of the voltage/frequency curve, for a optimal torque response also at low motor speed.

It is possible to install one optional board for I/O expansion.

Underload protection can be managed by measuring Motor torque (standard sensorless mode) or by measuring the water flow with a flow meter sensor. This sensor can be an analogue signal or a digital input. With this sensor it is possible to measure the water flow [litres/min] and the total volume of the water flow [m^3].

Sleep mode can be enabled or disabled with a parameter.

Digital inputs can be used to measure water levels (minimum and maximum).

2.2 EXAMPLE OF CONTROL CONNECTIONS

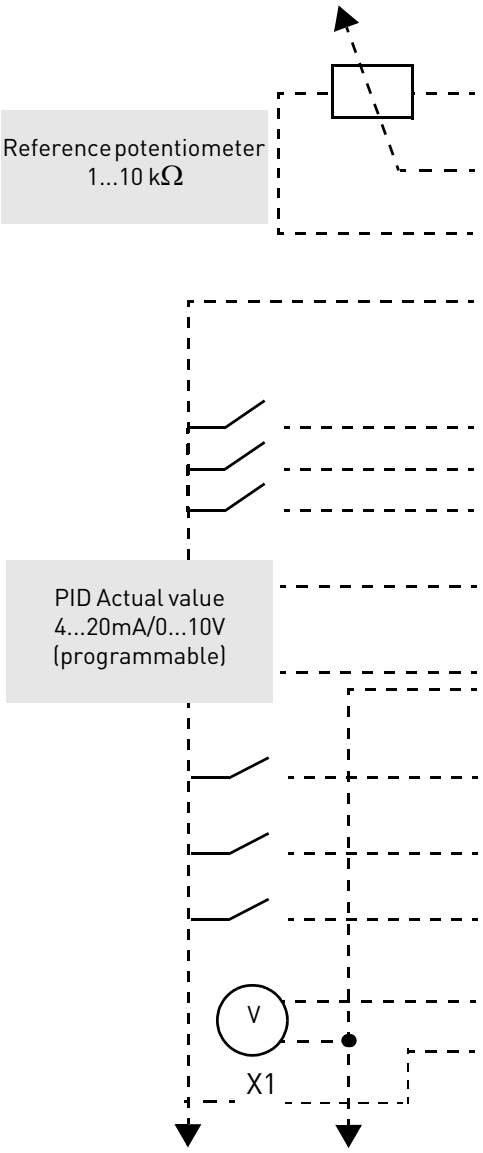

Standard I/O terminals			
Terminal		Signal	Default
A	RS485	Serial bus, negative	
B	RS485	Serial bus, positive	
1	+10 Vref	Reference output	
2	AI1+	Analogue input, voltage or current*	(default Voltage) Freq. Reference
3	AI1-/GND	Analogue input common (current)	
6	24Vout	24V aux. voltage	
7	DIN COM	Digital input common	
8	DI1	Digital input 1	Start 1
9	DI2	Digital input 2	Start 2
10	DI3	Digital input 3	Fault reset
4	AI2+	Analogue input, voltage or current*	(def. Current) PID feedback
5	AI2-/GND	Analogue input common (current)	
13	DO1-	Digital Output Common	
14	DI4	Digital input 4	Preset Speed B0
15	DI5	Digital input 5	Ext. fault Closed
16	DI6	Digital input 6	Not used
18	AO1+	Analogue signal (+output)	Output frequency
20	DO1+	Digital output +	Fault

*Selectable with DIP switches, see VACON® 20 CP/X Installation Manual

Table 1. Connection example, standard I/O terminals.

To Relay terminals
1 or 2

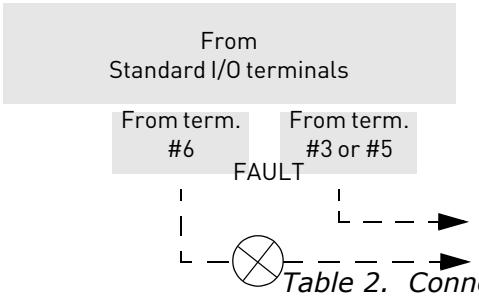

Relay terminals			Default
Terminal		Signal	
22	RO1/2 CM	Relay output 1	READY
23	RO1/3 NO		
24	RO1/1 NC	Relay output 1	RUN
25	RO1/2 CM		
26	RO1/3 NO		

Table 2. Connection example, Relay terminals

2.3 OPTIONAL BOARDS

One optional I/O expansion board can be installed into the slot on the right side of the drive. The following boards are supported:

OPTB1: 6 Digital Inputs-Outputs
The first 3 terminals are reserved as digital inputs (DIN7, DIN8, DIN9). The second 3 terminals can be used as inputs (DIN10, DIN11, DIN12) or digital outputs (EO1, EO2, EO3). The number of terminals used as input must be declared in parameter P2.24 (hidden if the board is not installed). This number determines the higher value for the selection of the digital input connected to a certain logical function. It also changes the visibility of parameters for the selection of digital outputs function (P5.9, P5.10, P5.11).

OPTB2: 1 Thermistor Input, 2 Relays Outputs
Response to thermistor fault can be programmed with parameter P9.16. Relays functions can be programmed with parameters P5.9, P5.10 (hidden if the board is not installed).

OPTB5: 3 Relays Outputs
Relays functions can be programmed with parameters P5.9, P5.10, P5.11 (hidden if the board is not installed).

OPTB9: 5 Digital Inputs, 1 Relay Output
The higher value for the selection of the digital input (DIN7, DIN8, DIN9, DIN10, DIN11) connected to a certain logical function is set to 11. Relay functions can be programmed with parameters P5.9 (hidden if the board is not installed).

OPTBF: 1 Analogue Output, 1 Digital Output, 1 Relay Output

The digital output can be programmed with parameter P5.12. The digital output can be programmed with parameter P5.9. Parameters are hidden if the board is not installed.

OPTC3/E3: Profibus DPV1 fieldbus board
VACON® 20CP/X frequency converters can be connected to the PROFIBUS DP network using a fieldbus board. The converter can then be controlled, monitored and programmed from the Host system.OPTE3 option board also supports connection from DP Master (class 2) if DP-V1 is enabled. In this case, the Master class 2 can initiate a connection, read and write parameters using the PROFIdrive Parameter Access service, and close the connection. The PROFIBUS DP fieldbus is connected to the OPTE3 board using a 5-pin pluggable bus connector. The only difference between OPTE3 and OPTE5 boards is the fieldbus connector.

OPTC4 LonWorks fieldbus board
VACON® 20CP/X frequency converters can be connected to the LonWorks® network using a fieldbus board. The converter can then be controlled, monitored and programmed from the Host system.

OPTC5/E5: Profibus DPV1 fieldbus board (D-type connector)
VACON® 20CP/X frequency converters can be connected to the PROFIBUS DP network using a fieldbus board. The converter can then be controlled, monitored and programmed from the Host system.OPTE5 option board also supports connection from DP Master (class 2) if DP-V1 is enabled. In this case, the Master class 2 can initiate a connection, read and write parameters using the PROFIdrive Parameter Access service, and close the connection. he PROFIBUS DP fieldbus is connected to the OPTE5 board using a 9-pin female sub-D-connector. The only difference between OPTE3 and OPTE5 boards is the fieldbus connector.

OPTC6/E6: CanOpen fieldbus board

VACON® 20CP/X frequency converters can be connected to the CanOpen system using a fieldbus board. The converter can then be controlled, monitored and programmed from the Host system. VACON® CanOpen Board is connected to the fieldbus through a 5-pin pluggable bus connector (board NXOPTC6/E6).

OPTC7/E7: DeviceNet fieldbus board

VACON® 20CP/X frequency converters can be connected to the DeviceNet using a fieldbus board. The converter can then be controlled, monitored and programmed from the Host system. VACON® DeviceNet Board is connected to the fieldbus through a 5-pin pluggable bus connector (board OPTC7/E7).

OPTCI: Modbus TCP fieldbus board

VACON® 20CP/X frequency converters can be connected to Ethernet using an Ethernet fieldbus board OPTCI. Every appliance connected to an Ethernet network has two identifiers; a MAC address and an IP address. The MAC address (Address format: xx:xx:xx:xx:xx:xx) is unique to the appliance and cannot be changed. The Ethernet board's MAC address can be found on the sticker attached to the board or by using the VACON® IP tool software NCIPConfig. Please find the software installation at www.vacon.com. In a local network, IP addresses can be defined by the user as long as all units connected to the network are given the same network portion of the address. For more information about IP addresses, contact your Network Administrator. Overlapping IP addresses cause conflicts between appliances.

OPTCP: Profinet fieldbus board

VACON® 20CP/X frequency converters can be connected to Ethernet using an Ethernet fieldbus board OPTCP. Every appliance connected to an Ethernet network has two identifiers; a MAC address and an IP address. The MAC address (Address format: xx:xx:xx:xx:xx:xx) is unique to the appliance and cannot be changed. The Ethernet board's MAC address can be found on the sticker attached to the board or by using the VACON® IP tool software NCIPConfig. You can find the software installation at www.vacon.com. In a local network, IP addresses can be defined by the user as long as all units connected to the network are given the same network portion of the address. For more information about IP addresses, contact your Network Administrator. Overlapping IP addresses cause conflicts between appliances.

OPTCQ: Ethernet IP fieldbus board

VACON® 20CP/X frequency converters can be connected to Ethernet using an EtherNet/IP fieldbus board OPT-CQ. Every appliance connected to an Ethernet network has two identifiers; a MAC address and an IP address. The MAC address (Address format: xx:xx:xx:xx:xx:xx) is unique to the appliance and cannot be changed. The EtherNet/IP board's MAC address can be found on the sticker attached to the board or by using the VACON® IP tool software NCIPConfig. Please find the software installation at www.vacon.com. In a local network, IP addresses can be defined by the user as long as all units connected to the network are given the same network portion of the address. For more information about IP addresses, contact your Network Administrator. Overlapping IP addresses cause conflicts between appliances.

2.3.1 OPTION BOARD INSTALLATION

NOTE! It is not allowed to add or replace option boards or fieldbus boards on an AC drive with the power switched on. This may damage the boards.

1	• Open the cover of the drive.

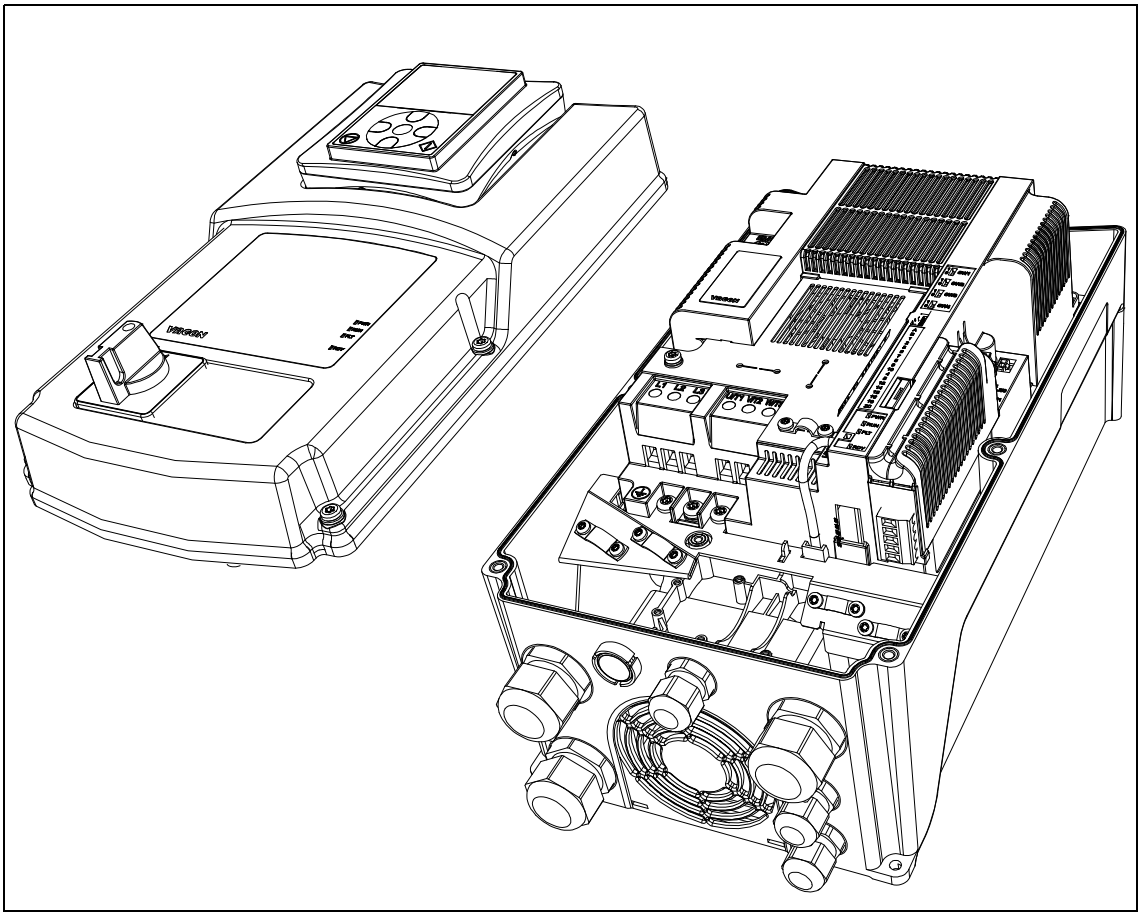

Figure 1. Opening the main cover, MU3 example.

The relay outputs and other I/O-terminals may have a dangerous control voltage present even when the drive is disconnected from mains.

2	• Remove the option slot cover.

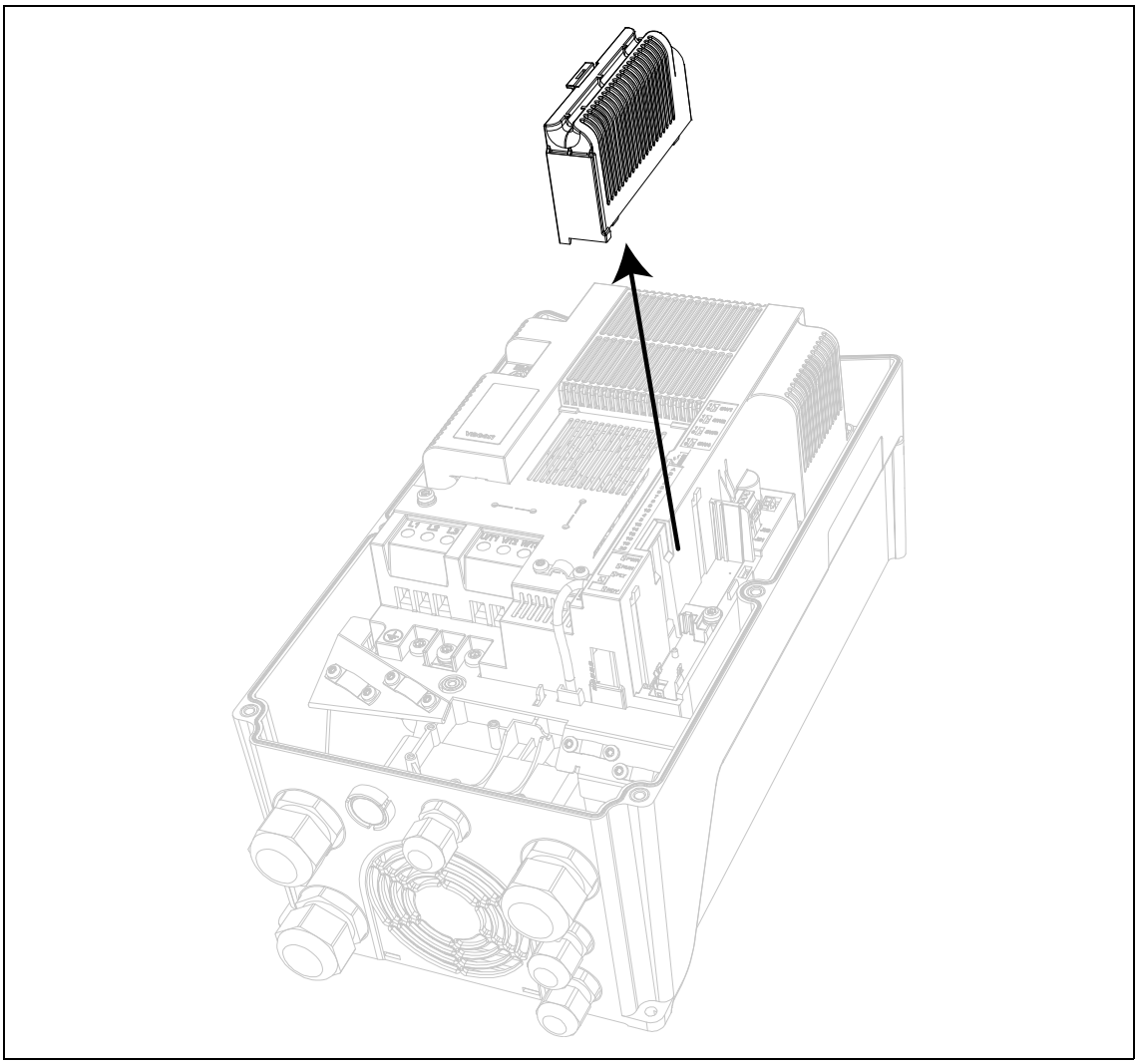

Figure 2. Removing the option slot cover.

3	• Make sure that the sticker on the connector of the board says "dv" (dual voltage). This indicates that the board is compatible with VACON® 20CP/X. See below: 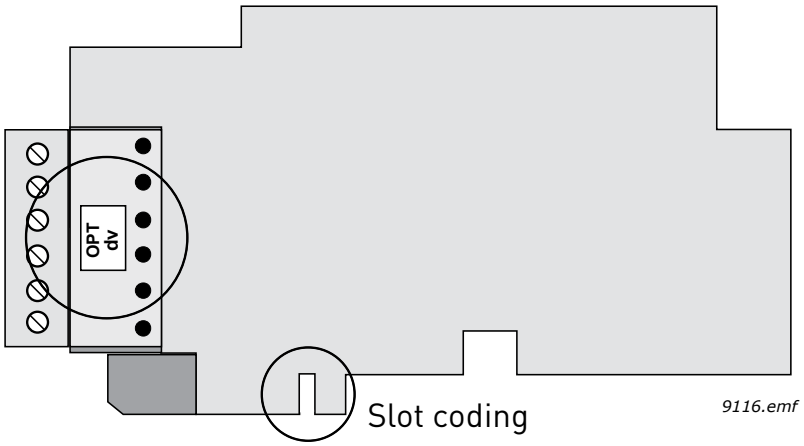 • **NOTE:** Incompatible boards cannot be installed on VACON® 20CP/X. Compatible boards have a slot coding that enable the placing of the board (see above).

4	• Install the option board into the slot as shown in the picture below.

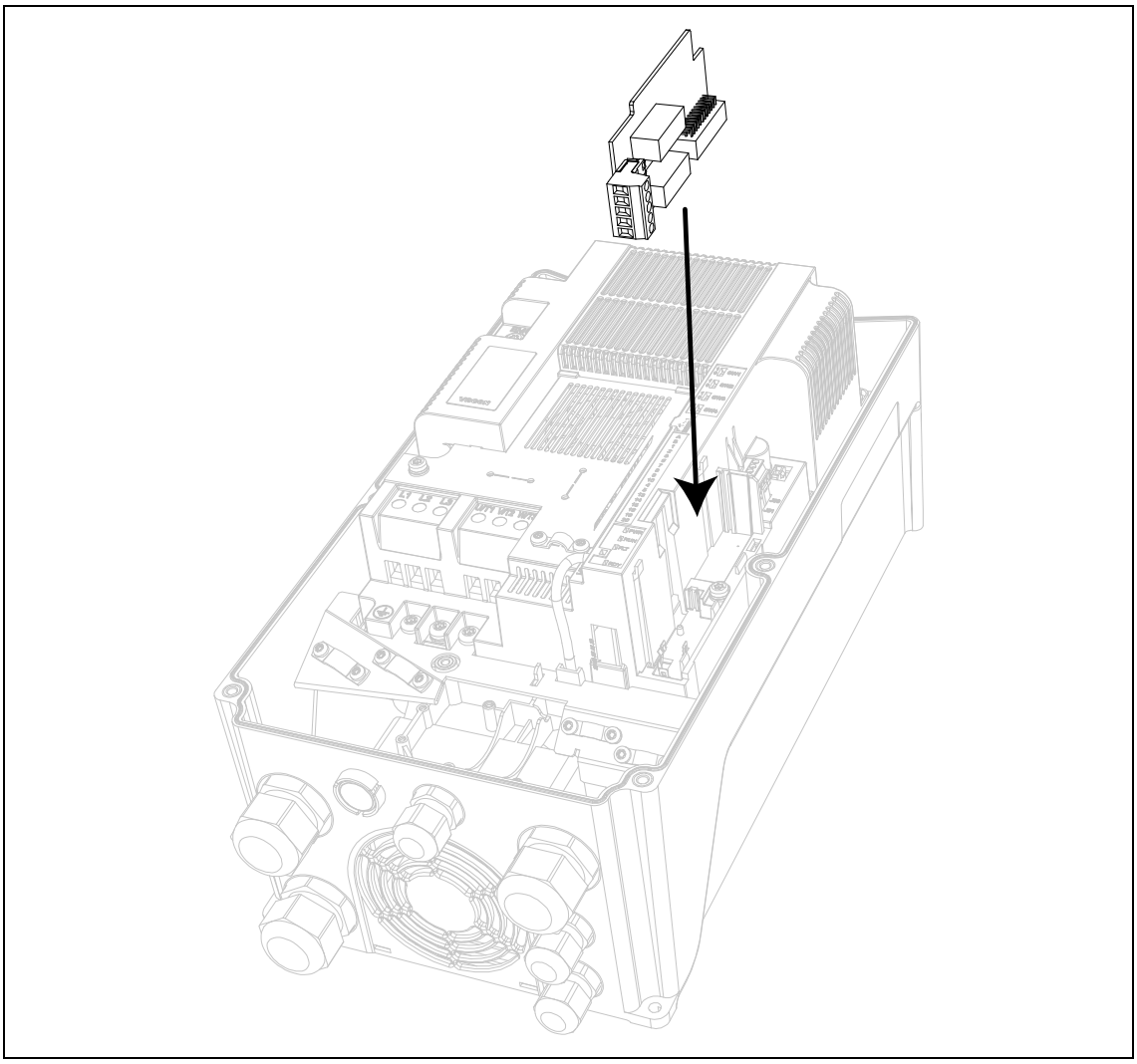

Figure 3. Option board installation.

5	• Mount the option slot cover.

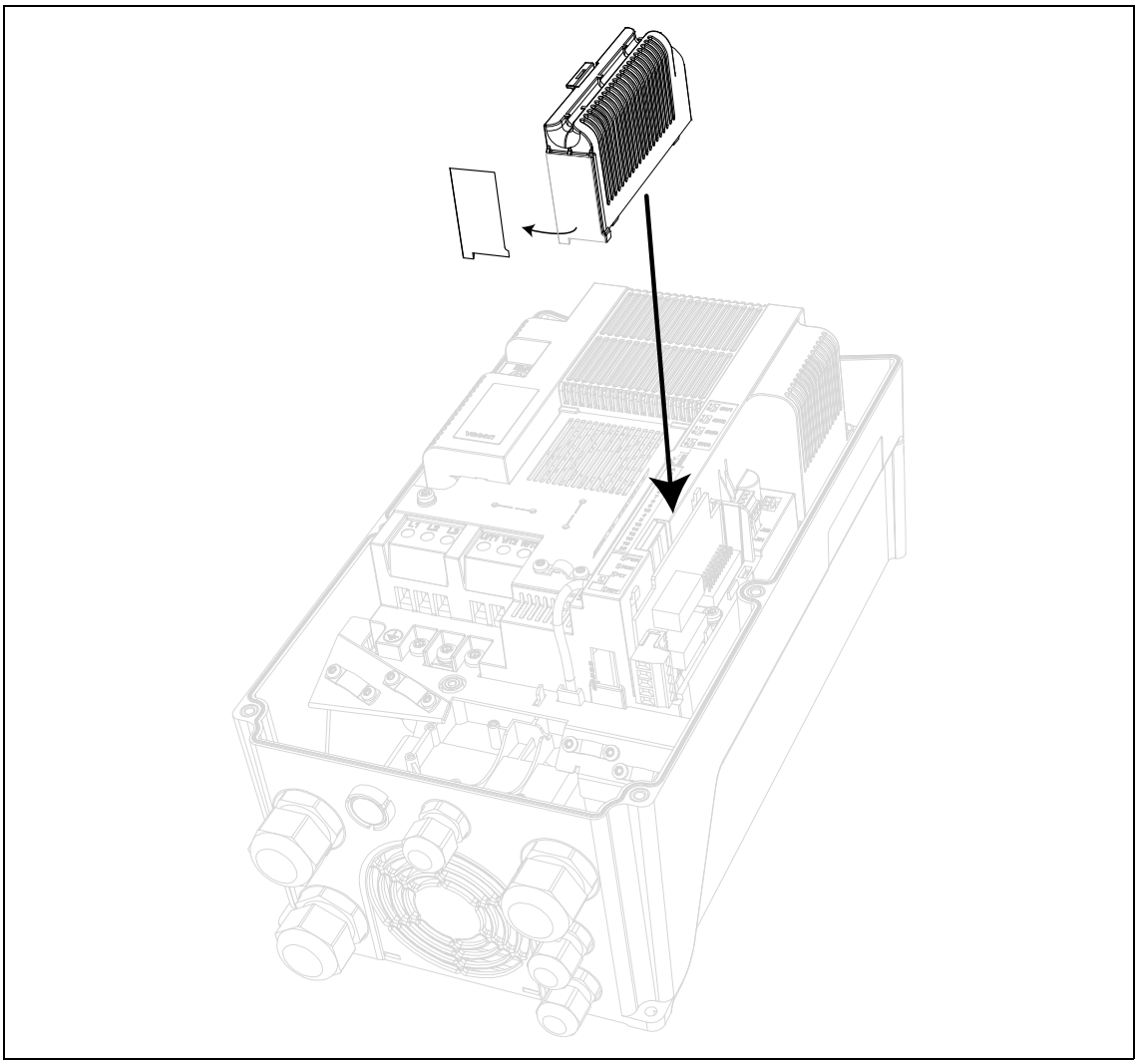

Figure 4. Mounting of option slot cover: remove the plastic opening for option board terminals.

3. Description of groups

3.1 Keypad Reference: Menu REF

This menu is automatically entered when pressing the LOC/REM keypad and shows the frequency reference in Local control mode.

The reference is also active when selected as main reference (P1.12=4) or as secondary reference (P2.15=4).

Value is limited between min frequency P1.1 and max frequency P1.2.

In Local mode, or when keypad is the active control place (P1.11=1 or P2.14=1), direction of rotation is determined with P2.23 or by pressing the left or right arrow button.

3.2 MONITOR GROUP: MENU M0N

VACON® 20 CP/X AC drive provides you with a possibility to monitor the actual values of parameters and signals as well as statuses and measurements. See Table in which the basic monitoring values are presented.

3.2.1 DRIVE MONITORS

Code	Monitoring value	Unit	ID	Description
V1.1	Output frequency	Hz	1	Output frequency to motor
V1.2	Frequency reference	Hz	25	Frequency reference to motor control
V1.3	Motor shaft speed	rpm	2	Motor speed in rpm
V1.4	Motor Current	A	3	
V1.5	Motor Torque	%	4	Calculated shaft torque
V1.6	Motor Power	%	5	Total power consumption of AC drive
V1.7	Motor Voltage	V	6	
V1.8	Motor temperature	%	9	Calculated motor temperature
V1.9	DC-link voltage	V	7	
V1.10	Unit temperature	°C	8	Heatsink temperature
V1.11	Board temperature	°C	1825	Power board temperature
V1.12	Analogue input 1	%	13	Analogue input AI1
V1.13	Analogue input 2	%	14	Analogue input AI2
V1.14	Analogue output	%	26	Analogue output
V1.15	DI1, DI2, DI3		15	Digital inputs status
V1.16	DI4, DI5, DI6		16	Digital inputs status
V1.19	RO1, RO2, DO		17	Digital outputs status
V1.21	Process variable		29	Scaled process variable See P7.10
V1.22	PID setpoint	%	20	
V1.23	PID feedback	%	21	
V1.24	PID error value	%	22	
V1.25	PID output	%	23	
V1.26	Actual Flow	litres/ min	1956	Actual flow, measured by transducer defined in P15.1
V1.27	Volume counter 1*	m^3	1955	Cumulative water volume counter.
V1.28	Volume counter 2*	m^3x10^4	1962	Cumulative water volume counter.

Table 3: Monitor values.

NOTE!	Values V1.22-25 are hidden when PID output is not used as frequency reference.
NOTE!	* The total volume of water in [m^3] is given by: V1.27 + (V1.28 x 10000).

3.2.2 SOLAR MONITORS

Code	Monitoring value	Unit	ID	Description
V2.1	Vmp Ref	V	1934	DC voltage reference for MPP regulation
V2.2	Vmp Ref correct	V	1942	Present correction on DC voltage reference (P&O + oscillation)
V2.3	Power	kW	1936	Motor shaft power
V2.4	Energy counter	MWh	1935	Counter of energy taken by the supply

Table 4. Solar motor values.

3.3 Parameter Groups: Menu PAR

The Solar Pump Application embodies the following parameter groups:

Menu and Parameter group	Description
Group Basic Parameters: Menu PAR G1	Basic settings
Group Advanced Settings: Menu PAR G2	Advanced parameter settings
Group Analogue inputs: Menu PAR G3	Analogue input programming
Group Digital inputs: Menu PAR G4	Digital input programming
Group Digital outputs: Menu PAR G5	Digital output programming
Group Analogue outputs: Menu PAR G6	Analogue outputs programming
Group Supervisions: Menu PAR G7	Prohibit frequencies programming
Group Motor Control: Menu PAR G8	Motor control and U/f parameters
Group Protections: Menu PAR G9	Protections configuration
Group Autoreset: Menu PAR G10	Auto reset after fault configuration
Group Fieldbus: Menu PAR G11	Fieldbus data out parameters
Group PID Control: Menu Par G12	PID controller parameters
Group Solar: Menu PAR G14	Solar specific parameters.
Group Flow meter: Menu PAR G15	Flow meter parameters.

Table 5. Parameter groups

Column explanations:

Code = Location indication on the keypad; Shows the operator the parameter number.
Parameter= Name of parameter
Min = Minimum value of parameter
Max = Maximum value of parameter
Unit = Unit of parameter value; Given if available
Default = Value preset by factory
ID = ID number of the parameter
Description= Short description of parameter values or its function
= The parameter may be changed only in Stop state

3.3.1 GROUP BASIC PARAMETERS: MENU PAR G1

Code	Parameter	Min	Max	Unit	Default	ID	Description
P1.1	Min frequency	0.00	P1.2	Hz	20.00	101	Minimum allowed frequency reference
P1.2	Max frequency	P1.1	320.00	Hz	50.00	102	Maximum allowed frequency reference
P1.3	Acceleration time	0.1	3000.0	s	3.0	103	Defines the time required for the output frequency to increase from zero frequency to maximum frequency
P1.4	Deceleration time	0.1	3000.0	s	3.0	104	Defines the time required for the output frequency to decrease from maximum frequency to zero frequency
P1.5	Current limit	0.2 x I_H	2 x I_H	A	I_H	107	Maximum motor current from AC drive
P1.6	Motor nominal voltage	180	500	V	400	110	Find this value U_n on the rating plate of the motor. This parameter sets the voltage at the field weakening point to 100% * U_{nMotor}. Note also used connection (Delta/Star).
P1.7	Motor nominal frequency	8.00	320.00	Hz	50.00	111	Find this value f_n on the rating plate of the motor.
P1.8	Motor nominal speed	24	20000	rpm	1440	112	Find this value n_n on the rating plate of the motor.
P1.9	Motor nominal current	0.2 x I_H	2 x I_H	A	I_H	113	Find this value I_n on the rating plate of the motor.
P1.10	Motor cos φ	0.30	1.00		0.85	120	Find this value on the rating plate of the motor
P1.11	Control Place	0	2		0	125	Run and direction control: 0 = I/O terminals 1 = Keypad 2 = Fieldbus
P1.12	Frequency reference source	0	7		0	1819	Selection of reference source: 0 = AI1 1 = AI2 2 = PID reference 3 = not used 4 = Keypad 5 = Fieldbus 6 = AI1+AI2 7 = Max Frequency
P1.13	Start function	0	1		0	505	0=Ramping 1=Flying start
P1.14	Stop function	0	2		0	506	0: coasting 1: ramp to min frequency 2: ramp to zero frequency
P1.15	Torque boost	0	1		0	109	0 = Not active 1 = Auto torque boost

Table 6. Basic parameters.

P1.16	Show parameters	0	1		0	115	0 = only Basic 1 = All groups
P1.17	Energy counter reset	0	1		0	1933	Value 1 resets energy counter V2.4.
P1.18	Volume counters reset	0	1		0	1961	Value 1 resets volume counters V1.27 and V1.28.

Table 6. Basic parameters.

3.3.2 GROUP ADVANCED SETTINGS: MENU PAR G2

Code	Parameter	Min	Max	Unit	Default	ID	Description
P2.1	Start/Stop logic	0	4		0	300	**Logic = 0:** Start sign 1 = Start Forward Start sign 2 = Start Back-ward **Logic =1:** Start sign 1 = Start Start sign 2 = Reverse **Logic = 2:** Double Start **Logic = 3:** Start sign 1 + Analogue sign **Logic = 4:** Solar only
P2.2	Preset speed 1	0.00	P1.2	Hz	10.00	105	Multistep speed 1
P2.3	Preset speed 2	0.00	P1.2	Hz	15.00	106	Multistep speed 2
P2.4	Preset speed 3	0.00	P1.2	Hz	20.00	126	Multistep speed 3
P2.9	Start acceleration time	0.1	3000.0	s	1.0	502	Time from 0 to min fre-quency
P2.14	Control place 2	0	2		0	1806	Alternative control place: 0: I/O terminals 1: Keypad 2: Fieldbus
P2.15	Frequency reference source 2	0	7		1	1820	Selection of reference source: 0 = AI1 1 = AI2 2 = PID reference 3 = not used 4 = Keypad 5 = Fieldbus 6 = AI1+AI2 7 = Max Frequency
P2.22	Stop button active	0	1		1	114	0 = Limited function of Stop button 1 = Stop button always enabled
P2.23	Keypad Reverse	0	1		0	123	Direction of motor rotation when control place is key-pad 0 = Forward 1 = Reverse
P2.24	OPTB1 Digital inputs	3	6		6	1829	Number of terminals used as digital inputs. The parameter is visible only when OPTB1 board is installed

Table 7. Advanced settings group.

NOTE!	Visibility of the group depends on P1.16. P2.18 - P2.21 are available only with Mains connected.

3.3.3 Group Analogue inputs: Menu PAR G3

Code	Parameter	Min	Max	Unit	Default	ID	Description
P3.1	AI1 signal range	0	1		0	379	0 = 0...10V / 0...20mA 1 = 2...10V / 4...20mA
P3.2	AI1 custom min	-100.00	100.00	%	0.00	380	Custom range min setting 20% = 4-20 mA/2-10 V
P3.3	AI1 custom max	-100.00	300.00	%	100.00	381	Custom range max setting
P3.4	AI1 filter time	0.0	10.0	s	0.1	378	Filter time for analogue input 1
P3.5	AI2 signal range	0	1		1	390	0 = 0...10V / 0...20mA 1 = 2...10V / 4...20mA
P3.6	AI2 custom min	-100.00	100.00	%	0.00	391	See P3.2
P3.7	AI2 custom max	-100.00	300.00	%	100.00	392	See P3.3
P3.8	AI2 filter time	0.0	10.0	s	0.1	389	See P3.4
P3.9	Star signal select	0	1		0	1810	0 = AI1 1 = AI2
P3.10	Start level	0.00	100.00	%	10.00	1857	Not scaled analogue signal If P3.10 < P3.11: Start below this level If P3.10> P3.11: Start above this level
P3.11	Stop Level	0.00	100.00	%	60.00	1856	Not scaled analogue signal If P3.11> P3.10: Stop above this level If P3.11 < P3.10: Stop below this level

Table 9. Analogue inputs group.

NOTE!	Visibility of the group depends on P1.16.

3.3.4 GROUP DIGITAL INPUTS: MENU PAR G4

Code	Parameter	Min	Max	Unit	Default	ID	Description
P4.1	Start signal 1	0	6*		1	403	Start signal 1 when control place is I/O 1 (FWD) See P2.1 for function. 0 = not used 1 = DIN1 2 = DIN2 3 = DIN3 4 = DIN4 5 = DIN5 6 = DIN6
P4.2	Start signal 2	0	6*		2	404	Start signal 2 when control place is I/O 1 (REV). See P2.1 for function. See P4.1 for selections.
P4.3	Reverse	0	6*		0	412	Independent from P2.1 See P4.1 for selections
P4.4	External fault close	0	6*		5	405	Fault if signal high See P4.1 for selections
P4.5	External fault open	0	6*		0	406	Fault is signal low See P4.1 for selections
P4.6	Fault reset	0	6*		3	414	Resets all active faults
P4.7	Run enable	0	6*		0	407	Must be on to set drive in Ready state
P4.8	Preset speed B0	0	6*		4	419	Binary selector for Preset speeds
P4.9	Preset speed B1	0	6*		0	420	Binary selector for Preset speeds
P4.14	Sel. control place 2	0	6*		0	1813	Activates control place 2 See P4.1 for selections
P4.15	Sel. freq. reference 2	0	6*		0	1814	Activates reference 2 See P4.1 for selections
P4.16	Sel. PID setpoint 2	0	6*		0	431	Activates setpoint 2 See P4.1 for selections
P4.17	Mains connected	0	6*		0	1931	Digital input is high when mains supply is connected
P4.18	Energy counter reset	0	6*		0	1932	Reset of Energy counter
P4.19	Flowmeter pulse	0	6*		5	1953	Digital input for pulse flow meter (P15.1 = 1)
P4.20	Total flow reset	0	6*		6	1957	Digital input for flow counter reset
P4.21	Minimum water level	0	6*		0	1963	Digital input for water level

Table 10. Digital inputs group.

P4.22	Minimum level logic	0	1		0	1965	Selections for minimum water level logic: 0 = water level is ok when digital input for Minimum water level is high 1 = water level is ok when digital input for Minimum water level is low The drive trips with F63 (Low water level) when water level is not ok. The fault is reset with autoreset logic of Underload (see P10.4 - 7) when level is restored. Min level signal/fault refers to level in a well from which water is taken.
P4.23	Maximum water level	0	6*		0	1966	Digital input for water level
P4.24	Maximum level logic	0	1		0	1967	Selections for maximum water level logic: 0 = water level is ok when digital input for Maximum water level is high 1 = water level is ok when digital input for Maximum water level is low The drive trips with F64 (Max water level) when water level is not ok. The fault is reset with autoreset logic of Underload (see P10.4 - 7) when level is restored. Max level signal/fault refers to level in a possible tank where pumped water is stored.

Table 10. Digital inputs group.

NOTE!	(*)The maximum value is higher when an optional board with digital inputs is installed. Parameter is automatically reset if value is greater than present limit.
NOTE!	Visibility of the group depends on P1.16.

3.3.5 GROUP DIGITAL OUTPUTS: MENU PAR G5

Code	Parameter	Min	Max	Unit	Default	ID	Description
P5.1	Relay output 1 content	0	13		1	313	Function selection for RO1: 0 = Not used 1 = Ready 2 = Run 3 = General fault 4 = General fault inverted 5 = Warning 6 = Reversed 7 = At speed 8 = Output freq. supervision 9 = Output current superv. 10 = Analogue input superv. 11 = Fieldbus 1 12 = Fieldbus 2 13 = Fault/Warning
P5.2	Relay output 2 content	0	13		2	314	See P5.1
P5.3	Digital output content	0	13		3	312	See P5.1
P5.4	Relay output 1 on delay	0.00	320.00	s	0.00	458	ON delay for relay
P5.5	Relay output 1 off delay	0.00	320.00	s	0.00	459	OFF delay for relay
P5.6	Relay output 1 inversion	0	1		0	1804	0 = no inversion 1 = inverted
P5.7	Relay output 2 on delay	0.00	320.00	s	0.00	460	See P5.4
P5.8	Relay output 2 off delay	0.00	320.00	s	0.00	461	See P5.5
P5.9	Exp. EO1 output content	0	13		0	1826	Parameter visible when a I/O expansion board is installed. See P5.1 for selection
P5.10	Exp. EO2 output content	0	13		0	1827	See P5.9
P5.11	Exp. EO3 output content	0	13		0	1828	See P5.9
P5.12	Exp. EO4 output content	0	13		0	1872	See P5.9

Table 11. Digital outputs group.

NOTE!	Visibility of the group depends on P1.16. P5.9 is visible when OPTB2,OPTB5, OPTB9 or OPTBF is installed (first relay EO1). P5.10 is visible when OPTB2 or OPTB5 is installed (second relay EO2). P5.11 is visible when OPTB5 is installed (third relay EO3). P5.12 is visible when OPTBF is installed (digital output EO4).

3.3.6 Group Analogue outputs: Menu PAR G6

Code	Parameter	Min	Max	Unit	Default	ID	Description
P6.1	Analogue output function	0	8		2	307	0 = Not used (fixed 100%) 1 = Freq. reference (0-fmax) 2 = Output freq. (0 -fmax) 3 = Motor speed (0 - Speed max) 4 = Output current (0-I_{nMotor}) 5 = Motor torque (0-T_{nMotor}) 6 = Motor power (0-P_{nMotor}) 7 = PID output (0-100%) 8 = Filedbus(0-10000)
P6.2	Analogue output minimum	0	1		0	310	0 = 0V 1 = 2V
P6.3	Analogue output scale	0,0	1000,0	%	100.0	311	Scaling factor
P6.4	Analogue output filter time	0.00	10.00	s	0.10	308	Filtering time of analogue output signal. 0 = No filtering

Table 12. Analogue outputs group.

3.3.7 GROUP SUPERVISIONS: MENU PAR G7

Code	Parameter	Min	Max	Unit	Default	ID	Description
P7.1	Frequency supervision 1	0	2		0	315	0 = not used 1 = Low limit 2 = High limit
P7.2	Frequency supervision value 1	0.00	P1.2	Hz	0.00	316	Output frequency supervision threshold value
P7.3	Current supervision value	0.00	2 x I_H	A	0.00	1811	Current supervision threshold value
P7.4	AnalogIn Supv Signal	0	1		0	356	0 = AI1 1 = AI2
P7.5	AnalogIn Supv ON level	0.00	100.00	%	80.00	357	ON threshold AI supervision
P7.6	AnalogIn Supv OFF level	0.00	100.00	%	40.00	358	OFF threshold AI supervision
P7.10	Process Source Select	0	5		2	1036	Selection of variable proportional to process: 0 = PID feedback value 1 = Output frequency 2 = Motor speed 3 = Motor torque 4 = Motor power 5 = Motor current
P7.11	Process Val Decim Digits	0	3		1	1035	Decimals on process display variable
P7.12	Process Max Value	0.0	3276.7		100.0	1034	Process display max value (it depends on P7.11: with zero decimal digit the max value is 32767; with 1 decimal digit the max value is 3276.7)

Table 13. Supervisions group.

NOTE!	Visibility of the G6 and G7 groups depends on P1.16.

3.3.8 GROUP MOTOR CONTROL: MENU PAR G8

Code	Parameter	Min	Max	Unit	Default	ID	Description
P8.1	Motor control mode(*)	0	1		0	600	0 = Frequency control 1 = Speed control
P8.2	Field Weakening Point	30.00	320.00	Hz	50.00	602	Field weakening point frequency
P8.3	Voltage at Field Weakening Point	10.00	200.00	%	100.00	603	Voltage at FWP as % of Motor nominal voltage
P8.4	U/f ratio selection(*)	0	2		0	108	0 = linear 1 = quadratic 2 = programmable
P8.5	U/f curve midpoint frequency(*)	0.00	P8.2	Hz	50.00	604	Midpoint frequency for programmable U/f curve
P8.6	U/f curve midpoint voltage(*)	0.00	P8.3	%	100.00	605	Midpoint voltage for programmable U/f curve
P8.7	Output voltage at zero frequency (*)	0.00	40.00	%	0.00	606	Voltage at 0,00 Hz as % of Motor nominal voltage
P8.8	Switching frequency	1.5	16.0	kHz	6.0	601	Switching frequency of the IGBTs
P8.11	DC braking current	0.3 x I_H	2 x I_H	A	I_H	507	Defines the current injected into the motor during DC-braking. 0 = Disabled
P8.12	DC braking time at stop	0.00	600.00	s	0.00	508	Determines if braking is ON or OFF and the braking time of the DC-brake when the motor is stopping.
P8.13	Frequency to start DC braking at ramp stop	0.10	10.00	Hz	1.50	515	The output frequency at which the DC-braking is applied.
P8.14	DC braking time at start	0.00	600.00	s	0.00	516	This parameter defines the time for how long DC current is fed to motor before acceleration starts.
P8.15	Motor stator voltage drop(*)	0.00	100.00	%	0.00	662	Voltage drop on the motor windings as % of Motor nominal voltage
P8.16	Motor Identification	0	1		0	631	0 = not active 1 = standstill identification (to activate, RUN command within 20s)
P8.17	Motor Type	0	1		0	650	0 = Induction motor 1 = Permanent magnet motor
P8.18	Disable undervoltage regulator	0	1		0	1854	0 = Enabled 1 = Disabled
P8.19	Disable switching freq regulator	0	1		0	1855	0 = Enabled 1 = Disabled
P8.20	Output Sine Filter	0	1		0	1968	0 = not present 1 = present

Table 14. Motor control group.

NOTE!	(*) Parameter is automatically set by motor identification.

NOTE!	Visibility of the group depends on P1.16.

3.3.9 GROUP PROTECTIONS: MENU PAR G9

NOTE!	Visibility of the group depends on P1.16.

Parameters of Motor thermal protection (P9.11 to P9.14 and P9.21-P9.22)

The motor thermal protection is to protect the motor from overheating. The drive is capable of supplying higher than nominal current to the motor. If the load requires this high current there is a risk that the motor will be thermally overloaded. This is the case especially at low frequencies. At low frequencies the cooling effect of the motor is reduced as well as its capacity. If the motor is equipped with an external fan the load reduction at low speeds is small.

The motor thermal protection is based on a calculated model and it uses the output current of the drive to determine the load on the motor.

The motor thermal protection can be adjusted with parameters. The thermal current I_T specifies the load current above which the motor is overloaded. This current limit is a function of the output frequency.

The thermal stage of the motor can be monitored on the control keypad display. See chapter 2.

⚠	If you use long motor cables (max. 100m) together with small drives (≤1.5 kW) the motor current measured by the drive can be much higher than the actual motor current due to capacitive currents in the motor cable. Consider this when setting up the motor thermal protection functions.
⚠	The calculated model does not protect the motor if the airflow to the motor is reduced by blocked air intake grill. The model starts from zero if the control board is powered off.

Parameters of Stall protection (P9.4 to P9.6)

The motor stall protection protects the motor from short time overload situations such as one caused by a stalled shaft. The reaction time of the stall protection can be set shorter than that of motor thermal protection. The stall state is defined with two parameters, P9.5 (*Stall time*) and P9.6 (*Stall frequency limit*). If the current is as high as the P1.5 (Current Limit) and the current limiter has reduced the output frequency below the P9.6 for the time P9.5 than the set limit the stall state is true. There is actually no real indication of the shaft rotation. Stall protection is a type of overcurrent protection.

⚠	If you use long motor cables (max. 100m) together with small drives (≤1.5 kW) the motor current measured by the drive can be much higher than the actual motor current due to capacitive currents in the motor cable. Consider this when setting up the motor thermal protection functions.

Parameters of Underload protection (P9.7 to P9.10)

The purpose of the motor underload protection is to ensure that there is load on the motor when the drive is running. If the motor loses its load there might be a problem in the process, e.g. a broken belt or a dry pump.

Motor underload protection can be adjusted by setting the underload curve with parameters P9.8 (Underload protection: Field weakening area load) and P9.9 (*Underload protection: Zero frequency load*), see below. The underload curve is a squared curve set between the zero frequency and the field weakening point. The protection is not active below 5Hz (the underload time counter is stopped).

The torque values for setting the underload curve are set in percentage which refers to the nominal torque of the motor. The motor's name plate data, parameter motor nominal current and the drive's nominal current I_L are used to find the scaling ratio for the internal torque value. If other than nominal motor is used with the drive, the accuracy of the torque calculation decreases.

⚠	If you use long motor cables (max. 100m) together with small drives (≤1.5 kW) the motor current measured by the drive can be much higher than the actual motor current due to capacitive currents in the motor cable. Consider this when setting up the motor thermal protection functions.

Code	Parameter	Min	Max	Unit	Default	ID	Description
P9.1	Response to 4mA reference fault (< 4mA)	0	4		1	700	0 = No action 1 = Warning 2 = Fault 3 = Warning if Start active 4 = Fault if Start active
P9.2	4mA fault detection time	0.0	10.0	s	0.5	1430	Time limit
P9.3	Earth fault protection	0	2		2	703	0 = No action 1 = Warning 2 = Fault
P9.4	Motor stall protection	0	2		1	709	See P9.3
P9.5	Motor stall delay	0.0	300.0	s	5.0	711	This is the maximum time allowed for a stall stage.
P9.6	Motor stall min freq.	0.10	320.00	Hz	15.00	712	For a stall state to occur, the output frequency must have remained below this limit for a certain time.
P9.7	Underload protection	0	2		2	713	See P9.3 for the fault response. See P9.23 for the underload mode. When P9.23 = 0, Underload is determined by P9.8 - P9.10. When P9.23 =1, the fault is related to P9.24.
P9.8	Underload load curve at nominal freq.	10.0	150.0	%	90.0	714	This parameter gives the value for the minimum torque allowed when the output frequency is above the field weakening point.

Table 15. Protections group.

P9.9	Underload load curve at min freq.	0.0	150.0	%	0.0	715	This parameter gives value for the minimum torque allowed with zero frequency.
P9.10	Underload time	1	300	m	20	716	This is the maximum time allowed for an underload state to exist.
P9.11	Thermal protection of the motor	0	2		2	704	See P9.3
P9.12	Motor ambient temperature	-20	100	°C	40	705	Ambient temperature in °C
P9.13	Motor cooling factor at zero speed	0.0	150.0	%	40.0	706	Defines the cooling factor at zero speed in relation to the point where the motor is running at nominal speed without external cooling.
P9.14	Motor thermal time constant	1	200	min	45	707	The time constant is the time within which the calculated thermal stage has reached 63% of its final value.
P9.15	Response to fieldbus fault	0	2		2	733	See P9.3
P9.17	Parameter lock	0	1		0	1805	Lock parameter editing. 0 = Edit enabled 1 = Edit disabled
P9.18	Response to STO disable	0	3		1	1876	0 = No action 1 = Warning 2 = Fault, not stored in history menu 3 = Fault, stored in history menu
P9.19	Response to input phase fault	0	2		0	1877	See P9.3
P9.20	Input phase fault max ripple	0	75		0	1893	Sensitivity of input phase fault detector. 0 = internal value 1 = max sensitivity -> 75 = min sensitivity
P9.21	Motor temp initial mode	0	2		0	1891	0 = start from minimum 1 = start from constant value 2 = start from last value
P9.22	Motor temp initial value	0	100	%	33	1892	Initial value(P9.21 = 1) or factor for last previous value(P9.21 = 2)
P9.23	UnderloadDetectMode	0	1		0	1950	0 = Motor Torque 1 = Flowmeter (transducer defined by P15.1)
P9.24	Minimum Flow	1	65500	litres/ min	300	1951	Value to determine underload fault if P9.23 is 1

Table 15. Protections group.

3.3.10 GROUP AUTORESET: MENU PAR G10

Code	Parameter	Min	Max	Unit	Default	ID	Description
P10.1	Automatic fault reset	0	1		0	731	0 = Disabled 1 = Enabled
P10.2	Wait time	0.10	10.0	m	1.0	717	Wait time before the first reset is executed.
P10.3	Automatic reset tries	1	10		5	759	NOTE: Total number of trials (irrespective of fault type)
P10.4	Underload reset Time 1	0.1	1200.0	m	2.0	1927	
P10.5	Underload reset Time 2	0.1	1200.0	m	30.0	1928	
P10.6	Underload reset Time 3	0.1	1200.0	m	300.0	1929	
P10.7	Underload Tries T1,T2	1	10		2	1930	

Table 16. Autoreset group.

NOTE!	Visibility of the group depends on P1.16.

3.3.11 GROUP FIELDBUS: MENU PAR G11

Code	Parameter	Min	Max	Unit	Default	ID	Description
P11.1	FB DataOut 1 Sel	0	17		0	852	Variable mapped on PD1: 0 = Output frequency 1 = Motor speed 2 = Motor current 3 = Motor voltage 4 = Motor torque 5 = Motor power 6 = DC-link voltage 7 = Active fault code 8 = Analogue AI1 9 = Analogue AI2 10 = Digital inputs state 11 = PID feedback value 12 = PID setpoint 13 = Power kW 14 = Energy 15 = Flow 16 = Volume 1 17 = Volume 2
P11.2	FB DataOut 2 Sel	0	17		1	853	Variable mapped on PD2. See P11.1
P11.3	FB DataOut 3 Sel	0	17		2	854	Variable mapped on PD3. See P11.1
P11.4	FB DataOut 4 Sel	0	17		3	855	Variable mapped on PD4. See P11.1
P11.5	FB DataOut 5 Sel	0	17		4	856	Variable mapped on PD5. See P11.1
P11.6	FB DataOut 6 Sel	0	17		5	857	Variable mapped on PD6. See P11.1
P11.7	FB DataOut 7 Sel	0	17		6	858	Variable mapped on PD7. See P11.1
P11.8	FB DataOut 8 Sel	0	17		7	859	Variable mapped on PD8. See P11.1
P11.9	FB Aux CW selection	0	5		0	1821	PDI for Aux CW 0 = Not used 1 = PDI1 2 = PDI2 3 = PDI3 4 = PDI4 5 = PDI5
P11.10	FB PID setpoint selection	0	5		1	1822	PDI for PID Setpoint See P11.9
P11.11	FB PID actual selection	0	5		2	1823	PDI for PID Feedback See P11.9
P11.12	FB AnalogueOut cntrl selection	0	5		3	1824	PDI for Analogue Out CTRL See P11.9

Table 17. Fieldbus group.

NOTE!	Visibility of the group depends on P1.16.

3.3.12 GROUP PID CONTROL: MENU PAR G12

Code	Parameter	Min	Max	Unit	Defau lt	ID	Description
P12.1	Setpoint source	0	3		0	332	0 = PID setpoint 1/2 1 = AI1 2 = AI2 3 = Fieldbus
P12.2	PID setpoint 1	0.0	100.0	%	50.0	167	Fixed setpoint 1
P12.3	PID setpoint 2	0.0	100.0	%	50.0	168	Fixed setpoint 2
P12.4	Feedback source	0	3		0	334	0 = AI2 1 = AI1 2 = Fieldbus 3 = AI1- AI2
P12.5	Feedback minimum	0.0	50.0	%	0.0	336	Value at minimum signal
P12.6	Feedback maximum	10.0	300.0	%	100.0	337	Value at maximum signal
P12.7	PID controller P gain	0.0	1000.0	%	100.0	118	If the value of the parameter is set to 100% a change of 10% in the error value causes the controller output to change by 10%.
P12.8	PID controller I-time	0.00	320.00	s	10.00	119	If this parameter is set to 1,00 second a change of 10% in the error value causes the controller output to change by 10.00%/s.
P12.9	PID controller D-time	0.00	10.00	s	0.00	132	If this parameter is set to 1,00 second a change of 10% in the error value during 1.00 s causes the controller output to change by 10.00%.
P12.10	Error value inversion	0	1		0	340	0 = Normal (Feedback < Setpoint -> Increase PID output) 1 = Inverted (Feedback < Setpoint -> Decrease PID output)
P12.11	PID error limit	0.0	100.0	%	100.0	1812	Limit on error
P12.12	Sleep frequency	0.00	200.0	Hz	0.00	1016	Drive goes to sleep mode when the output frequency stays below this limit for a time greater than that defined by parameter P12.13.
P12.13	Sleep time delay	0	3600	s	30	1017	The minimum amount of time the frequency has to remain below the Sleep level before the drive is stopped.
P12.14	Wake-up limit	0.0	100.0	%	5.0	1018	Defines the level for the PID feedback value wake-up.
P12.15	Feedback Superv. Response	0	2		2	1894	Response to feedback supervision: 0 = No action 1 = Alarm 2 = Fault
P12.16	Min feedback level	0.0	100.0	%	50.0	1895	Min variation between setpoint and feedback to activate the Feedback Superv. Response
P12.17	Min feedback time	1	300	s	8	1896	To activate Feedback Superv. Response, the variation between setpoint and feedback must have remained below P12.16 for this time.

Table 18. PID control group.

P12.18	Max feedback level	100.0	300.0	%	150.0	1897	Max variation between setpoint and feedback to activate the Feedback Superv. Response
P12.19	Max feedback time	1	300	s	8	1898	To activate Feedback Superv. Response, the variation between setpoint and feedback must have remained above P12.18 for this time.

Table 18. PID control group.

NOTE!	This group is hidden when PID output is not used as frequency reference.

3.3.13 GROUP SOLAR: MENU PAR G14

Code	Parameter	Min	Max	Unit	Defau lt	ID	Description
Start Settings							
P14.1	Start DC Voltage	400	800	V	650	1916	DV voltage threshold level to activate Run enable
P14.2	Short restart delay	0.1	5.0	m	1.0	1917	Delay time to restart
P14.3	Short restart delay tries	1	10		5	1918	Number of restart tries
P14.4	Long restart delay	6.0	30.0	m	10.0	1919	Long delay time to restart
MPPT							
P14.5	Vmp at 100% power	400	800	V	600	1920	
P14.6	Vmp at 10% power	400	700	V	540	1921	
P14.7	Panel/Motor ratio	50.00	100.00	%	100.0 0	1922	
P14.8	P gain	0.000	1.000		0.050	1923	Gain for internal PI regulator. The internal frequency reference keeps the panels working on MPP.
P14.9	I gain	0.000	1.000		0.050	1924	Integration time.
P14.10	Acceleration time	0.1	60.0	s	1.0	1925	Time from minimum to maximum frequency
P14.11	Deceleration time	0.1	60.0	s	1.0	1926	Time from maximum to minimum frequency
P14.12	P&O update time	2	6	s	3	1939	
P14.13	P&O voltage step	3	10	V	5	1940	
P14.14	P&O power variation	0.2	5.0	%	1.0	1941	
P14.15	P&O local max step	0	60	V	30	1945	
P14.16	P&O local max time	1	60	m	10	1946	
P14.17	P&O local max freq	0.00	20.00	Hz	10.00	1947	
P14.18	Damping sensitivity	5	50	V	10	1943	Amplitude of oscillation to be recognized
P14.19	Damping time	3	10	s	4	1944	Time for the oscillations on DC voltage
P14.20	Sleep in solar mode	0	1		0	1964	0 = Sleep disabled 1 = Sleep according to P12.12 and P12.13

Table 19. Solar group.

NOTE!	Visibility of the group depends on P1.16.
NOTE!	Sleep in solar mode can be managed according to P12.12 and P12.13 When P14.20 =1, the drive will stop if the output frequency is below the value in P12.12, for the time in P12.13. It will restart as after a stop due to low power. Sleep function allows to program a minimum frequency P1.1 that is below the efficient range of the pump. MPPT can reach this low value, leading to a minimum output power and avoiding to stop the drive in case of temporary reduced irradiation. If the condition persists, sleep logic will then stop the drive.

3.3.14 Group Flow meter: Menu PAR G15

Code	Parameter	Min	Max	Unit	Default	ID	Description
P15.1	Flowmeter signal	0	3		0	1958	Selections: 0 = not used 1 = Digital pulse 2 = AI1 3 = AI2
P15.2	Flow at max anlg signal	0	65500	litres/ min	1000	1960	Considered when flow meter signal is from analogue signal (AI1 or AI2). It is the flow leve at maximum analogue signal.
P14.3	Pulse output volume	0	10000	litres/ pulse	100	1954	Considered when flow meter signal is from digital input. It is the total volume of water for each pulse.

Table 20. Flow meter parameters.

3.4 System parameters, Faults and History faults: Menu FLT

Code	Parameter	Min	Max	Unit	Default	ID	Description
V1.1	API system SW ID					2314	
V1.2	API system SW version					835	
V1.3	Power SW ID					2315	
V1.4	Power SW version					834	
V1.5	Application ID					837	
V1.6	Application Ver.					838	
V1.7	System load					839	
When no fieldbus board has been installed, the following values are visible:							
V2.1	Communication status					808	Status of Modbus communication. Format: xx.yyy where xx = 0 - 64 (Number of error messages) yyy = 0 - 999 (Number of good messages)
V2.9	Last communication fault					816	The fault code related to the last counted bad messages is shown: 1 = Illegal function 2 = Illegal address 3 = Illegal data value 4 = Illegal slave device 53 = USART receive fault (parity error/ frame error/ USART buffer overflow) 90 = Receive buffer overflow 100 = Frame CRC Error 101 = Ring buffer overflow
P2.2	FB Protocol Status	0	1		0	809	0 = Not used 1 = Modbus used
P2.3	Slave address	1	255		1	810	
P2.4	Baud rate	0	8		5	811	0 = 300 1 = 600 2 = 1200 3 = 2400 4 = 4800 5 = 9600 6 = 19200 7 = 38400 8 = 57800
P2.6	Parity type	0	2		0	813	Parity type: 0 = None 1 = Even 2 = Odd Stop bit: - 2-bits with parity type "None"; - 1-bit with parity type "Even" and "Odd".
P2.7	Communication time out	0	255	s	0	814	
P2.8	Reset communication status	0	1		0	815	

Table 21. System parameters, Faults and History faults.

When OPTE6 (CANopen) option board has been installed, the following values are visible:							
V2.1	CANopen communication status					14004	
P2.2	CANopen operation mode	1	2		1	14003	
P2.3	CANopen Node ID	1	127		1	14001	
P2.4	CANopen baud rate	1	8		6	14002	
When OPTE7 (DeviceNet) option board has been installed, the following values are visible:							
V2.1	DeviceNet communication status					14014	
P2.2	Output assembly type	20	111		21	14012	
P2.3	MAC ID	0	63		63	14010	
P2.4	Baud Rate	1	3		1	14011	
P2.5	Input assembly type	70	117		71	14013	
When OPTE3/E5(Profibus) option board has been installed, the following values are visible:							
V2.1	Profibus communication sta-tus					14022	
P2.2	Fieldbus protocol					14023	
P2.3	Active protocol					14024	
P2.4	Active baud rate					14025	
P2.5	Telegram type					14027	
P2.6	Operate mode	1	3		1	14021	
P2.7	Slave address	2	126		126	14020	
When OPTEC (EtherCAT) option board has been installed, the following values are visible:							
V2.1	Version number				0		Version number of the board software
V2.2	Board status				0		Status of OPTEC board
When OPTC4 (LonWorks) option board has been installed, the following values are visible:							
P2.1	Service PIN	0			0	14217	Broadcasts a service pin mes-sage to the network.
When OPTBH option board has been installed, the following values are visible:							
P2.1	Sensor 1 type	0	6		0	14072	0 = No Sensor 1 = PT100 2 = PT1000 3 = Ni1000 4 = KTY84 5 = 2 x PT100 6 = 3 x PT100
P2.2	Sensor 2 type	0	6		0	14073	See P2.1
P2.3	Sensor 3 type	0	6		0	14073	See P2.1
Other information:							
V3.1	MWh counter					827	
V3.2	Power on day counter					828	
V3.3	Power on hour counter					829	
V3.4	RUN day counter					840	
V3.5	RUN hour counter					841	
V3.6	Fault counter					842	
V3.7	Panel parameter set status monitor						Hidden when PC is connected

Table 21. System parameters, Faults and History faults.

P4.2	Restore factory defaults	0	1		0	831	1 = Restore factory defaults for all parameters
P4.3	Password	0	9999		000 0	832	
P4.4	Time for keypad backlight	0	99	min	5	833	
P4.5	Save parameters to Keypad	0	1		0		1= Upload all parameters to Keypad Hidden when PC is connected. This function works properly only with drive supplied.
P4.6	Download parameters from Keypad	0	1		0		1= Download all parameters to Keypad Hidden when PC is connected. This function works properly only with drive supplied.
F5.x	Active fault menu	0	9				Hidden when PC is connected
F6.x	Fault history menu	0	9				Hidden when PC is connected

Table 21. System parameters, Faults and History faults.

4. Parameter description

Due to its user-friendliness and simplicity of use, the most parameters only require a basic description which is given in the parameter tables in chapter 2.2. In this chapter, you will find additional information on certain more advanced parameters. Should you not find the information you need contact your distributor.

4.1 Basic Parameters

P1.1 Min frequency

Minimum frequency reference.

NOTE: When drive is fed by solar power, if available power is not sufficient to maintain dc voltage above the minimum and frequency above the minimum, the drive will be stopped.

NOTE: if motor current limit is reached, actual output frequency might be lower than this parameter. If this is not acceptable, stall protection should be activated.

P1.2 Max frequency

Maximum frequency reference.

P1.3 Acceleration time

Ramp time, referred to variation from zero frequency to max frequency.

A specific acceleration time from zero to minimum frequency is available (P2.9).

Normal acceleration time (P1.3) is active only in case power is from mains supply.

P1.4 Deceleration time

Ramp time, referred to variation from max frequency to zero.

Normal deceleration time (P1.4) is active in mains supply and in case the external frequency reference is lowered below the reference of maximum power. It is also active when start command falls and ramping stop is programmed (stop mode is anyway by coasting, when the output frequency is below minimum).

Specific acceleration and deceleration time are used during power regulation. They are available as parameters in MPPT group, but it is suggested not to change them, unless needed because of stability issues.

P1.5 Current limit

This parameter determines the maximum motor current from the AC drive. The parameter value range differs from size to size. When the current limit is active the drive output frequency is decreased.

NOTE: This is not an overcurrent trip limit.

P1.11 Control place

Run and direction control. A second control place is programmable in P2.14.

0: I/O terminals

1: Keypad

2: Fieldbus

P1.12 FREQUENCY REFERENCE SOURCE

Defines the source of frequency reference. A second reference source is programmable in P2.15.

0: Analogue input AI1

1: Analogue input AI2

2: PID reference

3: Not used

4: Keypad

5: Fieldbus

6: AI1 + AI2

7: Max Frequency

External frequency reference is available with the usual logics.

When the drive is fed from solar panels, the external reference is used as the upper limit of the algorithm searching for maximum power. A low external reference can therefore limit the power below the maximum available.

Note! the drive will not reach the external reference, if the power from panels is not sufficient.

P1.13 START FUNCTION

0: Ramping

1: Flying start

P1.14 STOP FUNCTION

Selection number	Selection name	Description
0	Coasting	The motor is allowed to stop on its own inertia. The control by the drive is discontinued and the drive current drops to zero as soon as the stop command is given.
1	Ramp to min frequency	After the Stop command, the speed of the motor is decelerated to minimum frequency according to the set deceleration parameters.
2	Ramp to zero frequency	After the Stop command, the speed of the motor is decelerated to zero frequency according to the set deceleration parameters.

NOTE: fall of Enable signal, when configured, always determines stop by coasting.

P1.15 TORQUE BOOST

0: Not used

1: Automatic voltage boost (improves motor torque).

P1.16 SHOW PARAMETERS

0: Only Basic group (and PI Control if function is used)

1: All parameters groups are visible.

P1.17 Energy counter reset

Value 1 resets energy counter.

P1.18 Volume counters reset

Value 1 resets volume counters.

4.2 ADVANCED SETTINGS

P2.1 START/STOP LOGIC

These logics are based on Start sign 1 and Start sign 2 signals (defined with P4.1 and P4.2). Usually they are coupled to inputs DIN1 and DIN2.

Values 0...3 offer possibilities to control the starting and stopping of the AC drive with digital signal connected to digital inputs.

Selection number	Selection name	Note
0	Start sign 1: Start Forward Start sign 2: Start Backward	The function takes place when one contact is closed. If the other contact is closed while the first is still closed, the drive will stop and issue alarm A55
1	Start sign 1: Start Forward Start sign 2: Reverse	The function takes place when the contacts are closed.
2	Double Start	Run command is set when both Start 1 and Start 2 signals are high. It is reset when both the start signals are low. This can be used for a simple tank level control with hysteresis: if the tank has to be filled, two NC contact sensors will be placed at minimum and maximum levels. The drive will start below the minimum and stop above the maximum. If the tank has to be emptied, two NO contact sensors have to be used. The drive will start above the maximum and stop below the minimum.
3	Start sign 1 + Analogue	Run command is set when Start 1 signal is high and a selectable analogue input is below (or above) a programmable threshold. This can be used for a tank level control, where the analogue measurement is used for both starting the pump and controlling the speed.
4	Solar only	Run command is always active. Actual running condition is determined by DC voltage level available from the solar array.

The used stop mode is *Coasting* in all examples. See mode 0 and 1 examples in the following pages.

Selection number	Selection name	Note
0	Start sign 1: Start Forward Start sign 2: Start Backward	The function takes place when the contacts are closed.

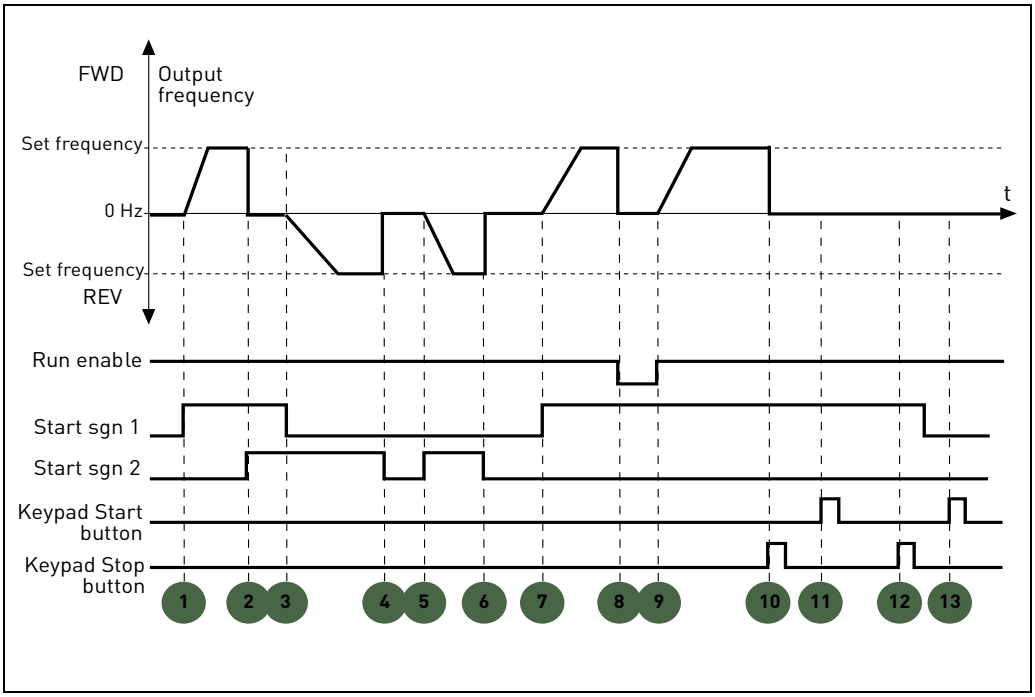

Figure 5. Start/Stop logic = 0.

Explanations:

1	Start sign 1 activates causing the output frequency to rise. The motor runs forward.	**8**	Run enable signal is set to FALSE, which drops the frequency to 0. The run enable signal is configured with parameter P4.7.
2	Start sign 2 activates causing the motor drops to 0. Warning 55 appears on the keypad.	**9**	Run enable signal is set to TRUE, which causes the frequency to rise towards the set frequency because Start sign 1 is still active.
3	Start sign 1 is inactivated which causes the direction to start changing (FWD to REV) because Start sign 2 is still active.	**10**	Keypad stop button is pressed and the frequency fed to the motor drops to 0. (This signal only works if P2.22 Keypad stop button = 1)
4	Start sign 2 inactivates and the frequency fed to the motor drops to 0.	**11**	Pushing the Start button on the keypad has no effect on the drive status.
5	Start sign 2 activates again causing the motor to accelerate (REV) towards the set frequency.	**12**	The keypad stop button is pushed again to stop the drive.
6	Start sign 2 inactivates and the frequency fed to the motor drops to 0.	**13**	The attempt to start the drive through pushing the Start button is not successful even if Start sign 1 is inactive.
7	Start sign 1 activates and the motor accelerates (FWD) towards the set frequency		

Selection number	Selection name	Note
1	Start sign 1: Start Forward Start sign 2: Reverse	The function takes place when the contacts are closed.

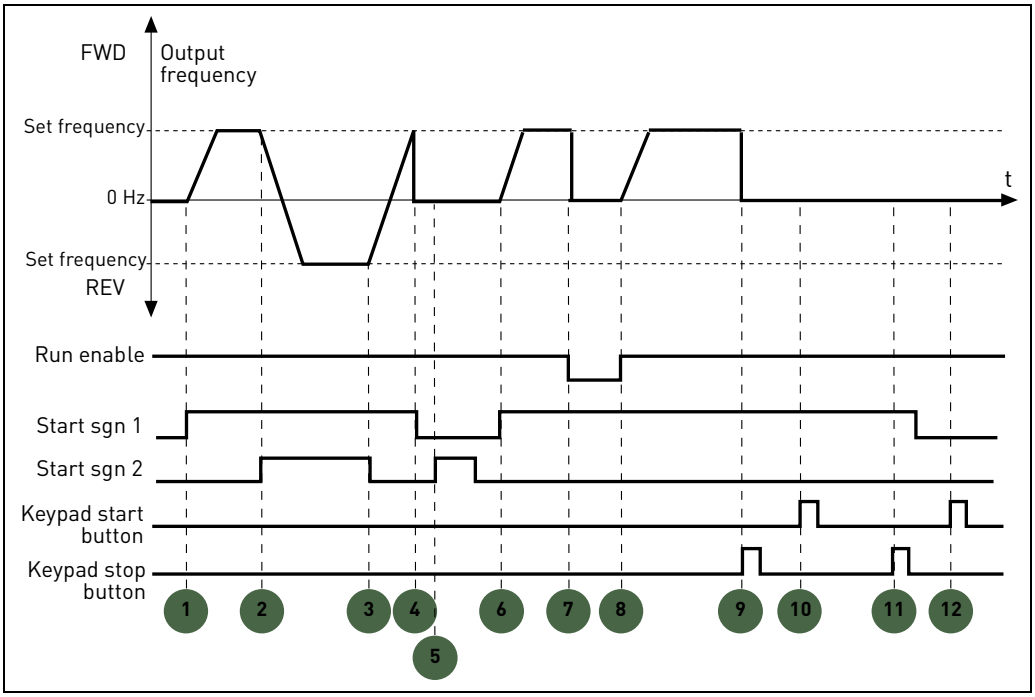

Figure 6. Start/Stop logic = 1.

Explanations:

1	Start sign 1 activates causing the output frequency to rise. The motor runs forward.	**7**	Run enable signal is set to FALSE, which drops the frequency to 0. The run enable signal is configured with parameter P4.7.
2	Start sign 2 activates which causes the direction to start changing (FWD to REV).	**8**	Run enable signal is set to TRUE, which causes the frequency to rise towards the set frequency because Start sign 1 is still active.
3	Start sign 2 is inactivated which causes the direction to start changing (REV to FWD) because Start sign 1 is still active.	**9**	Keypad stop button is pressed and the frequency fed to the motor drops to 0. (This signal only works if P2.22 Keypad stop button = Yes)
4	Also Start sign 1 inactivates and the frequency drops to 0.	**10**	Pushing the Start button on the keypad has no effect on the drive status.
5	Despite the activation of Start sign 2, the motor does not start because Start sign 1 is inactive.	**11**	The drive is stopped again with the stop button on the keypad.
6	Start sign 1 activates causing the output frequency to rise again. The motor runs forward because Start sign 2 is inactive.	**12**	The attempt to start the drive through pushing the Start button is not successful even if Start sign 1 is inactive.

P2.2 TO

P2.4 PRESET SPEED 1 TO 3

You can use the preset speed parameters to define certain frequency references in advance. These references are then applied by activating/inactivating digital inputs connected to parameters P4.8 and P4.9 (binary code). The values of the preset speeds are automatically limited between the minimum and maximum frequencies.

Required action		Activated frequency
B1	B0	Preset speed 1
B1	B0	Preset speed 2
B1	B0	Preset speed 3

Table 22. Selection of preset frequencies; ■ = input activated

P2.9 START ACCELERATION TIME

A specific acceleration time from zero to minimum frequency is available (P2.9). Normal acceleration time (P1.3) is active only in case power is from mains supply. Normal deceleration time (P1.4) is active in mains supply and in case the external frequency reference is lowered below the reference of maximum power. It is also active when start command falls and ramping stop is programmed (stop mode is anyway by coasting, when the output frequency is below minimum).

Specific acceleration and deceleration time are used when power is from solar panels. They are available as parameters in MPPT group, but it is suggested not to change them, unless needed because of stability issues.

P2.14 CONTROL PLACE 2

Alternative Run and direction control. Activated by digital input defined in P4.14.

0: I/O terminals

1: Keypad

2: Fieldbus

P2.15 FREQUENCY REFERENCE SOURCE 2

Alternative source of frequency reference. Activated by digital input defined in P4.15 or fieldbus.

0: Analogue input AI1

1: Analogue input AI2

2: PID reference

3: Not used

4: Keypad

5: Fieldbus

6: AI1+AI2

7: Max Frequency

P2.22 STOP BUTTON ACTIVE

0: Active only in keypad control mode

1: Always active

P2.23 Keypad Reverse

Effective when control is from keypad

0: Forward

1: Backward

4.3 Analogue inputs

P3.1 AI1 signal range

P3.5 AI2 signal range

Range of the electrical signal.

0: 0-100%: 0...10V or 0... 20mA

1: 20-100%: 2...10V or 4... 20mA

P3.4 AI1 filter time

P3.8 AI2 filter time

Low pass filter time constant, to reduce noise. When this parameter is given a value greater than 0 the function that filters out disturbances from the incoming analogue signal is activated.

NOTE: Long filtering time makes the regulation response slower!

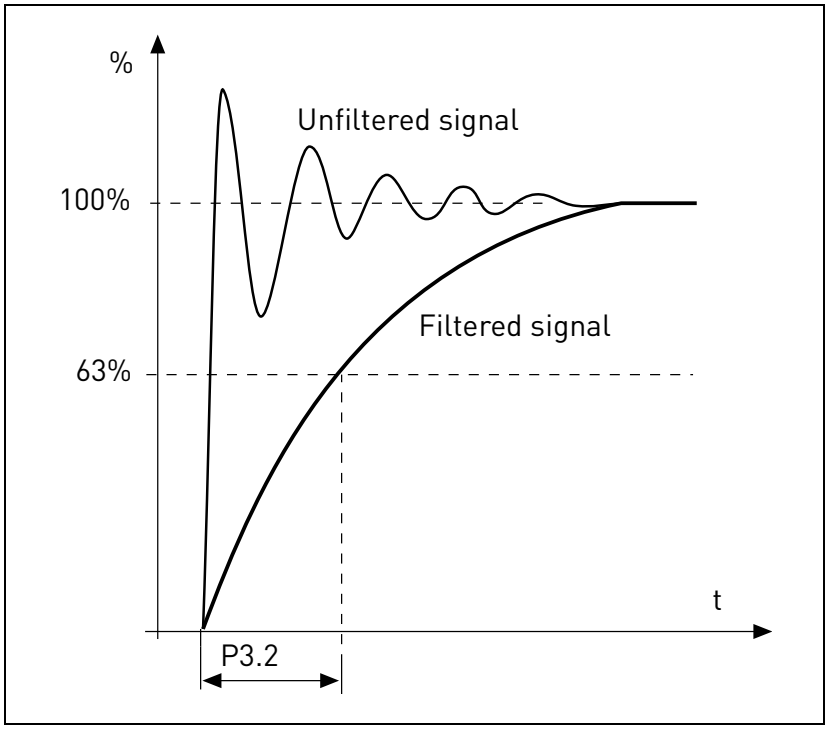

Figure 7.AI1 signal filtering.

P3.2 AI1 custom min

P3.6 AI2 custom min

Customized value for minimum signal. Effective when different than 0%

P3.3 AI1 custom max

P3.7 AI2 custom max

Customized value for maximum signal. Effective when different than 100%.

Example of custom range use with analogue input:

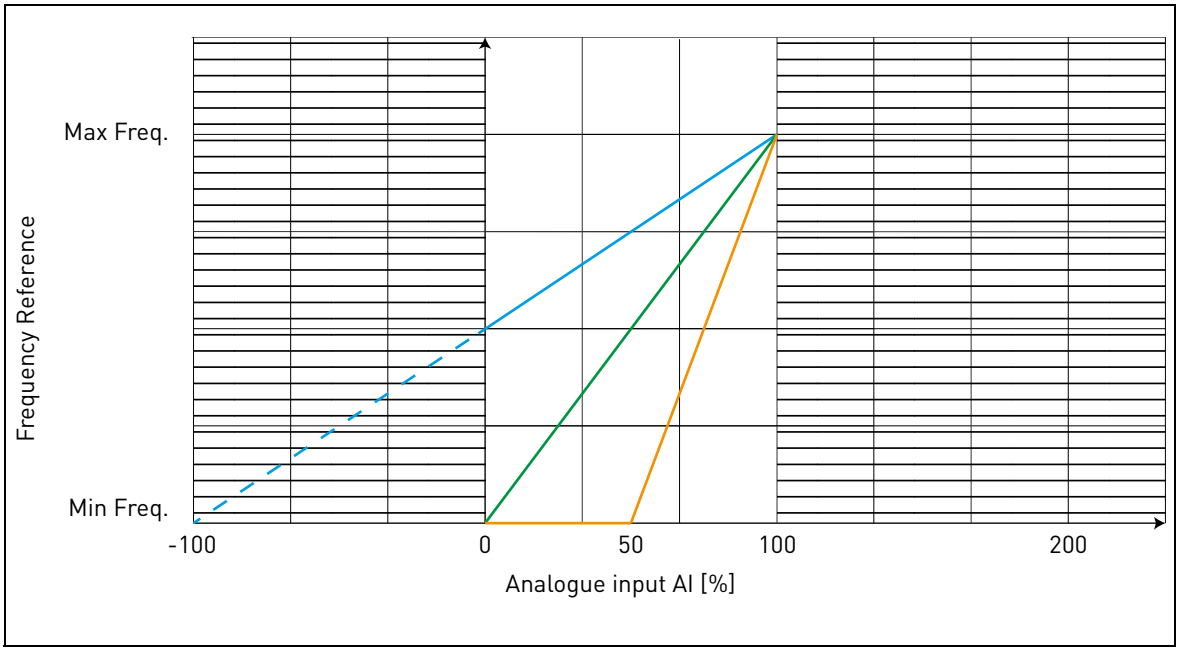

Figure 8.

Description of Figure 8.

Custom min and Custom max parameters configure the input range for analog input that will affect Frequency reference.

Blue line shows an example with Custom Min = -100% and Custom Max = 100%. This settings provides a frequency range between (Maximum frequency - Minimum frequency)/2 and Maximum frequency. With minimum analogue signal the Frequency reference is at 50% of the set frequency range (Max frequency - Min frequency)/2. With maximum analogue signal the Frequency reference is at Maximum frequency.

Green line shows the default settings of custom values: Custom Min =0% and Custom Max = 100%. This settings provides a frequency range between Minimum and Maximum frequency. With minimum analogue signal the Frequency reference is at Minimum frequency while with the maximum level is at Maximum frequency.

Orange line shows an example with Custom min = 50% and Custom Max = 100%. These settings provides a frequency range between Minimum and Maximum frequency. The Frequency reference changes linearly within the frequency range with the analogue signal between 50% and 100% of its range.

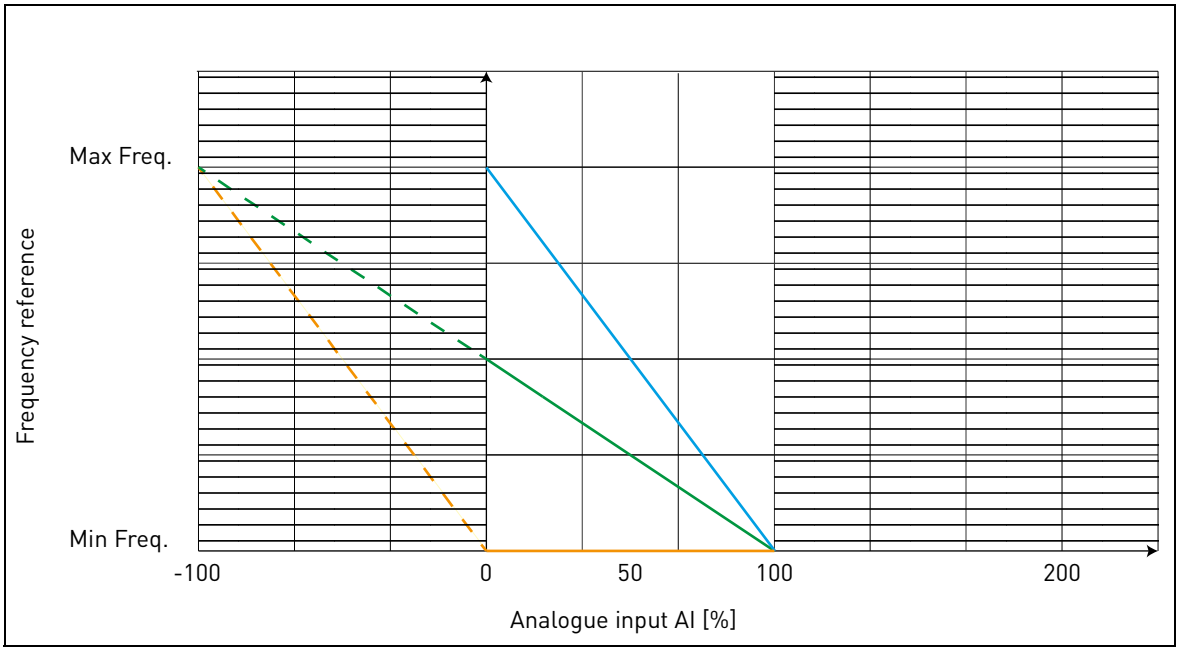

Figure 9.

Description of Figure 9:

Green line shows an example with Custom Min = 100% and Custom Max = -100%. This settings provides a frequency range between Minimum frequency and (Maximum frequency - Minimum frequency)/2. With minimum analogue signal the Frequency reference is at 50% of the set frequency range (Max frequency - Min frequency)/2, and with maximum analogue signal the Frequency reference is at Minimum frequency.

Blue line shows the inversion of the default settings of custom values: Custom Min =100% and Custom Max = 0%. This settings provides a frequency range between the Minimum frequency and the Maximum frequency. With minimum analogue signal the Frequency reference is Maximum frequency while with the maximum level is Minimum frequency.

Orange line shows an example with Custom min = -100% and Custom Max = 0%. This settings provides a frequency range between Minimum and Maximum frequency. The frequency reference is always at its minimum value (Minimum frequency) within the analogue signal range.

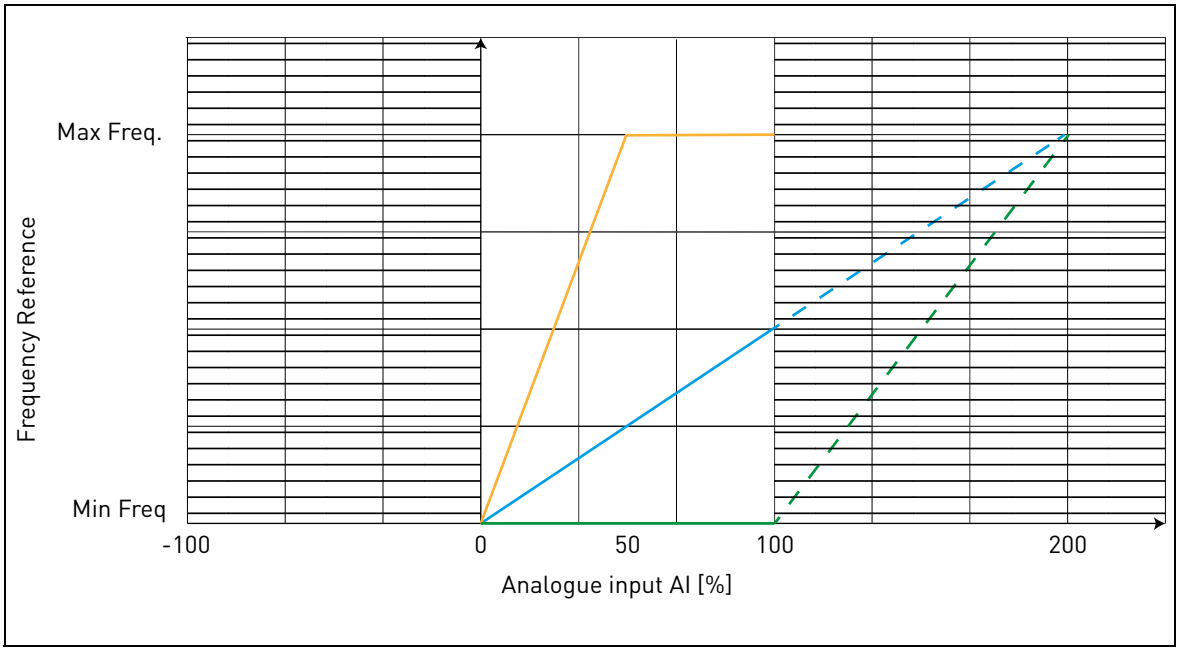

Figure 10.

Description of the Figure 10:

Blue line shows an example with Custom Min = 0% and Custom Max = 200%. This settings provides a frequency range between Minimum frequency and (Maximum frequency - Minimum frequency)/2. With minimum analogue signal the Frequency reference is at minimum value of the set frequency range (Minimum frequency), and with maximum analogue signal the Frequency reference is at (Maximum frequency - Minimum frequency)/2.

Green line shows an example with Custom Min =100% and Custom Max = 200%. This settings provides a frequency range always at Minimum frequency. The Frequency reference is at Minimum frequency within the entire analogue signal range.

Orange line shows an example with Custom min = 0% and Custom Max = 50%. This settings provides a frequency range between Minimum and Maximum frequency. The Frequency reference changes linearly within the frequency range with the analogue signal between the 0% and 50% of its range. With the analogue signal between 50% and 100% of its range, the Frequency reference is always at its maximum value (Maximum frequency).

P3.9 Start signal select

Run command is set when Start 1 signal is high and a selectable analogue input is below (or above) a programmable threshold.

This can be used for a tank level control, where the analogue measurement is used for both starting the pump and controlling the speed.

P3.10 Start level

Unscaled analogue signal

If P3.10 < P3.11:

Start below this level

If P3.10> P3.11:

Start above this level

P3.11 Stop level

Unscaled analogue signal

If P3.11> P3.10:

Stop above this level

If P3.11 < P3.10:

Stop below this level

4.4 DIGITAL INPUTS

P4.1 START SIGNAL 1

P4.2 START SIGNAL 2

Signals for start and direction. Logic is selected with P2.1.

P4.3 REVERSE

Should be used when Start signal 2 has not the meaning of reverse.

P4.4 EXTERNAL FAULT CLOSE

Fault is triggered by high digital input.

P4.5 EXTERNAL FAULT OPEN

Fault is triggered by low digital input.

P4.6 FAULT RESET

Active on rising edge.

P4.7 RUN ENABLE

Motor stops by coasting if the signal is missing.

Note: The drive is not in Ready state when Enable is low.

P4.8 PRESET SPEED B0

P4.9 PRESET SPEED B1

Digital inputs for preset speed selection, with binary coding.

P4.14 SEL. CONTROL PLACE 2

Digital input high activates control place 2 (P2.14).

P4.15 SEL. FREQ. REFERENCE 2

Digital input high activates frequency reference source 2 (P2.15).

P4.16 SEL. PID SETPOINT 2

Digital input high activates setpoint 2 (P12.3), when P12.1=0.

P4.17 MAINS CONNECTED

In case the drive is fed by mains supply, the controller knows this situation through a specific digital input.

The functions related to DC voltage (start enable, MPPT) are disabled in this condition.

P4.18 ENERGY COUNTER RESET

This parameter enables reset of Energy counter.

P4.19 FLOWMETER PULSE

Digital input for pulse flow meter (P15.1 = 1).

P4.20 FLOW COUNTER RESET

Digital input for flow counter reset.

P4.21 MINIMUM WATER LEVEL

Digital input for minimum water level.

P4.22 MINIMUM LEVEL LOGIC

This parameter selects the logic to check the status of water level due by the digital input set by P4.21. Selections:

0 = the water level is ok when digital input set by P4.21 is high

1= the water level is ok when digital input set by P4.21 is low

The drive trips with F63 fault (Low water level) when level is not ok. The fault is automatically reset with the Underload logic (see P10.4-7), when the level is restored.

Min level signal/fault refers to level in a well from which water is taken.

P4.23 MAXIMUM WATER LEVEL

Digital input for maximum water level.

P4.24 MAXIMUM LEVEL LOGIC

This parameter selects the logic to check the status of water level due by the digital input set by P4.23. Selections:

0 = the water level is ok when digital input set by P4.23 is high

1= the water level is ok when digital input set by P4.23 is low

The drive trips with F64 fault (Max water level) when level is not ok. The fault is automatically reset with the Underload logic (see P10.4-7), when the level is restored.

Max level signal/fault refers to level in a possible tank where pumped water is stored.

4.5 DIGITAL OUTPUTS

P5.1 RELAY OUTPUT 1 CONTENT

P5.2 RELAY OUTPUT 2 CONTENT

P5.3 DIGITAL OUTPUT CONTENT

Function for relays and digital output.

Selection	Selection name	Description
0	Not used	
1	Ready	The frequency converter is ready to operate
2	Run	The frequency converter operates (motor is running)
3	General fault	A fault trip has occurred
4	General fault inverted	A fault trip has **not** occurred
5	General alarm	
6	Reversed	The reverse command has been selected
7	At speed	The output frequency has reached the set reference
8	Frequency supervision	Output frequency is over/under the limit set with parameters P5.9 and P5.10
9	Current supervision	Motor current is over the limit set with parameter P5.11
10	Analogue inputs supervision	Analogue inputs selected with parameter P5.12 is over/under the limits set in P5.13 and P5.14
11	Fieldbus bit 1	Bit from fieldbus Aux Control word
12	Fieldbus bit 2	Bit from fieldbus Aux Control word
13	Fault/Warning	

Table 23. Functions for digital relays.

P5.4 RELAY OUTPUT 1 ON DELAY

P5.5 RELAY OUTPUT 1 OFF DELAY

Possible delays for ON/OFF transitions.

P5.6 RELAY OUTPUT 1 INVERSION

Inversion of relay state.

P5.7 RELAY OUTPUT 2 ON DELAY

P5.8 RELAY OUTPUT 2 OFF DELAY

Possible delays for ON/OFF transitions.

P5.9 TO

P5.12 EXPANSION EO1, EO2, EO3, EO4 OUTPUT CONTENT

These parameters are visible only when an expansion board with outputs is installed (to see table below). Relays are available on boards OPT-B2, B5, B9 and BF.

Digital outputs are available on board OPTB1, if no more than 3 terminals are used as inputs, and on OPTBF.

P5.12 is visible only when expansion board OPTBF is installed.

		OPTB1	OPTB2	OPTB5	OPTB9	OPTBF
P5.9	EO1	visible if P2.24 < 4 digital out terminal 5	visible relay terminals 21-22-23	visible relay terminals 22-23	visible relay terminals 7-8	visible relay terminals 22-23
P5.10	EO2	visible if P2.24 < 5 digital out terminal 6	visible relay terminals 25-26	visible relay terminals 25-26	-	-
P5.11	EO3	visible if P2.24 < 6 digital out terminal 7	-	visible relay terminals 28-29	-	-
P5.12	EO4	-	-	-	-	visible digital out terminal 3

Table 24. Digital outputs available with OPTB-boards

4.6 ANALOGUE OUTPUT

P6.1 ANALOGUE OUTPUT FUNCTION

Signal coupled to analogue output.

Selection	Selection name	Value corresponding to maximum output
0	Not used	output always fixed at 100%
1	Frequency reference	Max frequency(P1.2)
2	Output frequency	Max frequency(P1.2)
3	Motor speed	Motor nominal speed
4	Motor current	Motor nominal current
5	Motor torque	Motor nominal torque (absolute value)
6	Motor power	Motor nominal power (absolute value)
7	PID output	100%
8	Fieldbus control	10000

Table 25. Analogue output signals.

P6.2 ANALOGUE OUTPUT MINIMUM

0: 0V

1: 2V

P6.3 ANALOGUE OUTPUT SCALE

Scaling factor.

P6.4 ANALOGUE OUTPUT FILTER TIME

Time constant of low pass filter.

4.7 Supervisions

P7.1 Frequency supervision 1

0:No supervision

1:Low limit

2: High limit

P7.2 Frequency supervision value 1

Threshold value for frequency supervision.

P7.3 Current supervision value

Threshold value for current supervision.

P7.4 AnalogIn Supv Signal

0:AI1

1:AI2

P7.5 AnalogIn Supv ON level

Output goes high when AI is higher than this value.

P7.6 AnalogIn Supv OFF level

Output goes low when AI is lower than this value.

P7.10 Process Source Select

Monitor V1.24 can show a process value, proportional to a variable measured by the drive. Source variables are:

0: PID actual value (max: 100%)

1: output frequency (max: Fmax)

2: motor speed (max: Speed at Fmax)

3: motor torque (max: Tnom)

4: motor power (max: Pnom)

5: motor current (max: Inom)

P7.11 Process Val Decim Digits

Number of decimals shown on monitor V1.24 and also on parameter P7.12.

P7.12 Process Max Value

Value shown on V1.24 when source variable is at its maximum. Proportionality is kept if the source overtakes the maximum.

4.8 Motor control

P8.1 Motor control mode

0: Frequency control

1: Speed control (sensorless control)

In speed control, the motor slip is compensated.

Note: motor identification automatically sets this parameter to 1.

P8.2 Field weakening point

Output frequency corresponding to max voltage.

Note: if P1.7 Nominal Frequency is changed, P8.2 will be set at same value.

P8.3 Voltage at field weakening point

Motor voltage when frequency is above FWP, defined as% of nominal voltage.

Note: if P1.6 Nominal Voltage is changed, P8.3 will be set at 100%.

If the programmed maximum frequency is higher than motor nominal frequency, field weakening point is automatically set at maximum frequency and fwp voltage is set proportionally higher than 100%.

This could allow to exploit the higher voltage possibly coming from the panels.

In this situation the current limit has to be set properly, to prevent a motor overload.

If the drive is fed from mains, maximum output frequency will be limited by actual DC voltage, according to nominal U/f ratio.

P8.4 U/F RATIO SELECTION

0: linear

The voltage of the motor changes linearly as a function of output frequency from zero frequency voltage P8.7 to the field weakening point (FWP) voltage P8.3 at FWP frequency P8.2 This default setting should be used if there is no special need for another setting.

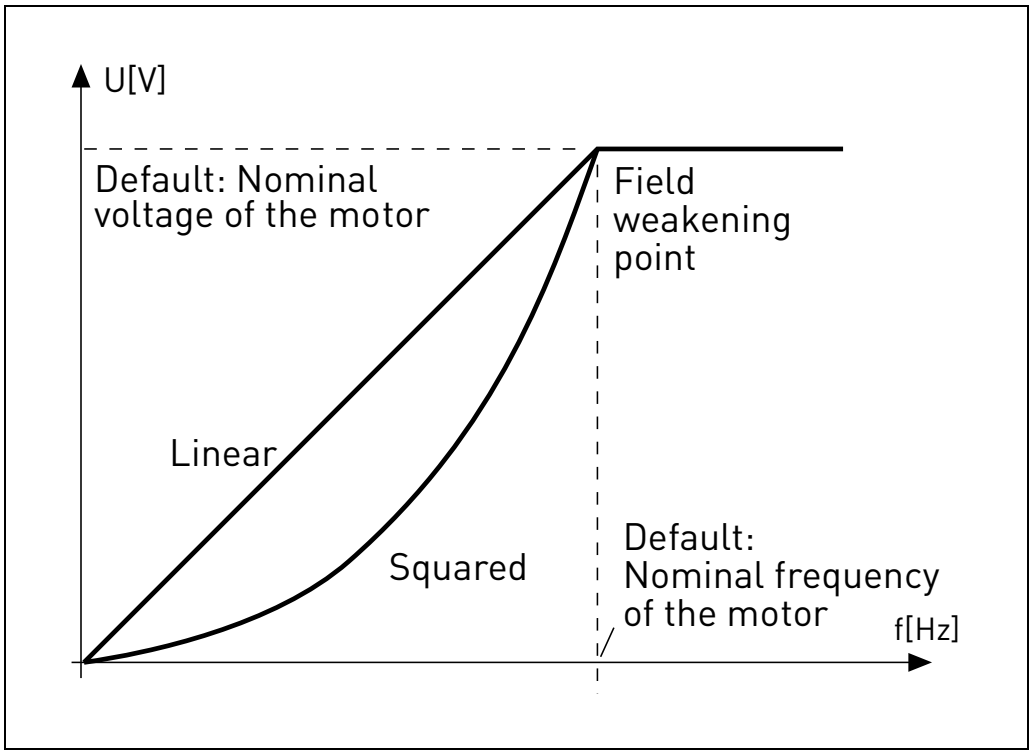

Figure 11. Linear and quadratic curve of the motor voltage.

1: quadratic

(from voltage P8.7 at 0Hz, to voltage P8.3 at P8.2 frequency)

The voltage of the motor changes from zero point voltage P8.7 following a squared curve form from zero to the field weakening point P8.3. The motor runs under-magnetized below the field weakening point and produces less torque. Squared U/f ratio can be used in applications where torque demand is proportional to the square of the speed, e.g. in centrifugal fans and pumps.

2: programmable

The U/f curve can be programmed with three different points: Zero frequency voltage P8.7 (P1), Midpoint voltage/frequencyP8.6/P8.5 (P2) and Field weakening point P8.2/P8.3 (P3).

Programmable U/f curve can be used if more torque is needed at low frequencies. The optimal settings can automatically be achieved with Motor identification run.

Note: motor identification automatically sets this parameter to 2.

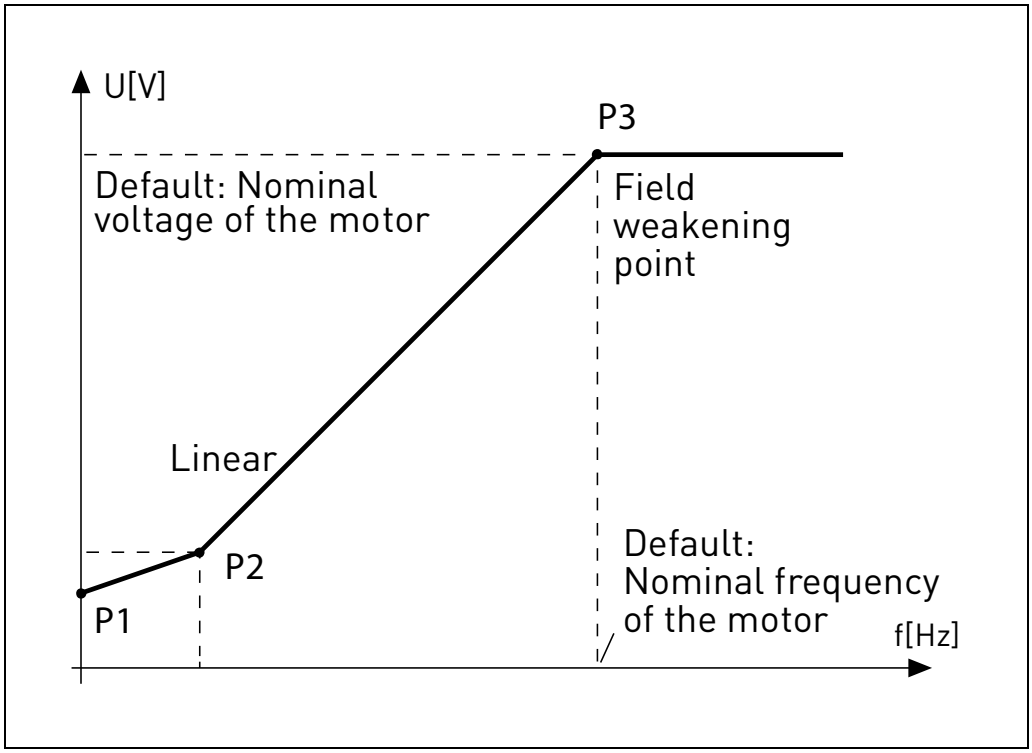

Figure 12. Programmable curve.

P8.5 U/F CURVE MIDPOINT FREQUENCY

Enabled if P8.4= 2.

Note: motor identification automatically sets this parameter.

P8.6 U/F CURVE MIDPOINT VOLTAGE

Enabled if P8.4= 2.

Note: motor identification automatically sets this parameter.

P8.7 OUTPUT VOLTAGE AT ZERO FREQUENCY

Motor voltage at frequency zero.

Note: motor identification automatically sets this parameter.

P8.8 SWITCHING FREQUENCY

PWM frequency. Values above default can cause thermal overload of the drive. Motor noise can be minimized using a high switching frequency. Increasing the switching frequency reduces the capacity of the drive. It is recommended to use a lower frequency when the motor cable is long in order to minimize capacitive currents in the cable.

P8.11 DC BRAKING CURRENT

DC current injected at start or stop.

P8.12 DC BRAKING TIME AT STOP

Time for DC current injection at stop.

P8.13 Frequency to start DC braking in ramp stop

DC current injection starts below this frequency.

P8.14 DC braking time at start

Time for DC current injection at start.

P8.15 Motor stator voltage drop

Voltage drop on stator windings, at motor nominal current, defined as% of nominal voltage. Value affects motor torque estimation, slip compensation and voltage boost.

Note: it is suggested not to program manually the value, but to perform motor identification procedure that automatically sets the value.

P8.16 Motor identification

This procedure measures motor stator resistance and automatically sets U/f characteristic, to obtain good torque also at low speed.

0 = not active

1 = standstill identification

Run command must be given and hold high within 20s after programming the value 1. The motor does not rotate and the drive will automatically exit run state at the end of the measurements.

Note: the drive exits run state only, if the measured current exceeds 55% of the motor nominal current. Procedure sets the following parameters: P8.4, P8.5, P8.6, P8.7, P8.15.

Note: optimized U/f settings will increase motor no load current to a value close to nominal in the low speed range. External cooling of the motor is needed if the motor works in this condition for significant time.

P8.18 Disable undervoltage regulator

Undervoltage regulator automatically decelerates the motor if the internal DC link voltage is too low.

0: enabled

1: disabled

P8.19 Disable switching freq. regulator

Switching frequency regulator automatically decreases the PWM frequency if the unit temperature is too high.

0: enabled

1: disabled

4.9 PROTECTIONS

P9.1 RESPONSE TO 4MA REFERENCE FAULT (AI< 4mA)

0: No action

1: Warning

2: Fault

3: Warning if Start active

4: Fault if Start active

Analogue reference below 4mA.

P9.2 4MA FAULT DETECTION TIME

Delay as filter on fault generation

P9.3 EARTH FAULT PROTECTION

0: No action

1: Warning

2: Fault

Output currents sum not zero.

P9.4 MOTOR STALL PROTECTION

0: No action

1: Warning

2: Fault

This is an overload protection. Stall is recognized by maximum motor current (=P1.5) and low output frequency.

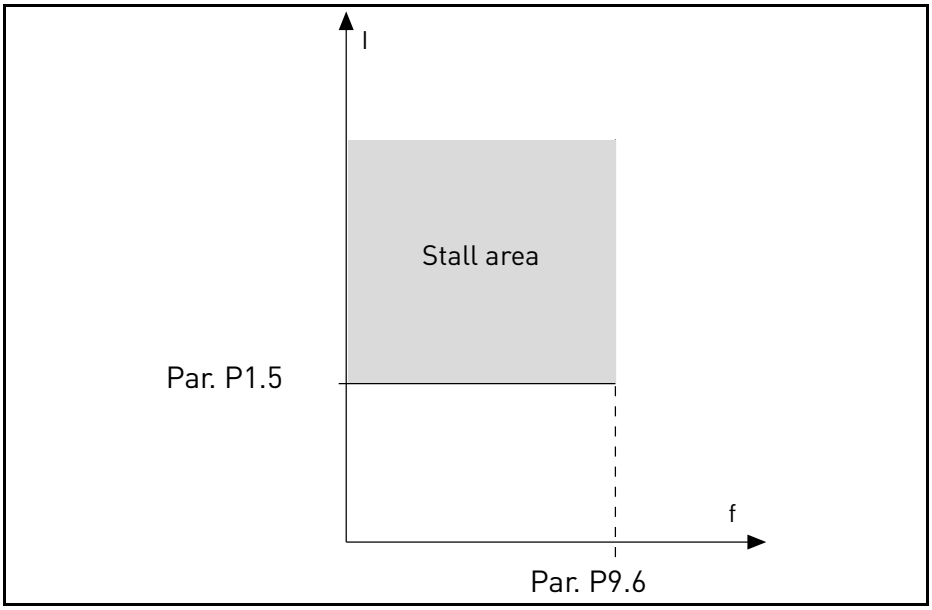

Figure 13. Stall characteristic settings.

P9.5 MOTOR STALL DELAY

This time can be set between 0.0 and 300.0 s.

This is the maximum time allowed for all stage. the stall time is counted by an internal up/down counter. If the stall time counter value goes above this limit the protection will cause a trip.

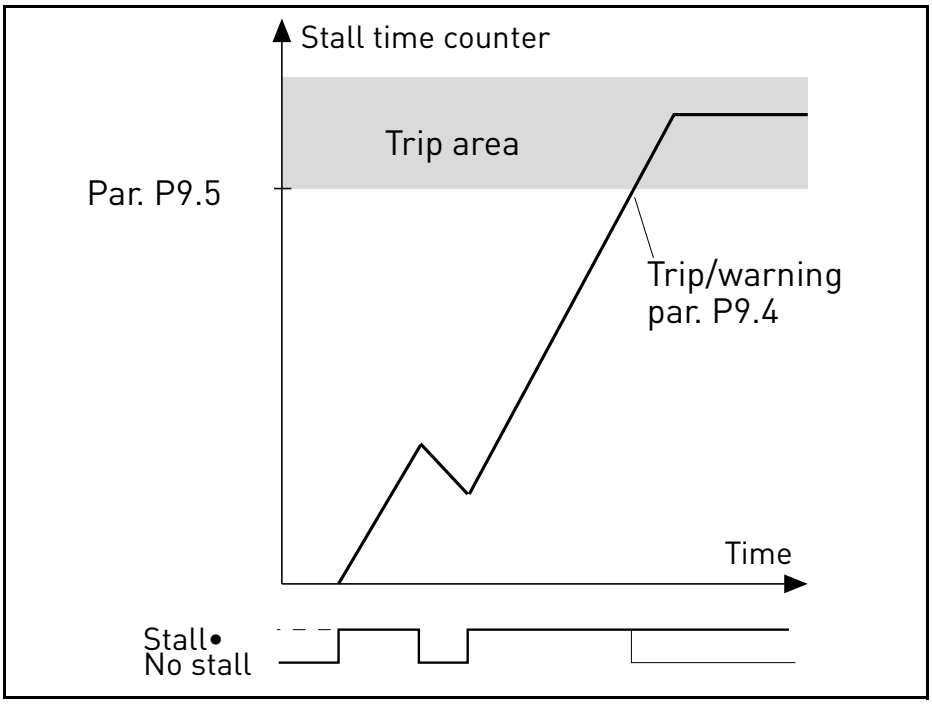

Figure 14. Stall time count.

P9.6 MOTOR STALL MIN FREQ

Stall is recognized when the current limiter has reduced the output frequency below P9.6, for the time in P9.5.

P9.7 UNDERLOAD PROTECTION

0: No action

1: Warning

2: Fault

Underload (Dry run) is recognized when torque is above the minimum curve defined by P9.8 and P9.9, for the programmed time P9.10.

The Underload mode is selected with P9.23. When P9.23 = 0, Underload is determined by parameters P9.8 - P9.10. When P9.23 =1, the fault is related to P9.24.

P9.8 UNDERLOAD LOAD CURVE AT NOMINAL FREQ

The torque limit can be set between 10.0-150.0% x T_{nMotor}.

This parameter gives the value for the minimum torque allowed when the output frequency is above the field weakening point.

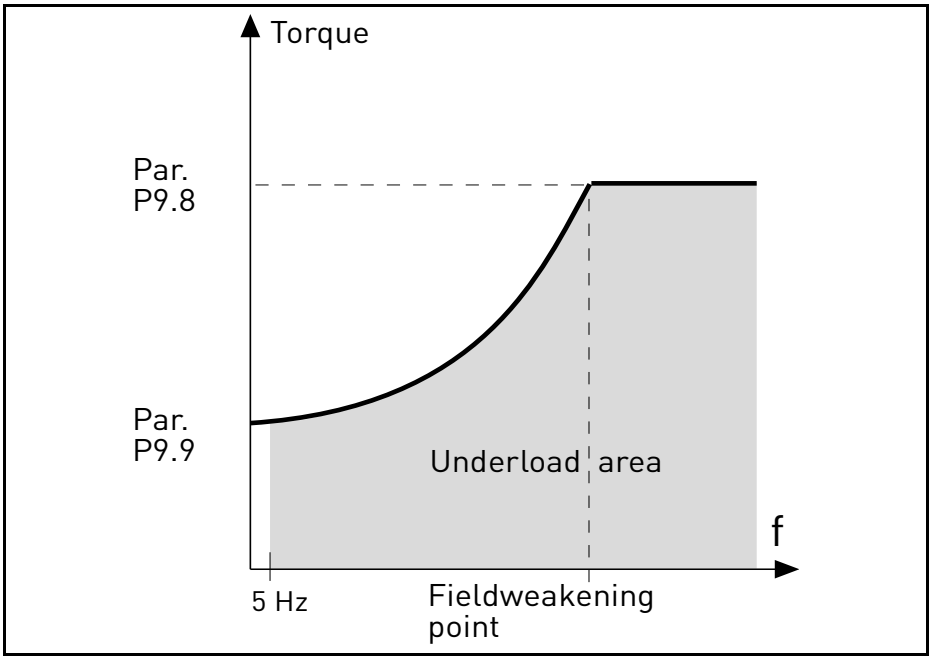

Figure 15. Underload (Dry run) characteristic settings.

P9.9 UNDERLOAD LOAD CURVE AT MIN FREQ

P9.10 UNDERLOAD TIME

Definition of minimum load at nominal and zero speed zero. Fault condition delay. This time can be set between 1.0 and 300.0 s.

This is the maximum time allowed for an underload state to exist. An internal up/down counter counts the accumulated underload time. If the underload counter value goes above this limit the protection will cause a trip according to parameter P9.7). If the drive is stopped the underload counter is reset to zero.

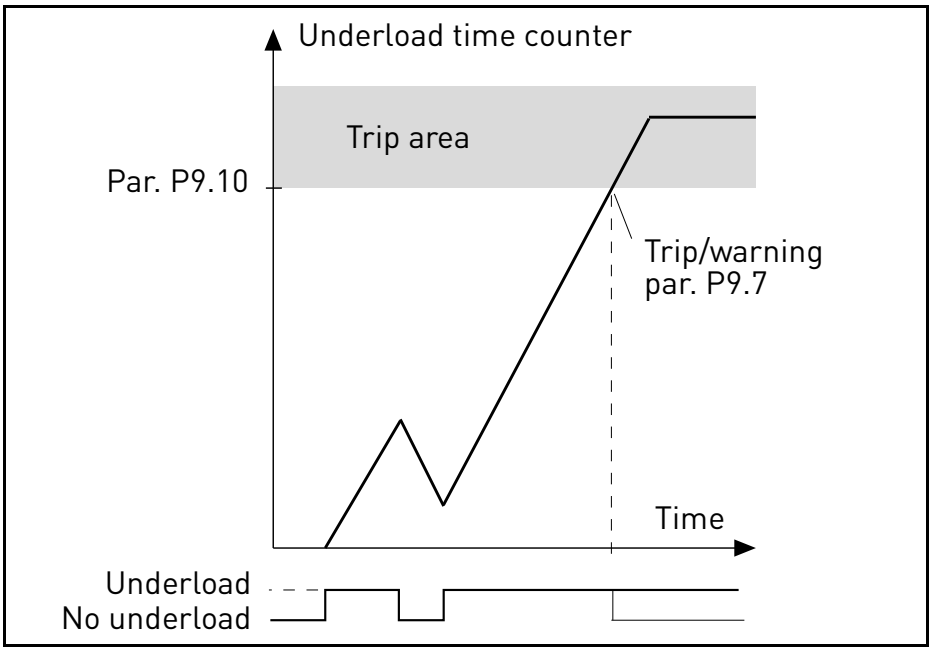

Figure 16. Underload time counter.

P9.11 THERMAL PROTECTION OF THE MOTOR

0: No action

1: Warning

2: Fault

This is a software protection, based on time integral of current.

P9.12 MOTOR AMBIENT TEMPERATURE

Change if environment is not standard.

P9.13 MOTOR COOLING FACTOR AT ZERO SPEED

Defines the cooling factor at zero speed in relation to the point where the motor is running at nominal speed without external cooling. See Figure 17.

The default value is set assuming that there is no external fan cooling the motor. If an external fan is used this parameter can be set to 90% (or even higher).

Setting this parameter does not affect the maximum output current of the drive which is determined by parameter P1.5 alone.

The corner frequency for the thermal protection is 70% of the motor nominal frequency (P1.7).

Set 100% if the motor has independent fan or cooling. Set 30-40% if the fan is on motor shaft.

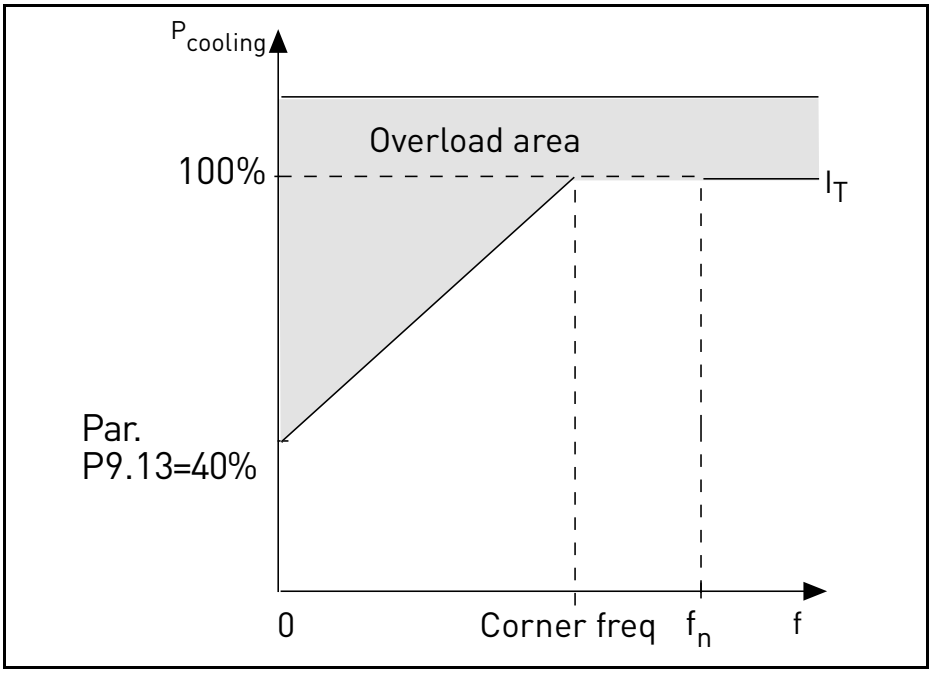

Figure 17. Motor thermal current I_T curve.

P9.14 MOTOR THERMAL TIME CONSTANT

Time at nominal current, to reach nominal temperature.

The time constant is the time within which the calculated thermal stage has reached 63% of its final value. The bigger the frame and/or slower the speed of the motor, the longer the time constant.

The motor thermal time is specific to the motor design and it varies between different motor manufacturers. The default value of the parameter varies from size to size.

If the motor's t6-time (t6 is the time in seconds the motor can safely operate at six times the rated current) is known (given by the motor manufacturer) the time constant parameter can be set basing on it. As a rule of thumb, the motor thermal time constant in minutes equals to 2*t6. If the drive is in stop stage the time constant is internally increased to three times the set parameter value. The cooling in stop stage is based on convection and the time constant is increased.

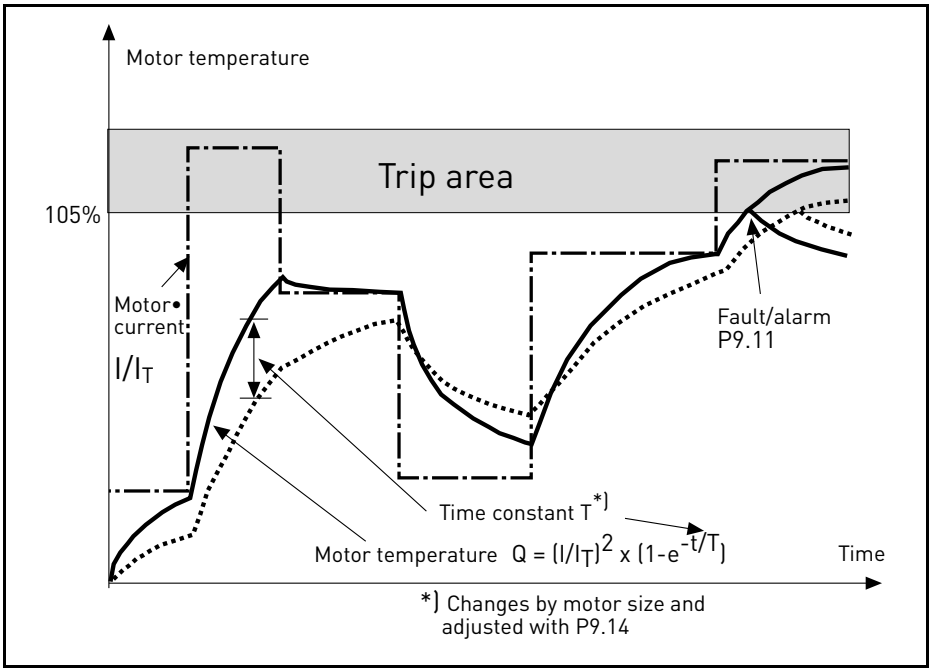

Figure 18. Motor temperature calculation.

P9.15 RESPONSE TO FIELDBUS FAULT

0: No action

1: Warning

2: Fault

Communication lost.

P9.17 PARAMETER LOCK

0: Edit enabled

1: Edit disabled

P9.18 RESPONSE TO STO DISABLE

0: No action

1: Warning

2: Fault, not stored in history

3: Fault, stored in history

Safe Torque Off disabled.

P9.19 RESPONSE TO INPUT PHASE FAULT

0: No action

1: Warning

2: Fault

Input phase missing.

P9.20 INPUT PHASE FAULT MAX RIPPLE

Sensitivity for input phases detection:

0: internal value (default)

1-75: sensitivity from maximum(1) to minimum (75)

P9.21 MOTOR TEMP INITIAL MODE

Setting of estimated motor temperature at power on

0: initialized at minimum value

1: initialized at constant value from P9.22

2: initialized at last previous value, with P9.22 used as factor

P9.22 MOTOR TEMP INITIAL VALUE

If P9.21= 1, motor temperature is initialized with this value.

If P9.21= 2, motor temperature is initialized with last previous value, multiplied by this value as% factor.

P9.23 UNDERLOADDETECTMODE

This parameter selects the underload protection mode:

0: Motor torque (standard sensorless mode based on motor torque measurement)

1: Flow meter (based on flow metersensor)

This parameter is related to parameter P9.7-P9.10.

P9.24 MINIMUM FLOW

This parameters is the threshold level to determine underload fault when P9.23 = Flow meter.

4.10 AUTORESET

P10.1 AUTOMATIC FAULT RESET

0: Disabled

1: Enabled

The automatic reset function deletes fault state when the fault cause has been eliminated and the wait time P10.2 has elapsed. Parameter P10.4 determines the maximum number of automatic resets that can be effected during the trial time set by parameter P10.3. The time count starts from the first automatic reset. If the number of faults detected during the trial time exceeds the values of trials, the fault status becomes permanent and a reset command is needed.

P10.2 WAIT TIME

Time after which the converter attempts to restart the motor automatically after the fault has been cleared.

P10.3 AUTOMATIC RESET TRIES

Trials attempted during one hour.

P10.4

P10.6 UNDERLOAD RESET TIME 1 -3

Undervoltage fault is reset without limitations, also when P10.1 is not active. The drive will restart according the delay times defined by the parameters P14.1.1 to P14.1.4.

Underload (dry run) fault is reset when P10.1 is active, without limitations in number, but according to a specific time schedule.

At first fault, autoreset is done after time 1 (P10.4). If underload fault happens again, after the number of tries defined in P10.7, delay becomes time 2 (P10.5).

Similarly, delay will change to time 3 (P10.6) if further tries are unsuccessful.

Five minutes of correct working will reset the tries counter.

Any other fault:

Generic autoreset is enabled by P10.1. Faults will be reset after the wait time (P10.2), unless the number of faults in a hour overcomes the threshold in P10.3. Any fault event, apart undervoltage and underload, causes counter increasing.

Note: fault led (red) blinks during the autoreset wait time.

P10.7 UNDERLOAD TRIES T1, T2

Trials attempted during Underload Reset time 1 and Underload Reset time 2.

4.11 Fieldbus

P11.1 to

P11.8 FB DataOut 1 - 8 sel

Parameter couples read only variables to output process data 1.

0: output frequency

1: motor speed

2: motor current

3: motor voltage

4: motor torque

5: motor power

6: DC link voltage

7: active fault code

8: analogue AI1

9: analogue AI2

10: digital inputs state

11: PID actual value

12: PID setpoint

13: Power kW

14: Energy

15: Flow

16: Volume 1

17: Volume 2

P11.9 FB Aux CW selection

Parameter defines the input process data coupled to Aux Control Word.

0: not used

1: PDI1

2: PDI2

3: PDI3

4: PDI4

5: PDI5

P11.10 FB PID setpoint selection

Parameter defines the input process data coupled to PID setpoint. Selections as P11.9.

P11.11 FB PID actual selection

Parameter defines the input process data coupled to PID actual value. Selections as P11.9.

P11.12 FB AnalogueOut cntrl selection

Parameter defines the input process data coupled to analogue output control. Selections as P11.9.

4.11.1 FIELDBUS MAPPING

4.11.1.1 Fieldbus Data IN: Master -> Slave

Modbus register	Name	Description	Range
2001	Control word(*)	Drive control	Binary coded: b0: Run b1: Reverse b2: Fault Reset (on edge) b8: forces control place to fieldbus b9: forces reference source to fieldbus
2002	General control word	Not used	
2003	Speed reference(*)	Reference	0...10000 as 0,00...100,00% of Min freq. - Max freq. range
2004	Fieldbus Data IN 1	Programmable	0...10000
2005	Fieldbus Data IN 2	Programmable	0...10000
2006	Fieldbus Data IN 3	Programmable	0...10000
2007	Fieldbus Data IN 4	Programmable	0...10000
2008	Fieldbus Data IN 5	Programmable	0...10000
2009	Fieldbus Data IN 6	Not used	-
2010	Fieldbus Data IN 7	Not used	-
2011	Fieldbus Data IN 8	Not used	-

Table 26. (*) Modbus Data inputs. They can vary depending on fieldbus used (See specific fieldbus option board installation manual).

Notes:

- CW b0 Run is acquired on edge, only if the drive is in Ready state (see Status Word b0) and actual control place is Fieldbus.
- CW b2 Fault Reset is active even if control place is not the Fieldbus.
- Fieldbus different from Modbus have their own Control Word (see manual of the specific fieldbus board).

Fieldbus data input mapping

Fieldbus Data inputs from 1 to 5 can be configured, with parameters P11.9 - P11.12, as:

Process Data IN	Description	Note
Aux Control Word	b0: enable b1: acc/dec ramp 2 selection b2: freq reference 2 selection b3: digital output 1 control b4: digital output 2 control	• b0 Enable is considered only when control place is the Fieldbus. It is computed in AND with a possible enable from digital input. Fall of enable will cause coasting stop. • b2 FreqRef2 Sel is considered only when control place is the Fieldbus. • functions related to bit1, b3 and b4 are available also when control place is not the Fieldbus. Aux CW must anyway be mapped onto a PDI, by means of parameter P11.9.
PID Setpoint	active if P12.1 = 3, range 0 - 10000 as 0 - 100,00% of regulation.	
PID Actual value	active if P12.4 = 2, range 0 - 10000 as 0 - 100,00% of regulation.	
Analogue Out Ctrl	active if P5.1 = 8, range 0 - 10000 as 0 - 100,00% of output.	

Table 27.

4.11.1.2 Fieldbus Data OUT: Slave ->Master

Modbus register	Name	Description	Range
2101	Status word(*)	Drive state	Binary coded: b0: Ready b1: Run b2: Reverse b3: Fault b4: Warning b5: Freq. reference reached b6: Zero speed
2102	General Status word	Drive state	As Status word and: b7: Control place is fieldbus
2103	Actual speed(*)	Actual speed	0...10000 as 0,00...100,00% of Min freq. - Max freq. range
2104	Fieldbus Data OUT 1	Programmable	See P11.1
2105	Fieldbus Data OUT 2	Programmable	See P11.2
2106	Fieldbus Data OUT 3	Programmable	See P11.3
2107	Fieldbus Data OUT 4	Programmable	See P11.4
2108	Fieldbus Data OUT 5	Programmable	See P11.5
2109	Fieldbus Data OUT 6	Programmable	See P11.6
2110	Fieldbus Data OUT 7	Programmable	See P11.7
2111	Fieldbus Data OUT 8	Programmable	See P11.8

Table 28. (*) Modbus data outputs. They can vary depending on fieldbus used (See specific fieldbus option board installation manual).

Notes:

- Fieldbus different from Modbus have their own Status Word (see manual of the specific fieldbus board).

4.12 PID Control

Parameters of this group are hidden unless the regulator is used as frequency reference (P1.12= or P2.15=2)

P12.1 Setpoint source

0: PID setpoint 1-2

1: analogue AI1

2: analogue AI2

3: fieldbus

P12.2 PID Setpoint 1

P12.3 PID Setpoint 2

Programmable setpoints. Setpoint 2 is activated with digital input defined in P4.16.

P12.4 Feedback source

0: analogue AI2

1: analogue AI1

2: fieldbus

3: AI2-AI1 (differential)

4: temperature (only with board OPTBH, see P13.8-10)

P12.5 Feedback minimum

P12.6 Feedback maximum

Minimum and maximum feedback values, corresponding to minimum and maximum of the signal.

P12.7 PID controller P gain

Proportional gain. If set to 100%, a variation of 10% on error causes a variation of 10% on regulator output.

P12.8 PID controller I-time

Integral time constant. If set to 1s, a variation of 10% on error will cause a variation of 10% on regulator output after 1s.

P12.9 PID controller D-time

Derivative time. If set to 1s, a variation of 10% in 1s on error causes a variation of 10% on regulator output.

P12.10 Error value inversion

0: direct control. Frequency increases if setpoint > feedback

1: inverted control. Frequency increases if setpoint < feedback

P12.11 PID Error limit

If lower than 100%, determines a limit on max error. Useful to avoid excessive reaction at motor startup.

P12.12 SLEEP FREQUENCY

This function will put the drive into sleep mode if the setpoint is reached and the output frequency stays below the sleep limit for a longer time than that set with the Sleep Delay (P12.13). This means that the start command remains on, but the run request is turned off. When the PID error value goes below, or above, the wake-up level depending on the set acting mode (P12.10) the drive will activate the run request again if the start command is still on.

P12.13 SLEEP TIME DELAY

Time of working at minimum frequency, before entering sleep condition.

P12.14 WAKE UP LIMIT

The drive exits from sleep if the error exceeds this value. Direction of regulation (P12.10) is internally considered.

P12.15 FEEDBACK SUPERV. RESPONSE

Response to feedback supervision:

0 = No action

1 = Alarm

2 = Fault

P12.16 MIN FEEDBACK LEVEL

P12.17 MIN FEEDBACK TIME

P12.18 MAX FEEDBACK LEVEL

P12.19 MAX FEEDBACK TIME

These parameters manage the supervision of the PID actual value (feedback).

If the difference between setpoint and actual value stays then lower than P12.16 for the time in P12.17, the drive response is according to P12.15. If P12.15 is 2, this activates fault F58.

If the difference between setpoint and actual value stays then higher than P12.18 for the time in P12.19, the drive response is according to P12.15. If P12.15 is 2, this activates fault F59.

4.13 Solar

4.13.1 Start Settings

P14.1 Start DC Voltage

Start enable from solar condition needs that the DC voltage is above the threshold in P14.1.1 (at least for 5s).

P14.2 Short restart delay

The drive starts and tries to reach minimum frequency. If this doesn't happen within a defined time, the drive will stop and retry only after the short delay time P14.1.2 has elapsed.

P14.3 Short restart delay tries

P14.4 Long restart delay

After a certain number of failed attempts (P14.1.3), the time between start attempts will change to long delay time P14.1.4.

If the drive can run continuously for the same long delay time, next start attempts will begin with short delay again. The same sequence is applied in case a running drive stops because of a temporary decrease in solar power.

Note! If the drive is supplied by mains, the drive is always enabled to start from external command.

4.13.2 MPPT

Generally, the MPP voltage of a panel is higher when the available power is high (good irradiation, low temperature).

The output power to the motor is considered an indicator of the panel state: if the drive can progressively increase motor speed and get a good amount of power, it means that the panel has basically "high" MPP voltage.

The DC voltage reference for the regulator is automatically changed by the MPP Tracker.

It results from four parallel algorithms:

-Feed-forward controller

-Correction controller

-Oscillation damping regulator

-Local Maxima logic

4.13.2.1 MPPT feed-forward parameters

MPP feed-forward controller continuously changes the reference from Vmp@10% to Vmp@100%, according to actual motor power. The main purpose of this term is to follow variation of irradiation.

P14.5 VMP AT 100% POWER

P14.6 VMP AT 10% POWER

The Vmp parameters should be obtained from panel characteristics, considering standard temperature and irradiation at 10% and 100% level.

If the second value is not known, subtract 50-60V from the first value as a rough estimation.

The accuracy of these values is not really critical, because the correction logic can easily compensate error of some tens of volts. It is better to set values possibly higher than the real ones, and let the correction decrease the voltage reference, to get maximum power.

P.14.7 PANEL/MOTOR RATIO

In case the solar panels have less maximum power than the motor, a value lower than 100% should be set in P14.7.

4.13.2.2 MPPT regulator

The drive tries to get the maximum power from solar panels by keeping the DC voltage at the optimum point (Max Power Point).

There is a PI regulator that changes the internal frequency reference, so that the power sent to the motor keeps the panels working on MPP.

The voltage reference can be monitored (V2.1) and compared to actual DC voltage (V1.9), to check the effect of gain tuning.

Continuous, low amplitude and high frequency oscillations mean gains too high.

Ramp times are meant to smooth the output frequency, but without introducing significant delay in response.

P14.8 P GAIN

Proportional gain [Hz/V]. If set to 1.000, a variation of 1V on DC bus voltage causes a variation of 1Hz on frequency reference

P14.9 I GAIN

Integral gain [Hz/Vxs]. If set to 1.000, a variation of 1V on DC bus voltage causes a variation of 1Hz per second on frequency reference.

P14.10 ACCELERATION TIME

Time from minimum to maximum frequency. Used only when solar power is active.

P14.11 DECELERATION TIME

Time from maximum to minimum frequency. Used only when solar power is active.

4.13.2.3 MPPT correction parameters

This algorithm changes the DC voltage reference, to compensate temperature variations (usually slow) and to correct the error in feed-forward curve.

Correction can be up to +/- 150V.

The correction term is determined by "perturb-and-observe" logic (P&O).

P14.12 P&O update time

P14.13 P&O voltage step

DC voltage reference is periodically (at intervals defined by P14.12) increased or decreased by a small value (P14.13). If the variation brings a higher motor power, next variation will follow the same direction, otherwise it will be reversed.

A short perturb period (P14.12) makes the regulation faster, assuming that the PI gains are not too low (power variation has to complete within the period).

The correction term can be monitored (V2.2), to help the tuning of reference feed-forward. When the panels temperature is close to standard, 25°C, the correction term should result small (+/- 20 to 30V).

The correction decreases towards negative maximum as temperature increases.

The correction term increases towards positive maximum in case of low temperature.

If something different is observed, feed-forward values should be improved.

P14.14 P&O power variation

P14.14 determines the variation in motor power, above which iteration of voltage reference change continues in the same direction.

Small value leads to a regulation very close to the maximum of the panel curve, with possible instability. Higher values lead to a more stable point, but with lower efficiency.

4.13.2.4 P&O in local max points

A panel with partial irradiation, or somehow defective, could cause a discontinuity on the power/ voltage curve of the array. In this situation the basic P&O logic (perturb and observe) could lead to a local maximum point, that is not corresponding to maximum available power.

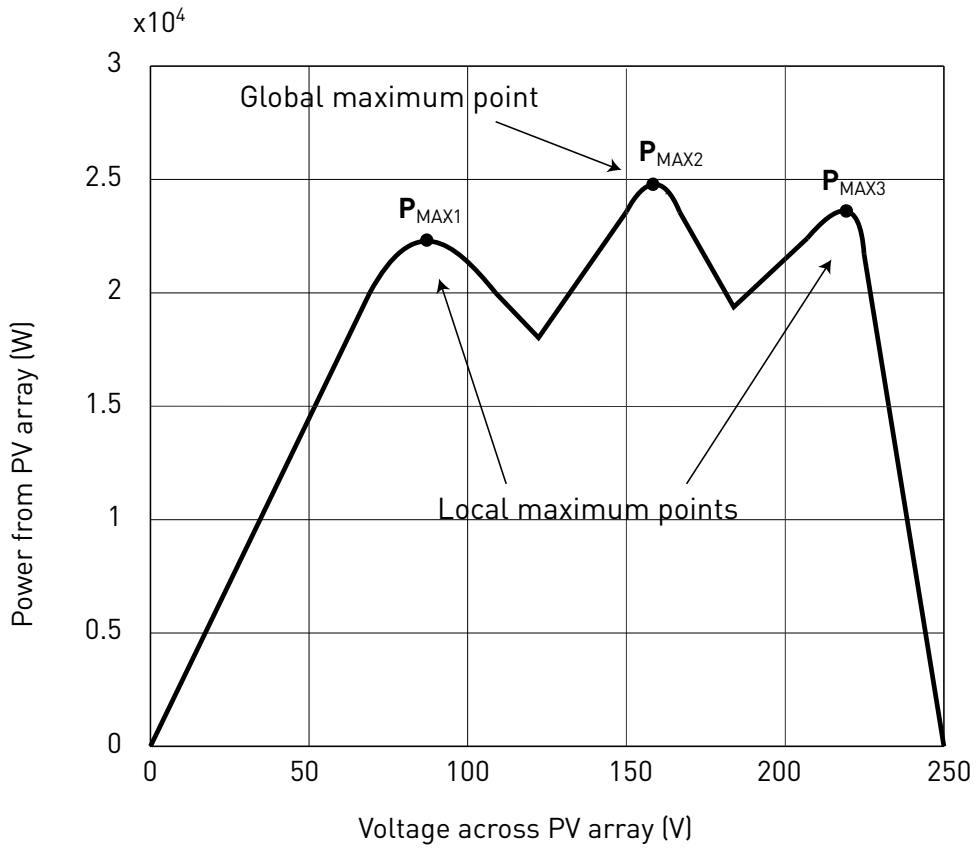

Figure 19.

P14.15 P&O LOCAL MAX STEP

To bypass discontinuity on power/voltage curve of array, after having reached a stable point, the P&O takes a bigger downward step (P14.15) in voltage. This step allows to overcome the local maximum and continue to search for the actual MPP.

If the point is the real MPP, the lower voltage reference will cause a drop in DC voltage and some oscillations, that are recognized and automatically damped by increasing the DC voltage reference.

The function can be disabled by programming P14.15= 0V.

P14.16 P&O LOCAL MAX TIME

Further attempts to reach a higher MPP after an unsuccessful attempt will follow only after the programmable masking time (P14.16).

P14.17 P&O LOCAL MAX FREQ

The downward step is done only when output frequency is above minimum frequency + P14.17.

4.13.2.5 MPPT Oscillation Damping

If the power regulation enters the “current source” branch of the panel current/voltage characteristic, the typical result is a oscillation in DC voltage and output frequency. The damping logic recognizes oscillation in DC voltage and quickly increases the voltage reference correction term. This brings the panels back in “voltage source” branch.

P14.18 Damping sensitivity

P14.18 parameter determines the amplitude of oscillation, to be recognized.

If the value is too low, normal variation in voltage level could be considered oscillation, and the DC voltage reference incorrectly increased.

P14.19 Damping time

Oscillation is recognized when the logic sees three maximum and minimum point during the time defined by P14.19.

If the time is too short, the logic could fail with slow oscillations.

If the time is too long, spaced and unrelated min and max points could be confused with an oscillation.

P14.20 Sleep in solar mode

This parameter enables or disables the sleep fuction:

0: Disabled

1: Managed with P12.12 and P12.13

When P14.20 =1, the drive will stop if the output frequency is below the value in P12.12, for the time in P12.13. It will restart as after a stop due to low power.

Sleep function allows to program a minimum frequency P1.1 that is below the efficient range of the pump. MPPT can reach this low value, leading to a minimum output power and avoiding to stop the drive in case of temporary reduced irradiation. If the condition persists, sleep logic will then stop the drive.

4.14 Flow meter

This group is to setup the flow meter sensor.

P15.1 Flow meter signal

Flow meter selection:

0: Not used

1: Digital pulse

2: AI1

3: AI2

P15.2 Flow at max anlg signal

Considered when flow meter signal is from analogue input. It is the flow value at maximum signal level of the analogue input.

P15.3 Pulse output volume

Considered when flow meter signal is from digital input. It is the total water volume for each pulse.

5. FAULT TRACING

Fault code	Fault name	Subcode	Possible cause	Remedy
1	Overcurrent		AC drive has detected too high a current (>4*I_H) in the motor cable: • sudden heavy load increase • short circuit in motor cables • unsuitable motor	Check loading. Check motor. Check cables and connections. Make identification run. Check ramp times.
2	Overvoltage		The DC-link voltage has exceeded the limits defined. • too short a deceleration time • brake chopper is disabled • high overvoltage spikes in supply • Start/Stop sequence too fast	Make deceleration time longer. Use brake chopper or brake resistor (available as options). Activate overvoltage controller. Check input voltage.
3	Earth fault		Current measurement has detected that the sum of motor phase current is not zero. • insulation failure in cables or motor	Check motor cables and motor.
8	System Fault	84	MPI communication crc error	Reset the fault and restart. Should the fault re-occur, contact the distributor near to you.
		89	HMI receives buffer overflow	Check PC-drive cable. Try to reduce ambient noise
		90	Modbus receives buffer overflow	Check Modbus specifications for time-out. Check cable length. Reduce ambient noise. Check baudrate.
		93	Power identification error	Try to reduce ambient noise. Reset the fault and restart. Should the fault re-occur, contact the distributor near to you.
		97	MPI off line error	Reset the fault and restart. Should the fault re-occur, contact the distributor near to you.
		98	MPI driver error	Reset the fault and restart. Should the fault re-occur, contact the distributor near to you.
		99	Option board driver error	Check contact in option board slot Try to reduce ambient noise; Reset the fault and restart. Should the fault re-occur, contact the distributor near to you.

Table 29. Fault codes and descriptions.

Fault code	Fault name	Subcode	Possible cause	Remedy
8	System Fault	100	Option board configuration error	Check contact in option board slot Try to reduce ambient noise; Should the fault re-occur, contact the distributor near to you.
		101	Modbus buffer overflow	Check Modbus specifications for time-out. Check cable length. Reduce ambient noise. Check baudrate.
		104	Option board channel full	Check contacts in option board slot. Try to reduce ambient noise. Should the fault re-occur, contact the distributor near to you.
		105	Option board memory allocation fail	Check contacts in option board slot. Try to reduce ambient noise. Should the fault re-occur, contact the distributor near to you.
		106	Option board Object queue full	Check contacts in option board slot. Try to reduce ambient noise. Should the fault re-occur, contact the distributor near to you.
		107	Option board HMI queue full	Check contacts in option board slot. Try to reduce ambient noise. Should the fault re-occur, contact the distributor near to you.
		108	Option board SPI queue full	Check contacts in option board slot. Try to reduce ambient noise. Should the fault re-occur, contact the distributor near to you.
		111	Parameter copy error	Check if parameter set is compatible with drive. Do not remove Keypad until copy is finished.
		113	Frequency detective timer overflow	Check keypad contacts. Try to reduce ambient noise. Should the fault re-occur, contact the distributor near to you.
		114	PC control time out fault	Do not close VACON® Live when PC control is active. Check PC-Drive cable. Try to reduce ambient noise.
		115	DeviceProperty data format	Reset the fault and restart. Should the fault re-occur, contact the distributor near to you.

Table 29. Fault codes and descriptions.

Fault code	Fault name	Subcode	Possible cause	Remedy
		120	Task stack overflow	Reset the fault and restart. Should the fault re-occur, contact the distributor near to you.
9	Undervoltage		DC-link voltage is under the voltage limits defined. • most probable cause: too low a supply voltage • AC drive internal fault • defect input fuse • external charge switch not closed **NOTE!** This fault is activated only if the drive is in Run state.	In case of temporary supply voltage break reset the fault and restart the AC drive. Check the supply voltage. If it is adequate, an internal failure has occurred. Contact the distributor near to you.
11	Output phase		Current measurement has detected that there is no current in one motor phase.	Check motor cables and motor.
13	AC drive undertemperature		Too low temperature measured in power unit's heatsink or board. Heatsink temperature is under -10°C.	Check the ambient temperature.
14	AC drive overtemperature		Too high temperature measured in power unit's heatsink or board. Heatsink temperature is over 100°C.	Check the correct amount and flow of cooling air. Check the heatsink for dust. Check the ambient temperature. Make sure that the switching frequency is not too high in relation to ambient temperature and motor load.
15	Motor stalled		Motor is stalled.	Check motor and load. Insufficient motor power, check motor stall protection parametrization.
16	Motor overtemperature		Motor is overloaded.	Decrease motor load. If no motor overload exists, check the temperature model parameters.
17	Motor underload		Motor is under loaded	Check load. Check underload protection parametrization.
19	Power overload		Supervision for drive power	Drive power is to high: decrease load.
25	Watchdog		Error in the microprocessor monitoring Malfunction Component fault	Reset the fault and restart. If the fault occurs again, please contact your closest VACON® representative.
27	Back EMF		Protection of unit when starting with rotating motor	Reset the fault and restart. Should the fault re-occur, contact the distributor near to you.
30	STO fault		Safe torque off signal does not allow drive to be set as ready	Reset the fault and restart. Should the fault re-occur, contact the distributor near to you.

Table 29. Fault codes and descriptions.

Fault code	Fault name	Subcode	Possible cause	Remedy
35	Application error	0	Firmware Interface version between Application and Control not matching	Load a compatible application. Please contact your closest VACON® representative.
		1	Application software flash error	Reload Application
		2	Application header error	Load a compatible application. Please contact your closest VACON® representative.
41	IGBT temp		IGBT temperature (UnitTemperature + I2T) too high	Check loading. Check motor size. Make identification run.
50	4 mA fault (Analog input)		Selected signal range: 4...20 mA (see Application Manual) Current less than 4 mA Signal line broken detached The signal source is faulty	Check the analog input's current source and circuit.
51	External fault		Error message on digital input. The digital input was programmed as an input for external error messages. The input is active.	Check the programming and check the device indicated by the error message. Check the cabling for the respective device as well.
52	Keypad Communication fault		The connection between the control keypad and the frequency converter is broken.	Check keypad connection and keypad cable.
53	Fieldbus communication fault		The data connection between the fieldbus master and fieldbus board is broken	Check installation and fieldbus master.
54	Fieldbus Interface error		Defective option board or slot	Check board and slot.
55	Wrong run command		Wrong run alarm and stop command	Run forward and backward are activated at the same time
56	Temperature		Temperature fault	Board OPTBH is installed and measured temperature is above (or below) the limit
57	Identification		Identification alarm	Motor identification has not been successfully completed
58	Feedback Supervision Min		The variation between setpoint and feedback is lower than min value P12.16 for the time P12.17	Check settings and parameters of this protection.
59	Feedback Supervision Max		The variation between setpoint and feedback is higher than max value P12.18 for the time P12.19	Check settings and parameters of this protection.
60	Low DC Power		The drive has stopped due to insufficient power from solar panels. The drive cannot start because DC voltage is below the threshold level P14.1.1.	Check settings.
61	Restart Delay		The drive will start after the programmed delay.	

Table 29. Fault codes and descriptions.

Fault code	Fault name	Subcode	Possible cause	Remedy
63	Low water level		The water level is not ok.	Check settings and the minimum water level status.
64	Max water level		The water level is not ok.	Check settings and the maximum water level status.
71	Unsupported		Drive is not VACON® 20X or VACON® 100X.	
72	Unsupported		Drive has not solar property.	

Table 29. Fault codes and descriptions.

VACON®

www.danfoss.com

Document ID:

DPD01601F

Rev. F

Vacon Ltd
Member of the Danfoss Group

Runsorintie 7
65380 Vaasa
Finland