VACON® NX
AC DRIVES

DESIGN GUIDE
HYBRIDIZATION

VACON®

TABLE OF CONTENTS

Document ID:DPD01887
Revision release date: 24.10.2016

1. BASICS 2
1.1 Power or energy storage 3
1.2 Battery current dimensioning 5
2. BASIC TOPOLOGIES FOR CONNECTION 6
3. SPECIAL CHARACTERISTICS AFFECTING THE SELECTION 8
3.1 Voltage window 8
3.2 Galvanic isolation requirement 11
3.3 Balance or maintenance charge 14
3.4 System control principles 15
4. CHOOSING A CORRECT TOPOLOGY 17
4.1 Allowed topology configurations 18
5. BASIC VARIANTS 19
5.1 Direct to DC 19
5.1.1 Control structure 20
5.2 DC to DC 22
5.2.1 Filter 22
5.2.2 Control Structure 34
6. PRODUCT CONFIGURATION EXAMPLES 36
6.1 Scope of delivery 36
6.1.1 Direct to DC 36
6.1.2 DC to DC 37
6.2 Example configurations 39
6.2.1 DC/DC for supply interruptions 39
6.2.2 Direct DC for Grid Support 40
7. SIZING OF THE SYSTEM AND PRODUCT 41
7.1 Direct to DC 41
7.2 DC/DC 42
8. INFORMATION TO ACQUIRE FROM CUSTOMERS 47

NOTE! You can download the English and French product manuals with applicable safety, warning and caution information from http://drives.danfoss.com/knowledge-center/technical-documentation/.

REMARQUE Vous pouvez télécharger les versions anglaise et française des manuels produit contenant l'ensemble des informations de sécurité, avertissements et mises en garde applicables sur le site http://drives.danfoss.com/knowledge-center/technical-documentation/ .

1. BASICS

The basic idea is always to achieve energy and/or power management of *Common Point of Coupling*. Typical use cases are

- time shift for production
- peak load shaving for distribution
- smoothen load for average energy
- backup power or black out start
- grid support

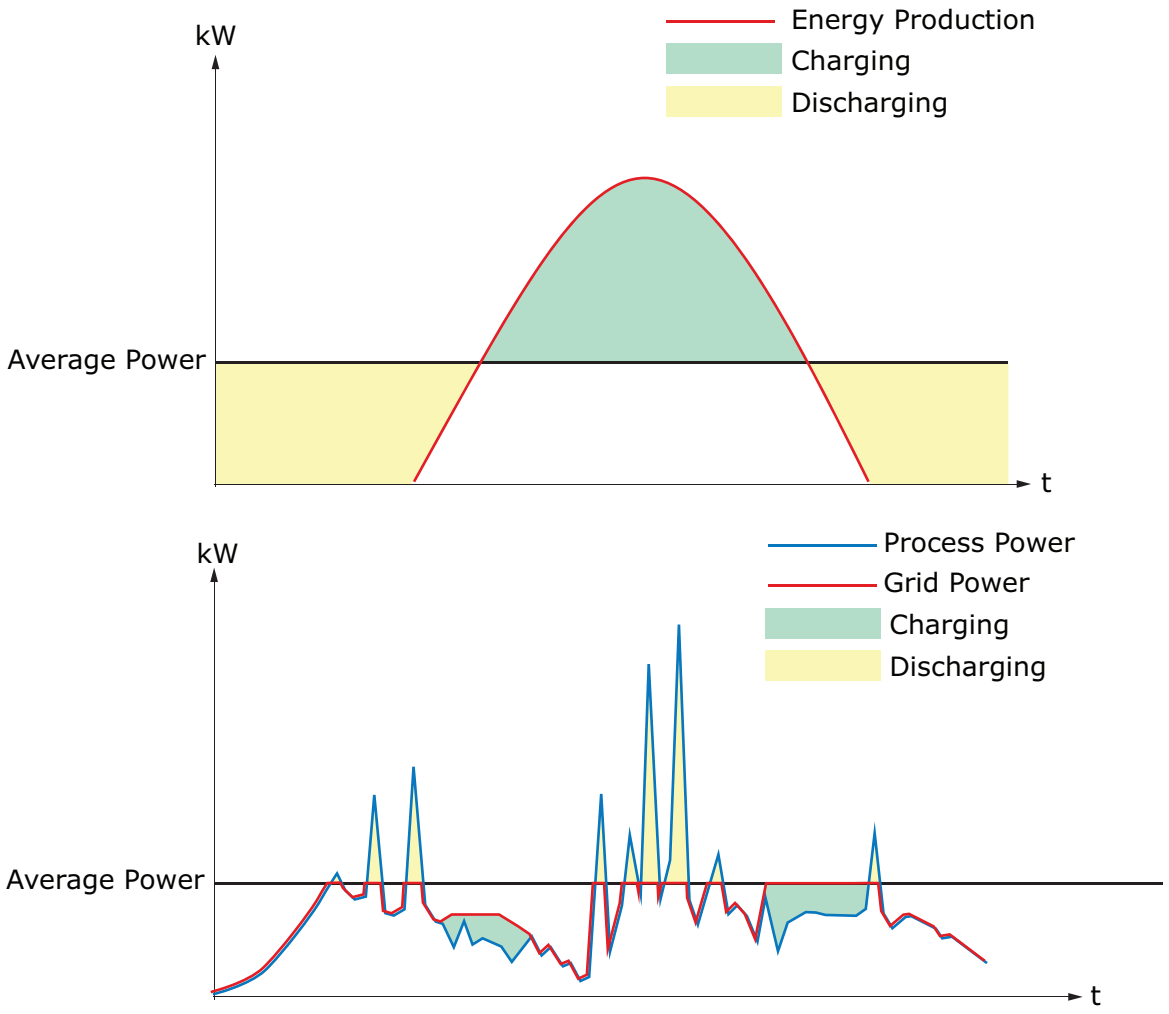

Figure 1. Power balancing

Tel. +358 (0) 201 2121 • Fax +358 (0)201 212 285

1.1 POWER OR ENERGY STORAGE

It is important to distinguish the system's "nature", that is, whether it is a power application or an energy application. Another relevant thing to note is the dynamic requirements of the application.

Determining the application:

- Energy vs. power (kW/kWh ratio)
- Dynamic requirements:
  - o Grid support functions (Harmonics, FRT)
  - o Bulk energy time shift

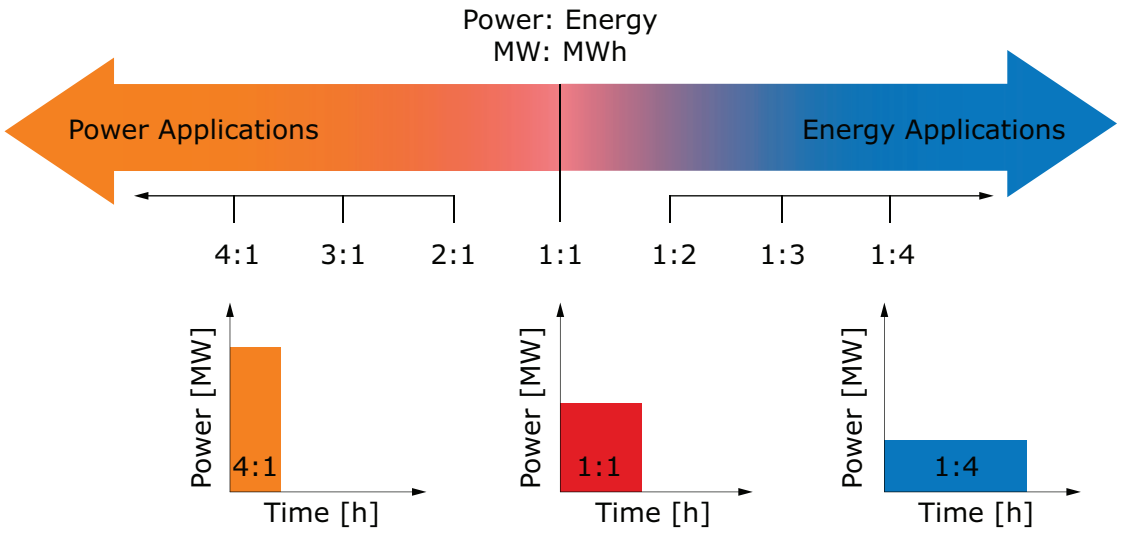

Figure 2. Power vs. energy

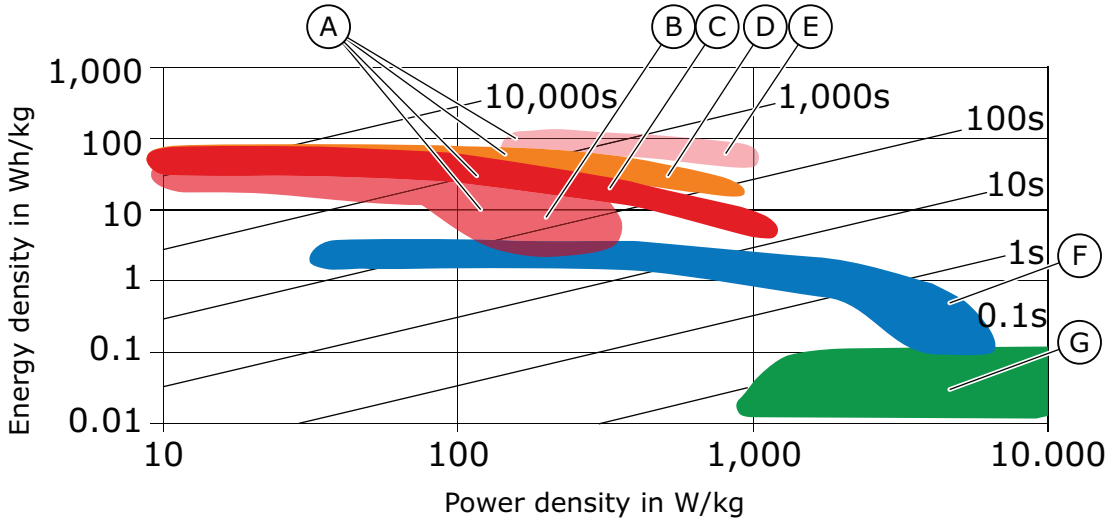

#	Reference	#	Reference
A	Batteries	E	Li-ion
B	Pb	F	Double layer capacitors
C	NiCd	G	Electrolytic capacitors
D	NiMH		

Figure 3. Comparision of battery systems

Table 1. Comparision of battery systems

Battery type	Energy density Wh/kg	Power density W/kg	Service life in cycles/years
Lead acid battery	30-50	150-300	300-1,000/3-5
Nickel-metal hybride battery	60-80	200-300	>1,000/>5
Lithium-ion battery	90-150	500 -> 2,000	>2,000/5-10
Spercaps (double layer capac.)	3-5	2,000-10,000	1,000,000/unlimited

Tel. +358 (0) 201 2121 • Fax +358 (0)201 212 285

© Electricity storage association

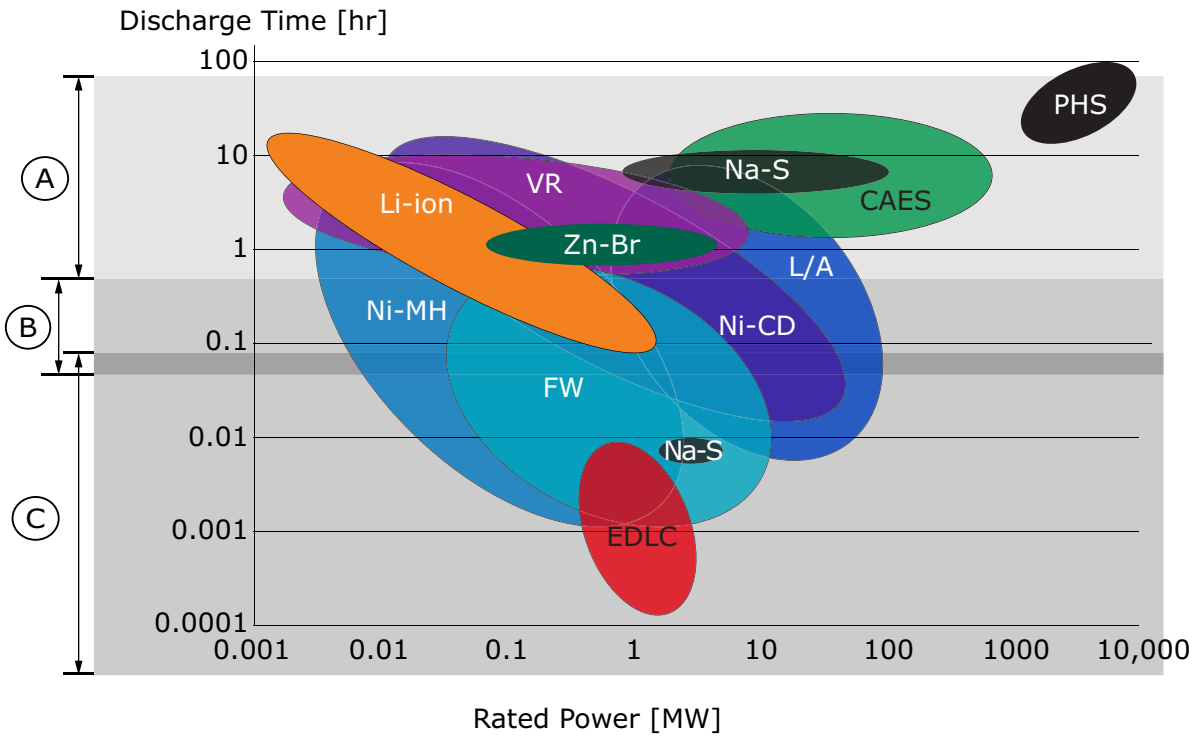

#	Reference	#	Reference
A	Energy management	Dicharge time	
B	Bridging power		
C	Power quality		
CAES	Compressed air	Ni-Cd	Nickel-cadmium
EDLC	Dbl-layer capacitors	Ni-MH	Nickel-metal hybride
FW	Flywheels	PSH	Pumped hydro
L/A	Lead-acid	VR	Vanadium redox
Li-ion	Lithium-ion	Zn-Br	Zinc-bromine
Na-S	Sodium-sulfur		

Figure 4. System ratings

1.2 BATTERY CURRENT DIMENSIONING

In a battery, the nominal current is denoted with C. For example, a 10Ah 1C current would be 10A. In some cases, the below rated currents are marked as 0.5C = C5. In that case, for example a 10Ah rated current used with a 1A current would mean 0.1C or C1. In the same example, 2C would mean 20A.

2. BASIC TOPOLOGIES FOR CONNECTION

The basic connections are divided into multible possibilities.

Table 2. Basic connections

Use case	Topology	Pros	Cons
Common DC energy storage connection	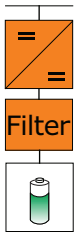	• No competitive "technology" when DC-grid connection needed • Different storage voltage/technology adaptations	
Energy storage to AC-grid with combination of DC/DC converter + grid converter	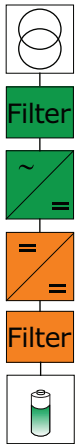	• Different storage voltage/technology adaptations • Expansion easy • Battery stack replacing due to ageing	• Large number of components • Lack of efficiency • Size
Energy storage directly to AC-grid with grid converter	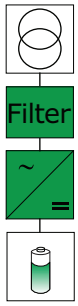	• Small number of components • Efficiency • Size • Power vs. energy dimensioning is independent from each other	• Expansion difficult • Battery stack replacing due to ageing
Energy storage close to load and AC-grid with DC/DC converter connected between DC-link and storage	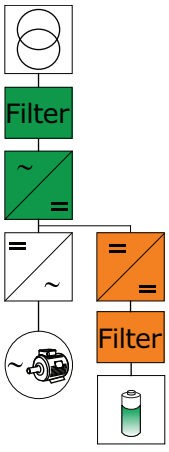	• Load power/ energy support close the consumption • Different storage voltage/technology adaptations • Expansion easy • Battery stack replacing due to ageing	• Large number of components • Size

Tel. +358 (0) 201 2121 • Fax +358 (0)201 212 285

Energy storage close to load and AC-grid with direct DC-link connection	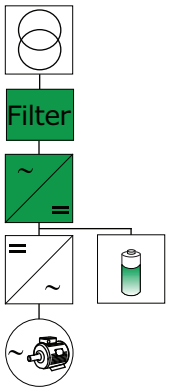	• Load power/ energy support close the consumption • Large number of components • Efficiency • Size • Power vs. energy dimensioning is independent from each other	• Voltage window limiting the scope only in range of 400 Vac using DC range 600-1100 Vdc • System expansion later with additional batteries difficult

3. SPECIAL CHARACTERISTICS AFFECTING THE SELECTION

Different chemistry causes different behavior in cell voltage as a function of charge/discharge and SOC (State of Charge). This creates "voltage window" requirement similar to the solar inverter.

Galvanic isolation requirement is different from many industrial drive application. This is due to the fact that the battery system should not be predisposed for common mode voltage.

For the Battery Management System (BMS) to be able to reset the SOC calculation, it is necessary to charge the battery to 100% SOC. This ensures that BMS is able to calculate SOC accurately and maintain the battery in safe operating area. For this, a balance charger or a maintenance charger is needed in some cases.

3.1 VOLTAGE WINDOW

For both the DC/DC converter and the GTC (Grid Tie Converter) the first dimensioning question comes from energy storage (battery) voltage dimensioning. It is important to define the "voltage window" for empty and full battery cell voltage. Depending on battery chemistry the ratio can be full/empty = 1,2... 2... (meaning, for example, full being 1000 Vdc, and empty being from 800 Vdc to 500 Vdc) and for super capacitors even bigger. Especially for GTC this is a limiting factor. The limitations come from minimum tolerable DC-link voltage to maintain controllable grid voltage and from maximum allowed voltage to maintain within design criterion of the hardware.

The behavior of voltage stretch in a battery can be illustrated with a spring being pulled or pushed.

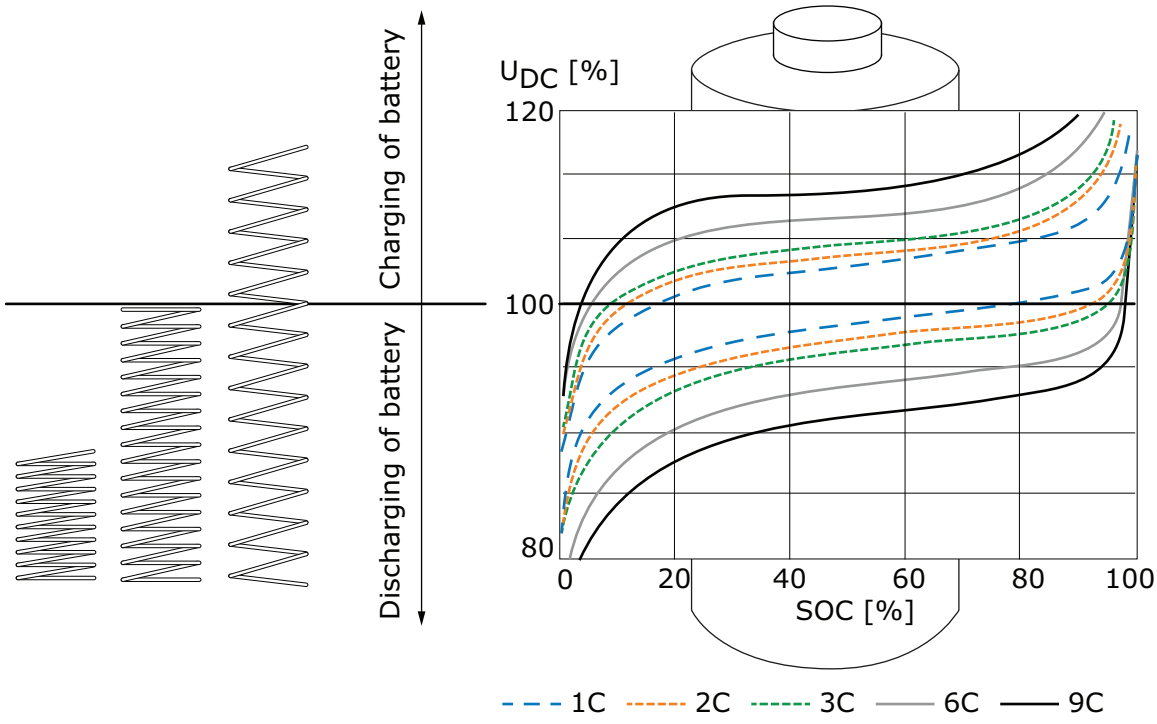

Figure 5. Spring analogy of the battery voltage change

Tel. +358 (0) 201 2121 • Fax +358 (0)201 212 285

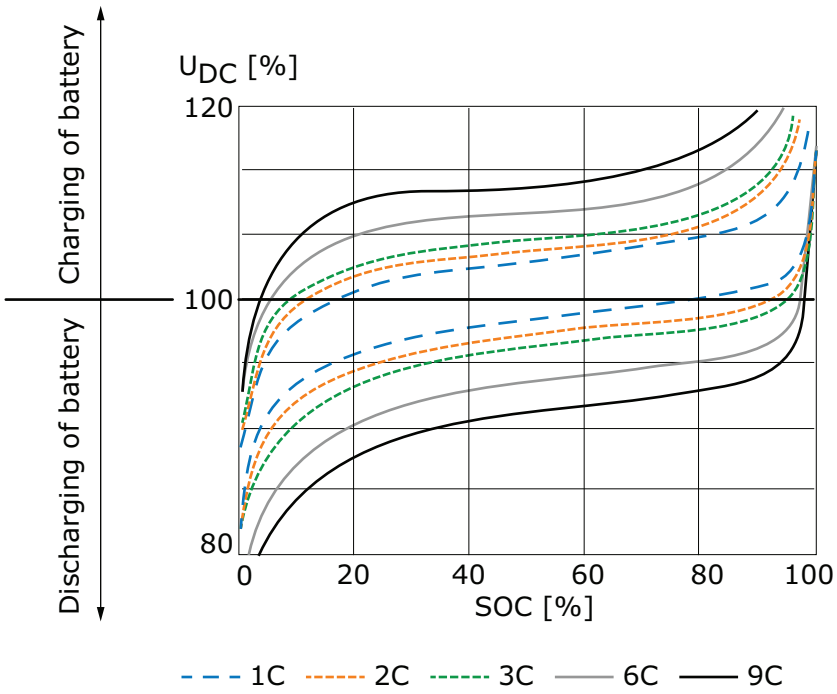

Figure 6. Battery voltage change as a function of State Of Charge (SOC)

The voltage window is important also from the process dynamics point of view. If we expect the battery system to take energy (either discharge or charge), we create change in voltage of the battery. The voltage controller needs to be capable to change the actual voltage of the battery in a controlled way from full to empty value or from empty to full value. For example, if the battery is wanted to be discharged in 30 s - 300V voltage window from 1000 Vdc - 700 Vdc it means roughly 10 V/s voltage change of rate. This is huge difference in comparison to for example case where discharge time is longer, say 30 min resulting in 0,2 V/s. This way the SOC (State of Charge) behavior is observed.

Below is a case where same sized of DC-power units are charged/discharged from the battery.

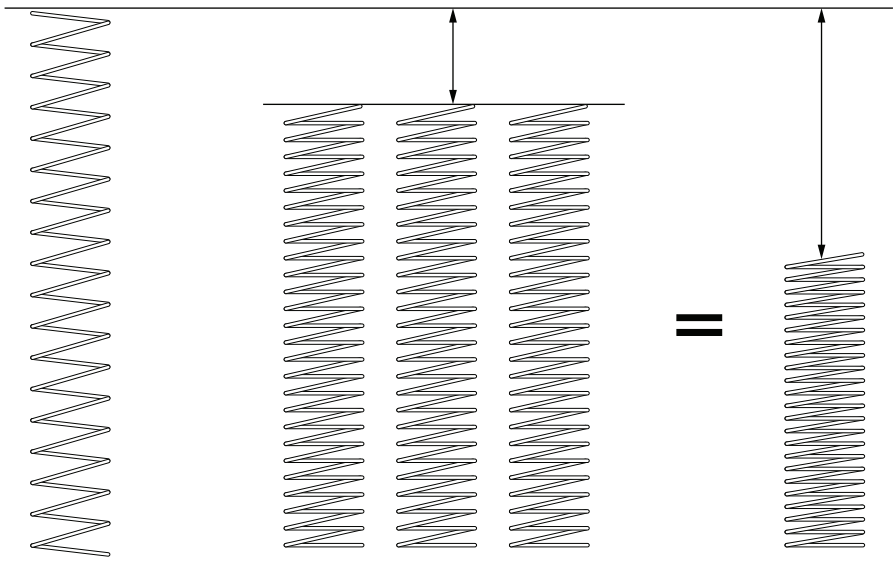

Figure 7. Battery string number effect on voltage change using the spring analogy

The difference in the cases is that the battery size in energy is changed from 6 strings in parallel to one string in parallel. This will lead in higher C-rates in the battery having smaller amount of strings when the same amount of power is taken out of each battery setup (current going from 1C --> 6C). The effect is visible in higher stretch of voltage levels needed in controlling the battery.

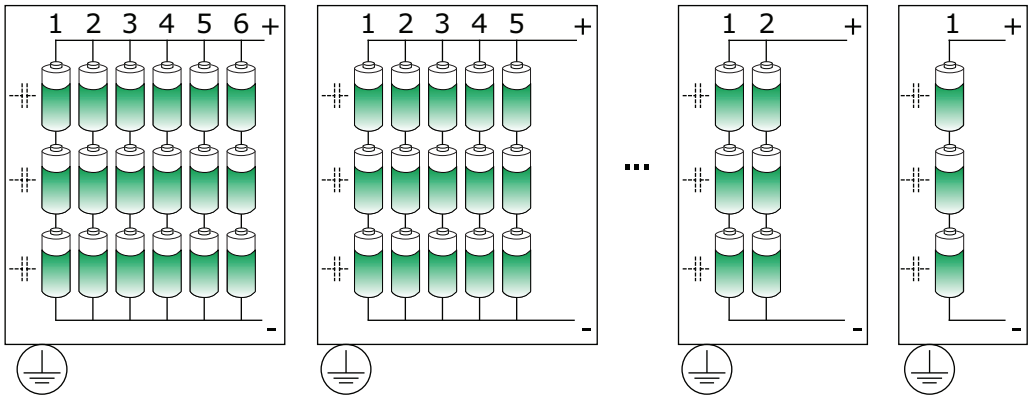

Figure 8. Number of batteries

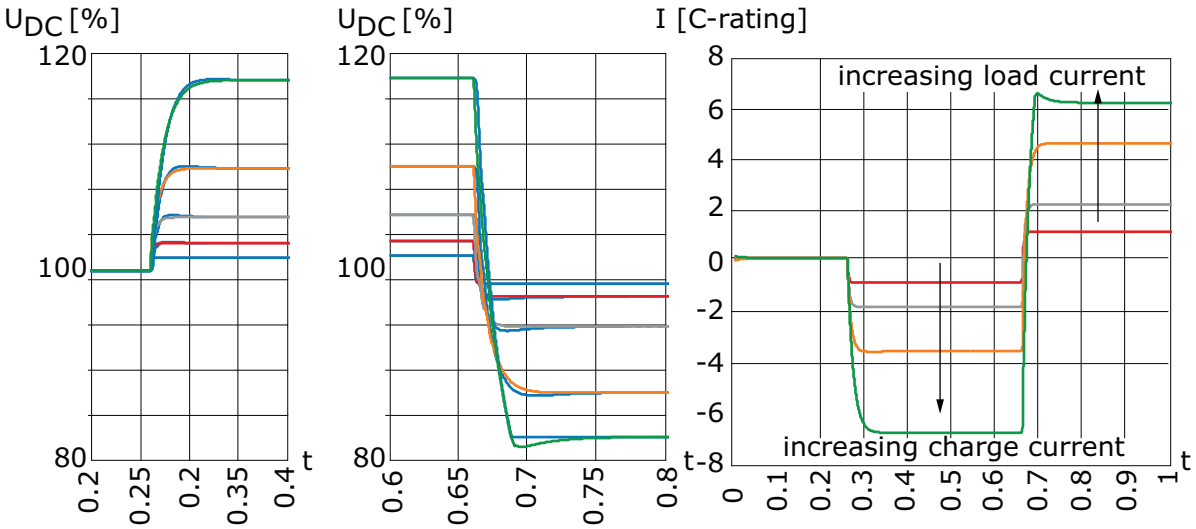

Figure 9. Battery sizing effect on voltage change during equal power changes

The spring analogy works also when thinking of parallelizing of batteries (springs). The more you have batteries (springs) in parallel, the less you need to use voltage stretch to gain the same response.

Tel. +358 (0) 201 2121 • Fax +358 (0)201 212 285

3.2 Galvanic isolation requirement

The pulse width modulation (PWM) produces common mode voltage. Because every phase (a, b and c) can be connected only either to positive DC-bus ($+U_{dc}/2$) or to negative DC-bus ($-U_{dc}/2$), sum of output voltages is always unequal to zero. The common mode voltage (CM-voltage) U_{cm} can be calculated as average of output voltages:

$$u_{cm} = \frac{1}{3}(u_a + u_b + u_c)$$

Table 3 presents all possible common mode voltages produced by different switching states. Used reference point is in the middle of the DC-link.

Table 3. Common mode voltage as function of modulation sequence

Switching vector	a	b	c	U_{cm}
U_1	+	-	-	$-U_{dc}/6$
U_2	+	+	-	$U_{dc}/6$
U_3	-	+	-	$-U_{dc}/6$
U_4	-	+	+	$U_{dc}/6$
U_5	-	-	+	$-U_{dc}/6$
U_6	+	-	+	$U_{dc}/6$
U_7	+	+	+	$U_{dc}/2$
U_8	-	-	-	$-U_{dc}/2$

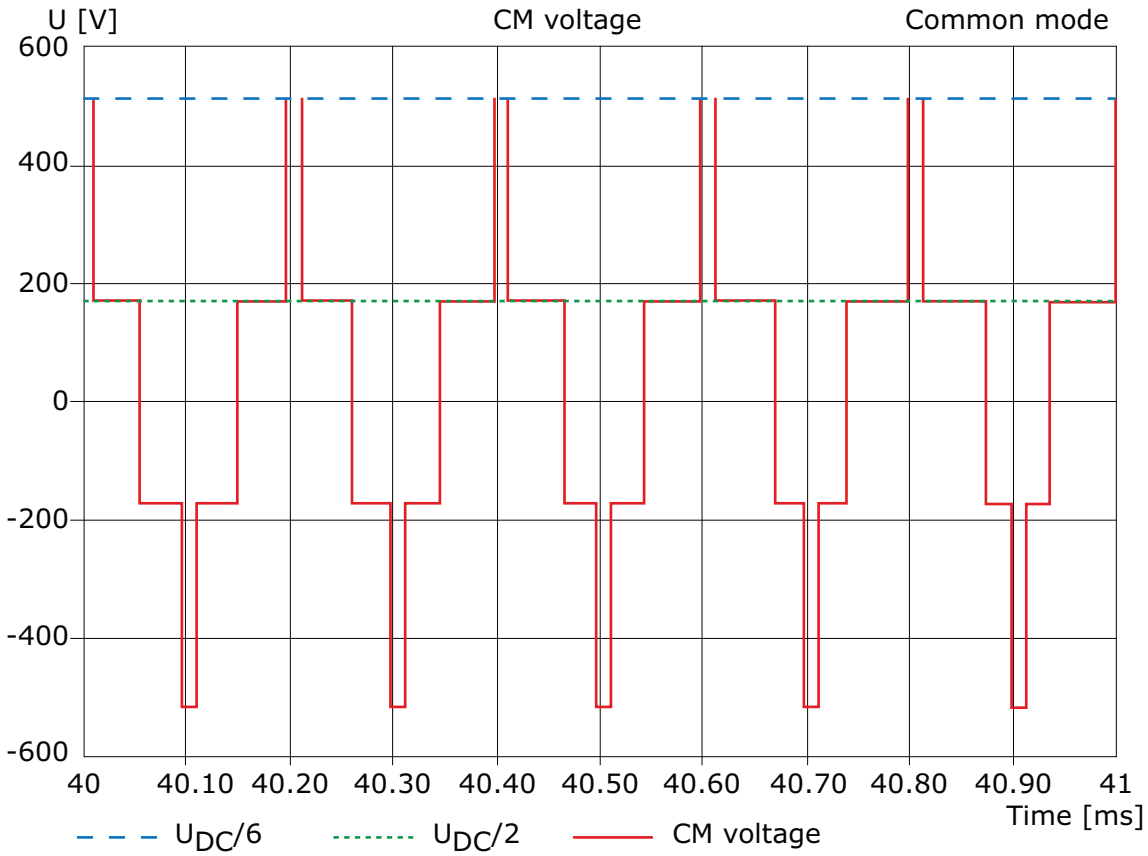

#	Curve info	max	min	rms
.....	$U_{DC}/2$	171	171	171
----	$U_{DC}/6$	512	512	512
___	CM voltage	512	-512	264

Figure 10. Simulated CM-voltage, U_{dc}=1025V, fsw=5kHz.

Because of the common mode DC-link starts to jump compared to ground. Main frequency for this jumping is switching frequency but also higher frequencies will be present. As an example, a typical measured DC+ to ground voltage can be seen in Figure 11. A rule of thumb is that with a typical DC-link voltage 1025V, the voltage spikes will be about 1.5kV.

Tel. +358 (0) 201 2121 • Fax +358 (0)201 212 285

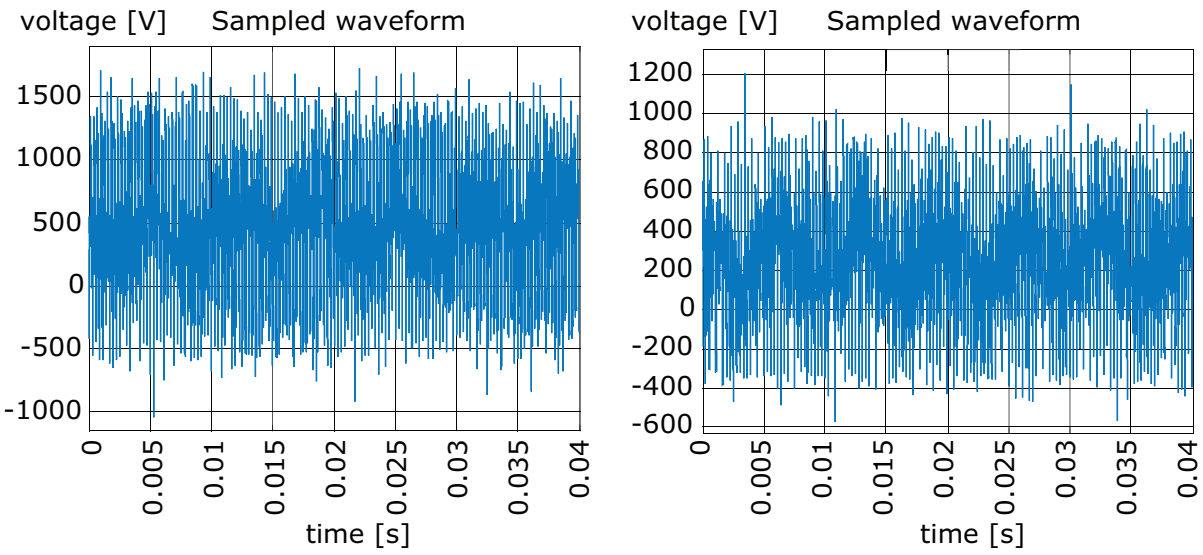

Figure 11. DC+ to ground voltage. On the left U_{dc} = 1200 V, on the right 800 V.

The battery system does not withstand unfiltered common mode voltage. Because PWM modulation is a CM voltage source, the DC side of the energy storage system must be stabilized. This means that there must be a flexible element in electrical system that is able to take this common mode voltage fluctuation. This element is now a transformer star point (instead of a motor stator star point) that shall not be grounded.

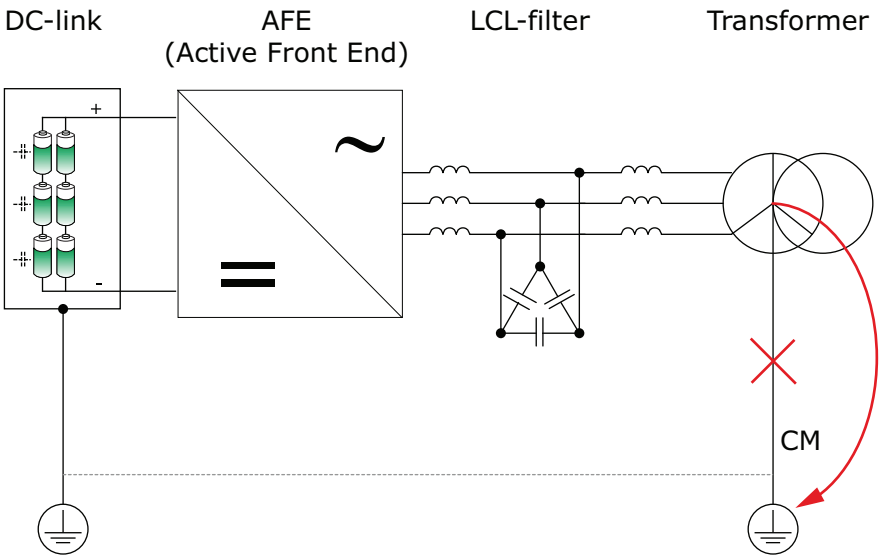

Figure 12. Transformer must be isolated from ground.

In the grid side filter, if LCL is used, the grounded capacitors cannot be kept connected to ground. If transformer inductance is bigger or at least the same as proposed grid side inductance, it is possible to use only an LC filter (sine) to avoid additional voltage drop in the grid side choke.

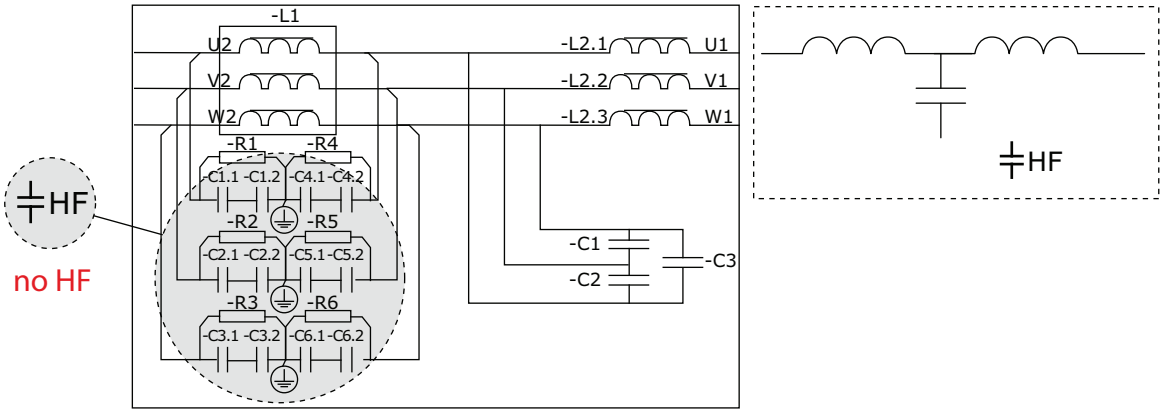

Figure 13. LCL ground capacitor must be disconnected

3.3 BALANCE OR MAINTENANCE CHARGE

The maximum voltage of the battery is needed only when charging the battery at the fullest level. Current in that voltage is small. However, the time during which this voltage prevails can be theoretically infinite if the battery is continuously kept 100% full (which is not advisable because of the aging of the battery). When the charging is finished and even only little load is given to the battery, the voltage decreases rapidly.

It is necessary (after a certain time or a number of battery charge/discharge cycles) to "reset the trip meter" of the Battery Management System. Otherwise the state of charge calculations can become misleading and result in poor behavior or even in exceeding the safe operation limits. The only good way to "reset the trip meter" is to charge the battery to the full state where the Battery Management System can safely tune its SOC value back to 100%.

Every cell must be charged extremely slowly so that the current of each cell goes as low as possible (the cell reaches its full voltage). For a big battery system that has many cells in parallel and in serial this is done from the same DC+ and DC- connections with the same Udc control. Do not start to dismantle batteries to charge them individually. Because of the differences in cell level (for example SOC, impedance) this means that some of the cells fill up sooner than others.

To avoid overcharging, the natural passive balancing of the battery system is needed. However, this is a slow process and that is why the balancing charge needs to be slow with an accurately controlled small current. It is difficult to say how accurate and small the current needs to be, but the rule of thumb is that 0.01C is needed. If the device is not able to provide accurately such a current, it is necessary to add a balance charger to the system. The battery manufacturer can also be consulted about balance chargers.

Tel. +358 (0) 201 2121 • Fax +358 (0)201 212 285

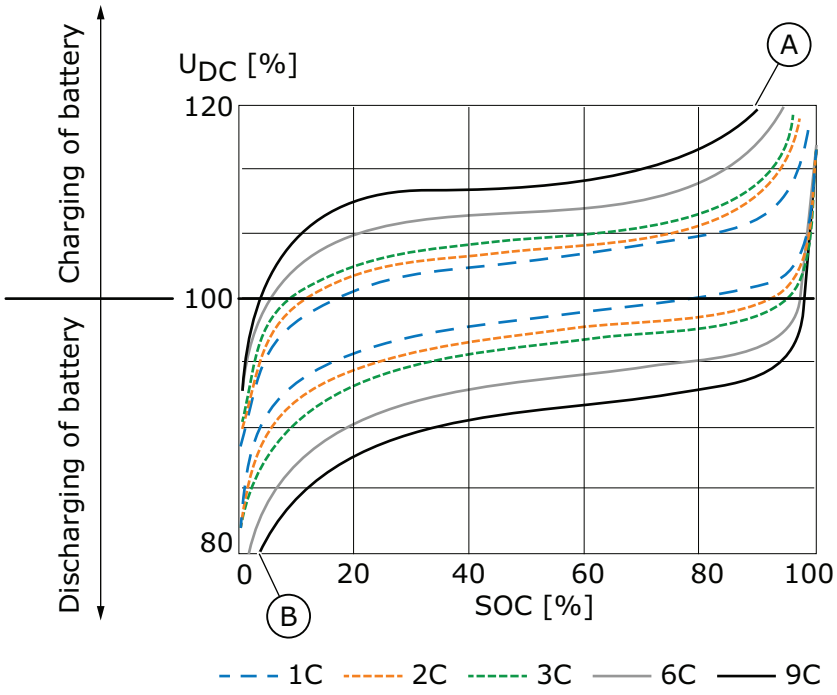

#	Reference	#	Reference
A	Not possible to reach 100% SOC with big current = Balance charger?	B	Not safe to go empty SOC with big current. BMS to tell when stop discharging.

Figure 14. The need of a balance charger

A balance charger is basically the same as a bulk power device (grid converter or DC/DC converter) but with a smaller rating to be able to reach a control accuracy of storage current of 0.01C.

3.4 System control principles

The energy storage systems are often incorporated with different layers of controls having different responsibilities.

The Energy Management System optimizes the energy efficiency of the system. This can include choosing and prioritization the usage of different energy sources. Normal time scales are from tens of seconds to hours.

The Power Management System includes controlling of power balance in a system that has multiple energy/power sources. Normal time scales are from grid cycle (20ms - 50Hz) to seconds.

The Power Conversion System of this list is the system relevant to the product. The PCS includes Power Conversion Control and Power Conversion Hardware, which is the VACON® hardware. It is to control power conversion between the energy storage and the system. Normal time scales are from micro seconds to grid cycles.

The Storage System includes Battery Management System and the battery. Battery Management System monitors the storage system as well as the storage cell level phenomena.

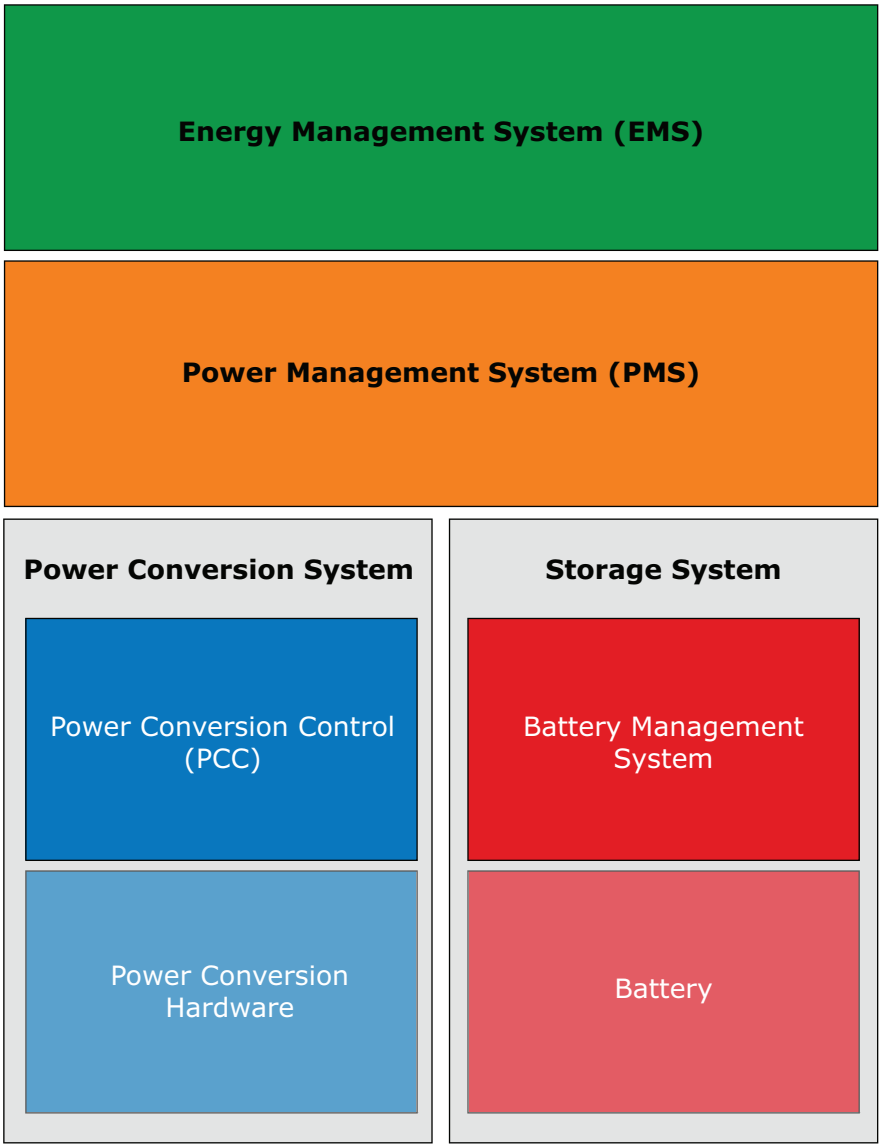

Figure 15. Typical system layers

Tel. +358 (0) 201 2121 • Fax +358 (0)201 212 285

4. CHOOSING A CORRECT TOPOLOGY

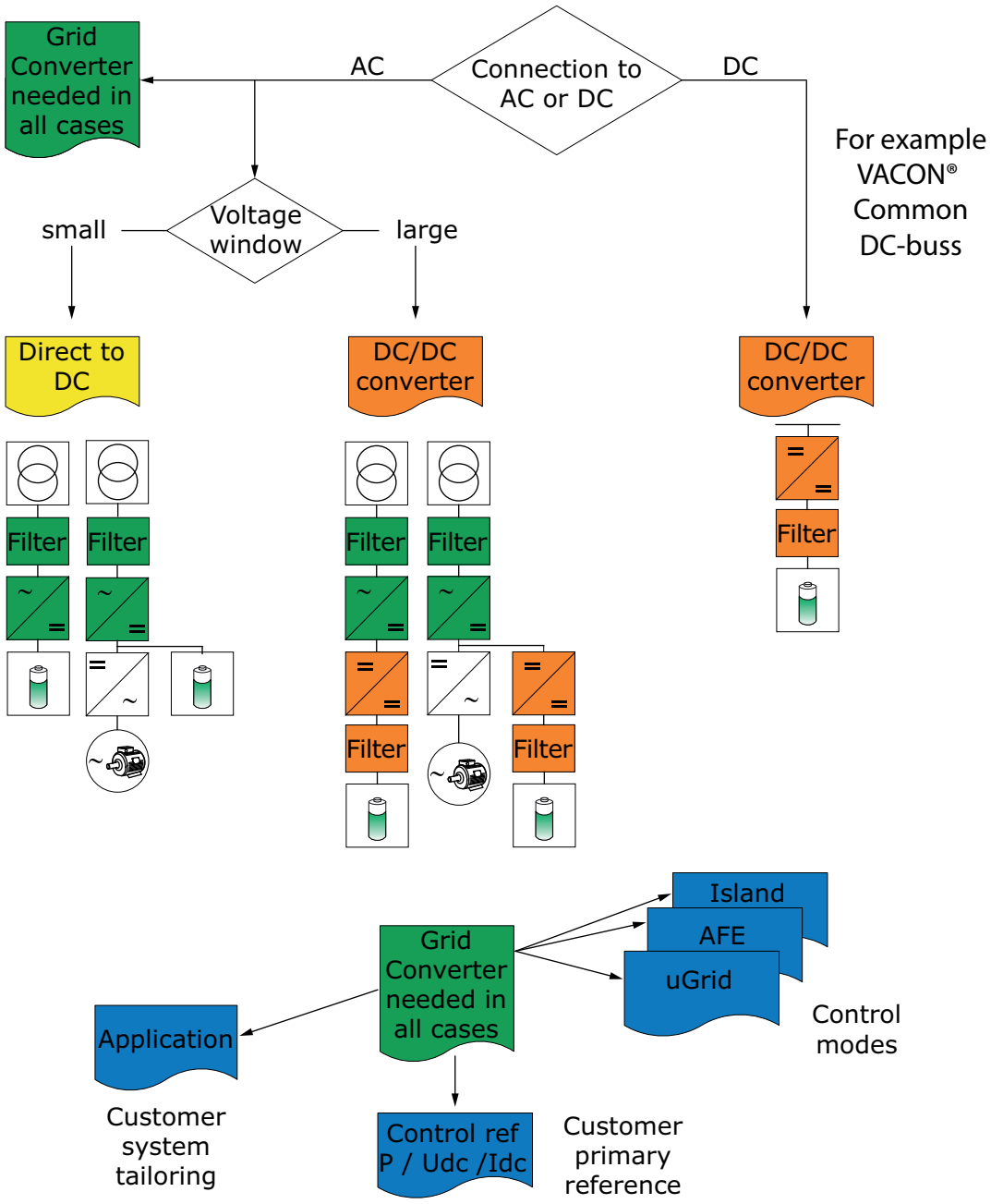

Figure 16. Selection diagram

4.1 ALLOWED TOPOLOGY CONFIGURATIONS

In the following table, example of allowed and not allowed configurations are given.

These configurations are valid for both with DC/DC converter or with a direct battery connection into the DC-link. Options shown below are DC/DC configurations A), B) and C) and Direct to DC connection D). Note that the storage topology does not affect the allowed or not allowed topology of the connection to the system. There might however be other limitations, for example voltage or current ratings.

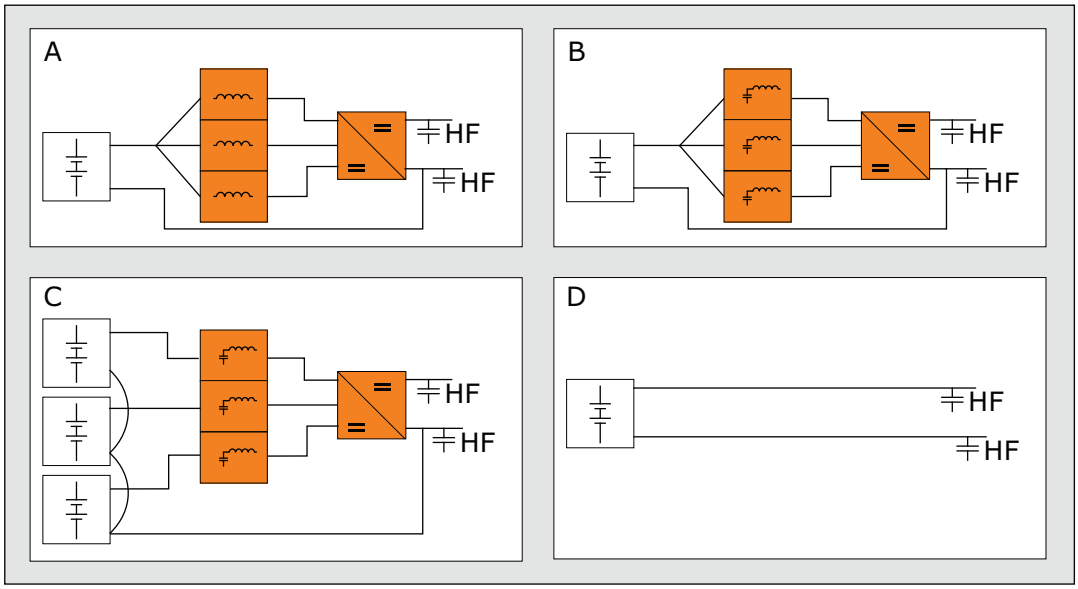

Figure 17. Options A, B, C, D

Table 4.

OK?	Configuration	Notes
✗	Options A, B, C, D ~ = 3 3	No grounding allowed in transformer
✗	Options A, B, C, D ~ = 3 HF 3	No HF/EMC capacitors in LCL
✓	Options A, B, C, D ~ = 3 3	OK
✓	Options A, B, C, D ~ = 3 3	OK, transformer has enough inductance to satisfy filtering demand of grid converter: $L_{transformer} \sim L_{grid\ side\ choke}$

Tel. +358 (0) 201 2121 • Fax +358 (0)201 212 285

✓	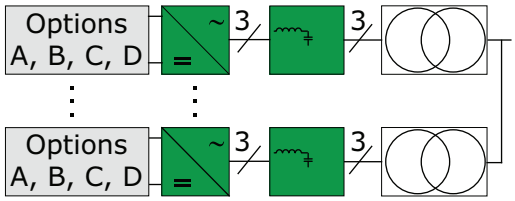	
✗	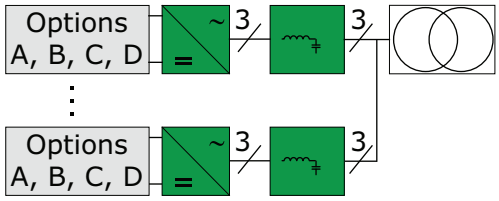	NOT OK Separate DC sources create different output voltage pattern which creates circulating current
✓	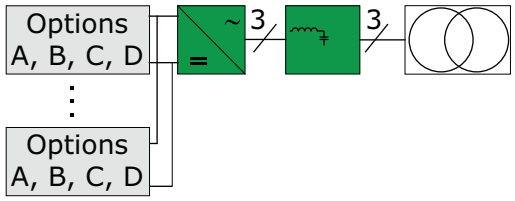	
✓	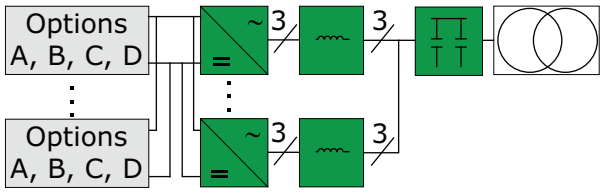	Not OK if grid selectivity is needed, specially for uGrid
✓	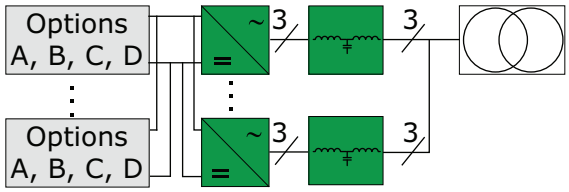	Not OK if grid selectivity is needed, specially for uGrid

5. BASIC VARIANTS

5.1 DIRECT TO DC

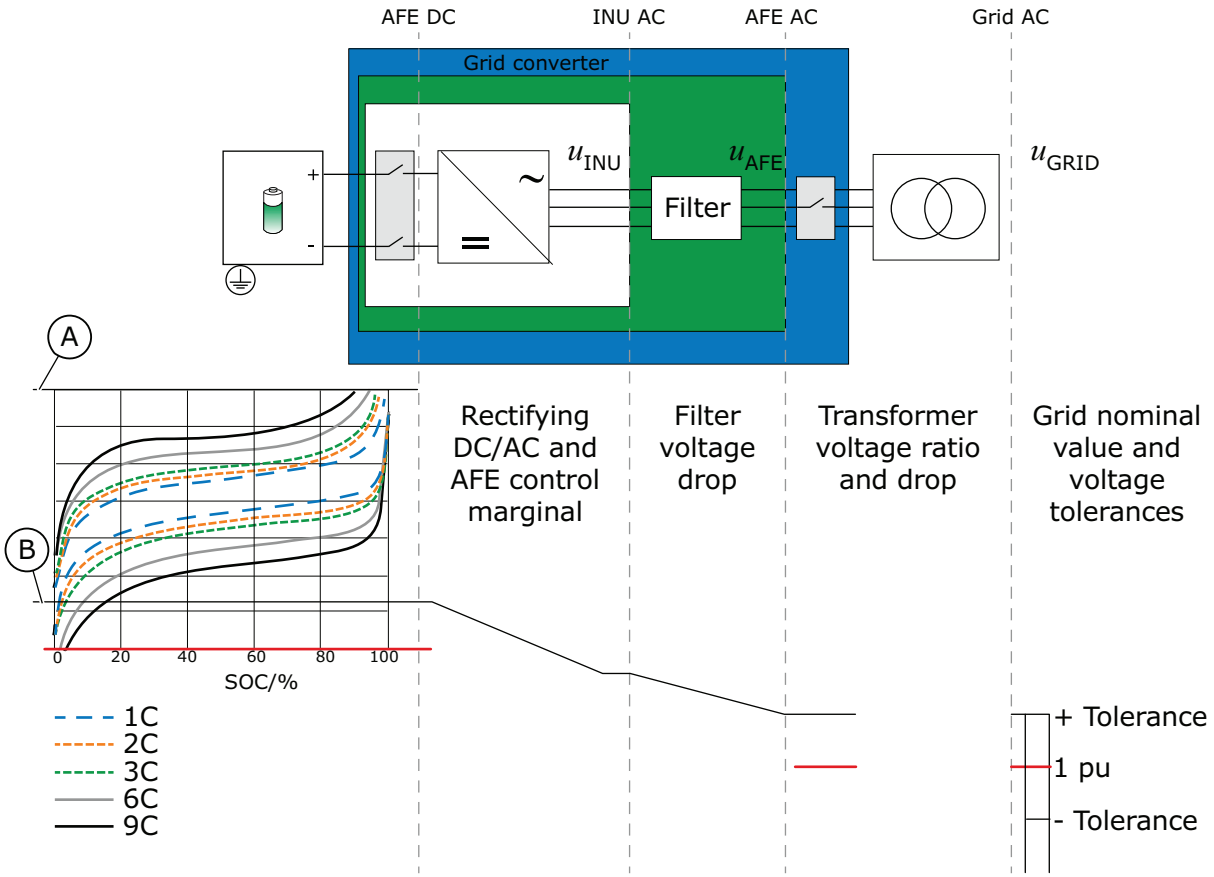

	230 V Unit	500 V Unit	690 V Unit	Vac
Supply voltage max	240	500	690	Vac
Supply voltage min	208	380		Vac
Over voltage instantly	437	911	1200	Vdc
Over voltage U2t trip	-	-	1100	Vdc
DC high ready (Stop)	382	797	1099	Vdc
Normal Max	324	675	931	Vdc
Normal Min	280	513	708	Vdc
DC low run (Def.estim.)	242	475	656	Vdc
DC low ready (Stop)	239	436	602	Vdc
DC low running min	225	410	567	Vdc
Under voltage instantly	183	333	461	Vdc

#	Reference	#	Reference
A	Maximum tolerable U_{DC} voltage for AFE operation	B	Minimum tolerable U_{DC} voltage for AFE to stay in grid with $\cos\varphi=1$

Figure 18. Direct to DC

Tel. +358 (0) 201 2121 • Fax +358 (0)201 212 285

5.1.1 CONTROL STRUCTURE

The power control is as presented below when the battery is directly on DC-link.

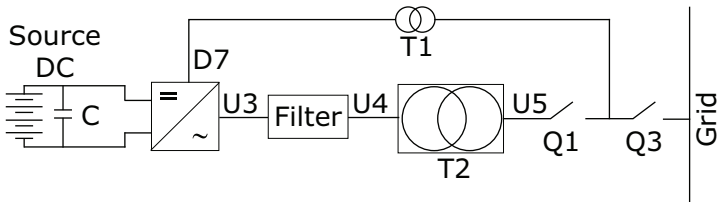

Figure 19. DC-link power control

Direct to DC can be used on a system where peak power shaving is desired and grid power sources' power sharing is done mainly through active power drooping. In such system, the power and grid frequency behave as shown in the picture below.

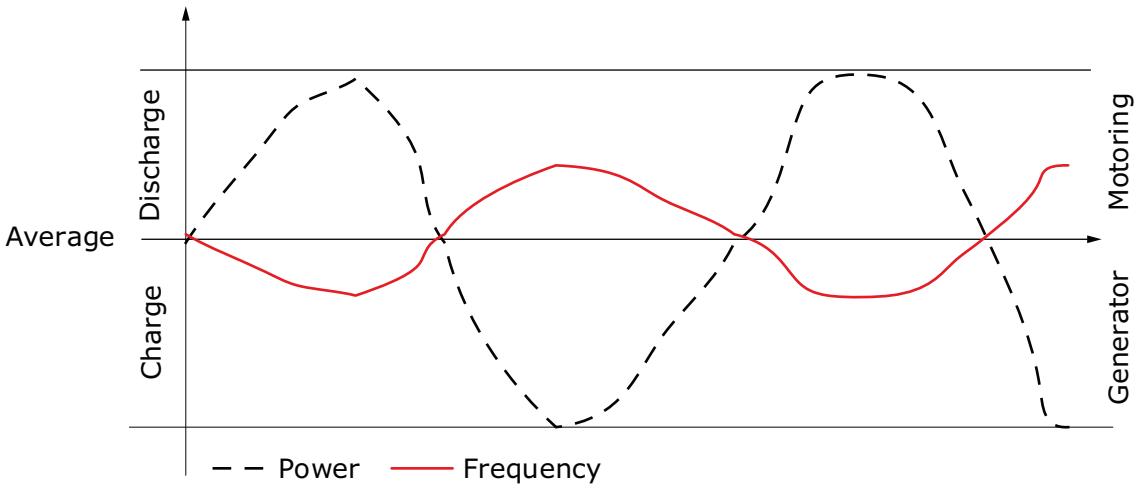

Figure 20. Behavior of system power and grid frequency

Grid Converter operation:

- uGrid-operation mode
  - o Power control possible when operating parallel with other power sources.
    - •Reference is base current reference (+/-).
    - •If the device is operating in island mode, the power reference changes the frequency.
  - o Grid frequency variations will affect what will be actual power to the grid.
    - •Operates like a normal generator.
    - •Power reference is several times faster than a normal diesel generator.
    - •Frequency drop in a grid will increase Grid Converter power output without power reference.
      - - Useful in situations where PMS is not fast enough or is unable to control.
  - o Upper system needs to give charging and discharging limit to the drive
  - o Upper system needs to give minimum and maximum voltage limits to the drive (DC-Link voltage).

- AFE-operation mode
  - o Power control possible trough DC voltage reference. Needs controller if customer input is power reference (instead of DC voltage reference).
  - o Cannot make or maintain grid by itself, needs existing grid
- Island-operation mode
  - o Power control not possible, drive will give to the grid what the grid needs.
  - o Cannot operate parallel with other power sources.
  - o Makes a grid but cannot synchronize to the existing one.

When doing maintenance charging with the aim of a 100% full battery, charging must be done with DC reference (possibly with a charging current limit).

Tel. +358 (0) 201 2121 • Fax +358 (0)201 212 285

5.2 DC TO DC

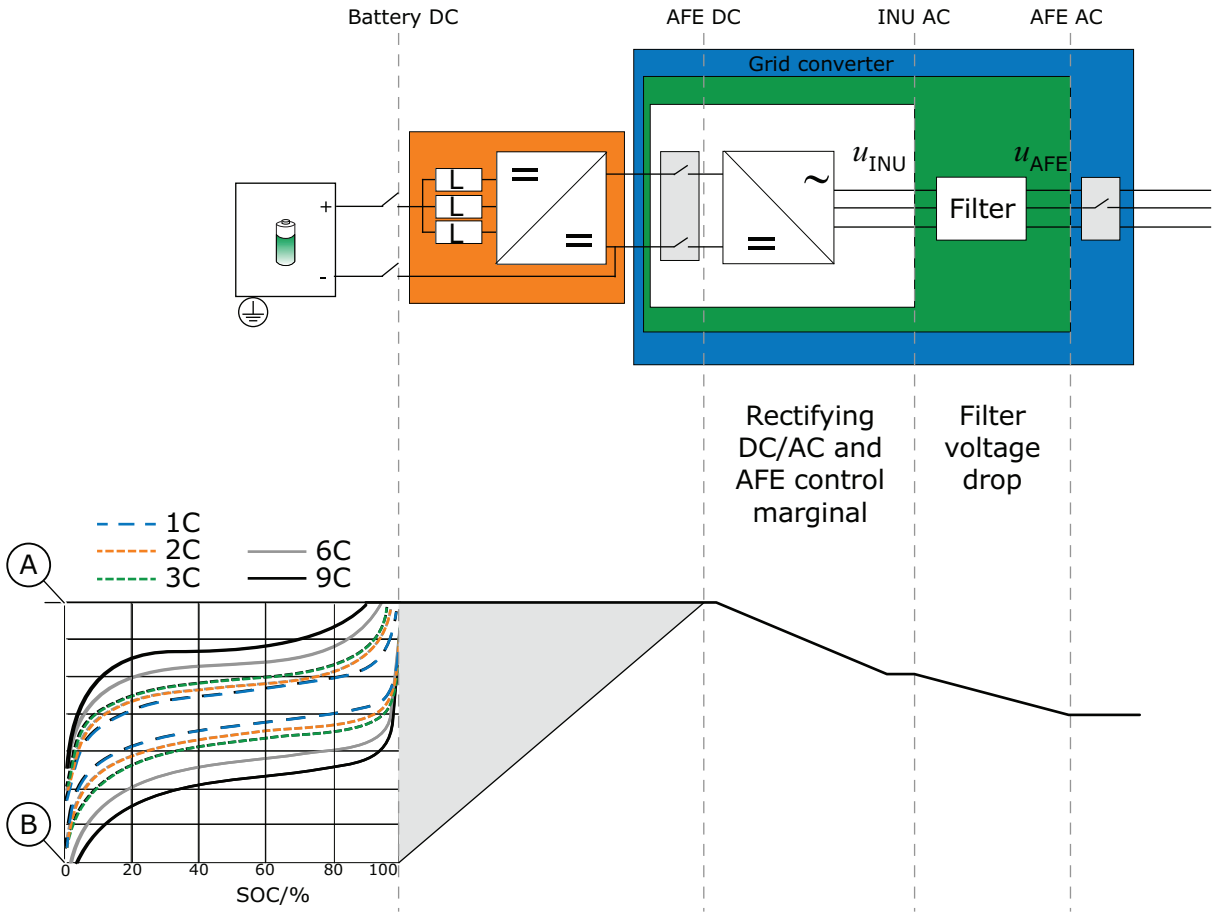

#	Reference	#	Reference
A	Maximum full battery $U_{Battery}$ voltage for fixed AFE reference voltage operation	B	Minimum tolerable $U_{Battery}$ voltage for DC/DC & filter current ripple

Figure 21. DC to DC

5.2.1 FILTER

The filter topologies in focus are:

1. Interleaved

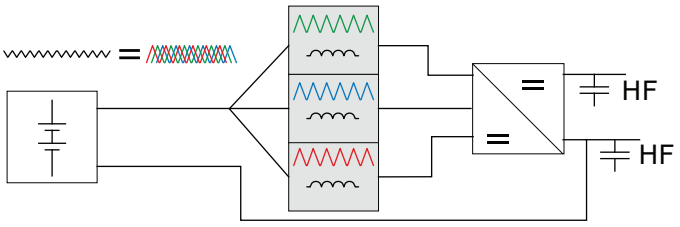

Figure 22. Interleaved filter topology

2. Independent output control (not yet supported)

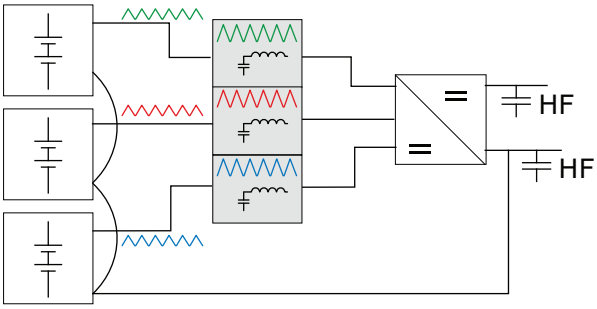

Figure 23. Independent output control

Interleaving is a method to cancel partially or completely certain harmonics from the spectrum. With a standard 3-phase inverter unit, a natural way is to have a 120 degree phase shift with each triangle carrier. The result is that the maximum peak to peak ripple is reduced to one third of the individual phase current ripple. Thus, while the sum current is multiplied by factor of three, the maximum relative output current ripple is reduced to 1/9. The equivalent switching frequency in the output is three times the switching frequency.

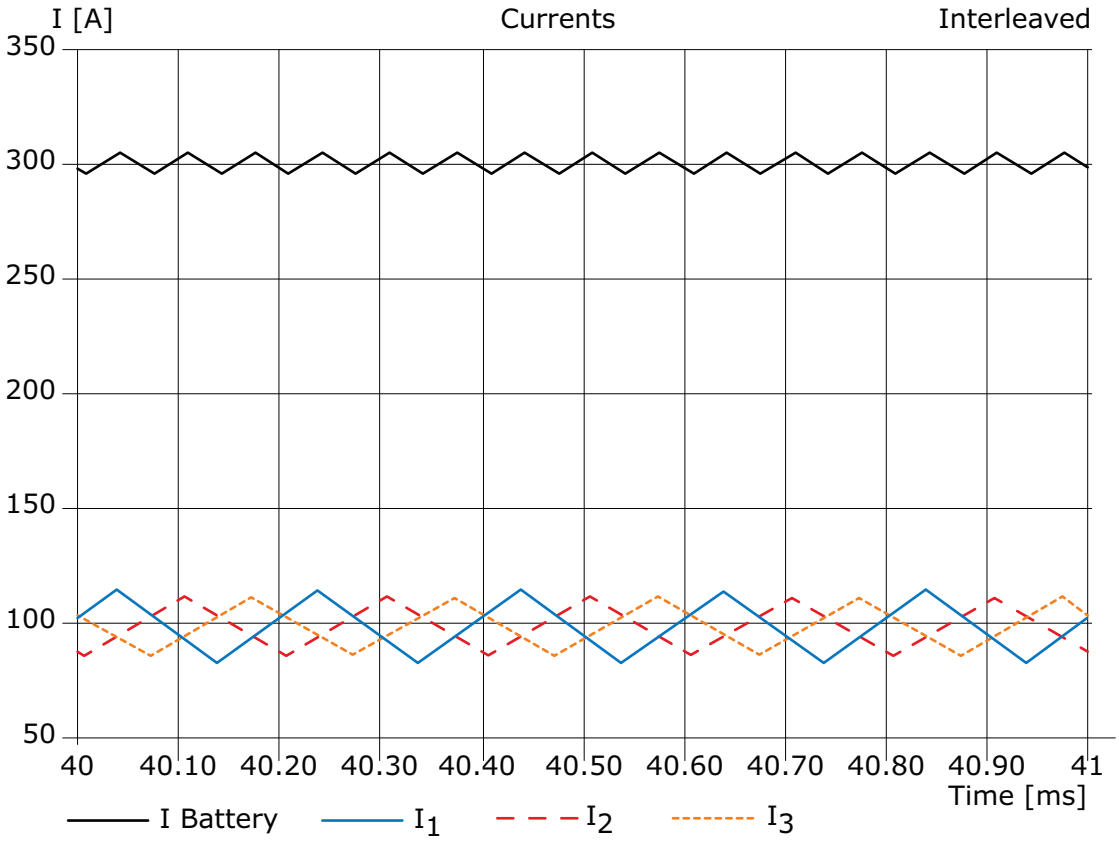

Curve info	rms	max	min	peak to peak
I 1	100.3	113.0	87.0	25.9
I 2	100.3	113.0	87.0	25.9
I 3	100.3	113.0	87.0	25.9
I Battery	300.0	304.6	295.4	9.1

Figure 24. Example simulation with interleaved control and d = 1/2: leg currents and sum current. I = 100 A/leg, L = 2050 uH, Udc = 1025V

Tel. +358 (0) 201 2121 • Fax +358 (0)201 212 285

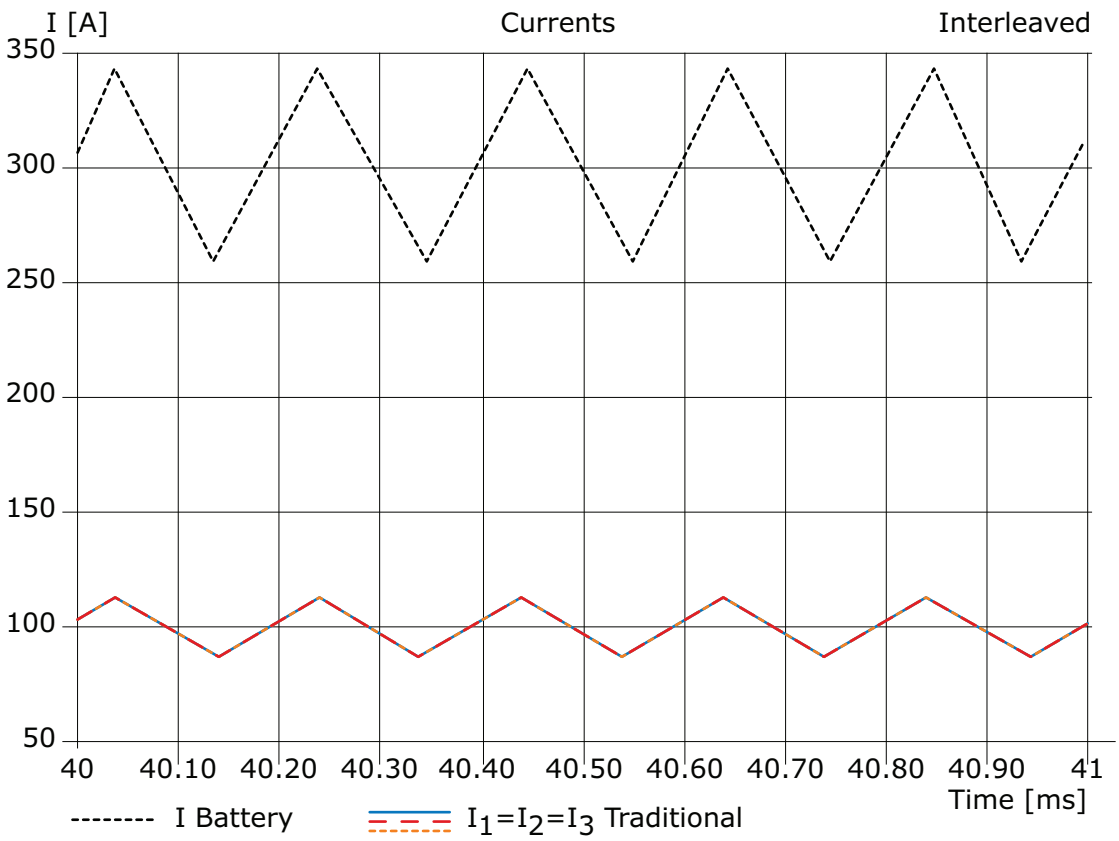

Curve info	rms	max	min	pk2pk
I 1	100.2	112.6	87.4	25.2
I 2	100.2	112.6	87.4	25.2
I 3	100.2	112.6	87.4	25.2
I Battery	300.7	337.9	262.1	75.7

Figure 25. Example simulation with traditional control and d=1/2: leg currents and sum current. I = 100A/leg, L= 2050 uH, Udc = 1025V

The ripple current for the filter choke can be calculated as follows:

$$I_{L,pp} = \frac{U_{dc}}{f_{sw}L}(d - d^2)$$

It is important to note that the ripple depends on duty cycle which is defined as follows:

$$d = \frac{U_{Out}}{U_{dc}}$$

The maximum value for the ripple of the choke is obtained when d = 1/2

$$I_{L,pp,max} = \frac{U_{dc}}{4 f_{sw} L}, \qquad d = 1/2$$

For the output current ripple there are three segments. When d < 1/3, two switches are always at low state and one switch is either low or high. When 1/3 < d < 2/3, one switch is low, one high and one is either low or high. And when d > 2/3, two switches are always high and one either low or high. With d = 1/3 and d = 2/3, output ripple is in theory cancelled. In practice simultaneous switching prohibit causes some ripple. Disabling simultaneous switching prohibit logic will reduce fluctuation near d = 2/3 and d = 1/3 considerably.

$$I_{Out,pp} = \frac{U_{dc}}{f_{sw} L} \begin{cases} (d - 3d^2), d <= {}^1/_3 \\ \left(\left(d - \frac{1}{3} \right) - 3 \left(d - \frac{1}{3} \right)^2 \right), {}^1/_3 < d <= {}^2/_3 \\ \left(\left(d - \frac{2}{3} \right) - 3 \left(d - \frac{2}{3} \right)^2 \right), {}^2/_3 < d <= 1 \end{cases}$$

The maximum value is obtained with three different duty cycles:

$$I_{Out,pp,max} = \frac{U_{dc}}{12 f_{sw} L}, \qquad d = \frac{1}{6}, \frac{1}{2}, \frac{5}{6}$$

Tel. +358 (0) 201 2121 • Fax +358 (0)201 212 285

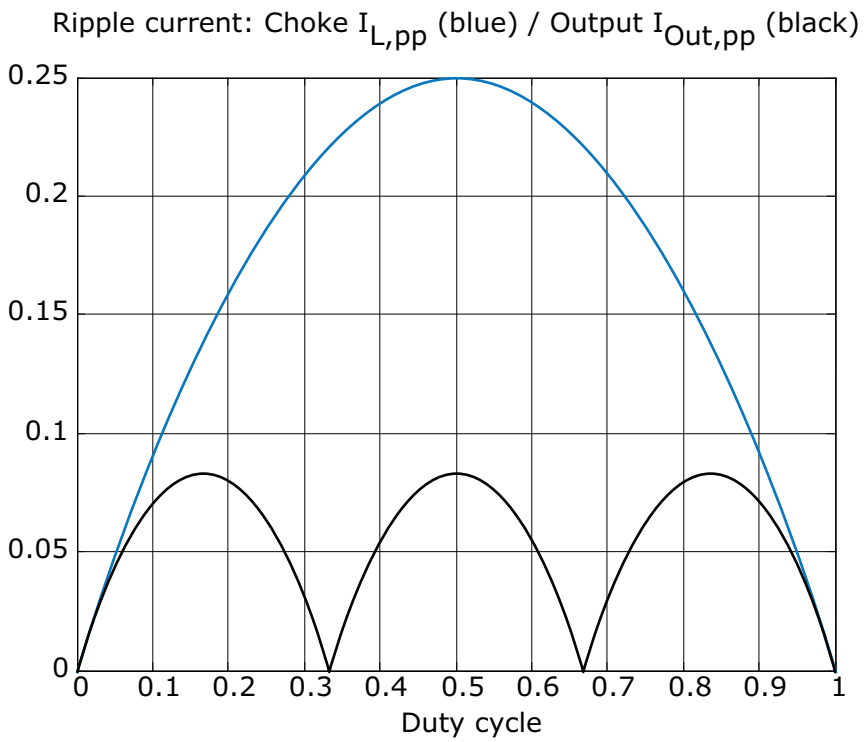

*Figure 26. Peak-to-peak ripple current as function of duty cycle. Scaled values can be converted to real values by multiplying Udc/(fsw*L)*

Interleaved switching helps to reduce the output ripple, but does not affect the single choke ripple. The choke losses are thus relatively big, when compared to e.g. active front end (AFE). To keep the losses reasonable, it is recommended to have peak-to-peak ripple one fourth of the nominal choke current. Thus the proposed formula to calculate the required inductance is:

$$L = \frac{U_{dc}}{f_{sw} I_{L,nom}}$$

Using the above filter dimensioning, the relative output ripple is:

$$I_{Out,pp,max} = \frac{\sum I_{L,nom}}{36}$$

Example with a ~ 3% peak-to-peak: The ripple current is a triangle wave and the RMS value is peak-to-peak divided by 2 $\sqrt{3}$, i.e. 0,8% RMS.

A more general formula for inductance calculation is:

$$L = \frac{U_{dc}}{4 f_{sw} I_{L,pp,max}}, \qquad d = 1/2$$

This can be used for example with powder core chokes which tolerate more ripple. With liquid cooling peak-to-peak ripple can be approximately 35-45% of the nominal current. A bigger ripple in the choke also directly increases the output side ripple which in this case would be approximately 4-5% peak-to-peak.

In most cases, a duty cycle d = 0,5 should be used in calculations. This will guarantee that worst case ripple is taken into consideration. For example, if the application operates with duty cycles 0.7-0.9, it could be possible to decrease the inductance, and in that way increase the choke ripple (see Figure 27 below). However, this would also increase the output ripple, and it might not be acceptable. On the other hand, if output ripple is not important, duty cycle optimization can lead to significant savings.

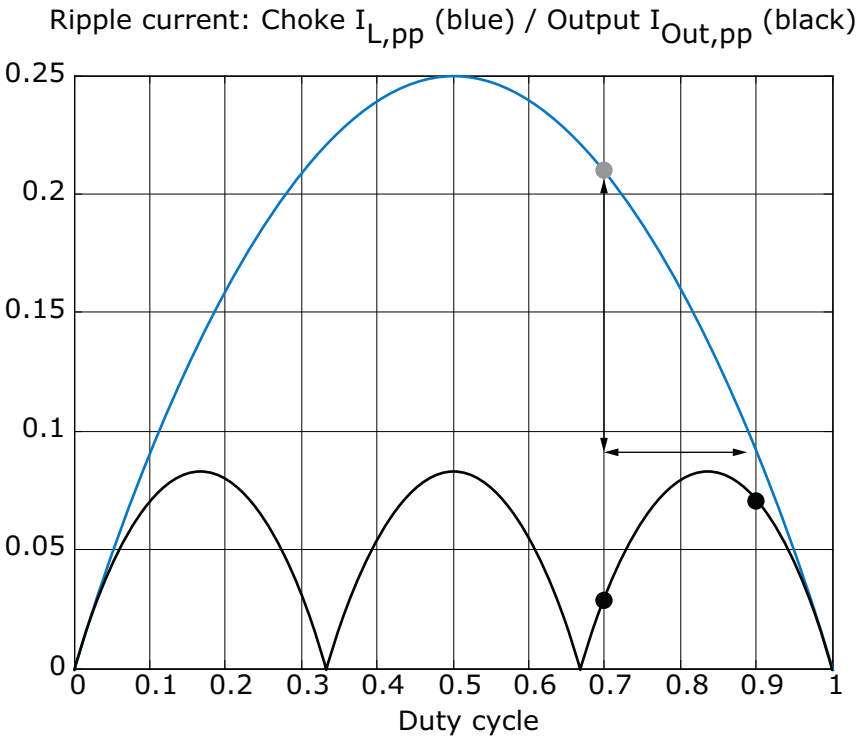

Figure 27. Always consider possible duty cycle window

A big DC-link voltage requires more inductance. If the DC/DC converter is sometimes used to boost DC-link higher than nominal, it must be noted that ripple increases.

In order to minimize size (inductance) of the filter choke switching frequency and current, ripple should be as high as possible. An optimal design is a compromise between these and power losses. When the design is ready, switching frequency decrease is not allowed, otherwise ripple will increase and this can cause temperature problems. In an LCL-filter structure, a smaller switching frequency can also cause resonances.

The inductance of a traditional laminated iron core choke usually remains constant (L_{NOM}) up to saturation point ($I_{NOM, PEAK}$ in Figure 28 below). After saturation point, the inductance starts to decrease. If overload ability is needed, ripple increases in saturation region and must be considered in the design. The inductance of a powder core choke behaves differently. Usually inductance as a function of current decreases continuously which means that with small currents the inductance is bigger. This is an advantage because ripple with partial loads will be smaller. On the other hand, it must be verified that the core is not going to saturation too fast, if overload ability is needed. How big the initial inductance is depends on choke design but typical values range approximately from 20% to 50% over nominal.

Tel. +358 (0) 201 2121 • Fax +358 (0)201 212 285

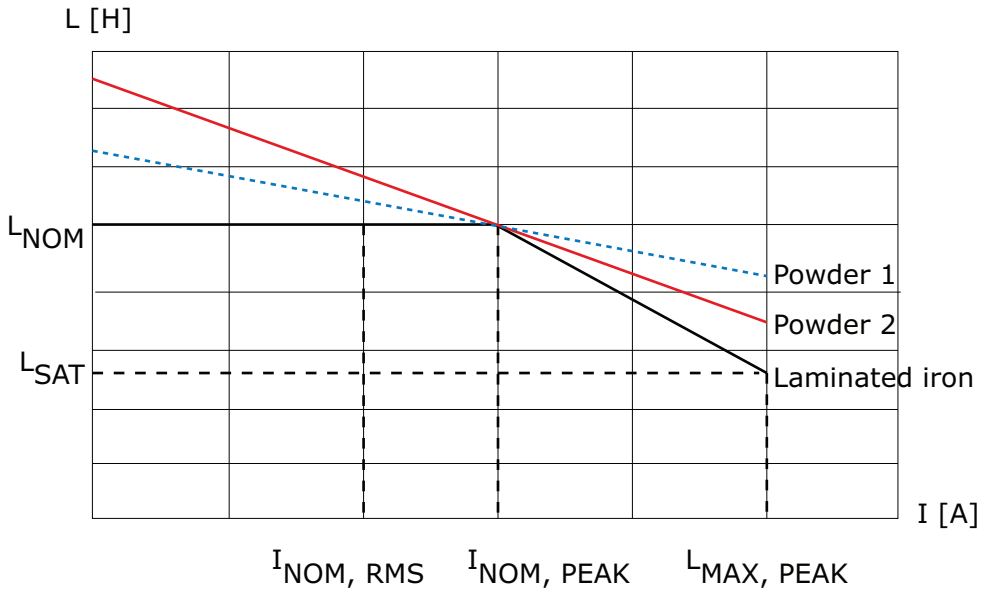

Figure 28. Inductance as function of current (relative values).

The typical tolerance for inductance is ±10%. Also smaller tolerance can be achieved, if needed. In the DC/DC converter, inductance tolerance does not affect the current balance between legs like in standard AC applications. Because of tolerance, switching frequency is not totally eliminated from the output current. This will increase the ripple and can cause some resonance issues with optional filtering capacitors. Tolerances also increase/decrease individual peak-to-peak ripple currents of chokes (Figure 29 and Figure 30). Temperature tolerances are not typically a concern with the above mentioned choke types if all chokes are of the same temperature.

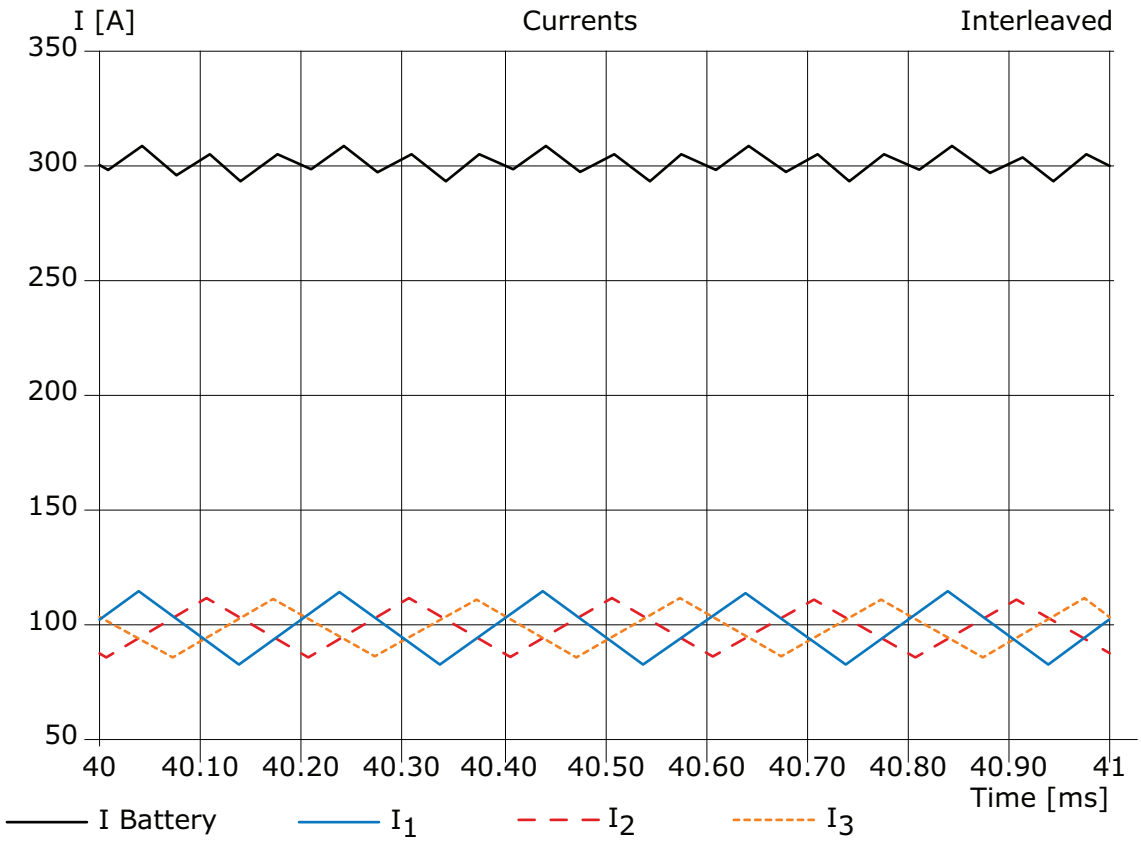

Curve info	rms	max	min	peak to peak
I 1	100.4	116.0	83.9	32.1
I 2	100.3	113.0	87.0	26.0
I 3	100.3	113.0	87.0	26.0
I Batteri	300.0	307.6	292.4	15.2

Figure 29. Example simulation with interleaved control and d = 1/2: leg currents and sum current. I = 100 A/leg, L = 2050 uH, Udc = 1025V. Leg U has 20% less inductance.

Tel. +358 (0) 201 2121 • Fax +358 (0)201 212 285

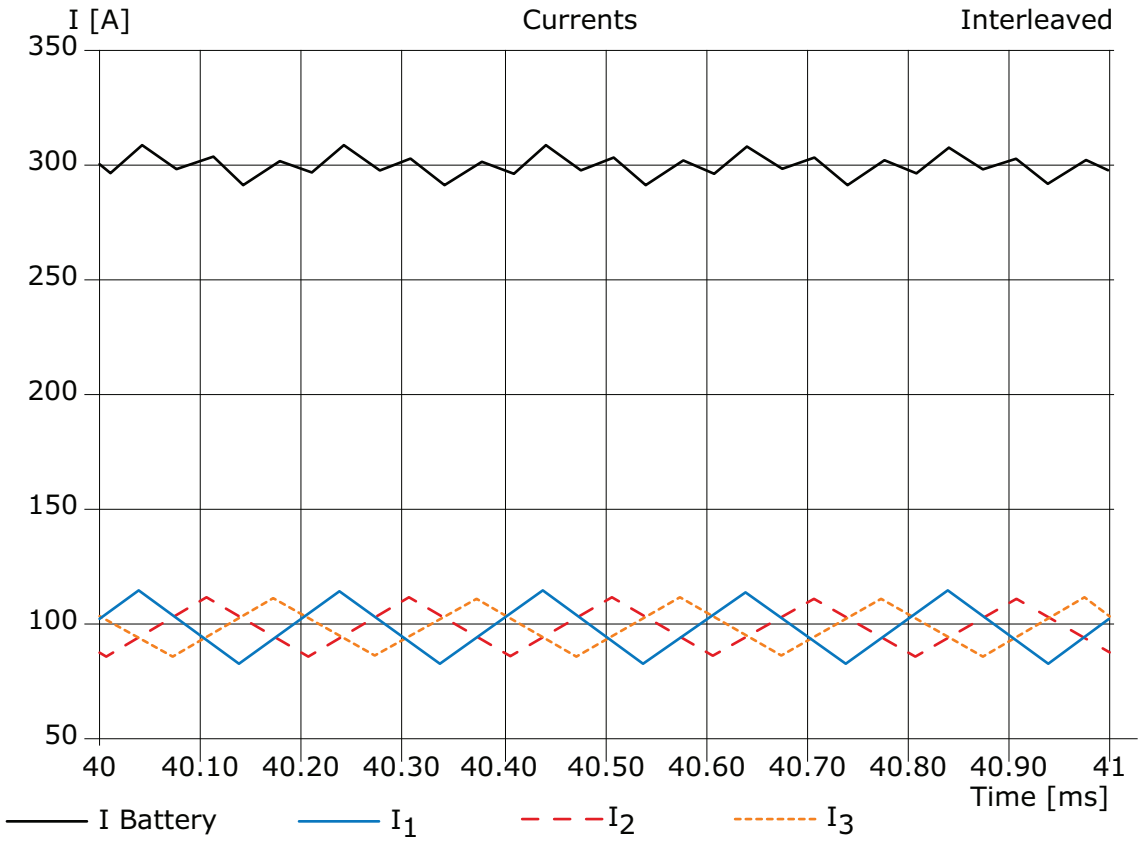

Curve info	rms	max	min	peak to peak
I 1	100.4	116.0	84.0	32.0
I 2	100.3	113.0	87.0	25.9
I 3	100.2	110.9	89.1	21.8
I Battery	300.0	308.4	291.6	16.9

Figure 30. Example simulation with interleaved control and d = 1/2: leg currents and sum current. I = 100 A/leg, L = 2050 uH, Udc = 1025V. Leg U has 20% less and leg W 20% more inductance.

The filter consists of three separate chokes, one for each leg (Figure 31). It is not possible to use a traditional 3-phase choke because the current is DC (common mode) and the magnetic flux does not have a natural return path in the core structure. There would be only a very small inductance generated by stray flux and this kind of situation can lead to a burnt filter. That is why a 3 x 1-phase structure is necessary. In addition, the stray capacitance should be small. Foil winding with many overlapping turns is not recommended. One way to minimize the stray capacitance is to use wire winding in one layer.

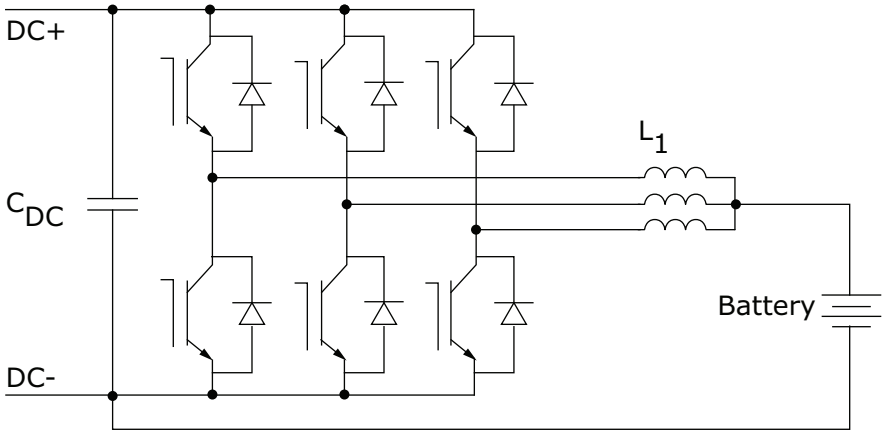

Figure 31. Simple filter consist of three separate chokes.

The target is that the filtering could be done with chokes only. That is a simple solution, and one benefit of not having capacitors is that switching the battery/supercapacitor is possible without any current spikes. When IGBTs are disabled, the connection requires only that the DC-link is higher or equal. If the output current ripple requirement is low and the required inductance would lead to an impractical design, one possibility is to use an optional filtering capacitor (Figure 32). The best case would be to add one more choke to form an LCL-filter structure (Figure 33). Without interleaving, an LCL-filter is recommended, otherwise ripple will be big (nine times bigger).

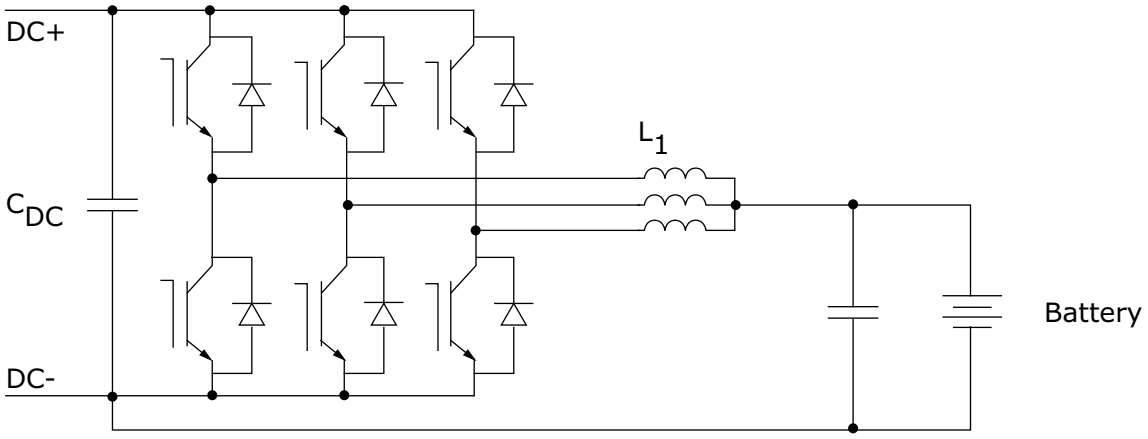

Figure 32. Optional capacitor (C) connected to filter output.

Tel. +358 (0) 201 2121 • Fax +358 (0)201 212 285

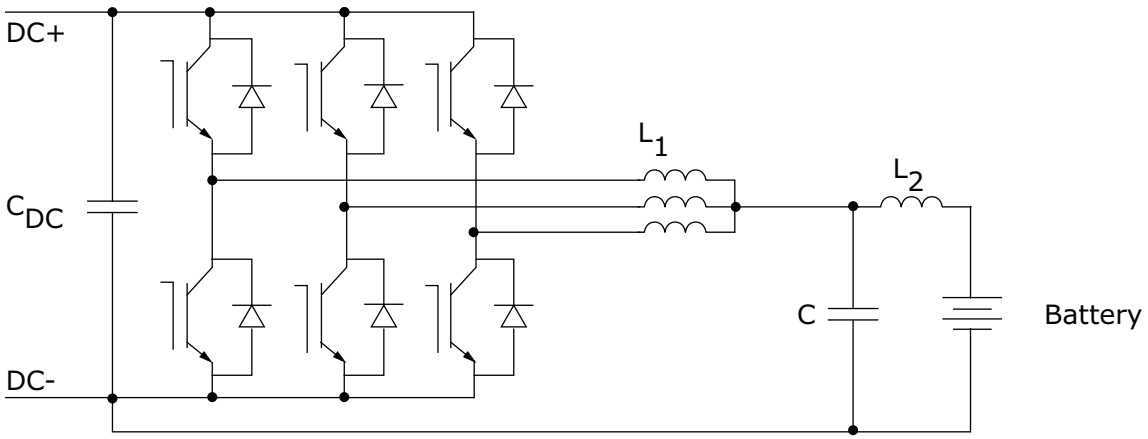

Figure 33. LCL-filter structure is best possible solution if output ripple is critical.

The optional capacitor forms an LCL-circuit with the cables and the battery. It is important to know the cable/battery impedance/inductance in order to evaluate possible resonances and calculate a safe capacitance value. The impedance of the battery seems to depend on many things so this is not an easy task. The resonance frequency for the LCL-circuit can be calculated as:

$$f_{res} = \frac{1}{2\pi}\frac{\sqrt{\frac{L_1}{3} + L_2}}{\sqrt{\frac{L_1}{3}L_2 C}}$$

Note that the inductance of the converter side choke is one third because of the parallel connection.

In addition, there can be resonance can happen between L1 and C or L2 and C:

$$f_{res} = \frac{1}{2\pi\sqrt{\frac{L_1}{3}C}} \quad or \quad f_{res} = \frac{1}{2\pi\sqrt{L_2 C}}$$

All these resonance frequencies must be well below the switching frequency. In standard inverter applications, the LCL-circuit resonance frequency is usually one third of the switching frequency. Because equivalent switching frequency at output is three times bigger, in theory it would be possible to use higher resonance frequencies. But as explained earlier, the switching frequency is not totally eliminated at output because of non-idealities in the control and chokes.

Because battery properties are usually not well known, it is recommended to dimension the optional capacitor as follows:

$$C = \frac{1}{\frac{L_1}{3}\left(2\pi\frac{f_{sw}}{5}\right)^2}$$

This will give some idea what could be expected to work, but because the battery properties are not taken into account in the design, it is not possible to guarantee a safe operation. If the filter does not operate as expected, the capacitance value can be increased for example by adding another capacitor in parallel. Without interleaving, the capacitor must be a lot bigger (for example ten times bigger) if the target is to be in the same level as with the interleaving control and chokes only. Note, however, that this especially depends a lot on the battery.

With a real LCL-filter structure, dependence of the battery properties is minimized and the design is more robust against resonances. The requirements for an additional battery side choke are quite simple because the ripple is very small. The voltage rating of the filter capacitor should be similar to the DC/DC converter DC-link capacitors.

The proposed rule to dimension an LCL filter is based on a safe resonance frequency. In this case it is estimated that half of the switching frequency would be small enough with interleaving. In addition, the battery side choke L2 is determined as 1/6 of L1 which corresponds to the typical inductance ratio of chokes in standard inverter applications. With these assumptions, the required capacitance (minimum value) can be calculated as:

$$f_{res} = \frac{f_{sw}}{2}$$

$$L_2 = \frac{L_1}{6}$$

$$C = \frac{9}{L_1(\pi f_{sw})^2}$$

Without testing, the interleaving capacitor must be bigger. At least double the size is recommended.

Crucial tests to verify filter applicability are:

1. Thermal tests: The worst case scenario for the filter in a thermal point of view is an operation point where continuous current is maximum, DC-link voltage as high as possible and duty cycle d = 1/2. At this point current ripple is the biggest.
2. Current tests: The worst operation point for current (both choke and output) is same as in the thermal tests. With interleaving, the output performance can be verified also with other peak and valley points of the duty cycle curve. If a capacitor is used, also the capacitor current should be measured.
3. Voltage tests: The voltage at the battery terminals should be measured. If the cable to the battery is long, the voltage at the filter output can also be measured. The voltage against ground is also interesting.

Tel. +358 (0) 201 2121 • Fax +358 (0)201 212 285

5.2.2 CONTROL STRUCTURE

The figure below presents power control when the DC/DC converter is between DC-Link and the battery.

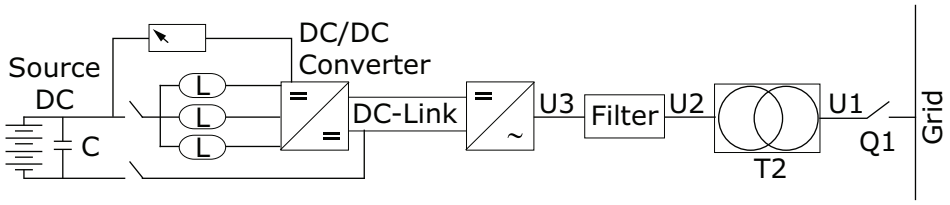

Figure 34. Power control example

DC to DC can be used on a system where peak power shaving is desired, and grid power sources' power sharing is done mainly through active power drooping. In such system, the power and grid frequency behave as shown in the picture below (Figure 35).

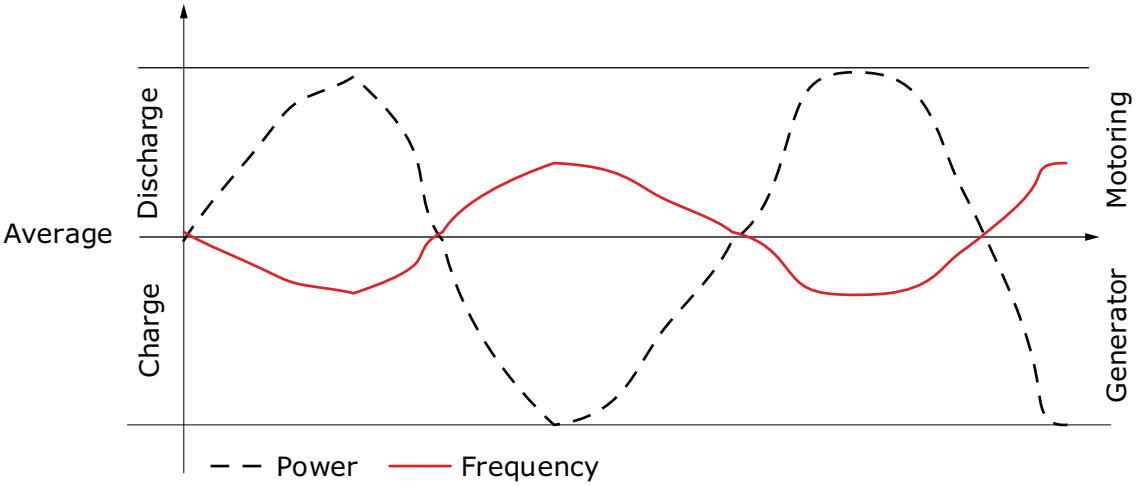

Figure 35. Behavior of system power and grid frequency

Grid Converter operation.

- Power control possible when operating parallel with other power sources.
  - o Reference is base current reference (+/-).
  - o If the device is operating in island mode, the power reference changes the frequency.
- Grid frequency variations will affect what will be actual power to the grid.
  - o Operates like a normal generator.
  - o Power reference is several times faster than a normal diesel generator.
  - o Frequency drop in a grid will increase grid converter power output without power reference.
    - •Useful in situations here PMS is not fast enough or is unable to control.
    - •Upper system needs to give charging and discharging limit to the DC/DC converter.
- Upper system needs to give minimum and maximum voltage limits to the DC/DC converter.
  - o Grid Converter needs also under voltage limit because battery voltage can come directly to DC-Link trough DC/DC converter, if DC-Link voltage goes below battery voltage.

- Charging can be achieved by upper system control or simply by Value ID Control functions. Charging will start automatically when the DC/DC converter overvoltage limit is reached even without charging reference.
- When the grid converter power flow is parallel to the grid, the DC-Link voltage will go down until it reaches the DC/DC converter undervoltage level, where the voltage remains until the DC/DC converter discharging current limit is reached.

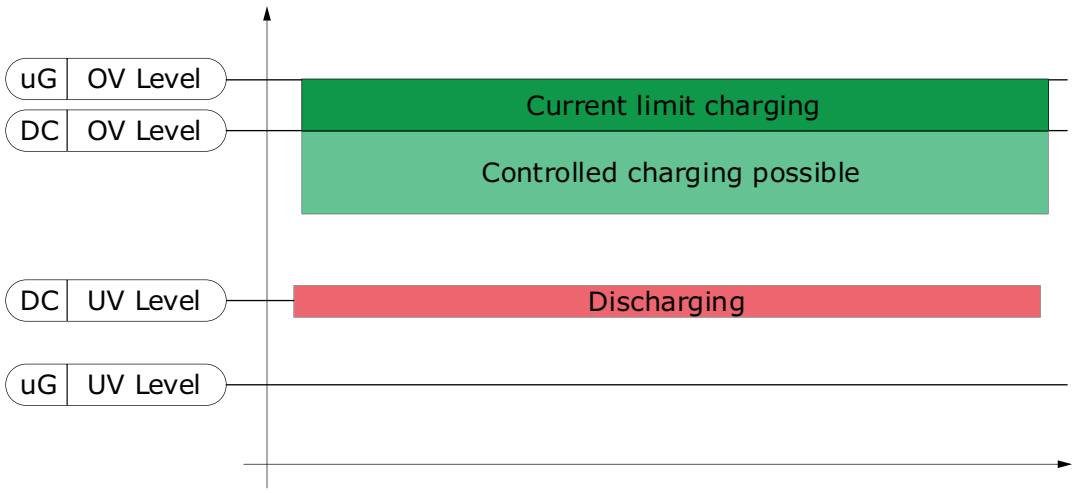

Figure 36. Charging and discharging

- AFE-operation mode.
  - o Not practical. Could be possible when DC/DC operated with under voltage control with a drooping. But DC reference changes makes steep power changes.
- Island-operation mode
  - o Power control not possible, drive will give to the grid what the grid needs.
  - o Cannot operate parallel with other power sources.
  - o Makes a grid but cannot synchronize to an existing one.

Tel. +358 (0) 201 2121 • Fax +358 (0)201 212 285

6. PRODUCT CONFIGURATION EXAMPLES

6.1 SCOPE OF DELIVERY

VACON delivers energy storage related power conversion equipment. The DC/DC converter includes power conversion hardware and power conversion control related software.

VACON does not deliver energy management systems, power management systems, or battery management systems.

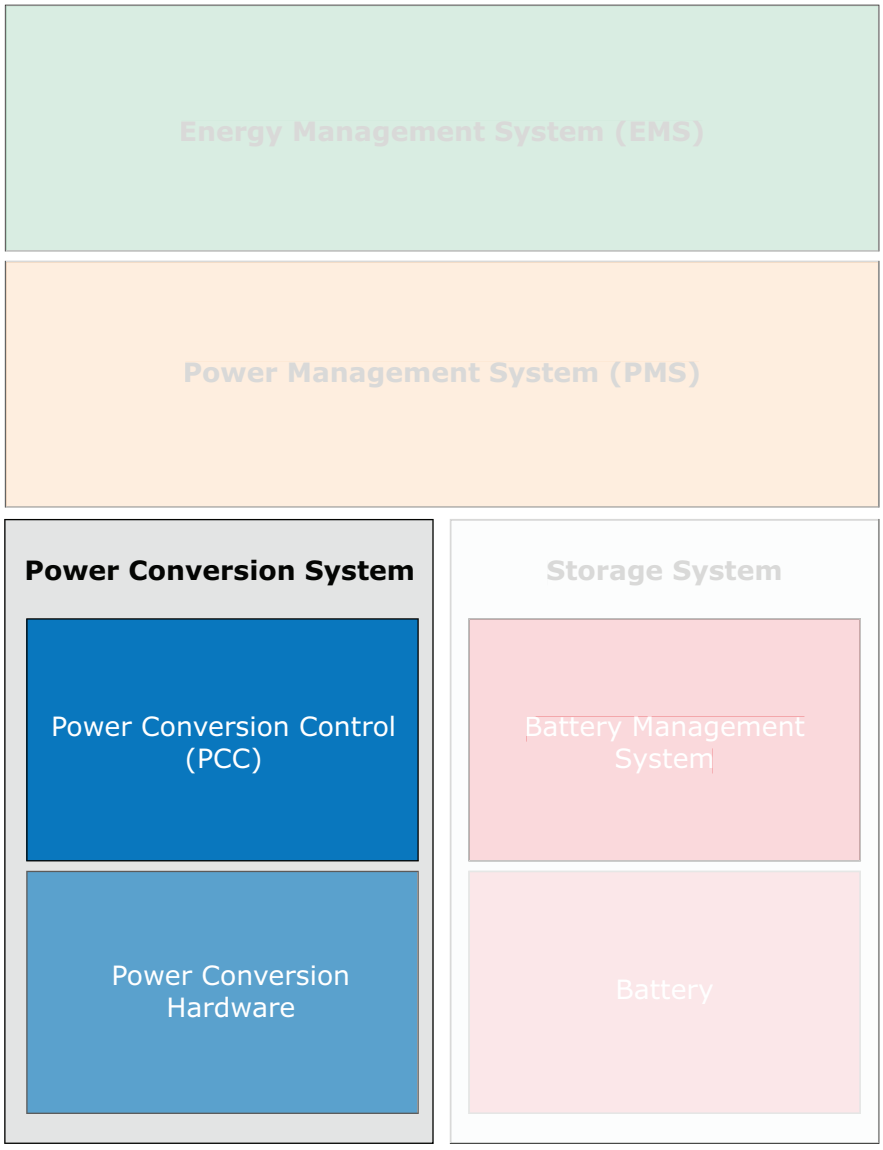

Figure 37. Vacon offering considering system level.

6.1.1 DIRECT TO DC

The scope of delivery of VACON includes the typical VACON offering from power modules to system drive or other suitable switchgear.

The simplest delivery includes power modules, LCL filters, NXP controls with an application and a license. All the rest is handled by the system integrator.

NOTE! The selection of available power modules can be seen in a separate chart.

The line measurement board D7 is instructed to be included in the delivery.

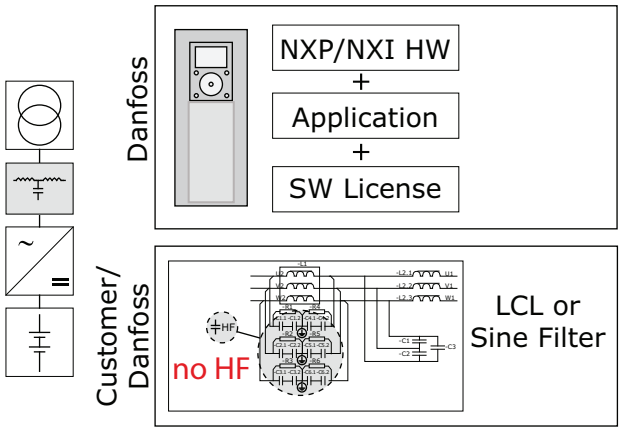

Figure 38. Scope of delivery

In tailored customer projects, the scope of delivery may be a switchgear including power modules, LCLs, NXP controls with an application and a license, but also breakers, fuses, DC pre-charging components and other possible control circuit.

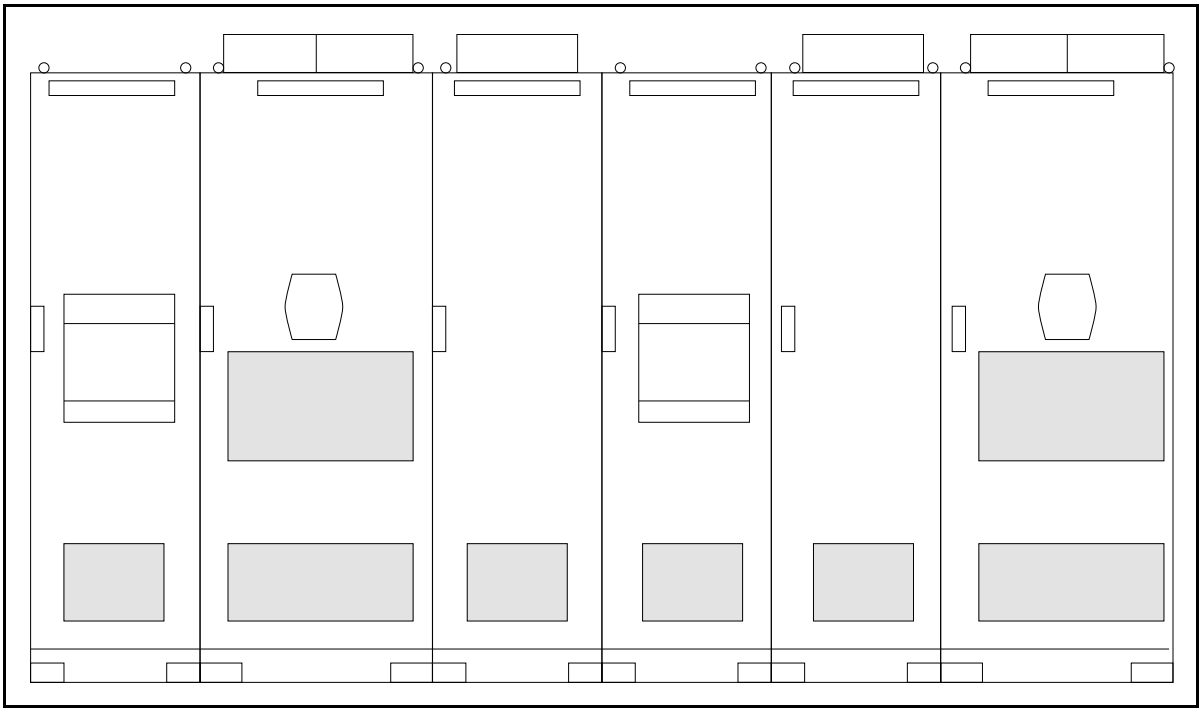

Figure 39. Scope of delivery

6.1.2 DC TO DC

The scope of delivery of VACON includes the typical VACON offering from power modules to system drive or other suitable switchgear.

The simplest delivery includes power modules, NXP controls with an application and a license. Deliveries of single phase chokes are not preferred to be handled by VACON as the dimensioning varies case by case. Still, delivery of chokes is negotiable. All the rest is handled by the system integrator.

NOTE! The selection of available power modules can be seen in a separate chart.

Tel. +358 (0) 201 2121 • Fax +358 (0)201 212 285

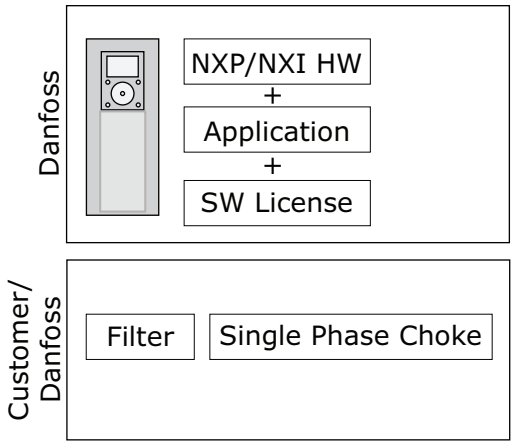

Figure 40. Scope of delivery

In tailored customer projects, the scope of delivery may be a switchgear including power modules, chokes, NXP controls with an application and a license but also breakers, fuses, DC pre-charging components and other possible control circuit.

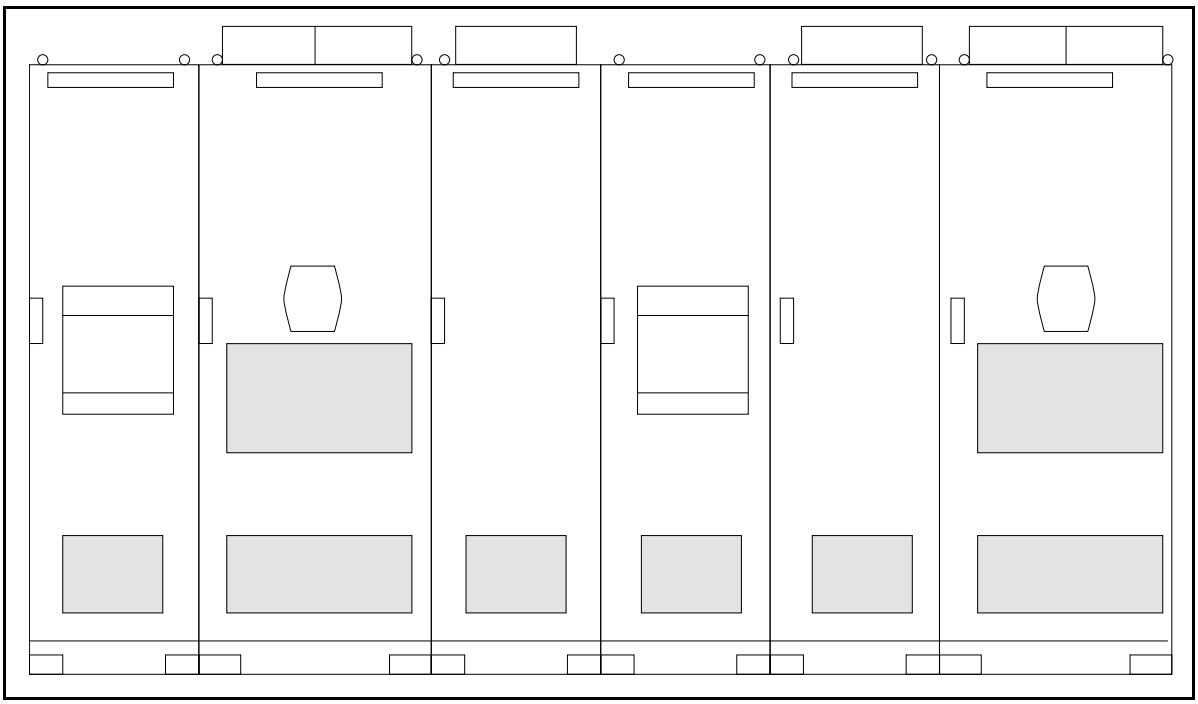

Figure 41. Scope of delivery

6.2 Example configurations

6.2.1 DC/DC for supply interruptions

The DC/DC converter can be used to prevent grid voltage drops to interrupt essential drives to stop for undervoltage. The DC/DC converter is connected to the AC drive's DC-terminals and used to feed power during the grid voltage drops. Essential motors can run and ride through the voltage drops without interruption.

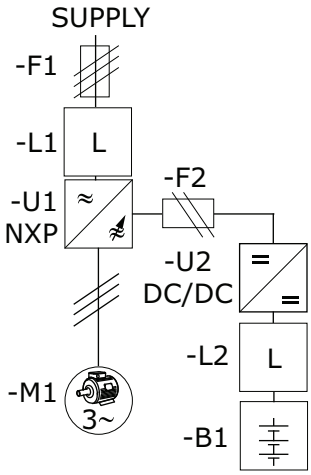

Figure 42. Failure ride through with undervoltage control

The DC/DC converter can be used to support the grid by equalizing the power peaks and producing the power if the main grid voltage drops. The DC/DC converter is connected to the grid converter and power can run in both directions by charging and discharging the batteries.

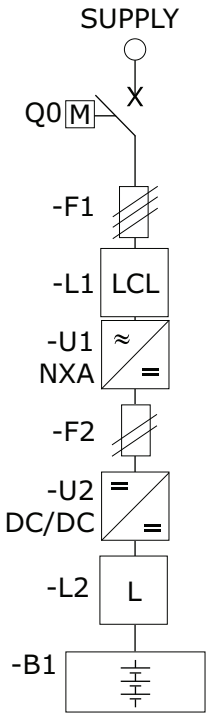

Figure 43. Peak shaving of AC-grid

Tel. +358 (0) 201 2121 • Fax +358 (0)201 212 285

6.2.2 Direct DC for Grid Support

In case the battery voltage window is favorable, the batteries can be connected directly into the DC. The same usage case of power balancing of the grid also applies here. In below an example of case where connection to the grid transformer is 440Vac and the battery voltage window is set to be 750-1100Vdc.

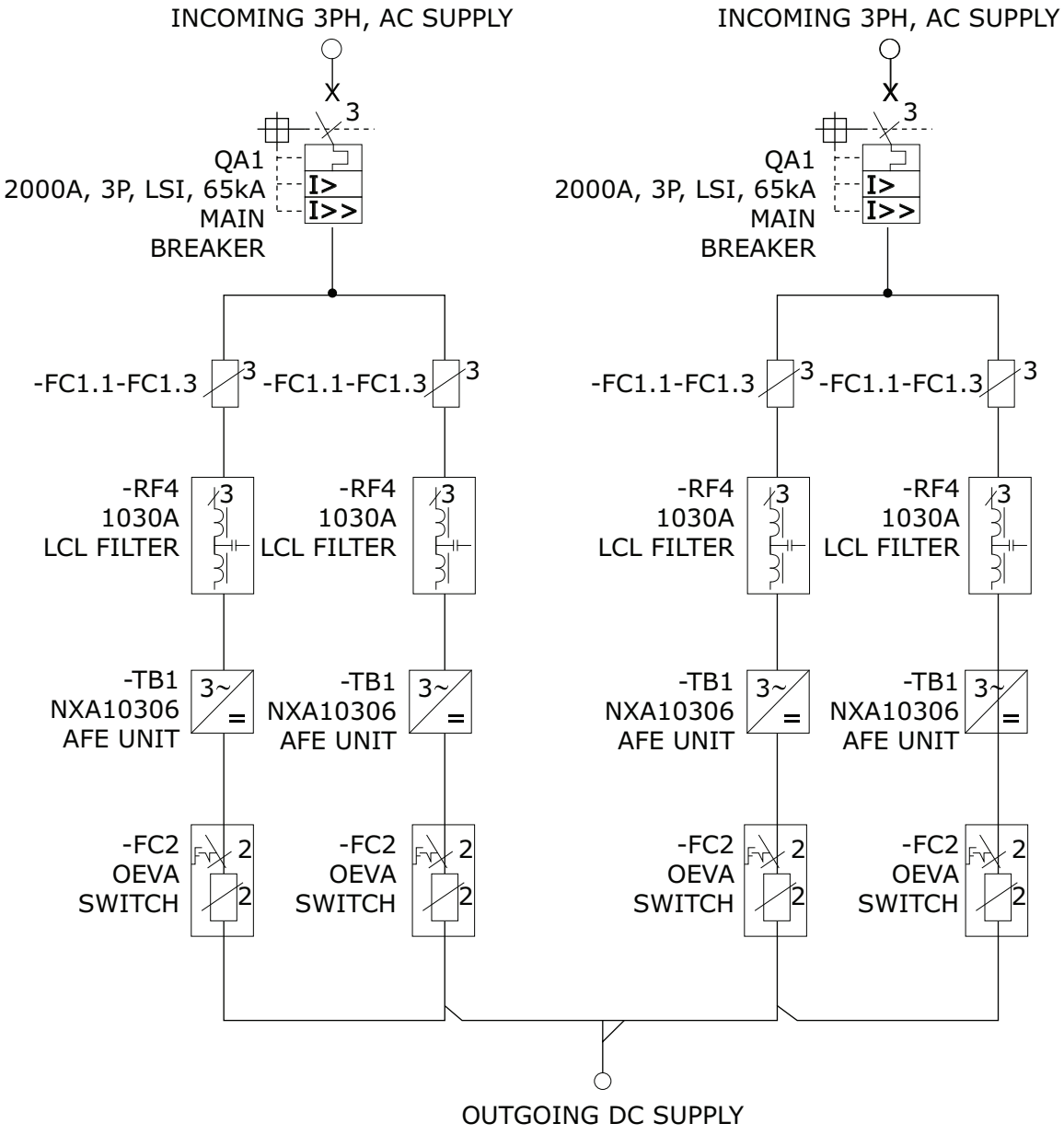

Figure 44. Peak shaving of higher power and high energy AC grid

7. SIZING OF THE SYSTEM AND PRODUCT

The basic principles that have an effect on the power unit selection are described in this chapter.

7.1 DIRECT TO DC

The energy storage voltage window sets up the guideline for the voltage class selection. The maximum voltage sets the requirement for using either 500 V class or 690 V class units. The value of DC High Ready (Stop) should be taken into account when choosing the appropriate unit with adequate maximum voltage. If the storage maximum voltage stays below 800 Vdc, it is possible to use 500 V class units. If it goes above 800 Vdc but stays below 1100 Vdc, the 690 V unit is applicable. NX8 voltage class liquid cooled units can be used up to 1200 Vdc link voltage.

	230 V Unit	500 V Unit	690 V Unit	Vac/Vdc
Supply voltage max	240	500	690	Vac
Supply voltage min	208	380	525	Vac
Over voltage instantly	437	911	1200	Vdc
Over voltage U2t trip	-	-	1100	Vdc
DC High Ready (Stop)	382	797	1099	Vdc
Normal Max	324	675	931	Vdc
Normal Min	280	513	708	Vdc
DC Low Run (Def.Estim.)	242	475	656	Vdc
DC Low Ready (Stop)	239	436	602	Vdc
DC Low Running Min	225	410	567	Vdc
Under voltage instantly	183	333	461	Vdc

The minimum voltage of the energy storage is crucial in current dimensioning of the unit size. An easy rule of thumb is that output voltage of grid converter is

$$U_{ac} = \frac{U_{\text{bat,min}}}{1.56}$$

The gain 1.56 is not accurate and depending for example on voltage drop in filters and grid state. Theoretically the gain can vary from 1.41 to 1.89. However 1.56 is a good starting point.

Now if the customer has indicated the needed power P, the corresponding current I_{ac} for calculated voltage U_{ac} can be calculated with:

$$I_{\text{ac}} = \frac{P}{\sqrt{3} \cdot U_{\text{ac}} \cdot cos(\varphi)}$$

The selection is made by choosing an appropriate current size from the VACON products with the above defined voltage class based on the maximum storage voltage level. The output voltage is needed for the transformer dimensioning.

Tel. +358 (0) 201 2121 • Fax +358 (0)201 212 285

7.2 DC/DC

The current capability of the DC/DC converter is limited by two constraints. The first constraint is the current rating defined in the rating plate of the power converter that defines the operating area in which the CE and UL certification is valid.



Figure 45. Vacon power converter ratings plate and their corresponding values in DC/DC converter circuit diagram.

The second constraint is the thermal limits of the power converter. There are two parts which are thermally stressed in the DC/DC application:

- The DC link busbars DC+ and DC- which are dimensioned according to I 1 of the DC/DC converter.
- The IGBT switches in the DC/DC converter due to high switching frequency.

There is a software current limiter in the DC/DC converter to ensure these constraints are not violated. The combined effect of the constraints thus becomes dependent on the voltage levels on the storage side and the converter DC-link according to the figure below. Formulas in the graph show how to calculate the output current I_3 based on the current I_1 which is denoted as I_{NOM} in the ratings tables of the DC/DC converter.

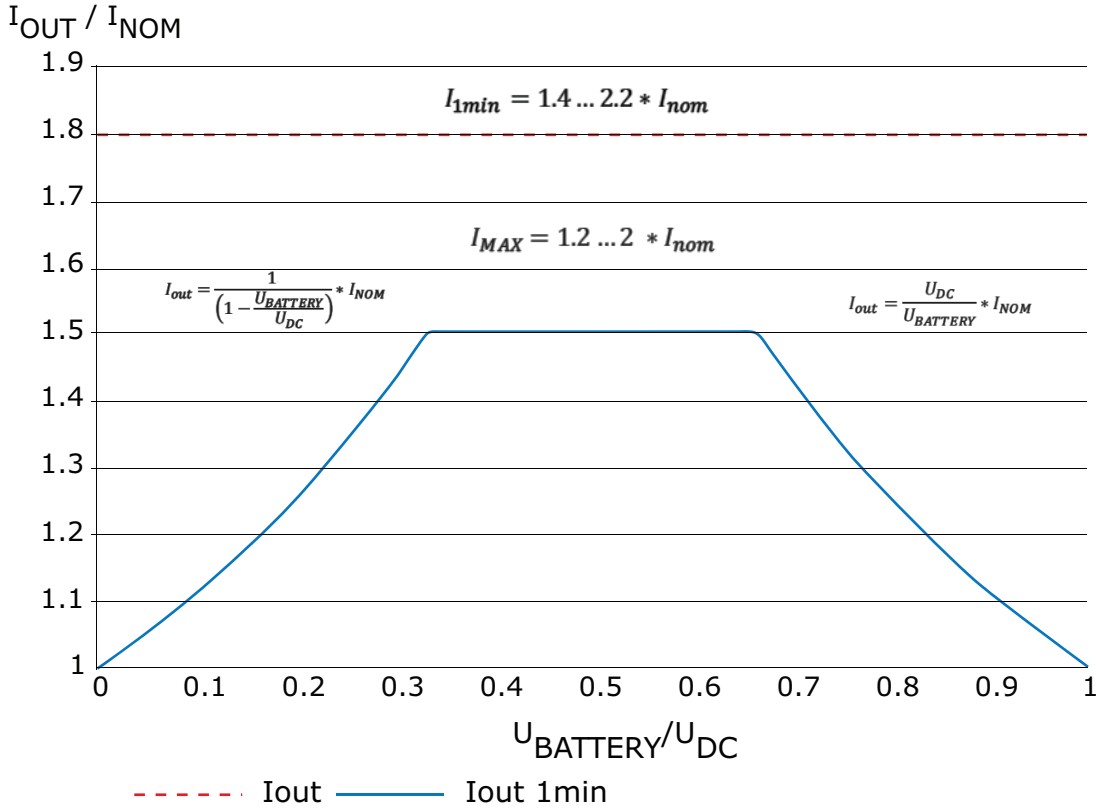

Figure 46. Current capability of a DC/DC converter

NOTE! $I_{NOM} = I_1 \sim 1.2 * I_2$

An example curve in above shows the combined current limit line for the DC/DC converter depending on the ratio of storage voltage and converter DC-link voltage. The nominal current of a DC/DC converter is defined as I 1 in the DC/DC converter rating plate which is approximately 1.2*I 2 depending on the frame size. The value of I_{MAX} and I_{1min} vary depending on voltage class and switching frequency of the DC/DC converter. These values are higher when the switching frequency is decreased to 4 kHz and higher also for the NX5 voltage class units. In addition, the 1min limit applies only to frame sizes FI9-FI14.

NOTE! The nominal current of the DC/DC converter is not the same as the inverter current rating. You may roughly calculate the DC/DC converter current rating by multiplying the inverter current rating by 1.2. To have an overview, see the following table where the DC/DC converter current ratings for NX6 are given.

Tel. +358 (0) 201 2121 • Fax +358 (0)201 212 285

Table 5. DC/DC converter current ratings for NX6

Air cooled NX6 drives		1025 VDC link voltage				1100 VDC		1025 VDC		931 VDC	
		I_{nom}		I_{1min}		I_{max}		I_{max}		I_{max}	
Unit type	Frame	I_{DC} nominal (A)	P_{DC} nom (KW)	I_{1min} 5kHz (A)	I_{1min} 3.6kHz (A)	I_{out} 5kHz (A)	I_{out} 3.6kHz (A)	I_{out} 5kHz (A)	I_{out} 3.6kHz (A)	I_{out} 5kHz (A)	I_{out} 3.6kHz (A)
NXI00106A0TOCSSA	FI6/IP21	11.1	11			14.6	18.3	14.6	18.3	14.6	18.3
NXI00136A0TOCSSA	FI6/IP21	14.6	15			19	23.7	19	23.7	19	23.7
NXI00186A0TOCSSA	FI6/IP21	20.3	21			26.3	32.9	26.3	32.9	26.3	32.9
NXI00226A0TOCSSA	FI6/IP21	25	25			32	40	32	40	32	40
NXI00276A0TOCSSA	FI6/IP21	31	32			39	49	39	49	39	49
NXI00346A0TOCSSA	FI6/IP21	39	40			49	60	49	60	49	60
NXI00416A0TOCSSA	FI7/IP21	47	48			60	73	60	73	60	73
NXI00526A0TOCSSA	FI7/IP21	60	61			56	75	61	80	69	91
NXI00626A0TOCSSA	FI8/IP100	71	73			90	108	90	108	90	108
NXI00806A0TOCSSA	FI8/IP100	92	95			91	143	117	143	117	143
NXI01006A0TOCSSA	FI8/IP100	117	119			122	167	133	180	146	180
NXI01256A0TOISF	FI9/IP100	146	149	188	250	183	228	183	228	183	228
NXI01446A0TOISF	FI9/IP100	168	172	216	288	210	263	210	263	210	263
NXI01706A0TOISF	FI9/IP100	198	203	255	340	231	309	248	311	248	311
NXI02086A0TOISF	FI9/IP100	245	251	312	416	231	309	248	325	264	345
NXI02616A0TOISF	FI10/IP100	308	315	392	522	382	477	382	477	382	477
NXI03256A0TOISF	FI10/IP100	383	393	488	650	450	594	475	594	475	594
NXI03856A0TOISF	FI10/IP100	454	465	578	770	450	600	490	640	530	680
NXI04166A0TOISF	FI10/IP100	490	503	624	832	450	600	490	640	530	680
NXI04606A0TOISF	FI12/IP100	548	562	690	920	673	841	673	841	673	841
NXI05026A0TOISF	FI12/IP100	598	613	753	1004	734	918	734	918	734	918
NXI05906A0TOISF	FI12/IP100	703	721	885	1180	863	1079	863	1079	863	1079
NXI06506A0TOISF	FI12/IP100	775	794	975	1300	870	1150	951	1189	1030	1189
NXI07506A0TOISF	FI12/IP100	894	916	1125	1500	870	1150	977	1200	1030	1300
NXI08206A0TOISF	FI12/IP100	977	1002	1230	1640	870	1150	977	1200	1030	1300

24-hour support +358 (0)201 212 575 • Email: service@vacon.com

Air cooled NX6 drives		1025 VDC link voltage				1100 VDC		1025 VDC		931 VDC	
		I_{nom}		I_{1min}		I_{max}		I_{max}		I_{max}	
Unit type	Frame	I_{DC} nominal (A)	P_{DC} nom (KW)	I_{1min} 5kHz (A)	I_{1min} 3.6kHz (A)	I_{out} 5kHz (A)	I_{out} 3.6kHz (A)	I_{out} 5kHz (A)	I_{out} 3.6kHz (A)	I_{out} 5kHz (A)	I_{out} 3.6kHz (A)
NXI09206AOTOISF	FI13/IP100	1102	1130	1380	1840	1275	1683	1346	1683	1346	1683
NXI10306AOTOISF	FI13/IP100	1234	1265	1545	2060	1275	1645	1414	1780	1448	1884
NXI11806AOTOISF	FI13/IP100	1414	1449	1770	2360	1275	1645	1414	1780	1448	1884
NXI15006AOTOISF	FI14/IP100	1797	1842	2250	3000	2196	2745	2196	2745	2196	2745
NXI19006AOTOISF	FI14/IP100	2276	2333	2850	3800	2568	3477	2696	3477	2781	3477
NXI22506AOTOISF	FI14/IP100	2696	2763	3375	4500	2568	3290	2696	3474	2896	3733

A dedicated tool is available to help in the selection of a correct power unit based on either power or current profile. Examples of dimensioning based on storage power and current profiles are displayed in figures below.

The intermediate steps between I_{NOM} and I_{MAX} can be calculated with the formulas given in the previous figure. The shape of the output current curve is due to the limitation of the I_1 in the rating plate and the relation between input and output current of the DC/DC converter. The plateau part of the curve is due to thermal performance of the DC/DC converter. Current capability of the DC/DC converter may seem complicated but it simply yields a constant power capability up to the point I_{MAX} where current cannot be increased anymore. The relation between current and power can be examined in the following graphs. Constant power is available as long as the voltage is sufficiently high.

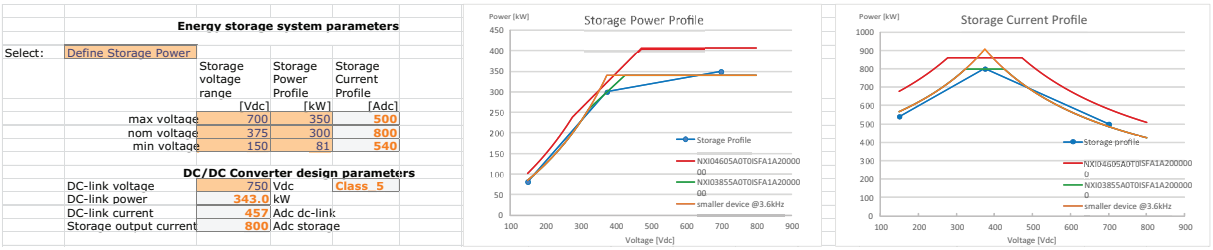

Figure 47. Power unit selection tool example based on storage current profile

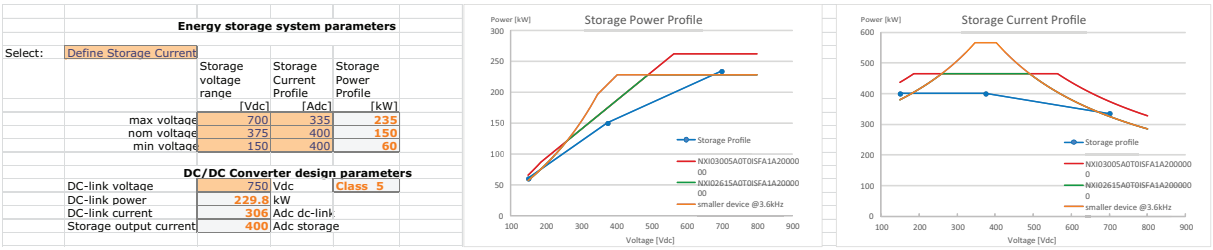

Figure 48. Power unit selection tool example based on storage current profile

Based on the cases in figures above it is advantageous to limit the power at low battery voltage to limit the current to a reasonable value. This helps to allow the use of a smaller frame size. Filter size is also proportional to current. Therefore, high energy storage voltage is preferred from the DC/DC converter sizing perspective.

8. INFORMATION TO ACQUIRE FROM CUSTOMERS

It is important to find enablers and limiting factors of the customer system. The following list is, in priority order, the information to be acquired from customer system to continue the discussion of the offering.

1. Single line diagram
2. Short description of usage case / mission profile / wanted behavior
3. Battery (storage) information
   - Voltage window [$U_{Bat,min}$, $U_{Bat,nom}$, $U_{Bat,max}$]
   - Power or current requirement at those voltage points [$U_{Bat,min}$, $U_{Bat,nom}$, $U_{Bat,max}$]
   - Balance/Maintenance charger?
4. Grid information
   - Grid code demands?
5. Preferred topology if any (and why)
6. System control overview

Tel. +358 (0) 201 2121 • Fax +358 (0)201 212 285

VACON®

www.danfoss.com

Document ID:
DPD01887A
Rev. A

Vacon Ltd
Member of the Danfoss Group
Runsorintie 7
65380 Vaasa
Finland