ENGINEERING
TOMORROW

Product Catalog

Vickers by Danfoss®

Industrial IM Series Heavy Duty Metric Mill Type Cylinders

Series IM
Standard: ISO 6022
25 Mpa (250 bar)

Table of Contents

Design Features

Specifications
Bore sizes: 40 to 320 mm
Rod sizes: 25 to 220 mm
Design Pressure: 25 Mpa (250 bar)
Proof Pressure: 37.5 Mpa (375 bar)
Maximum Rod Speed: 1.0m/s

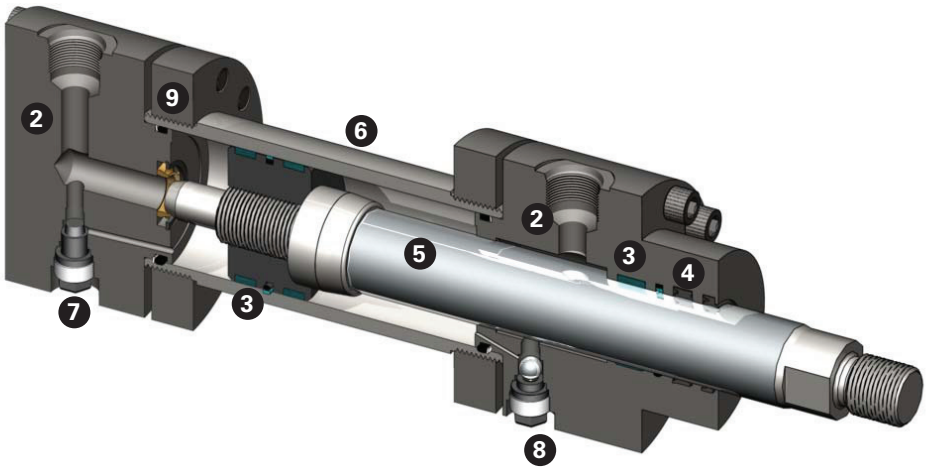

1. Global Design
Engineered for ISO6022/DIN 24333 interchangeability with the durability required for heavy duty applications.

2. Heads and Cap
One piece round construction head and caps are manufactured from high strength material and precise machining with a pilot diameter to ensure accurate alignment with the cylinder bore. An integral bearing and seal design featuring heavy wear bands resists side loads. The wide separation of these wear bands reduces bearing stresses, and maximizes cylinder service.

3. Special Wearbands
Metal-to-metal contact is eliminated, providing superior wear ability, increased load carrying capability, and prolonged cylinder life.

4. Sure Seal Sealing System
Carefully selected wiper and seal combinations are mated with a hard chrome plated piston rod to deliver exceptional all-around performance and durability for rod sealing system. Normal sealing system uses a combination of double lip rod seal along with an o-ring energized PTFE seal and a double lip rod wiper. The high and low temperature rod sealing system uses one more PTFE seal instead of the lip seal to provide positive static and dynamic sealing at low and high pressures.

Piston sealing system offers a selection of highly efficient piston seal materials and wide wear bands that rides smoothly within the precision-honed cylinder body to provide extended piston seal life. The use of bi-directional piston seals eliminates trapped pressures.

5. Piston Rod
Hard chrome plated, case hardened rod in carbon or alloy steel are available to give maximum durability and flexibility depending on application. Heavier plating is available as a custom option, in addition to various types of stainless steel.

6. High strength Steel Tubing
High strength steel is used to insure long cylinder life.

7. Captive Screws
Inadvertent removal of cushion screws is prevented, while still allowing a full range of adjustment.

8. Fully Adjustable Cushioning System
This design has been engineered to provide the ability to tune the cushion performance for an optimized deceleration profile. Our patented floating ring cushion seal or an alternate ball check design allows maximum acceleration. This excellent acceleration profile translates into faster cycle times and increased machine production.
The floating cushion sleeve permits very close seal contact without high loading. The sleeve seals against the cap and provides a very effective seal to trap the fluid. The sleeve is also free to move in axial direction and functions as a fluid check, which permits nearly full flow for quick acceleration.

9. Threaded Body Flanges
The threaded steel flange design has superior bending stress capacity, durability, and increased safety factors of shear over similar welded flange type designs.

High strength bolts are used for assembly with hardened steel washers to guarantee failure free performance.

10. Acceptance Test
Hydraulic cylinders are tested in accordance with ISO 10100:2001, Hydraulic fluid power — Cylinders — Acceptance tests.

How To Order

Standard Cylinders

Vickers by Danfoss has created an easy system for ordering IM25 series hydraulic heavy duty cylinders. This system has been developed to improve our service to you. The model code consists of 29 alpha-numeric digits which fully describe the most common stan-dard options offered on IM25 series cylinders.
To specify your series IM25 series cylinder, review the following pages for full description of each option available and select the desired code.
This model code system will:

- Simplify the re-order process
  Each Vickers by Danfoss cylinder is assigned a 29 digit model code. That code is unique to particular cylinder description. That way, when you re-order your IM25 Series cylinder, you are assured of exactly the same top quality cylinder design.
- Improve identification
  Every cylinder has its 29 digit model code clearly marked on the product. Each 29 digit code completely describes a specific cylinder. This allows seal and replacement components to be easily identified in the field.
- Facilitate communications
  This fully descriptive model code system allows you to work directly with your local sales engineer to identify and service your cylinder.

NOTE: See page 6 for a summary of model code options.

Custom Cylinders
New Cylinders

Although the model code has been arranged to cover the vast majority of available options, there will be occasions when you re-quire an option which cannot be coded. When specifying such an option, enter a "X" for the appropriate item in the 29 digit model code, and then describe your requirements. For example, if you have an application which requires a custom thread on the end of the piston rod, enter an "X" for item 24. Then add a full descrip-tion at the end of the model code, such as "With 50mm total rod projection and M22 x 1.5 thread 30mm long." Or if you have an application which requires options like Transducer and Rod boot, enter "X" for item 30. Then add a full description at the end of the model code, such as "Transducer and Rod boot". The cylinder will then be given a unique design number on the receipt of order (as explained in the next section.)

Replacement Cylinders

Every custom cylinder is assigned a unique identification number. When ordering a replacement cylinder, simply give the 29 digit model code or the unique identification number to your local Cylinder Sales representative.

Replacement Parts

Each identification number is stored in quick retrieval computer-ized storage system. This gives our field sales representatives rapid access to assist you in identifying and specifying genuine Danfoss replacement parts.

How to use information and select cylinder in this catalog

Step 1: Find the Piston and Annulus area for the application A_B, Piston area = Push Load/Pressure, A_A, Annulus area= Pull Load/Pressure
Note: Max pressure allowable is 25 Mpa (250 bar)

Step 2: Select the bore & rod combination from page 31 which will have areas greater or equal to A_B and A_A respectively

Step 3: Select the required mounting for the application refer page 29 for mounting types and selection guide

Step 4: Maximum allowable extended length for pushing applica-tion should be checked from buckling chart on page 33 for the selected bore, rod and stroke combination. If selected combina-tion is not safe next higher size rod diameter is recommended (Repeat steps 1 to 4 for the new selection)

Step 5: Select the appropriate sealing system, refer to page 18 for seal selection guide

Step 6: If the application demands cushion at end of stroke refer to the cushion calculation details on page 35

Step 7: Select the required port, refer to page 20 port selection. To check if the port and cushion position selected is feasible, refer to page 22

Step 8: If the application demands position sensor refer to trans-ducer section on page 23 to help select correct transducer and respective mounting dimensions

Step 9: Refer to mounting accessories section on page 14 to select the respective accessories

Step 10: Refer the model code section on page 6 to help you code the cylinder per the selected parameters. For any custom options a clear description to be included with the model code

Note: Application data sheet should be filled and sent to sales repre-sentative to help you select correct cylinder configuration.

Cylinder Identification Plate

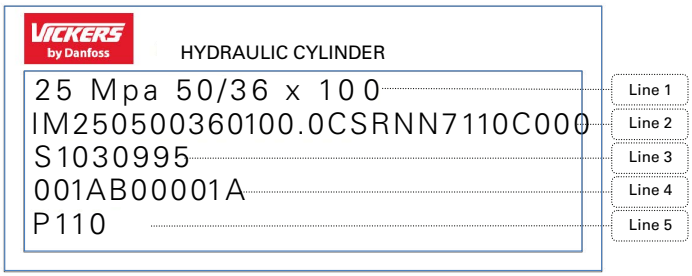

Line 1: Cylinder Pressure Rating Bore/Rod x Stroke
Line 2: Unit Part Number (29 Digit Model Code) without "-"
Line 3: OA number or Sale order number
Line 4: Unique design number
Line 5: Plant and Date code

Model Codes

IM25	-	040	-	028	-	0100.1	-	AS	-	A	-	N	-	N	-	7	-	1	-	1	-	0	-	C	-	000	-	A	-	X
1, 2, 3, 4		5, 6, 7		8, 9, 10		11, 12, 13, 14, 15		16, 17		18		19		20		21		22		23		24		25		26, 27, 28		29		30

1, 2, 3, 4 Series

IM25 – Vickers by Danfoss Hyd. Heavy duty cylinder 25 Mpa

Bore - Rod Diameter

Bore(mm) 5, 6, 7	Rod(mm) 8, 9, 10
040	025
040	028
050	032
050	036
063	040
063	045
080	050
080	056
100	063
100	070
125	080
125	090
140	090
140	100
160	100
160	110
180	110
180	125
200	125
200	140
220	140
220	160
250	160
250	180
280	180
280	200
320	200
320	220

11, 12, 13, 14, 15 Stroke

Items 11,12,13,14 indicate stroke length from 0 mm through 9999 mm. & 15 indicates decimal from 0.1 to 0.9mm.

16, 17 Mounting

AD Double Rod, Side Lug
AS Side Lug (MS2)
CM Cap, Fixed Plain Eye (MP3)
CS Cap, Fixed Eye With Spherical Bearing(MP5)
FD Double Rod, Head Circular Flange
FS Head Circular Flange (MF3)
RS Cap Circular Flange (MF4)
TT Intermediate Trunnion (MT4)
TD Double Rod, Intermediate Trunnion
XX Custom

18 Cushion Location

Cushions are located as shown in below fig. when viewing cylinder from head end (mounting end of double rod cylinders.) "_" in table indicates no cushions.

Code	Head	Cap
A	-	-
B	-	1
C	-	2
D	-	3
E	-	4
F	1	-
G	2	-
H	3	-
J	4	-
K	1	1
L	1	2
M	1	3
N	1	4
P	2	1
R	2	2
S	2	3
T	2	4
U	3	1
V	3	2
W	3	3
Y	3	4
1	4	1
2	4	2
3	4	3
4	4	4

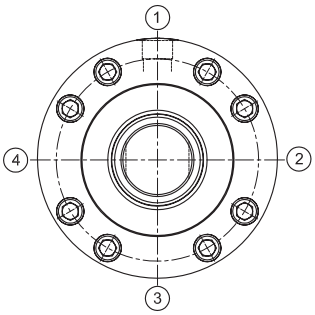

Cushion & Port Positions view from rod end side

19 Rod sealing systems^

N – Normal
L – Low Friction
T – High Temperature
X – Custom

20 Piston sealing systems^

N – Normal
L – Low Friction
T – High Temperature
X – Custom

^ Consult nearest sales office for other sealing system

21 Port Type

Code	Type
3	SAE
4	Oversize SAE
6	Flange ports to ISO 6162-1
E	Oversize Flange ports to ISO 6162-1
F	Flange ports to ISO 6162-2
G	Oversize Flange ports to ISO 6162-2
H	Flange ports to ISO6164-1
L	Oversize Flange ports to ISO 6164-1
N	Flange ports to ISO 6164-2
P	Oversize Flange ports to ISO 6164-2
7	BSPP
8	Oversize BSPP
A	Metric to ISO 6149-1
B	Oversize Metric to ISO 6149-1
X	Custom

22 Head Port Position

Code	1st port	2nd port
1	1	-
2	2	-
3	3	-
4	4	-
A	1	2
B	1	3
C	1	4
E	2	3
F	2	4
H	3	4

23 Cap Port Position

Code	1st port	2nd port
1	1	-
2	2	-
3	3	-
4	4	-
5	5	-
A	1	2
B	1	3
C	1	4
D	1	5
E	2	3
F	2	4
G	2	5
H	3	4
J	3	5

24 Rod End Types

Code	Type
0	Male metric thread
1	Female metric thread
X	Custom rod end

25 Rod Material Option

Code	Description
C	Carbon steel chrome plated (Std.)
H	Carbon steel case hardened & chrome plated
B	Alloy steel chrome plated
G	Alloy steel case hardened & chrome plated
S	Stainless Steel 17-4

26, 27, 28 Extra Rod Projection

Item 25,26,27 indicates extra rod projection from 0 mm to 999 mm

29 Design Level

A - First Design

30 Custom

Special Option

Mounting Style & Installation Dimensions

AS: Side Lug Mount (MS2)

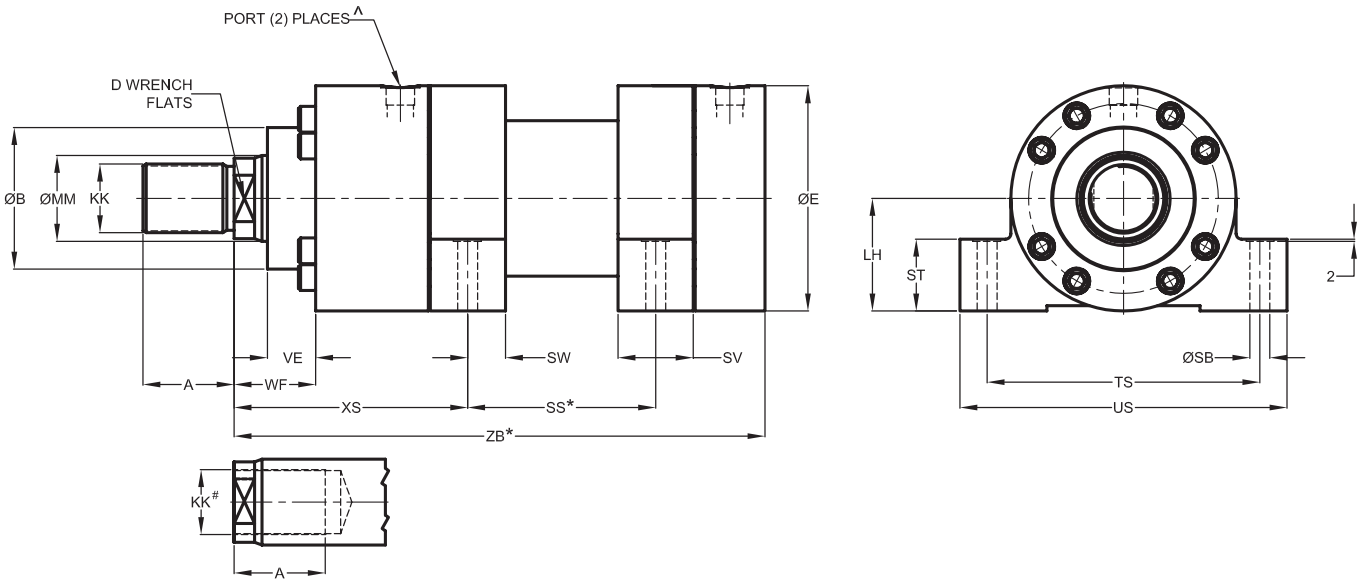

Bore Ø	MM Rod Ø	D	KK	A	B f8	WF	VE	E	XS	SS	SV	SW	SB H13	ST	TS js13	US	LH	Stroke min.	ZB* max.
40**	25	19	M20 x 1.5	28	52	47	29	86	118	50	30	15	11	32	110	135	45	0	229
	28	22	M20 x 1.5	28	52	47	29	86	118	50	30	15	11	32	110	135	45	0	229
50	32	27	M27 x 2	36	63	47	29	96	135.5	45	35	17.5	11	37	130	155	55	0	244
	36	30	M27 x 2	36	63	47	29	96	135.5	45	35	17.5	11	37	130	155	55	0	244
63	40	32	M33 x 2	45	75	53	32	120	154	49	40	20	13.5	42	150	180	65	0	274
	45	36	M33 x 2	45	75	53	32	120	154	49	40	20	13.5	42	150	180	65	0	274
80	50	41	M42 x 2	56	90	60	36	140	171.5	52	50	25	17.5	47	180	220	75	0	305
	56	46	M42 x 2	56	90	60	36	140	171.5	52	50	25	17.5	47	180	220	75	0	305
100	63	50	M48 x 2	63	110	68	41	168	189	61	60	30	22	57	210	255	90	0	340
	70	60	M48 x 2	63	110	68	41	168	189	61	60	30	22	57	210	255	90	0	340
125	80	65	M64 x 3	85	132	76	45	206	218	75	70	35	26	67	255	305	105	0	395
	90	75	M64 x 3	85	132	76	45	206	218	75	70	35	26	67	255	305	105	0	395
140	90	75	M72 x 3	90	145	76	45	226	240.5	70	85	42.5	30	72	290	350	115	15	430
	100	85	M72 x 3	90	145	76	45	226	240.5	70	85	42.5	30	72	290	350	115	15	430
160	100	85	M80 x 3	95	160	85	50	252	270	65	105	52.5	33	77	330	400	135	40	465
	110	95	M80 x 3	95	160	85	50	252	270	65	105	52.5	33	77	330	400	135	40	465
180	110	95	M90 x 3	106	185	95	55	288	291.5	69	115	57.5	40	92	360	440	150	46	505
	125	110	M90 x 3	106	185	95	55	288	291.5	69	115	57.5	40	92	360	440	150	46	505
200	125	110	M100 x 3	112	200	101	61	308	322.5	73	125	62.5	40	97	385	465	160	52	550
	140	120	M100 x 3	112	200	101	61	308	322.5	73	125	62.5	40	97	385	465	160	52	550
220**	140	120	M125 x 4	125	235	113	71	356	369.5	75	155	77.5	45	102	445	530	185	80	637
	160	140	M125 x 4	125	235	113	71	356	369.5	75	155	77.5	45	102	445	530	185	80	637
250	160	140	M125 x 4	125	250	113	71	390	382.5	75	155	77.5	52	112	500	600	205	80	650
	180	160	M125 x 4	125	250	113	71	390	382.5	75	155	77.5	52	112	500	600	205	80	650
280**	180	160	M160 x 4	160	295	136	88	450	415.5	124	155	77.5	52	142	550	650	235	31	752
	200	180	M160 x 4	160	295	136	88	450	415.5	124	155	77.5	52	142	550	650	235	31	752
320	200	180	M160 x 4	160	320	136	88	500	435	85	190	95	62	142	610	730	255	105	760
	220	200	M160 x 4	160	320	136	88	500	435	85	190	95	62	142	610	730	255	105	760

All dimensions are in mm.

* Stroke addition required to this value

** Non ISO Bore Diameters

\# Female rod end applicable to larger rod for each bore.

For stroke tolerance and mounting tolerance refer page 32

^ For port size and type refer page 20

Mounting Style & Installation Dimensions (Continued...) CM: Cap Fixed Plain Eye Mount (MP3)

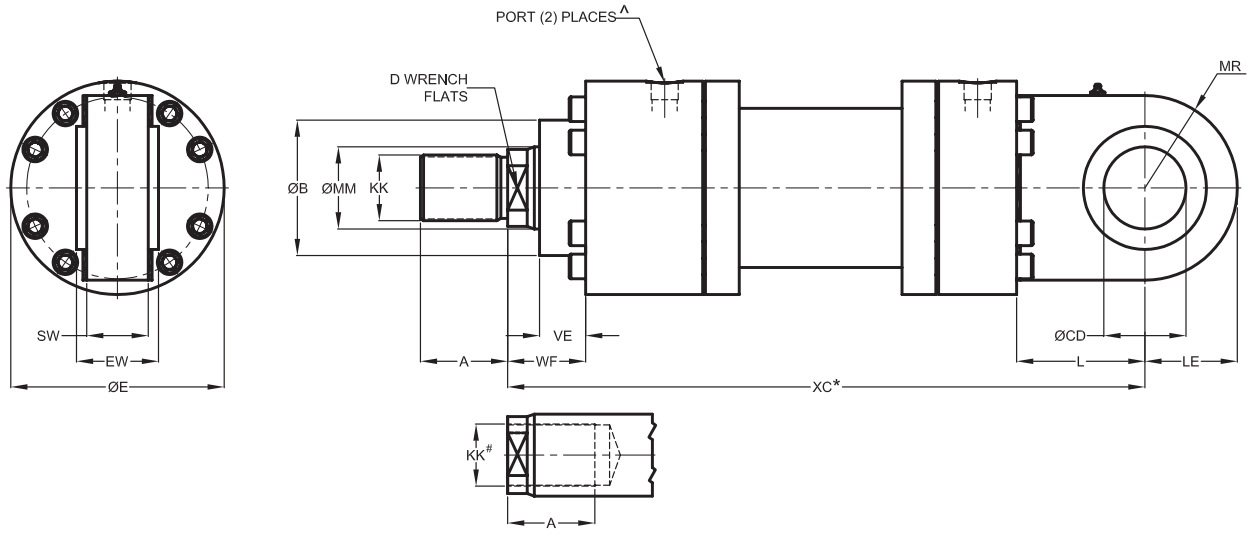

Bore Ø	MM Rod Ø	D	KK	A	B f8	WF	VE	E	CD H9	MR	L	EW h12	SW	LE	XC*
40**	25	19	M20 x 1.5	28	52	47	29	86	25	35	53	25	22	35	282
	28	22	M20 x 1.5	28	52	47	29	86	25	35	53	25	22	35	282
50	32	27	M27 x 2	36	63	47	29	96	32	40	61	32	27	40	305
	36	30	M27 x 2	36	63	47	29	96	32	40	61	32	27	40	305
63	40	32	M33 x 2	45	75	53	32	120	40	45	74	40	35	45	348
	45	36	M33 x 2	45	75	53	32	120	40	45	74	40	35	45	348
80	50	41	M42 x 2	56	90	60	36	140	50	60	90	50	40	60	395
	56	46	M42 x 2	56	90	60	36	140	50	60	90	50	40	60	395
100	63	50	M48 x 2	63	110	68	41	168	63	70	102	63	52	70	442
	70	60	M48 x 2	63	110	68	41	168	63	70	102	63	52	70	442
125	80	65	M64 x 3	85	132	76	45	206	80	90	125	80	60	90	520
	90	75	M64 x 3	85	132	76	45	206	80	90	125	80	60	90	520
140	90	75	M72 x 3	90	145	76	45	226	90	100	150	90	65	100	580
	100	85	M72 x 3	90	145	76	45	226	90	100	150	90	65	100	580
160	100	85	M80 x 3	95	160	85	50	252	100	112	152	100	84	112	617
	110	95	M80 x 3	95	160	85	50	252	100	112	152	100	84	112	617
180	110	95	M90 x 3	106	185	95	55	288	110	130	185	110	88	130	690
	125	110	M90 x 3	106	185	95	55	288	110	130	185	110	88	130	690
200	125	110	M100 x 3	112	200	101	61	308	125	145	206	125	102	145	756
	140	120	M100 x 3	112	200	101	61	308	125	145	206	125	102	145	756
220**	140	120	M125 x 4	125	235	113	71	356	160	170	253	160	130	170	890
	160	140	M125 x 4	125	235	113	71	356	160	170	253	160	130	170	890
250	160	140	M125 x 4	125	250	113	71	390	160	180	253	160	130	180	903
	180	160	M125 x 4	125	250	113	71	390	160	180	253	160	130	180	903
280**	180	160	M160 x 4	160	295	136	88	450	200	220	320	200	138	220	1072
	200	180	M160 x 4	160	295	136	88	450	200	220	320	200	138	220	1072
320	200	180	M160 x 4	160	320	136	88	500	200	230	320	200	160	230	1080
	220	200	M160 x 4	160	320	136	88	500	200	230	320	200	160	230	1080

All dimensions are in mm.

* Stroke addition required to this value

** Non ISO Bore Diameters

\# Female rod end applicable to larger rod for each bore.
For stroke tolerance and mounting tolerance refer page 32

^ For port size and type refer page 20

Mounting Style & Installation Dimensions (Continued...)

CS: Cap Fixed Eye With Spherical Bearing Mount (MP5)

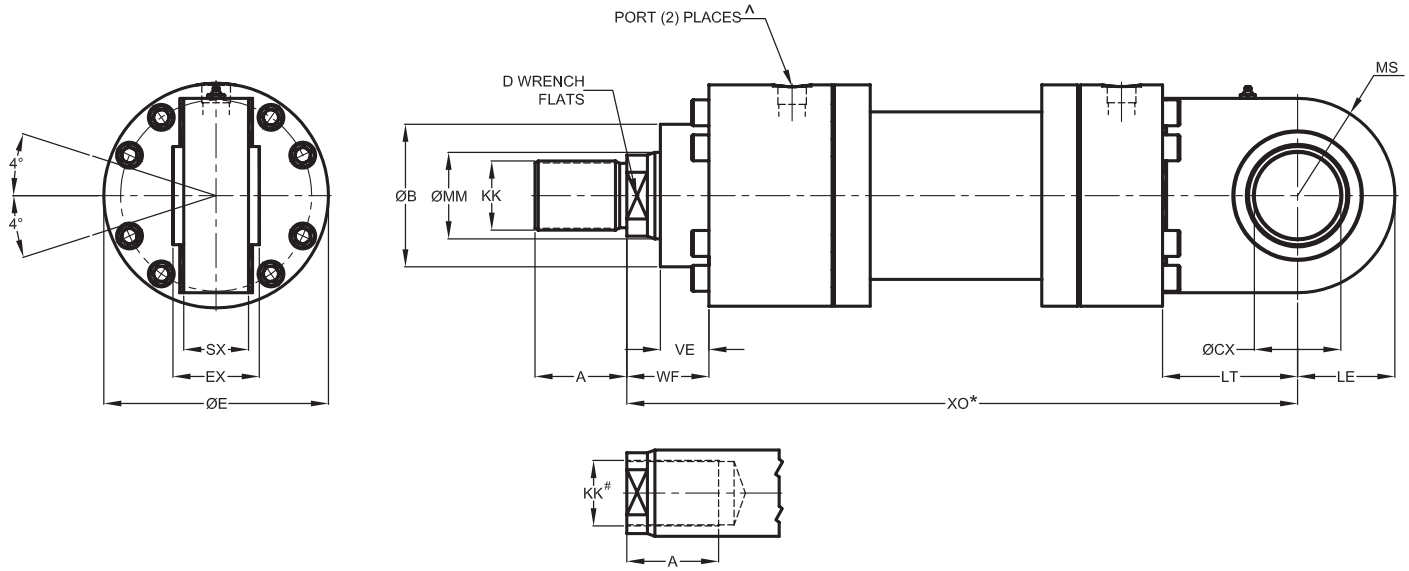

Bore Ø	MM Rod Ø	D	KK	A	B f8	WF	VE	E	CX H7	MS	LT	EX h12	SX	LE	XO*
40**	25	19	M20 x 1.5	28	52	47	29	86	25	35	53	25	22	35	282
	28	22	M20 x 1.5	28	52	47	29	86	25	35	53	25	22	35	282
50	32	27	M27 x 2	36	63	47	29	96	32	40	61	32	27	40	305
	36	30	M27 x 2	36	63	47	29	96	32	40	61	32	27	40	305
63	40	32	M33 x 2	45	75	53	32	120	40	45	74	40	35	45	348
	45	36	M33 x 2	45	75	53	32	120	40	45	74	40	35	45	348
80	50	41	M42 x 2	56	90	60	36	140	50	60	90	50	40	60	395
	56	46	M42 x 2	56	90	60	36	140	50	60	90	50	40	60	395
100	63	50	M48 x 2	63	110	68	41	168	63	70	102	63	52	70	442
	70	60	M48 x 2	63	110	68	41	168	63	70	102	63	52	70	442
125	80	65	M64 x 3	85	132	76	45	206	80	90	125	80	60	90	520
	90	75	M64 x 3	85	132	76	45	206	80	90	125	80	60	90	520
140	90	75	M72 x 3	90	145	76	45	226	90	100	150	90	65	100	580
	100	85	M72 x 3	90	145	76	45	226	90	100	150	90	65	100	580
160	100	85	M80 x 3	95	160	85	50	252	100	112	152	100	84	112	617
	110	95	M80 x 3	95	160	85	50	252	100	112	152	100	84	112	617
180	110	95	M90 x 3	106	185	95	55	288	110	130	185	110	88	130	690
	125	110	M90 x 3	106	185	95	55	288	110	130	185	110	88	130	690
200	125	110	M100 x 3	112	200	101	61	308	125	145	206	125	102	145	756
	140	120	M100 x 3	112	200	101	61	308	125	145	206	125	102	145	756
220**	140	120	M125 x 4	125	235	113	71	356	160	170	253	160	130	170	890
	160	140	M125 x 4	125	235	113	71	356	160	170	253	160	130	170	890
250	160	140	M125 x 4	125	250	113	71	390	160	180	253	160	130	180	903
	180	160	M125 x 4	125	250	113	71	390	160	180	253	160	130	180	903
280**	180	160	M160 x 4	160	295	136	88	450	200	220	320	200	138	220	1072
	200	180	M160 x 4	160	295	136	88	450	200	220	320	200	138	220	1072
320	200	180	M160 x 4	160	320	136	88	500	200	230	320	200	160	230	1080
	220	200	M160 x 4	160	320	136	88	500	200	230	320	200	160	230	1080

All dimensions are in mm.

* Stroke addition required to this value

** Non ISO Bore Diameters

\# Female rod end applicable to larger rod for each bore.
For stroke tolerance and mounting tolerance refer page 32

^ For port size and type refer page 20

Mounting Style & Installation Dimensions (Continued...) FS: Head Circular Flange Mount (MF3)

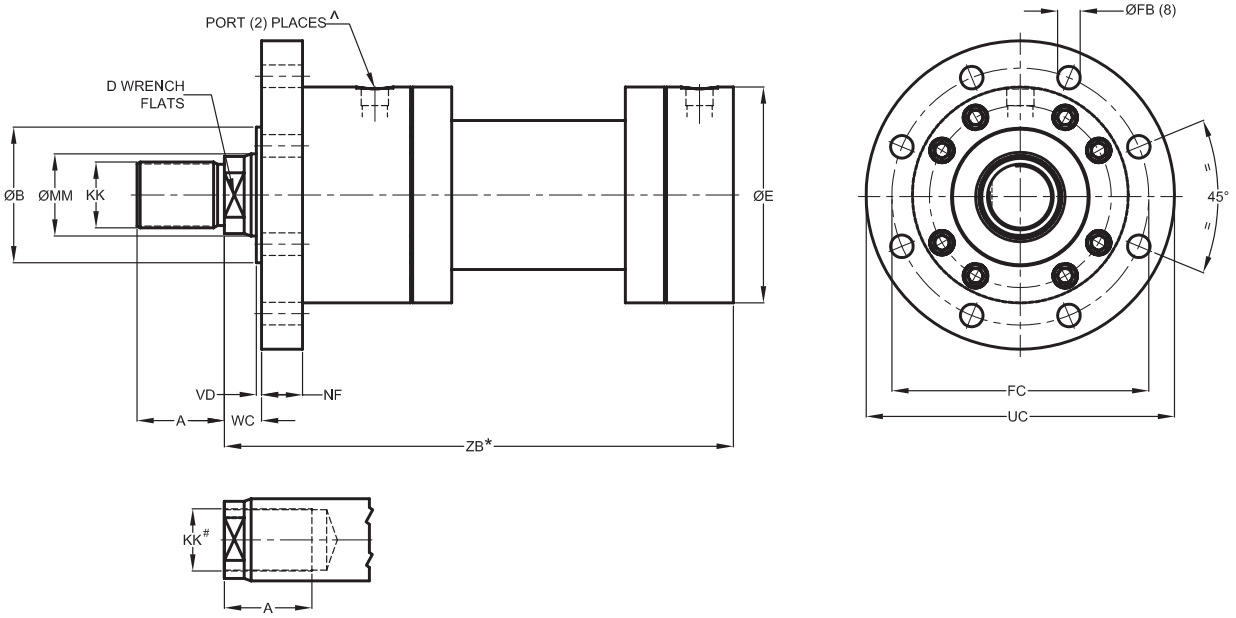

Bore Ø	Rod Rod Ø	D	KK	A	B f8	VD	WC	E	NF js13	FB H13	FC js13	UC	ZB*
40**	25	19	M20 x 1.5	28	52	4	22	86	25	11	115	138	229
	28	22	M20 x 1.5	28	52	4	22	86	25	11	115	138	229
50	32	27	M27 x 2	36	63	4	22	96	25	13.5	132	155	244
	36	30	M27 x 2	36	63	4	22	96	25	13.5	132	155	244
63	40	32	M33 x 2	45	75	4	25	120	28	13.5	150	175	274
	45	36	M33 x 2	45	75	4	25	120	28	13.5	150	175	274
80	50	41	M42 x 2	56	90	4	28	140	32	17.5	180	210	305
	56	46	M42 x 2	56	90	4	28	140	32	17.5	180	210	305
100	63	50	M48 x 2	63	110	5	32	168	36	22	212	250	340
	70	60	M48 x 2	63	110	5	32	168	36	22	212	250	340
125	80	65	M64 x 3	85	132	5	36	206	40	22	250	290	395
	90	75	M64 x 3	85	132	5	36	206	40	22	250	290	395
140	90	75	M72 x 3	90	145	5	36	226	40	26	285	335	430
	100	85	M72 x 3	90	145	5	36	226	40	26	285	335	430
160	100	85	M80 x 3	95	160	5	40	252	45	26	315	360	465
	110	95	M80 x 3	95	160	5	40	252	45	26	315	360	465
180	110	95	M90 x 3	106	185	5	45	288	50	33	355	415	505
	125	110	M90 x 3	106	185	5	45	288	50	33	355	415	505
200	125	110	M100 x 3	112	200	5	45	308	56	33	385	445	550
	140	120	M100 x 3	112	200	5	45	308	56	33	385	445	550
220**	140	120	M125 x 4	125	235	8	50	356	63	39	475	500	637
	160	140	M125 x 4	125	235	8	50	356	63	39	475	500	637
250	160	140	M125 x 4	125	250	8	50	390	63	39	475	545	650
	180	160	M125 x 4	125	250	8	50	390	63	39	475	545	650
280**	180	160	M160 x 4	160	295	8	56	450	80	45	555	630	752
	200	180	M160 x 4	160	295	8	56	450	80	45	555	630	752
320	200	180	M160 x 4	160	320	8	56	500	80	45	600	675	760
	220	200	M160 x 4	160	320	8	56	500	80	45	600	675	760

All dimensions are in mm.

* Stroke addition required to this value

** Non ISO Bore Diameters

\# Female rod end applicable to larger rod for each bore.
For stroke tolerance and mounting tolerance refer page 32

^ For port size and type refer page 20

Mounting Style & Installation Dimensions (Continued...) RS:
Cap Circular
Flange Mount (MF4)

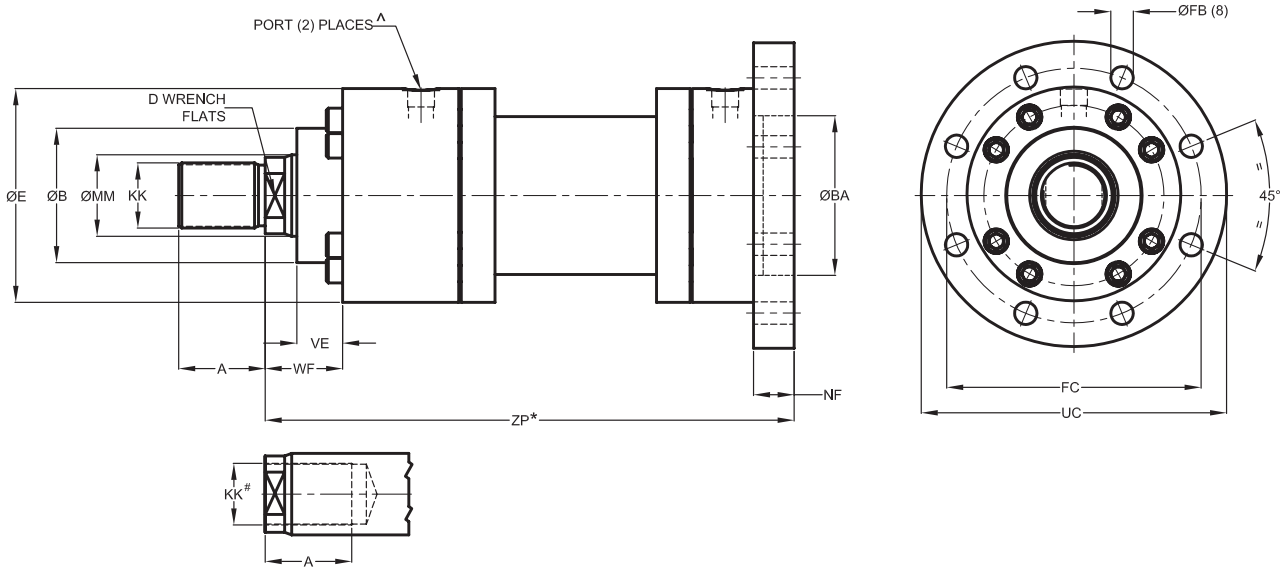

Bore Ø	MM Rod Ø	D	KK	A	B f8	WF	VE	E	BA H8	NF js13	FB H13	FC js13	UC	ZP*
40**	25	19	M20 x 1.5	28	52	47	29	86	52	25	11	115	138	250
	28	22	M20 x 1.5	28	52	47	29	86	52	25	11	115	138	250
50	32	27	M27 x 2	36	63	47	29	96	63	25	13.5	132	155	265
	36	30	M27 x 2	36	63	47	29	96	63	25	13.5	132	155	265
63	40	32	M33 x 2	45	75	53	32	120	75	28	13.5	150	175	298
	45	36	M33 x 2	45	75	53	32	120	75	28	13.5	150	175	298
80	50	41	M42 x 2	56	90	60	36	140	90	32	17.5	180	210	332
	56	46	M42 x 2	56	90	60	36	140	90	32	17.5	180	210	332
100	63	50	M48 x 2	63	110	68	41	168	110	36	22	212	250	371
	70	60	M48 x 2	63	110	68	41	168	110	36	22	212	250	371
125	80	65	M64 x 3	85	132	76	45	206	132	40	22	250	290	430
	90	75	M64 x 3	85	132	76	45	206	132	40	22	250	290	430
140	90	75	M72 x 3	90	145	76	45	226	145	40	26	285	335	465
	100	85	M72 x 3	90	145	76	45	226	145	40	26	285	335	465
160	100	85	M80 x 3	95	160	85	50	252	160	45	26	315	360	505
	110	95	M80 x 3	95	160	85	50	252	160	45	26	315	360	505
180	110	95	M90 x 3	106	185	95	55	288	185	50	33	355	415	550
	125	110	M90 x 3	106	185	95	55	288	185	50	33	355	415	550
200	125	110	M100 x 3	112	200	101	61	308	200	56	33	385	445	596
	140	120	M100 x 3	112	200	101	61	308	200	56	33	385	445	596
220**	140	120	M125 x 4	125	235	113	71	356	235	63	39	475	500	690
	160	140	M125 x 4	125	235	113	71	356	235	63	39	475	500	690
250	160	140	M125 x 4	125	250	113	71	390	250	63	39	475	545	703
	180	160	M125 x 4	125	250	113	71	390	250	63	39	475	545	703
280**	180	160	M160 x 4	160	295	136	88	450	295	80	45	555	630	822
	200	180	M160 x 4	160	295	136	88	450	295	80	45	555	630	822
320	200	180	M160 x 4	160	320	136	88	500	320	80	45	600	675	830
	220	200	M160 x 4	160	320	136	88	500	320	80	45	600	675	830

All dimensions are in mm.

* Stroke addition required to this value

** Non ISO Bore Diameters

\# Female rod end applicable to larger rod for each bore.
For stroke tolerance and mounting tolerance refer page 32

^ For port size and type refer page 20

Mounting Style & Installation Dimensions (Continued...) TT: Intermediate Fixed Trunnion Mount (MT4)

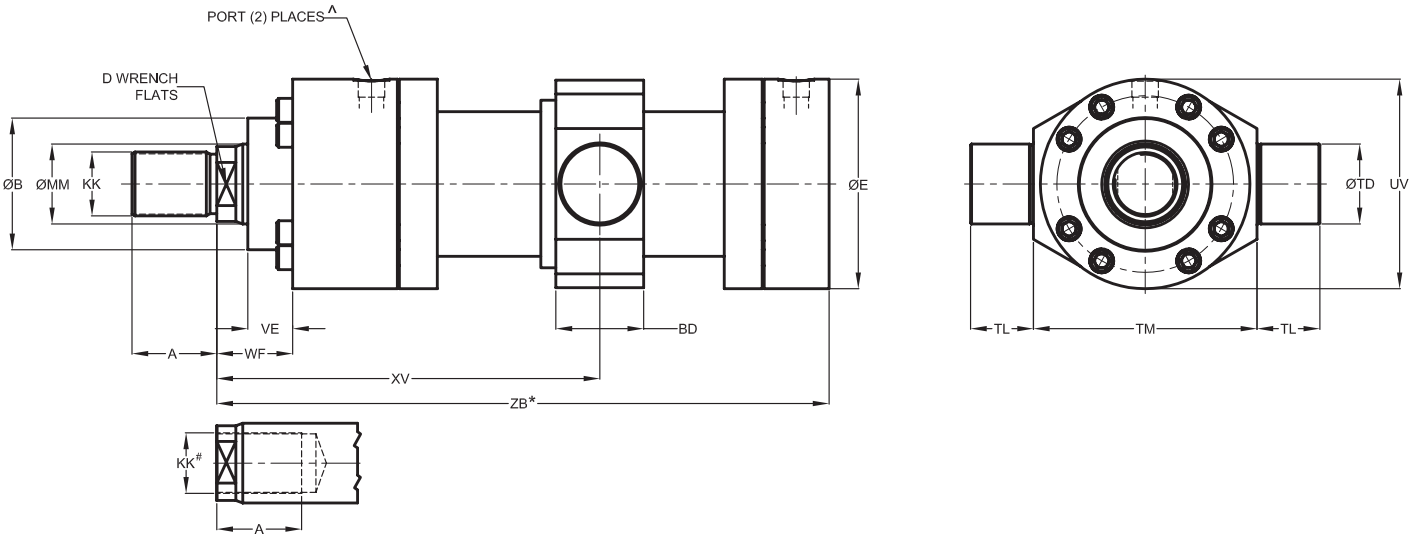

Bore Bore Ø	Rod Rod Ø	D	KK	A	B f8	WF	VE	E	BD	TD f8	TL js13	TM h12	UV	XV min.	XV* max.	XV+ std.	Stroke min.	ZB* max.
40**	25	19	M20 x 1.5	28	52	47	29	86	38	25	20	95	88	152	134	143	31	229
	28	22	M20 x 1.5	28	52	47	29	86	38	25	20	95	88	152	134	143	31	229
50	32	27	M27 x 2	36	63	47	29	96	38	32	25	112	102	167	149	158	31	244
	36	30	M27 x 2	36	63	47	29	96	38	32	25	112	102	167	149	158	31	244
63	40	32	M33 x 2	45	75	53	32	120	48	40	32	125	120	188	169	178.5	35	274
	45	36	M33 x 2	45	75	53	32	120	48	40	32	125	120	188	169	178.5	35	274
80	50	41	M42 x 2	56	90	60	36	140	58	50	40	150	150	210	185	197.5	46	305
	56	46	M42 x 2	56	90	60	36	140	58	50	40	150	150	210	185	197.5	46	305
100	63	50	M48 x 2	63	110	68	41	168	73	63	50	180	175	236.5	202.5	219.5	56	340
	70	60	M48 x 2	63	110	68	41	168	73	63	50	180	175	236.5	202.5	219.5	56	340
125	80	65	M64 x 3	85	132	76	45	206	98	80	63	224	220	280	231	255.5	71	395
	90	75	M64 x 3	85	132	76	45	206	98	80	63	224	220	280	231	255.5	71	395
140	90	75	M72 x 3	90	145	76	45	226	108	90	70	265	240	305	246	275.5	81	430
	100	85	M72 x 3	90	145	76	45	226	108	90	70	265	240	305	246	275.5	81	430
160	100	85	M80 x 3	95	160	85	50	252	118	100	80	280	270	334.5	270.5	302.5	86	465
	110	95	M80 x 3	95	160	85	50	252	118	100	80	280	270	334.5	270.5	302.5	86	465
180	110	95	M90 x 3	106	185	95	55	288	128	110	90	320	310	374	278	326	119	505
	125	110	M90 x 3	106	185	95	55	288	128	110	90	320	310	374	278	326	119	505
200	125	110	M100 x 3	112	200	101	61	308	138	125	100	335	320	415	303	359	140	550
	140	120	M100 x 3	112	200	101	61	308	138	125	100	335	320	415	303	359	140	550
220**	140	120	M125 x 4	125	235	113	71	356	178	160	125	385	370	503	311	407	220	637
	160	140	M125 x 4	125	235	113	71	356	178	160	125	385	370	503	311	407	220	637
250	160	140	M125 x 4	125	250	113	71	390	178	160	125	425	410	530	310	420	248	650
	180	160	M125 x 4	125	250	113	71	390	178	160	125	425	410	530	310	420	248	650
280**	180	160	M160 x 4	160	295	136	88	450	218	200	160	480	460	592	363	477.5	257	752
	200	180	M160 x 4	160	295	136	88	450	218	200	160	480	460	592	363	477.5	257	752
320	200	180	M160 x 4	160	320	136	88	500	218	200	160	530	510	601	354	477.5	275	760
	220	200	M160 x 4	160	320	136	88	500	218	200	160	530	510	601	354	477.5	275	760

All dimensions are in mm.

* Stroke addition required to this value

** Non ISO Bore Diameters

\# Female rod end applicable to larger rod for each bore.
For stroke tolerance and mounting tolerance refer page 32

^ For port size and type refer page 20

\+ The standard XV dimension is stroke/2 + XV (Std.) unless otherwise specified

Mounting Style & Installation Dimensions (Continued...)

Double Rod Cylinder Dimensions with Flange, Side Lug & Trunnion Mounts

FD

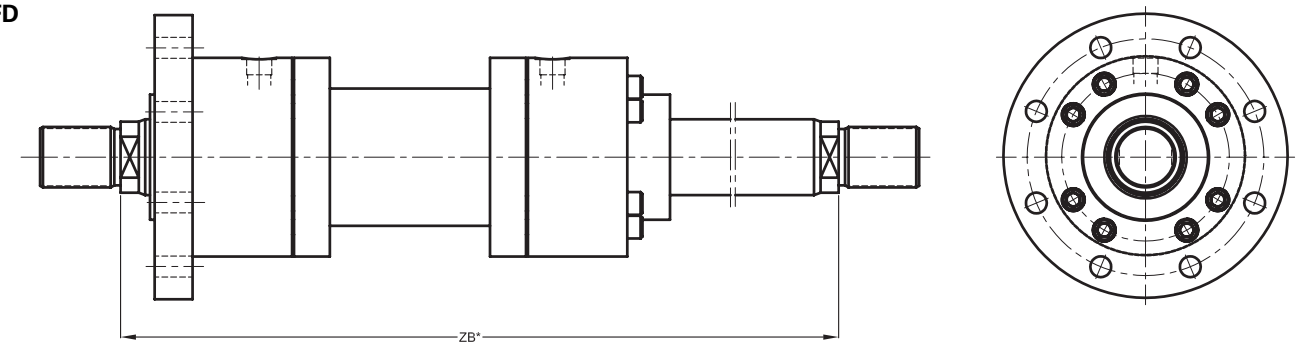

AD

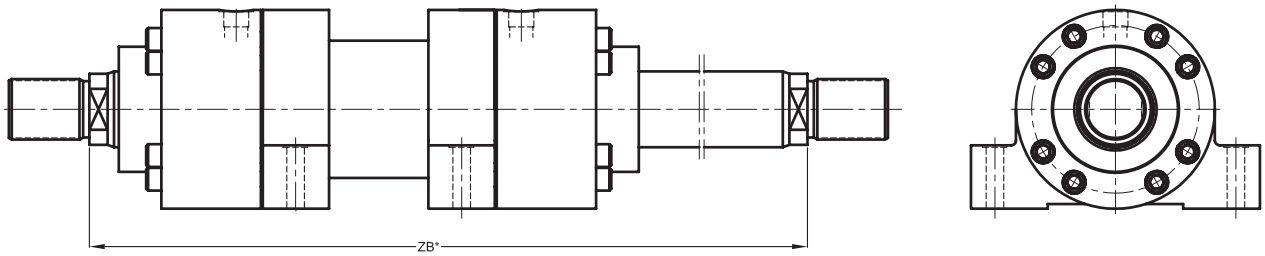

TD

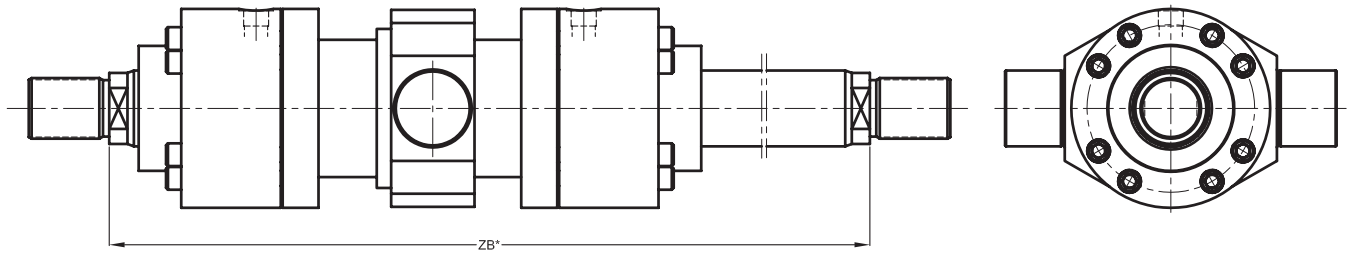

Bore Dia	40	50	63	80	100	125	140	160	180	200	220	250	280	320
ZB*	286	316	357	395	439	511	551	605	652	718	814	840	955	955

* Stroke addition required to this value
All other dimension as per single end rod

Mounting Accessories

Accessories are available which have interchangeable mounting dimensions selected in accordance with "ISO 8132:2006, Hydraulic fluid power — Single rod cylinders, 16 MPa (160 bar) medium and 25 MPa (250 bar) series —Mounting dimensions for accessories"

Rod Clevis, Female Thread

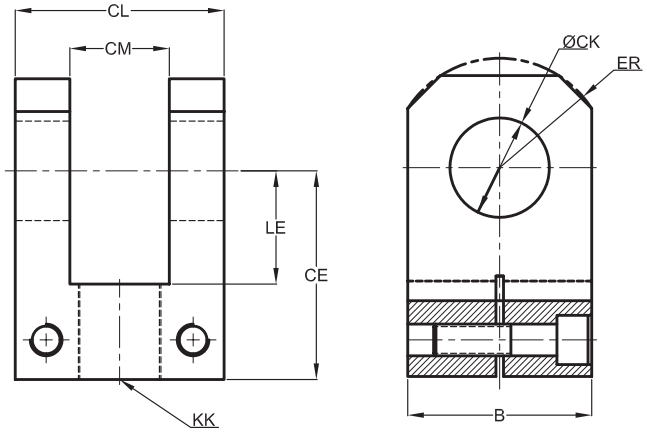

Part Number	KK 6H	CK H9	CL h16	CM A13	CE js13	LE min.	ER max.	B	Load Capacity (kN)
FRCM-025	M20 X 1.5	25	56	25	65	34	32	50	32
FRCM-032	M27 X 2	32	70	32	80	41	40	65	50
FRCM-040	M33 X 2	40	90	40	97	51	50	80	80
FRCM-050	M42 X 2	50	110	50	120	63	63	100	125
FRCM-063	M48 X 2	63	140	63	140	75	71	125	200
FRCM-080	M64 X 3	80	170	80	180	94	90	155	320
FRCM-090	M72 X 3	90	190	90	195	109	100	170	400
FRCM-100	M80 X 3	100	210	100	210	114	110	185	500

Rod Flange, Circular

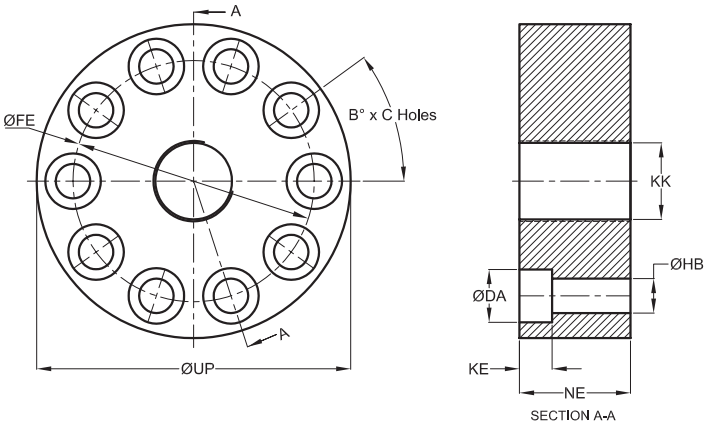

Part Number	KK 6H	FE JS13	B°	C	HB H13	NE JS13	UP max.	DA H13	KE +0.4	Load Capacity (kN)
RFCM-025	M20 X 1.5	63	60	6	9	29	82	14.5	9	32
RFCM-032	M27 X 2	78	60	6	11	37	100	17.5	11	50
RFCM-040	M33 X 2	95	45	8	13.5	46	120	20	13	80
RFCM-050	M42 X 2	120	45	8	17.5	57	150	26	17.5	125
RFCM-063	M48 X 2	150	45	8	22	64	190	33	21.5	200
RFCM-070	M56 X 2	165	45	8	24	77	212	36	23.5	250
RFCM-080	M64 X 3	180	45	8	26	86	230	39	25.5	320
RFCM-090	M72 X 3	195	36	10	29	89	250	43	28.5	400
RFCM-100	M80 X 3	210	36	10	29	96	270	43	28.5	500

Mounting Accessories
(Continued...)

Clevis Bracket, Straight

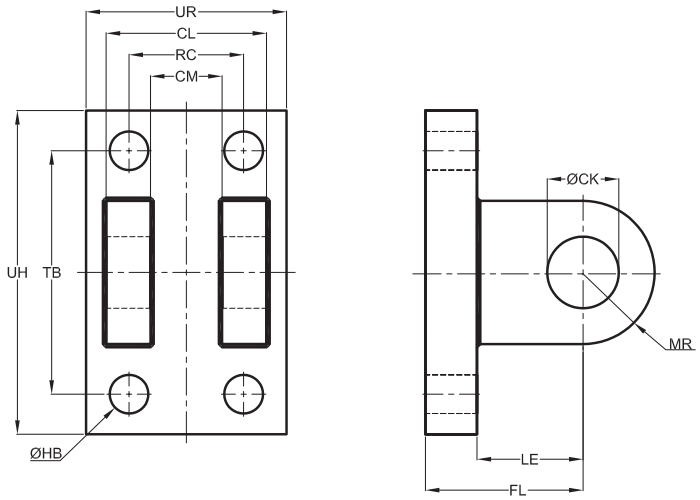

Part Number	CK H9	CL h16	CM A13	FL JS12	HB H13	LE min.	MR max.	RC JS14	TB JS14	UR max.	UH max.	Load Capacity (kN)
CBSM-025	25	56	25	55	13.5	37	25	40	85	70	113	32
CBSM-032	32	70	32	65	17.5	43	32	50	110	85	143	50
CBSM-040	40	90	40	76	22	52	40	65	130	108	170	80
CBSM-050	50	110	50	95	26	65	50	80	170	130	220	125
CBSM-063	63	140	63	112	33	75	63	100	210	160	270	200
CBSM-080	80	170	80	140	39	95	80	125	250	210	320	320
CBSM-090	90	190	90	160	45	108	90	140	290	230	370	400
CBSM-100	100	210	100	180	45	120	100	160	315	260	400	500
CBSM-110	110	240	110	200	52	138	110	180	350	290	445	635
CBSM-125	125	270	125	230	52	170	125	200	385	320	470	800

Trunion Bracket

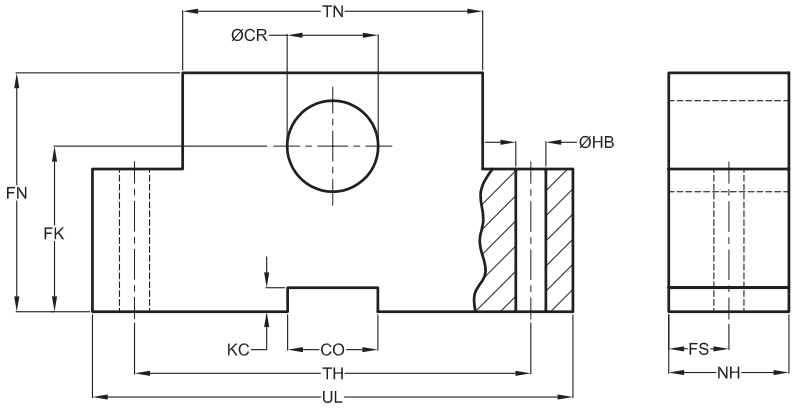

Part Number	CR H7	FK JS12	FN max.	HB H13	NH max.	TH js13	TN max.	UL max.	CO N9	KC	FS js13	Load Capacity (kN)
TBM-025	25	55	80	13.5	26	80	56	110	25	5.4	12	32
TBM-032	32	65	100	17.5	33	110	70	150	25	5.4	15	50
TBM-040	40	76	120	22	41	125	88	170	36	8.4	16	80
TBM-050	50	95	140	26	51	160	105	210	36	8.4	20	125
TBM-063	63	112	180	33	61	200	130	265	50	11.4	25	200
TBM-080	80	140	220	39	81	250	170	325	50	11.4	31	320
TBM-090	90	160	250	45	91	265	190	345	63	12.4	40	385
TBM-100	100	180	280	52	102	295	215	385	63	12.4	45	500
TBM-110	110	200	310	52	112	320	240	410	80	15.4	50	630
TBM-125	125	220	345	45	132	385	270	570	80	15.4	56	785

Mounting Accessories
(Continued...)

Clevis Bracket, In Angle

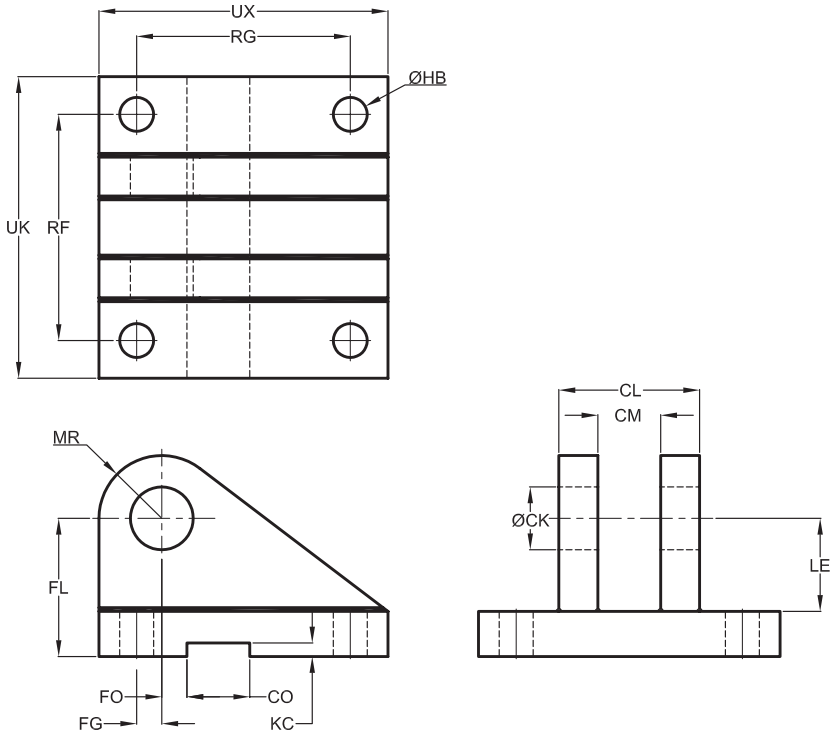

Part Number	CK H9	CL h16	CM A13	FL js13	HB H13	CO N9	LE min.	MR max.	RG js13	RF js13	UX max.	UK max.	FG JS14	KC	FO JS14	Load Capacity (kN)
CBAM-025	25	56	25	55	13.5	25	37	25	85	90	115	120	10	5.4	10	32
CBAM-032	32	70	32	65	17.5	25	43	32	110	110	145	145	14.5	5.4	6	50
CBAM-040	40	90	40	76	22	36	52	40	125	140	170	185	17.5	8.4	6	80
CBAM-050	50	110	50	95	26	36	65	50	150	165	200	215	25	8.4	0	125
CBAM-063	63	140	63	112	33	50	75	63	170	210	230	270	33	11.4	0	200
CBAM-080	80	170	80	140	39	50	95	80	210	250	280	320	45	11.4	0	320
CBAM-090	90	190	90	160	45	63	108	90	235	280	320	360	47.5	12.4	0	400
CBAM-100	100	210	100	180	52	63	120	100	250	315	345	405	52.5	12.4	0	500
CBAM-110	110	240	110	200	52	80	138	110	305	335	400	425	62.5	15.4	0	635
CBAM-125	125	270	125	230	52	80	170	125	350	365	450	455	75	15.4	0	800

Pivot Pin

Part Number	ML max.	EL H16	EK f8	Load Capacity (kN)
PPM-025	84	57	25	32
PPM-032	105	72	32	50
PPM-040	133	92	40	80
PPM-050	165	112	50	125
PPM-063	185	142	63	200
PPM-080	225	172	80	320

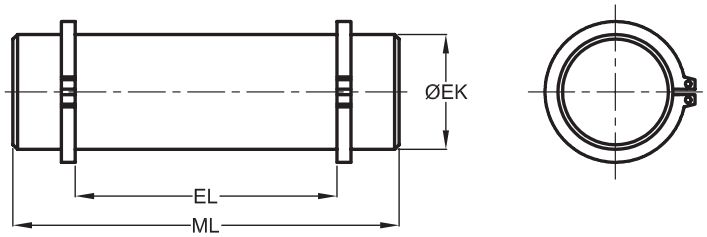

Mounting Accessories
(Continued...)

Spherical Rod Eye

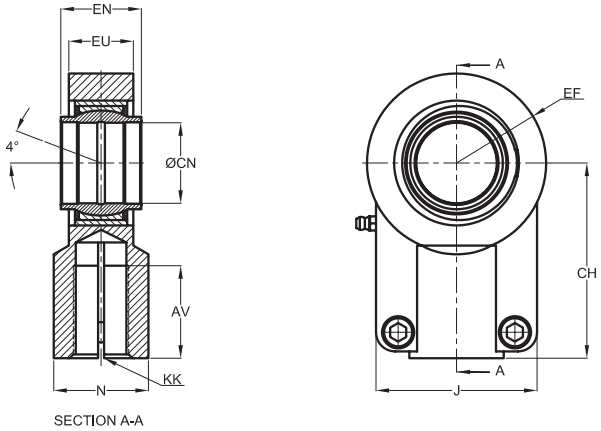

Part Number	CN H7	EN h12	EU max.	KK	AV min.	N max.	EF max.	CH js13	J max.	Load Capacity (kN)
6000747-025	25	25	22	M20 x 1.5	29	31	32	65	55	32
6000747-032	32	32	28	M27 x 2	37	38	40	80	67	50
6000747-040	40	40	34	M33 x 2	46	47	50	97	81	80
6000747-050	50	50	42	M42 x 2	57	58	63	120	97	125
6000747-063	63	63	53.5	M48 x 2	64	70	72.5	140	116	200
6000747-080	80	80	68	M64 x 3	86	91	92	180	150	320
6000747-090*	90	90	72	M72 x 3	91	100	92.5	195	160	400
6000747-100	100	100	85.5	M80 x 3	96	110	114	210	180	500
6000747-110*	110	110	88	M90 x 3	106	125	117.5	235	190	550
6000747-125	125	125	105	M100 x 3	113	135	160	260	202	800
6000747-160	160	160	133	M125 x 4	126	165	200	310	252	1250
6000747-200	200	200	165	M160 x 4	161	215	250	390	323	2000

* Not per ISO 8132 : 2006 (E)

Plain Rod Eye

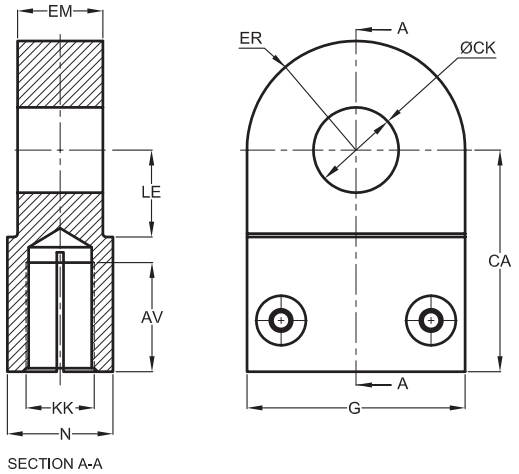

Part Number	KK 6H	CK H9	EM h12	ER max.	CA JS13	AV min.	N max.	LE	G max.	Load Capacity (kN)
PREM-025	M20 X 1.5	25	25	32	65	29	31	25.5	64	32
PREM-032	M27 X 2	32	32	40	80	37	38	30	80	50
PREM-040	M33 X 2	40	40	50	97	46	47	39	100	80
PREM-050	M42 X 2	50	50	63	120	57	58	47	126	125
PREM-063	M48 X 2	63	63	72.5	140	64	70	58	145	200
PREM-080	M64 X 3	80	80	92	180	86	91	74	184	320
PREM-100	M80 X 3	100	100	114	210	96	110	94	228	500
PREM-125	M100 X 3	125	125	160	260	113	135	116	320	800
PREM-160	M125 X 4	160	160	200	310	126	165	145	400	1250
PREM-200	M160 X 4	200	200	250	390	161	215	190	500	2000

Common Options

Sealing System Selection

Three different sealing systems are available in IM25 series, determine the correct seal code for your application, and then enter it in the model code.

Sealing system combination	Rod seal system code	Piston sealing system code	Temperature range °C	Max. Speed m/s	Application
N-Normal	Normal	Normal	-30 to 60	0.5	Normal, typical industrial
L-Low friction	Low friction	Low friction	-30 to 60	1.0	Low friction servo
T-High temperature*	High temperature	High temperature	-10 to 80	1.0	High temperature

Sealing System Details

Sealing system	Rod seal system	Piston sealing system	Fluid compatibility
N-Normal	Wiper (1) Double lip rod seal (Polyurethane) (1) O-ring (Nitrile) energized PTFE seal (1) Wearbands	Bi-directional O-ring (Nitrile) energized PTFE seal (1) Wearbands	Mineral Oil Mineral based fluid Petroleum based fluid Water in oil emulsion Water glycol (Max 40°C)
L-Low friction	Wiper (1) O-ring energized (Nitrile) PTFE seal (2) Wearbands	Bi-directional O-ring (Nitrile) energized PTFE seal (1) Wearbands	Mineral Oil Mineral based fluid Petroleum based fluid Water in oil emulsion Water glycol (Max 40°C)
T-High temperature*	Wiper (1) O-ring (Fluorocarbon) energized PTFE seal (2) Wearbands	Bi-directional O-ring (Fluorocarbon) energized PTFE seal (1) Wearbands	Mineral Oil Mineral based fluid Petroleum based fluid

***The high temperature seals function up to 200°C but the wear band strength reduces accordingly.**

Rod Seal Configuration

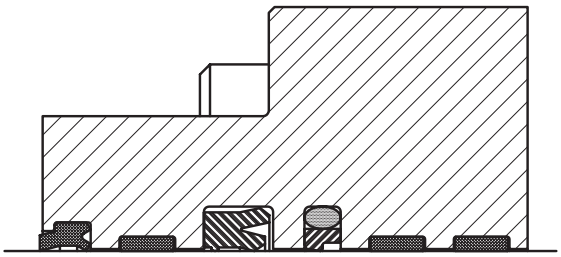

N Seal option

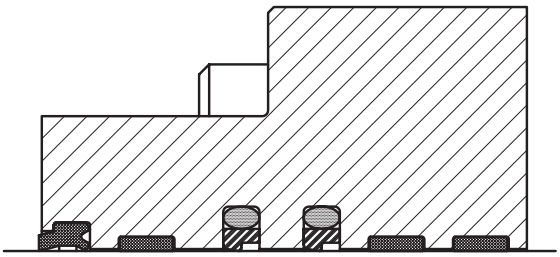

L & T Seal option

Piston Seal Configuration

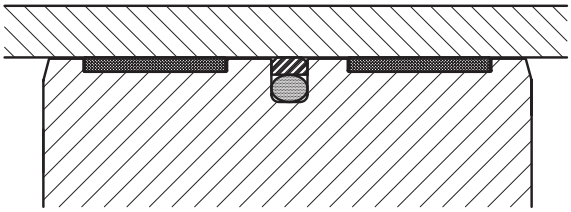

N, L and T Seal option

Common Options
(Continued...)

Sealkit Part Numbers

Single Rod Cylinders

Bore Dia.	Rod Dia.	Normal Seal Piston Sealkit	Option-N Rod Sealkit	Low Friction Piston Sealkit	Seal Option-L Rod Sealkit	High Temp. Piston Sealkit	Seal Option-T Rod Sealkit
40	25	6633N-MBC	6533N-MBCH	6633N-MBC	6533L-MBCH	6643T-MBC	6543T-MBCH
40	28	6633N-MBC	6533N-MBCJ	6633N-MBC	6533L-MBCJ	6643T-MBC	6543T-MBCJ
50	32	6633N-MBD	6533N-MBDK	6633N-MBD	6533L-MBDK	6643T-MBD	6543T-MBDK
50	36	6633N-MBD	6533N-MBDL	6633N-MBD	6533L-MBDL	6643T-MBD	6543T-MBDL
63	40	6633N-MBE	6533N-MBEM	6633N-MBE	6533L-MBEM	6643T-MBE	6543T-MBEM
63	45	6633N-MBE	6533N-MBEN	6633N-MBE	6533L-MBEN	6643T-MBE	6543T-MBEN
80	50	6633N-MBG	6533N-MBGP	6633N-MBG	6533L-MBGP	6643T-MBG	6543T-MBGP
80	56	6633N-MBG	6533N-MBGQ	6633N-MBG	6533L-MBGQ	6643T-MBG	6543T-MBGQ
100	63	6633N-MBH	6533N-MBHR	6633N-MBH	6533L-MBHR	6643T-MBH	6543T-MBHR
100	70	6633N-MBH	6533N-MBHS	6633N-MBH	6533L-MBHS	6643T-MBH	6543T-MBHS
125	80	6633N-MBK	6533N-MBKT	6633N-MBK	6533L-MBKT	6643T-MBK	6543T-MBKT
125	90	6633N-MBK	6533N-MBKU	6633N-MBK	6533L-MBKU	6643T-MBK	6543T-MBKU
140	90	6633N-MB1	6533N-MB1U	6633N-MB1	6533L-MB1U	6643T-MB1	6543T-MB1U
140	100	6633N-MB1	6533N-MB1V	6633N-MB1	6533L-MB1V	6643T-MB1	6543T-MB1V
160	100	6633N-MBL	6533N-MBLV	6633N-MBL	6533L-MBLV	6643T-MBL	6543T-MBLV
160	110	6633N-MBL	6533N-MBLW	6633N-MBL	6533L-MBLW	6643T-MBL	6543T-MBLW
180	110	6633N-MBM	6533N-MBMW	6633N-MBM	6533L-MBMW	6643T-MBM	6543T-MBMW
180	125	6633N-MBM	6533N-MBMY	6633N-MBM	6533L-MBMY	6643T-MBM	6543T-MBMY
200	125	6633N-MBN	6533N-MBNY	6633N-MBN	6533L-MBNY	6643T-MBN	6543T-MBNY
200	140	6633N-MBN	6533N-MBNZ	6633N-MBN	6533L-MBNZ	6643T-MBN	6543T-MBNZ
220	140	6633N-MB3	6533N-MB3Z	6633N-MB3	6533L-MB3Z	6643T-MB3	6543T-MB3Z
220	160	6633N-MB3	6533N-MB31	6633N-MB3	6533L-MB31	6643T-MB3	6543T-MB31
250	160	6633N-MBR	6533N-MBR1	6633N-MBR	6533L-MBR1	6643T-MBR	6543T-MBR1
250	180	6633N-MBR	6533N-MBR2	6633N-MBR	6533L-MBR2	6643T-MBR	6543T-MBR2
280	180	6633N-MB7	6533N-MB72	6633N-MB7	6533L-MB72	6643T-MB7	6543T-MB72
280	200	6633N-MB7	6533N-MB73	6633N-MB7	6533L-MB73	6643T-MB7	6543T-MB73
320	200	6633N-MBS	6533N-MBS3	6633N-MBS	6533L-MBS3	6643T-MBS	6543T-MBS3
320	220	6633N-MBS	6533N-MBS4	6633N-MBS	6533L-MBS4	6643T-MBS	6543T-MBS4

Double Rod Cylinders

For double rod cylinder two rod sealkits & one piston sealkit will be used,the sealkit numbers remains same.

Common Options
(Continued...)

Port Selection

SAE, BSPP, ISO Ports are available. Alternate posts are also listed below. Some mounting styles have location restrictions, refer to page 22.

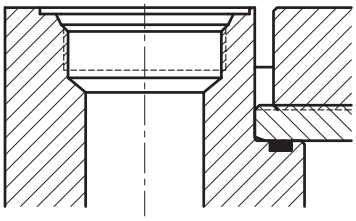

SAE J1926 UN O-ring Port Code 3 and 4

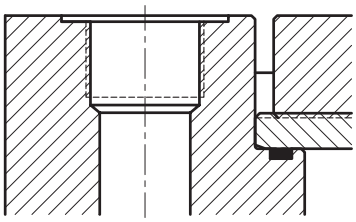

BSPP Port Code 7 and 8

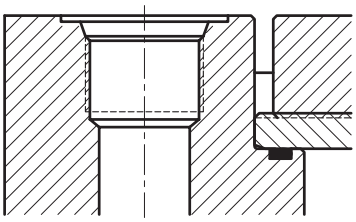

ISO 6149 Port Code A and B

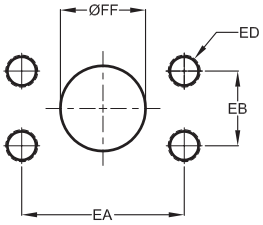

ISO 6162-1 and 6162-2 Rectangular Flange Port Code 6, F, E and G

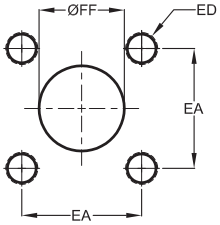

ISO 6164-1 and 6164-2 Square Flange Port Code H, N, L and P

ISO 6164-1 and ISO 6164-2 Dimensions
Max pressure for ISO 6164-1 : 25 Mpa (250 bar)
Max pressure for ISO 6164-2 : 40 Mpa (400 bar)

Flange Size, DN	EA	FF	ED
10	24.70	10.00	M6
13	29.70	15.00	M8
19	35.40	20.00	M8
25	43.80	25.00	M10
32	51.60	32.00	M12
38	60.10	38.00	M16
51	69.30	51.00	M16

ISO 6162-2 Dimensions
Max pressure for ISO 6162-2 : 40 Mpa (400 bar)

Flange Size, DN	EA	EB	FF	ED
13	40.50	18.20	12.70	M8
19	50.80	23.80	19.05	M10
25	57.20	27.80	25.40	M12
32	66.60	31.80	31.75	M14
38	79.30	36.50	38.00	M16
51	96.80	44.50	38.00	M20

ISO 6162-1 Dimensions

Flange Size, DN	Max Pressure (Mpa)	EA	GG	FF	ED
13	35	38.10	17.50	12.70	M8
19	35	47.60	22.30	19.10	M10
25	35	52.40	26.20	25.40	M10
32	25	58.70	30.20	31.80	M10
38	20	69.90	35.70	38.00	M12

Common Options
(Continued...)

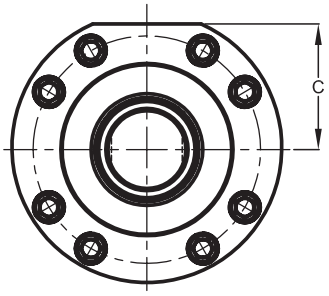

Standard Ports per ISO 6022:2006(E)

	7	3*	A	6		F		H and N*	
Bore	**BSPP**	**SAE J1926/ UN O-ring**	**ISO 6149-1 Metric port**	**ISO 6162-1 Rectangular Flange size**	**C**	**ISO 6162-2 Rectangular Flange size**	**C**	**ISO 6164-1 & 6164-2 Square Flange size**	**C**
40	G ½*	#10	M22X1.5*	-	-	-	-	10*	39
50	G ½	#10	M22X1.5	-	-	-	-	10	44
63	G ¾	#12	M27X2	13	53	-	-	13	55
80	G ¾	#12	M27X2	13	64	13	64	13	66
100	G1	#16	M33X2	19	77	13	79	19	80
125	G1	#16	M33X2	19	97	19	96	19	99
140	G 1 ¼	#20	M42X2	25	107	25	105	25	108
160	G 1 ¼	#20	M42X2	25	121	25	119	25	121
180	G 1 ¼	#20	M42X2	25	139	32	135	25	140
200	G 1 ¼	#20	M42X2	25	150	32	146	25	150
220	G 1 ½*	#24	M48X2*	32*	173	32*	171	32*	174
250	G 1 ½	#24	M48X2*	32	190	32	189	32	191
280	G 1 ½*	#24	M48X2*	32*	221	32*	219	32*	221
320	G 1 ½	#24	M48X2*	32	246	38*	243	32	247

***Note: Port size not per ISO 6022:2006(E)**

Oversize Ports

	8	4*	B	E**		G**		L** and P**	
Bore	**BSPP**	**SAE J1926/ UN O-ring**	**ISO 6149-1 Metric port**	**ISO 6162-1 Rectangular Flange size**	**C**	**ISO 6162-2 Rectangular Flange size**	**C**	**ISO 6164-1 & 6164-2 Square Flange size**	**C**
40	-	-	-	-	-	-	-	-	-
50	-	-	-	-	-	-	-	-	-
63	-	-	-	-	-	-	-	-	-
80	-	-	-	-	-	-	-	-	-
100	-	-	-	-	-	-	-	-	-
125	-	-	-	25	97	-	-	-	-
140	-	-	-	32	105	-	-	-	-
160	G 1 ½	#24	M48x2*	32	119	-	-	-	-
180	G 1 ½	#24	M48x2*	38	135	-	-	32	139
200	G 1 ½	#24	M48x2*	38	146	-	-	32	149
220	G2*	#32	M60x2*	38	171	38*	168	38*	172
250	G2*	#32	M60x2*	51	188	38*	186	38*	189
280	G2*	#32	M60x2*	51	219	38*	217	38*	220
320	G2*	#32	M60x2*	51	244	51*	240	51*	244

**** Note: Oversize flange ports are not available on cap side for RS Mounting (MF4)**

Common Options
(Continued...)

Port and Cushion Location

Port and cushion locations are identified by viewing the cylinder from the head end (or from the mounting end of double rod cylinder). The location numbers are shown to the right. Certain port and cushion locations cannot be specified with some mounting styles. The table below indicates which of the head and cap port and cushion location are available for IM25 Series all mounting style.

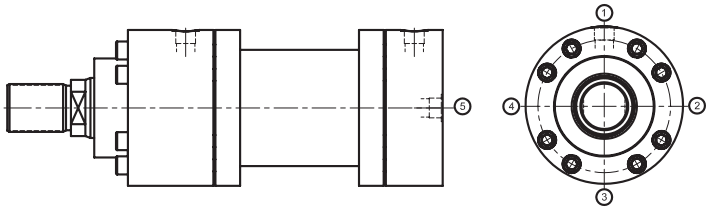

Port location availability chart

		Head location				Cap location				
Mounting Style Code	**Description**	**1**	**2**	**3**	**4**	**1**	**2**	**3**	**4**	**5**
AS	Side Lug (MS2)	A	A	**N**	A	A	A	**N**	A	A
FS	Head Circular Flange (MF3)	A	A	A	A	A	A	A	A	A
CM	Cap, Fixed Plain Eye (MP3)	A	A	A	A	A	A	A	A	**N**
CS	Cap, Fixed Eye With Spherical Bearing(MP3)	A	A	A	A	A	A	A	A	**N**
RS	Cap Circular Flange (MF4)	A	A	A	A	A	A	A	A	**N**
TT	Intermediate Trunnion (MT4)	A	A	A	A	A	A	A	A	A
AD	Double Rod Side Lug	A	A	**N**	A	-	-	-	-	-
FD	Double Rod, Head Circular Flange	A	A	A	A	-	-	-	-	-
TD	Double Rod Intermediate Trunnion	A	A	A	A	-	-	-	-	-

Cushion location availability chart

		Head location				Cap location			
Mounting Style Code	**Description**	**1**	**2**	**3**	**4**	**1**	**2**	**3**	**4**
AS	Side Lug (MS2)	A	A	**N**	A	A	A	**N**	A
FS	Head Circular Flange (MF3)	A	A	A	A	A	A	A	A
CM	Cap, Fixed Plain Eye (MP3)	A	A	A	A	A	A	A	A
CS	Cap, Fixed Eye With Spherical Bearing(MP3)	A	A	A	A	A	A	A	A
RS	Cap Circular Flange (MF4)	A	A	A	A	A	A	A	A
TT	Intermediate Trunnion (MT4)	A	A	A	A	A	A	A	A
AD	Double Rod Side Lug	A	A	**N**	A	-	-	-	-
FD	Double Rod, Head Circular Flange	A	A	A	A	-	-	-	-
TD	Double Rod Intermediate Trunnion	A	A	A	A	-	-	-	-

A-Available
N-Not available

Common Options
(Continued...)

Position Feedback System

Danfoss has been an industry pioneer incorporating positioning systems into industrial cylinder. Two types of feedback systems are available

- End of stroke indicators like proximity switches
- Absolute position indicators like linear transducers

Proximity Switch Option

Proximity switches for Series IM25 Cylinder are inductive type switches with a sensing probe that looks at the cushion collar or cushion spud to provide extend or retract indication. These switches are non contact type and are designed with probe inside the cylinder to protect against wear resistance and harsh external environments. Switch is also protected against short circuit and polarity reversal.

Switch details

Maximum Pressure	50 Mpa
Ambient temperature	-25°C to +80°C
Rated operational voltage	24 Vdc
Voltage drop static	<=1.5 Vdc
Rated operational current	200 mA
Degree of protection	IP68 per BWN Pr 20
Switching output	PNP
Switching element function	NO
Hysteresis	<15%
Ripple of power supply	15%
No load current	10mA
Supply voltage max	30 Vdc
Supply voltage min	10 Vdc
Voltage drop static	<=2 Vdc
Operating frequency	1000 Hz

Wiring diagram

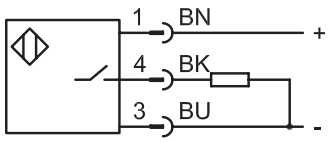

Pinout diagram

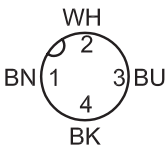

Switch envelope details

Bore (mm)	PH (mm) (Approx)	PC (mm) (Approx)
40	86	75
50	90	78
63	95	81
80	102	110
100	108	110
125	142	155
140	150	162
160	155	162
180	162	162
200	170	170
220	225	225
250	235	235
280	250	250
320	260	260

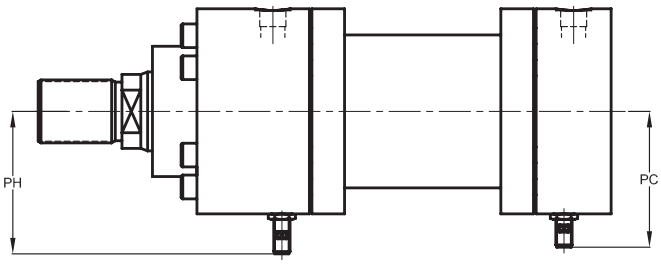

Common Options
(Continued...)

Linear Transducer Option

A complete line of precision cylinder position sensing and feedback devices are available. These packaged cylinder systems can handle virtually any application requiring feedback through out the cylinder stroke with or without velocity monitoring.

Series IM 25 Cylinder utilizes feedback technology based on magnetostriction principle. Danfoss can supply cylinder prepared for transducer or with transducer. Various cover options are also available to protect transducer from external harsh environment.

Transducer Details

Operating Principle	Magnetostrictive position sensing
Operating Pressure	250 Bar
Operating temperature (sensor electronics)	-40 to 75°C
Cable length	5m (15ft) standard *

Analogue Output option	
Input Voltage	+24 Vdc (20.4-28.8 Vdc) standard
Output (Voltage)	0-10 Vdc (standard) *
Output (current)	4-20mA (standard) *
Resolution	Infinite
Non-Linearity	± 0.02% or ± 0.05 mm (± 0.002 in.), whichever is greater
Repeatability	± 0.001% of full stroke or ± 0.0001 in. (± 0.0025 mm), whichever is greater.
Measuring Range (Sensor only)	50mm to 2540mm (2 to 100 in) *
Protection (sensor)	IP 67
Connection Type on sensor	6 pin male (see details)

Digital Output option	
Input Voltage	+24 Vdc Nominal (-15 or +20%)
Output	SSI
Resolution	5µm
Data length	24 Bit
Output format	Gray
Measuring direction	Forward
Non-Linearity	< ± 0.01% F.S. (minimum ± 40 µm)
Repeatability	< ± 0.001% F.S. (minimum ± 2.5 µm)
Hysteresis	< 4 µm typical 2 µm
Measuring Range (Sensor only)	50 - 7620 mm
Protection (sensor)	IP 67
Connection Type on sensor	7 pin male (see details)

*** For other options consult factory**

Common Options
(Continued...)

Transducer connector pin details

Standard transducer comes with 6/7 pin male connector (depending on output) with a 5m length cable with female connector connected to it.

6 Pin connector for Analogue output

Pin No.	Wire Color	Function Analog Output
1	Grey	0 to 10, -10 to +10 Vdc or 4 to 20 mA, 0 to 20 mA or reverse acting: 10 to 0, 10 to -10 Vdc or 20 to 4 mA, 20 to 0 mA
2	Pink	Return for pin 1
3	Yellow	Programming (RS-485+)
4	Green	Programming (RS-485-)
5	Red or Brown	Supply voltage (+Vdc)
6	White	DC Ground (for supply)

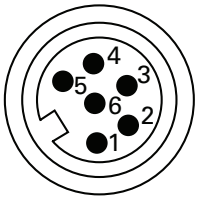

Integral D6 connector (male) as viewed from end of sensor

7 Pin connector for Digital output

Pin No.	Wire Color	Function Analog Output
1	Grey	Data(-)
2	Pink	Data(+)
3	Yellow	Clock(+)
4	Green	Clock(-)
5	Brown	+24 Vdc
6	White	0 V (GND)
7	n.c	

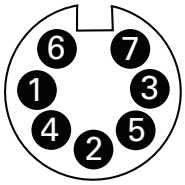

Male connector pin-out as viewed from the end of the sensor

Types of covers

Standard cover for transducer is aluminum casing for all mount except for MP5 & MP3 where the transducer is enclosed in body.

***Note: Transducer cover option not available for 50 & 63 Bore cylinders for MF4 mount**

Common Options
(Continued...)

Mounting dimensions for cylinders with transducer

Bore	XC	ZB	ZP	LC	LC1	DC
40	Not Available-Consult Factory					
50	470	244	265	167	-	64
63	512	274	298	167	-	64
80	560	305	332	167	140	64
100	610	340	371	167	136	64
125	690	395	430	167	132	64
140	750	430	465	167	132	64
160	786	465	505	167	127	64
180	855	505	550	167	122	64
200	926	550	596	167	121	64
220	1066	637	690	167	114	64
250	1080	650	703	167	114	64
280	1250	752	822	167	97	64
320	1258	760	830	167	97	64

MP3 & MP5

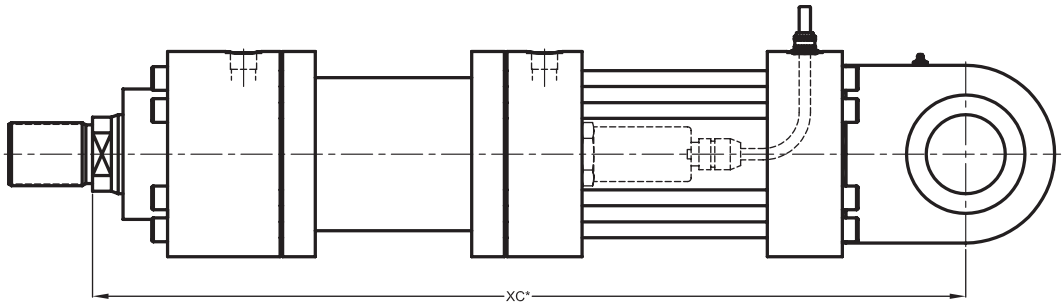

MT4

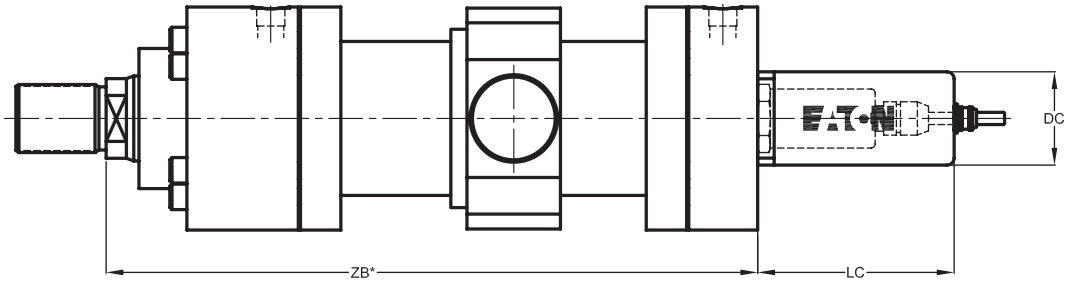

Common Options
(Continued...)

MF3

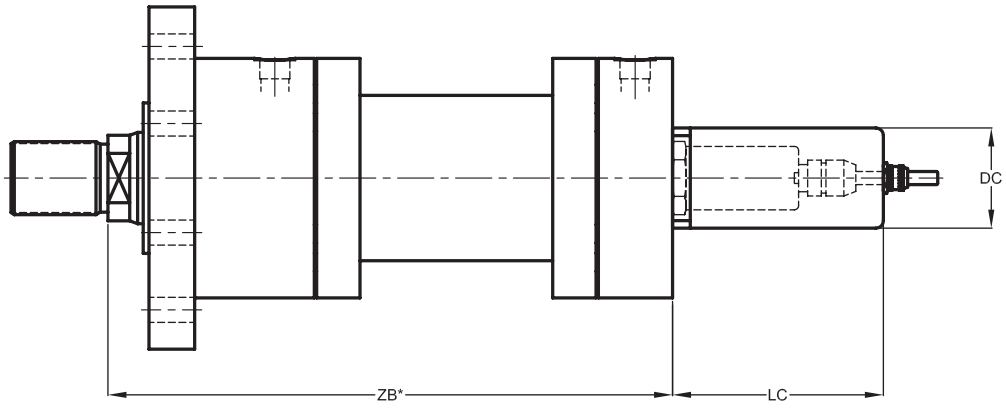

MF4

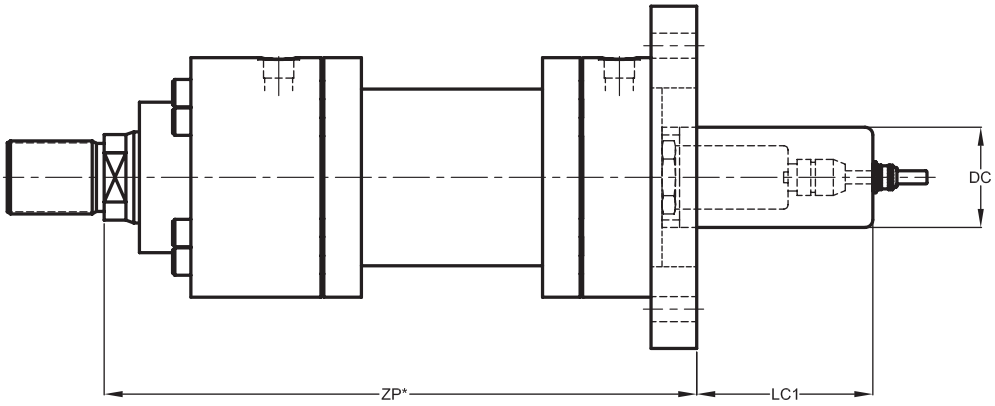

MS2

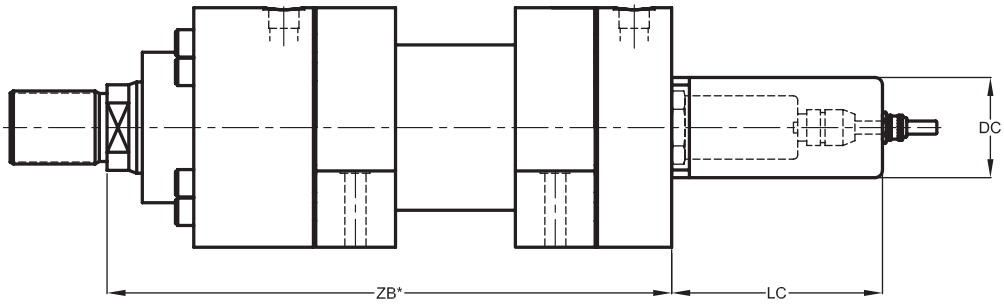

Common Options
(Continued...)

Other Options

Special Rod Ends

Modifications of standard rod ends or completely special rod end styles are available to meet unique rod end connection requirements.

Rod Boots

A rod boot surrounds the piston rod with an external, expandable cover to protect the rod surface from external contamination. This option requires additional rod length which is determined by the cylinder stroke.

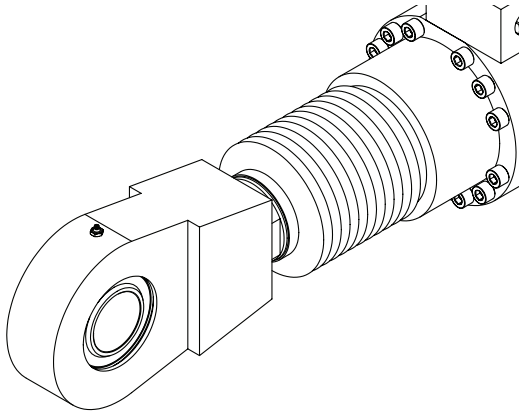

Test Coupling

Test couplings are available as option which can be used for air bleeding and pressure measurement.

Usually cylinders will bleed themselves of air when ports are vertical, on top. Bleed ports are often desirable to remove entrapped air, when the ports are on the bottom. High performance and high speed or heavy load applications are a few examples where air bleeds desirable.

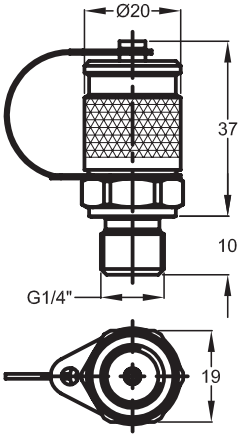

Gland Drain

Gland drains are primarily used for long stroke cylinders (over 800mm) and when extended speed exceeds retract speed. The gland drain is used to return any accumulated fluid, between the rod seal and wiper to tank. This is used in servo applications, for ultralow leakage requirements, or for remote visual monitoring seal leakage for preventive maintenance purposes.

Special Coating and painting

Cylinders can be prepared with a primer coat, epoxy, lacquer or enamel paint finish coatings to customer specifications. Synergistic, Nitro carburizing and other material treatments are also available for special applications.

Extra Heavy Chrome Tubes and Rods

Added wear and corrosion resistance are available by specifying Extra Heavy Chrome (.05 to .07 mm thick).

Special Cylinders

For special cylinder out of this catalog range, Danfoss' engineering and design team is ready to produce special designs to meet customer's requirements. Contact your Danfoss sales representative for any special requirements like special mounting, special seals, special bore diameter, special piston rod diameter, special pressure requirements etc., use the application data sheet to help us design cylinder to match your application.

Application/Engineering Data

Mounting Types and Application Guide

AS: Side Lug (MS2)

Side Lug Mounting styles are for moving loads along a flat guided surface, as in a carriage along rails. The mounting surface should be flat and parallel to the center line of the piston rod. The load should be guided to traverse along the center line of the piston rod. With unsupported loads, the bearing must absorb more force. For these applications, the larger alternate rod is recommended and stop tubes should be considered.

The frame on which the cylinder is mounted must be sufficiently rigid to resist the bending moments. Use high tensile socket head cap screws or hex head bolts tightened to the manufacturers recommended torque. The mounting bolts should not be subjected to shear load, use of keys is recommended.

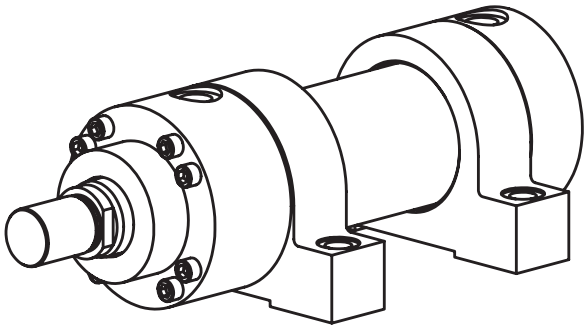

CM: Cap Fixed Plain Eye (MP3)

This mounting style is for applications in which the machine member travels in a curved path within one plane. This mount can be used both in compression (push) and tension (pull). The centerline of the machine member that attaches to the swivel pin must be perpendicular to the centerline of the piston rod and the curved path must be in one plane only. Any misalignment will cause excess side loading on bearings and lead to premature failure.

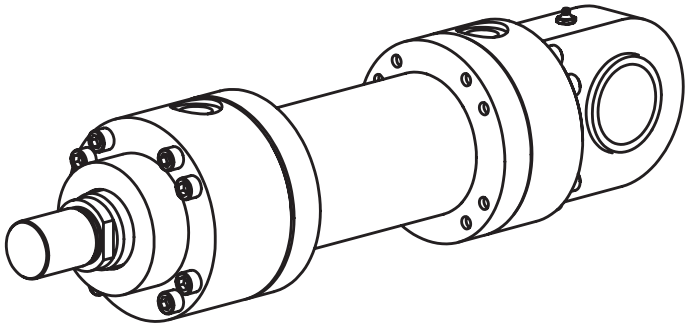

CS: Cap Fixed Eye with Spherical Bearing (MP5)

This mounting style is for applications in which the machine member travels in a curved path in one plane where some misalignment is unavoidable. This mount can be used both in compression (push) and tension (pull). Refer to the allowable tilt angle in the dimension section of this mounting.

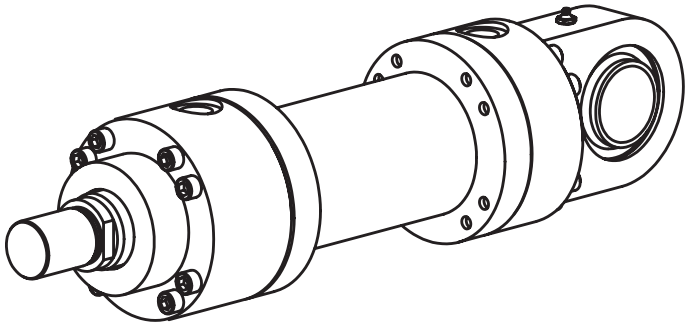

FS: Head Circular Flange (MF3)

This mounting style is ideal for straight line force transfer applications in which the cylinder is used in tension (pulling). The mounting surface should be flat, and the rod end should be piloted into it. The force of the load should be perpendicular to the piston rod. The frame on which the cylinder is mounted must be sufficiently rigid to resist bending moments. Use high tensile socket head cap screws or hex head bolts tightened to the manufacturers recommended torque.

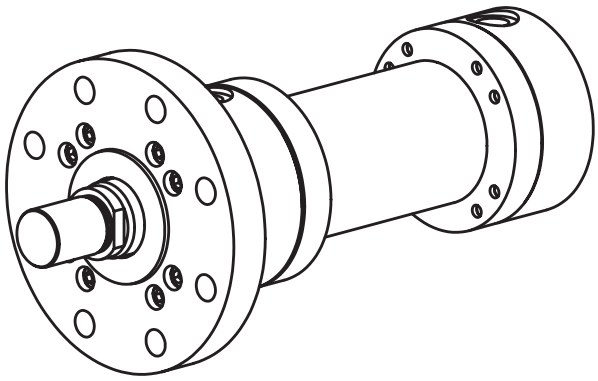

RS: Cap Circular Flange (MF4)

These mounting style is ideal for straight line force transfer applications in which the cylinder is used in compression (pushing). The mounting surface should be flat, and the flange should be piloted into it. The force of the load should be perpendicular to the piston rod. The frame on which the cylinder is mounted must be sufficiently rigid to resist bending moments. Use high tensile socket head cap screws or hex head bolts tightened to the manufacturers recommended torque.

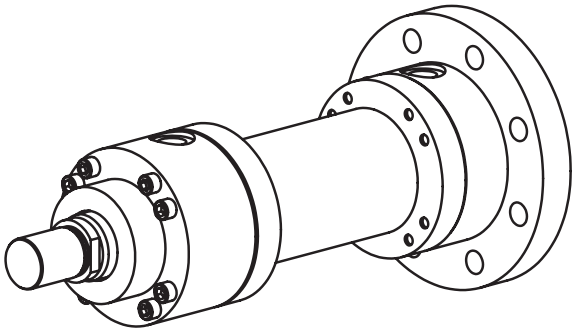

TT: Intermediate Trunnion (MT4)

The Intermediate Trunnion Mounting style is for longer stroke applications in which the machine member travels in a curved path in one plane. On special orders the trunnion can be located anywhere along the body. This mounting can be used both in compression (push) and tension (pull) applications. It is recommended that rigidly mounted trunnion mount blocks with bearings at least as long as the trunnion pins be used and be installed close to the shoulder of the trunnion.

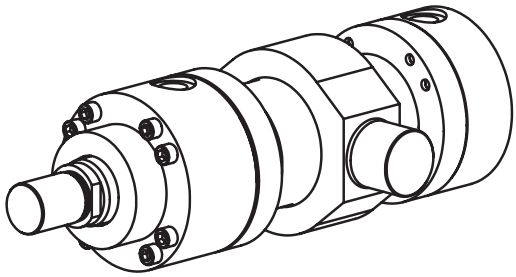

AD, FD and TD: Double rod Side Lug, Head Circular & Trunnion

Double end cylinders are specified when equal displacement is desired on both sides of the piston or when the application is such that another function can be performed simultaneously with a second rod. The single rod mount application data is applicable for all double head cylinders.

Note: For pushing applications always check for buckling, refer to page 33 for detail

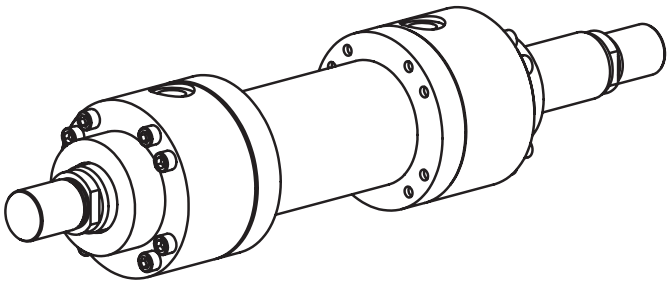

Force and Area of Cylinder

To choose the proper size of cylinder for your application, first determine the maximum push and/or pull force required to do the job. Then use the table below to select the cylinder that will provide that force. Remember that force capabilities derived from charts and formulas may be theoretically correct, but other factors must be considered. Be sure to allow for pressure drop between the pump outlet and the cylinder port. Also, some of a cylinder's force is used up overcoming seal friction and, to a lesser extent, the inertia of the piston itself. In Vickers by Danfoss cylinders, the amount of extra force needed to compensate for these fac-tors has been limited to 5% or less of the cylinder's theoretical power without sacrificing sealing performance. For maximum reliability and fatigue life of the piston rod, the largest rod offered in a given bore size should be specified. The smaller rods for a given bore are primarily intended for short stroke push loading or reduced pressure applications.

Bore	Rod	Piston Area A_B	Rod Area A_R	Annulus Area A_A	Push Force at 25 Mpa	Diff. Force at 25 Mpa	Pull Force at 25 Mpa	Flow at 0.1 m/s Out	Diff.	In
mm	mm	mm²	mm²	mm²	kN	kN	kN	L/min	L/min	L/min
40	25	1256	490	765	31.42	12.27	19.14	7.54	2.95	4.59
40	28	1256	615	640	31.42	15.39	16.02	7.54	3.69	3.85
50	32	1963	804	1159	49.09	20.11	28.98	11.78	4.83	6.96
50	36	1963	1017	945	49.09	25.45	23.64	11.78	6.11	5.67
63	40	3117	1256	1860	77.93	31.42	46.52	18.70	7.54	11.16
63	45	3117	1590	1526	77.93	39.76	38.17	18.70	9.54	9.16
80	50	5026	1963	3063	125.66	49.09	76.58	30.16	11.78	18.38
80	56	5026	2463	2563	125.66	61.58	64.09	30.16	14.78	15.38
100	63	7853	3117	4736	196.35	77.93	118.42	47.12	18.70	28.42
100	70	7853	3848	4005	196.35	96.21	100.14	47.12	23.09	24.03
125	80	12271	5026	7245	306.80	125.66	181.13	73.63	30.16	43.47
125	90	12271	6361	5910	306.80	159.04	147.75	73.63	38.17	35.46
140	90	15393	6361	9032	384.85	159.04	225.80	92.36	38.17	54.19
140	100	15393	7853	7539	384.85	196.35	188.50	92.36	47.12	45.24
160	100	20106	7853	12252	502.65	196.35	306.31	120.64	47.12	73.51
160	110	20106	9503	10602	502.65	237.58	265.07	120.64	57.02	63.62
180	110	25446	9503	15943	636.17	237.58	398.59	152.68	57.02	95.66
180	125	25446	12271	13175	636.17	306.80	329.38	152.68	73.63	79.05
200	125	31415	12271	19144	785.40	306.80	478.60	188.50	73.63	114.86
200	140	31415	15393	16022	785.40	384.85	400.55	188.50	92.36	96.13
220	140	38013	15393	22619	950.33	384.85	565.49	228.08	92.36	135.72
220	160	38013	20106	17907	950.33	502.65	447.68	228.08	120.64	107.44
250	160	49087	20106	28981	1227.18	502.65	724.53	294.52	120.64	173.89
250	180	49087	25446	23640	1227.18	636.17	591.01	294.52	152.68	141.84
280	180	61575	25446	36128	1539.38	636.17	903.21	369.45	152.68	216.77
280	200	61575	31415	30159	1539.38	785.40	753.98	369.45	188.50	180.96
320	200	80424	31415	49008	2010.62	785.40	1225.22	482.55	188.50	294.05
320	220	80424	38013	42411	2010.62	950.33	1060.29	482.55	228.08	254.47

Tolerance Chart

Tolerance on mounting dimensions as per ISO 6022 : 2006

Mounting style	MP3	MP5	MS2	MT4	MF4	MF3	All Mount**
Mounting dimensions	XC*	XO*	XS*	XV	ZP*	WC	WF
Stroke length (mm)	**Tolerance (mm)**						
≤1250	± 1.5	± 1.5	± 2	± 2	± 1.5	± 2	± 2
> 1250 ≤ 3150	± 3	± 3	± 4	± 4	± 3	± 4	± 4
> 3150 ≤ 8000	± 5	± 5	± 8	± 8	± 5	± 8	± 8

*** Length including stroke**
**** Not applicable to MF3 mount**

Tolerance on piston stroke

Normal stroke (mm)	Tolerance (mm)
≤1250	2 0
> 1250 ≤ 3150	5 0
> 3150 ≤ 8000	8 0

Buckling Chart

In push applications a cylinder acts as a loaded column. There are three basic ways to mount the cylinders as shown which changes the end condition C to 2, 1 or 0.25. Select your mounting style and locate the column which is closed to but not below your applications operating pressure. The intersection of operating pressure and bore/rod size represents the maximum allowable length (including stroke, rod accessories and extra rod projection) in push stroke. This maximum length is based on column loading and does not consider side loading, stop tube requirement or other cylinder stroke limiters. For pressure above 250 bar (25 Mpa) consult factory

Maximum allowable length L (mm) at working pressure

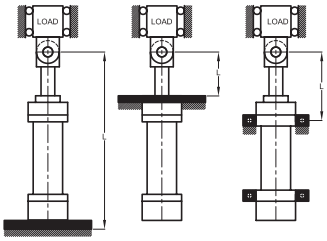

End condition C = 2

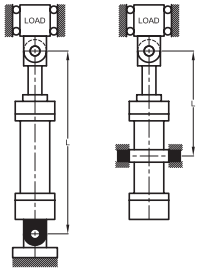

End condition C = 1

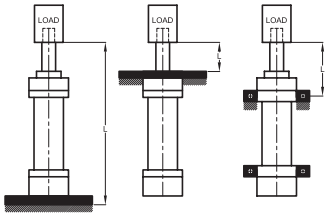

End condition C = .25

		Mounts: AS, FS & RS					Mounts: CM, CS & TT					Mounts: AS, FS & RS				
Bore mm	**Rod mm**	**250 bar**	**200 bar**	**150 bar**	**100 bar**	**50 bar**	**250 bar**	**200 bar**	**150 bar**	**100 bar**	**50 bar**	**250 bar**	**200 bar**	**150 bar**	**100 bar**	**50 bar**
40	25	756	932	1089	1334	1887	534	659	770	944	1334	267	330	385	472	667
40	28	1046	1184	1367	1674	2367	740	837	966	1184	1674	370	418	483	592	837
50	32	1024	1230	1428	1749	2473	724	870	1010	1237	1749	362	435	505	618	874
50	36	1394	1565	1807	2214	3130	986	1107	1278	1565	2214	493	553	639	783	1107
63	40	1257	1523	1771	2169	3067	889	1077	1252	1534	2169	444	538	626	767	1084
63	45	1726	1941	2241	2745	3882	1221	1372	1585	1941	2745	610	686	792	970	1372
80	50	1512	1864	2179	2669	3774	1069	1318	1541	1887	2669	534	659	770	944	1334
80	56	2093	2367	2733	3348	4734	1480	1674	1933	2367	3348	740	837	966	1184	1674
100	63	1944	2374	2767	3389	4793	1374	1679	1957	2397	3389	687	839	978	1198	1695
100	70	2616	2959	3417	4184	5918	1850	2092	2416	2959	4184	925	1046	1208	1479	2092
125	80	2560	3076	3570	4372	6183	1810	2175	2524	3092	4372	905	1087	1262	1546	2186
125	90	3486	3913	4518	5534	7826	2465	2767	3195	3913	5534	1233	1383	1597	1956	2767
140	90	2909	3479	4034	4941	6987	2057	2460	2853	3494	4941	1028	1230	1426	1747	2470
140	100	3836	4313	4981	6100	8626	2713	3050	3522	4313	6100	1356	1525	1761	2157	3050
160	100	3023	3728	4358	5337	7548	2138	2636	3082	3774	5337	1069	1318	1541	1887	2669
160	110	4007	4567	5273	6458	9133	2833	3229	3729	4567	6458	1417	1615	1864	2283	3229
180	110	3120	3970	4687	5741	8118	2206	2807	3314	4059	5741	1103	1403	1657	2030	2870
180	125	4620	5242	6053	7413	10484	3267	3707	4280	5242	7413	1633	1853	2140	2621	3707
200	125	3779	4660	5447	6672	9435	2672	3295	3852	4718	6672	1336	1648	1926	2359	3336
200	140	5232	5918	6833	8369	11836	3699	4184	4832	5918	8369	1850	2092	2416	2959	4184
220	140	4423	5344	6212	7608	10760	3128	3779	4393	5380	7608	1564	1889	2196	2690	3804
220	160	6222	7027	8114	9937	14053	4400	4969	5737	7027	9937	2200	2484	2869	3513	4969
250	160	4873	6084	7140	8745	12367	3446	4302	5049	6183	8745	1723	2151	2524	3092	4372
250	180	6905	7826	9037	11068	15652	4883	5534	6390	7826	11068	2441	2767	3195	3913	5534
280	180	5550	6888	8068	9882	13975	3924	4871	5705	6987	9882	1962	2435	2853	3494	4941
280	200	7586	8626	9961	12200	17253	5364	6100	7044	8626	12200	2682	3050	3522	4313	6100
320	200	5663	7336	8716	10675	15096	4004	5187	6163	7548	10675	2002	2594	3082	3774	5337
320	220	7851	9131	10546	12916	18267	5551	6457	7457	9133	12916	2776	3228	3729	4567	6458

The maximum allowable lengths are calculated using below formulae

1. Calculation per Euler

$$P = \frac{C\pi^2 EI}{FL^2} \quad if \quad \frac{L}{k} > \sqrt{\frac{2C\pi^2 E}{Sy}}$$

2. Calculation per JB Johnson

$$P = \frac{ASy}{F}\left[1 - \frac{SyL^2}{4C\pi^2 Ek^2}\right] \quad if \quad \frac{L}{k} \le \sqrt{\frac{2C\pi^2 E}{Sy}}$$

F	Safety factor, 3.5
P	Critical load, N
E	Modulus of elasticity, 2.1x105 Mpa
L	Length, mm
I	Moment of inertia, mm4
C	End condition, refer respective mounting
A	Rod area, mm2
k	Radius of gyration, mm
Sy	Yield strength of material, Mpa

Cushioning System

Cylinder cushions are designed to decelerate the piston velocity near the end of each cylinder stroke to prevent excessive mechanical shock. Danfoss' advanced cushions permit higher cylinder speed, shorter cycle time and more work per hour

Cushions are recommended when the piston makes full stroke and any of the below condition

- Piston speed exceeds 0.13m/s
- Lower speeds with high masses connected to rod

IM25 series hydraulic cylinders are available with optional cushions at head and cap. Head end cushion is accomplished by a self centering collar and the cap end cushion by a spud which is integral part of the piston rod.

Cushion collar contacts the cushion bore in head to create a seal and trap the fluid, similarly Cushion spud contacts floating sleeve at cap end and the sleeve seats against the cap to create seal and trap the fluid.

Cushion Features

- Check valve at head and floating sleeve at cap provides rapid acceleration out of the cushion.
- The floating design of collar and sleeve self aligns to minimize wear.
- Cushion adjustment screws are provided to tune cushion per formance within limits

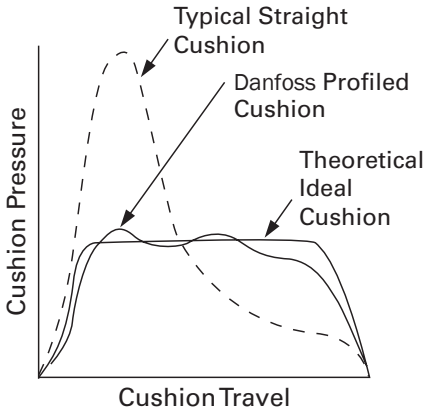

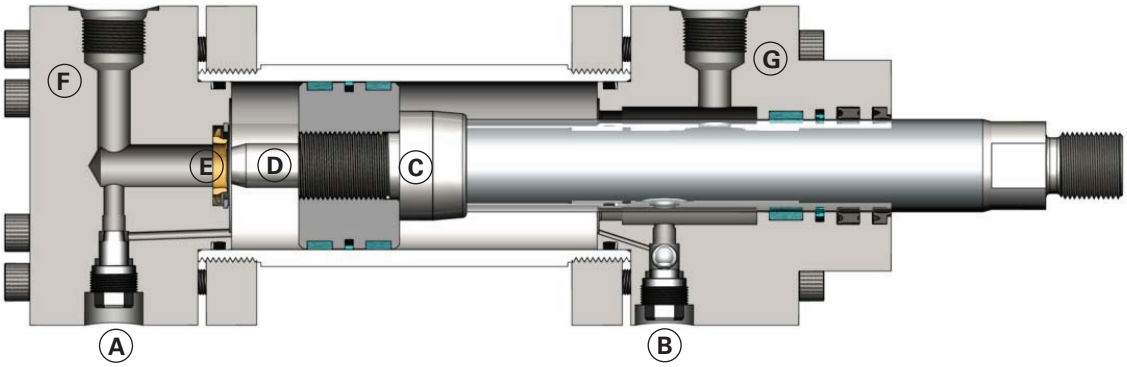

A - Cushion adjustment screw
B - Check valve
C - Cushion collar
D - Cushion spud
E - Cushion sleeve
F - Cap
G - Head

Key assumptions and limitations

These assumptions provide parameters for determining maximum cushion performance. Actual performance may be different than determined by these methods, particularly if assumptions are not maintained.

Efficiency factors are applied to the energy calculations that attempt to reflect characteristics of Danfoss' cushion design.

The following assumptions should be considered when calculating cushion capacity:

- Maximum cushion pressure is 375 bar
- The upper limit of velocity is 0.5 m/s
- If velocity is below 0.13 m/s, the cushions become ineffective on cylinders smaller than 80 mm bore
- Friction force is assumed to be zero
- The cylinder is used in a linear system (not for rotary applications)
- Fluid viscosity is equivalent to 25 centistokes
- The driving pressure is equal to the maximum system pressure, usually the relief valve setting
- Cushion adjustment screws are provided to tune cushion performance within limits
- Cushion efficiency (Ceff) is 0.67 for velocities between 0.1 and 0.3 m/s., or 0.5 for velocities between 0.3 and 0.5 m/s

If the energy absorption is more than the values indicated in the cushion curves then it should be absorbed by external means such as shock absorbers or springs.

Application 1

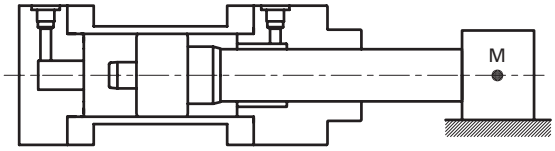

Extend or Retract

$E = (1/Ceff)\ [0.5\ M\ V^2]$

Application 2

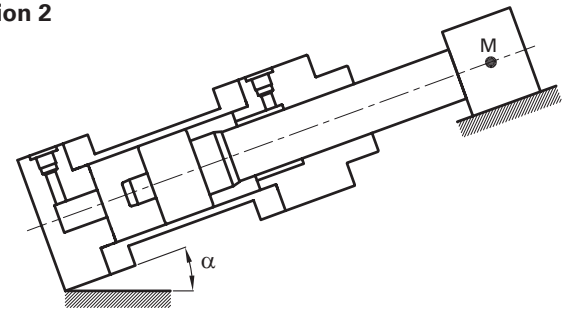

Extend

$E = (1/Ceff)\ \{[0.5\ M\ V^2] - [9.81\ M\ (L_{hc}/1000 \sin(\alpha)]\}$

Retract

$E = (1/Ceff)\ \{[0.5\ M\ V^2] + [9.81\ M\ (L_{cc}/1000 \sin(\alpha)]\}$

Application 3

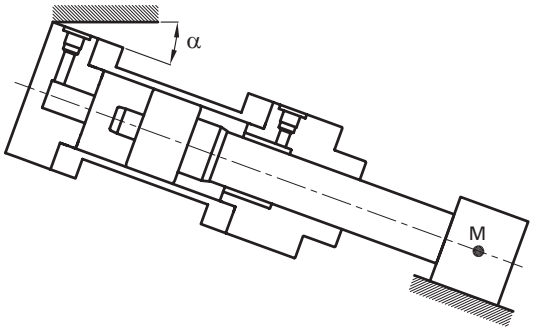

Extend

$E = (1/Ceff)\ \{[0.5\ M\ V^2] + [9.81\ M\ (L_{hc}/1000 \sin(\alpha)]\}$

Retract

$E = (1/Ceff)\ \{[0.5\ M\ V^2] - [9.81\ M\ (L_{cc}/1000 \sin(\alpha)]\}$

Units

E	Energy	Joule
M	Mass	Kg
V	Velocity	m/s
Pd	Driving pressure	Bar
Lhc	Head cushion length	Mm
Lcc	Cap cushion length	Mm
g	Gravity constant	9.81/1000

Steps to find the cushioning capacity

- Calculate the Energy per the applicable formulae (Application 1, 2 or 3)
- Select the applicable Cushion Chart
- Plot a point with Energy on Y axis and Driving pressure along X axis
- Plotted point should be below the cushion curve for select bore & rod combination

Example 1

IM25 cylinder in application 3 and extending:

Using a IM25 cylinder with a 100 mm bore, 63 mm rod is mounted at a 45° angle from horizontal with rod down. A 1300 kg mass is attached to the rod and system pressure is 100 bar. The cylinder is moving the mass at 0,3 m/s.

Using the calculation for application 3:

$E = (1/Ceff) \{[0.5\ M\ V^2] + [9.81\ M\ (L_{hc}/1000 \sin(\alpha)]\}$

$E = (1/0.67)\{[0.5 * 1300 * 0.3^2] + [9.81 * 1300 * (55/1000) *\sin(45)]\}$

E = 828 Nm (joule)

Pick the chart (see page 38) for IM25 cylinder, rod extending. The curve is for the 100 bore.

Enter the vertical axis at 828 Nm and the horizontal axis at 10 Mpa (100 bar). The point of intersection is below the 100 curve so the cushion is acceptable. The maximum allowable pressure on the cap end is 164 bar which is greater than the specified system pressure of100 bar.

Example 2

IM25 cylinder in application 2 and retracting:

Using an IM25 cylinder with a 100 mm bore; 63 mm rod is mounted at a 45° angle from horizontal with rod up. A 1300 kg mass is attached to the rod and system pressure is 250 bar. The cylinder is moving the mass at 0.3 m/s.

Using the calculation for application 2:

$E = (1/Ceff) \{[0.5\ M\ V^2] + [9.81\ M\ (L_{cc}/1000 \sin(\alpha)]\}$

$E = (1/0.67)\{[0.5 * 1300 * 0.3^2] + [9.81 * 1300 * (34/1000) *\sin(45)]\}$

E = 545 Nm (joule)

Pick the chart (see page 37) for IM25 cylinder, rod 1 retracting. The curve is for the 100 bore 63 rod. Enter the vertical axis at 545 Nm and the horizontal axis at 25 Mpa (250 bar). The point of intersection is below the 100-63 curve so the cushion is acceptable.

Cushion Data

Bore (mm)	Rod (mm)	L_{hc} Effective Head End Cushion Length (mm)	L_{cc} Effective Cap End Cushion Length (mm)	Max. Cap Pressure (bar)
40	25	30	32	150
40	28	30	32	150
50	32	35	30	159
50	36	35	30	159
63	40	40	30	148
63	45	40	30	148
80	50	45	34	164
80	56	45	34	164
100	63	55	34	164
100	70	55	34	164
125	80	60	34	163
125	90	60	34	163
140	90	60	40	144
140	100	60	40	144
160	100	60	40	164
160	110	60	40	164
180	110	65	53	164
180	125	65	53	164
200	125	65	53	164
200	140	65	53	164
220	140	65	53	151
220	160	65	53	151
250	160	90	53	158
250	180	90	53	158
280	180	90	53	144
280	200	90	53	144
320	200	100	53	164
320	220	100	53	164

Cushion Curves

Cushion energy absorbing potential (Rod 1 retracting)

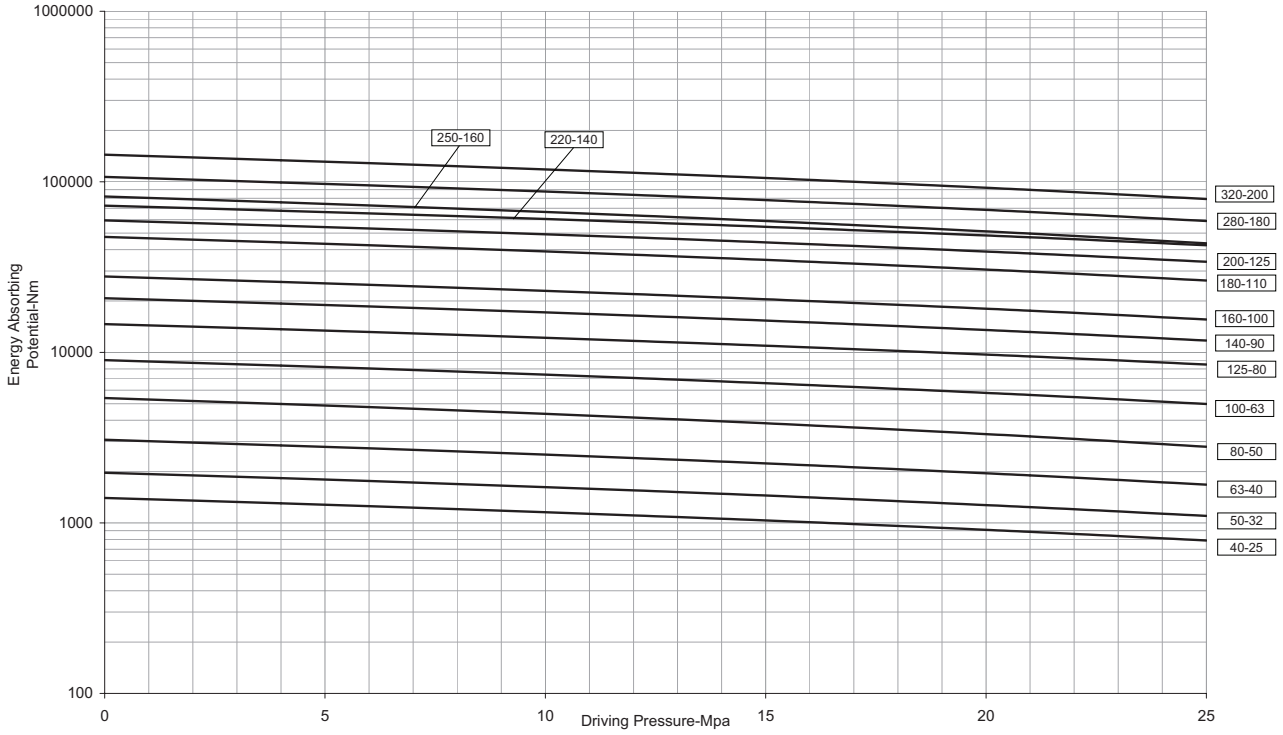

Cushion energy absorbing potential (Rod 2 retracting)

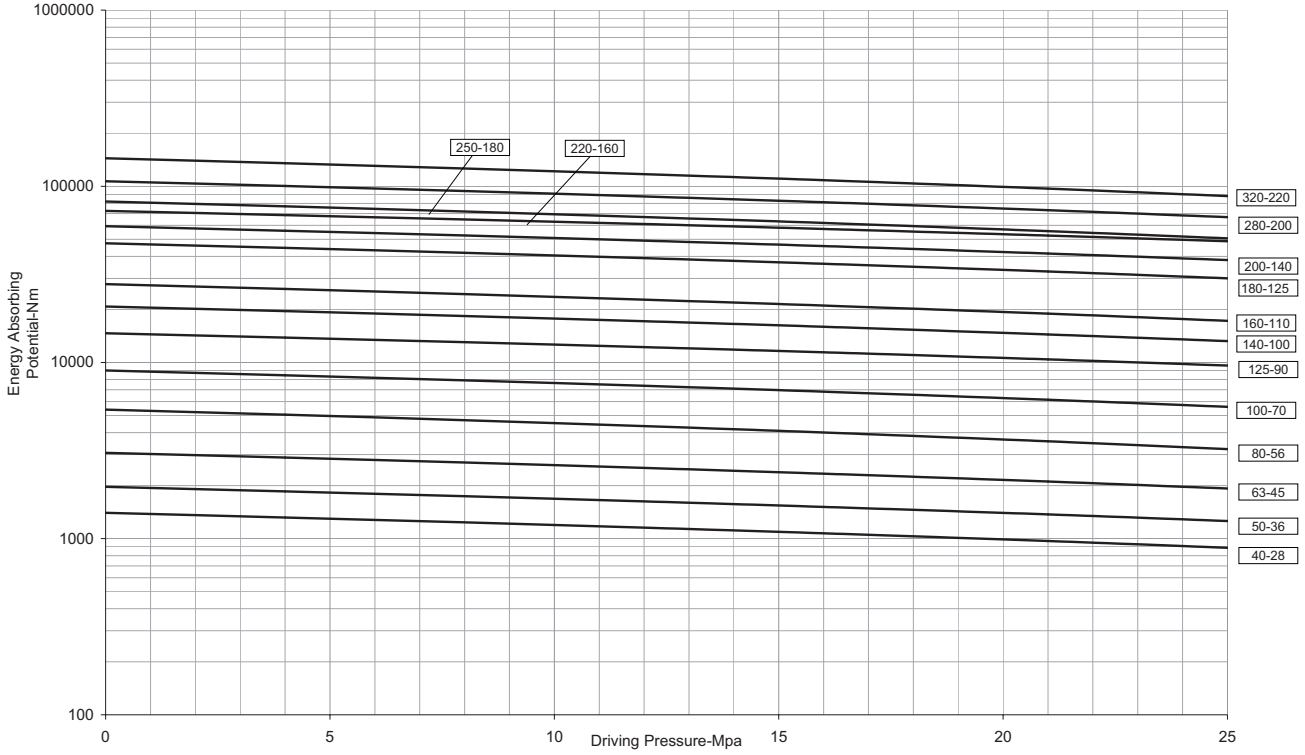

Cushion energy absorbing potential (Rod Extending)

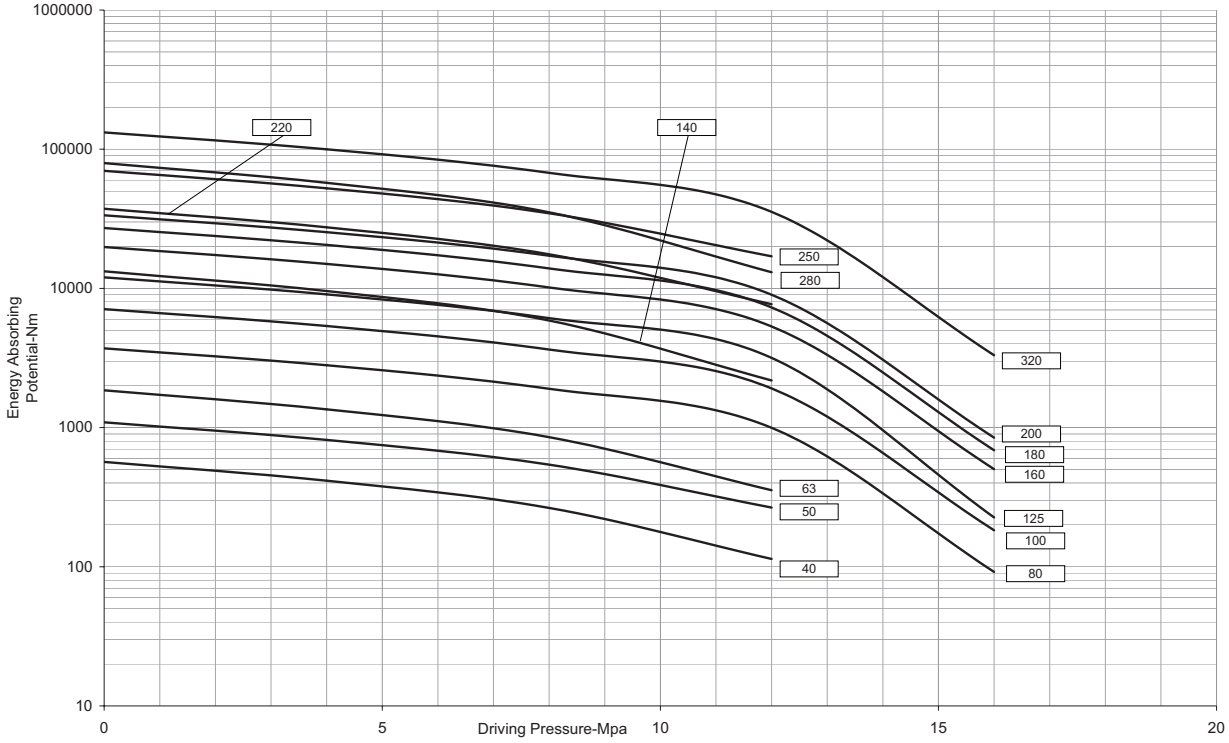

Manifolds and Valves

Danfoss can supply cylinders integrated with Integrated Hydraulics cartridge valves and manifolds.

Part Balanced Over centre Valves: Designed to be used in conjunction with closed centre directional valves. This type of over centre remains open as a relief valve when there is back pressure on the valve port.

- Emergency Lowering: By using a two-positioned, two ported solenoid valve mounted in or onto the cylinder, a bypass for the load holding valve is achieved.
- Line Mounted Valves: Hose failure can result in dangerous load conditions, so line mounted over centre or pilot operated check are not recommended.
- Gasket Mounted Valves: Valves mounted onto a gasket face with an 'O' ring seal between the faces.
- Banjo Mounted Valves: For use with standard cylinders where the only available mounting is the threaded port.
- Cylinder Mounted Valves: The best option is to mount the cartridge into the cylinder end, reducing pipe work and removing gasket seals.

Typical application with valves installed on cylinder

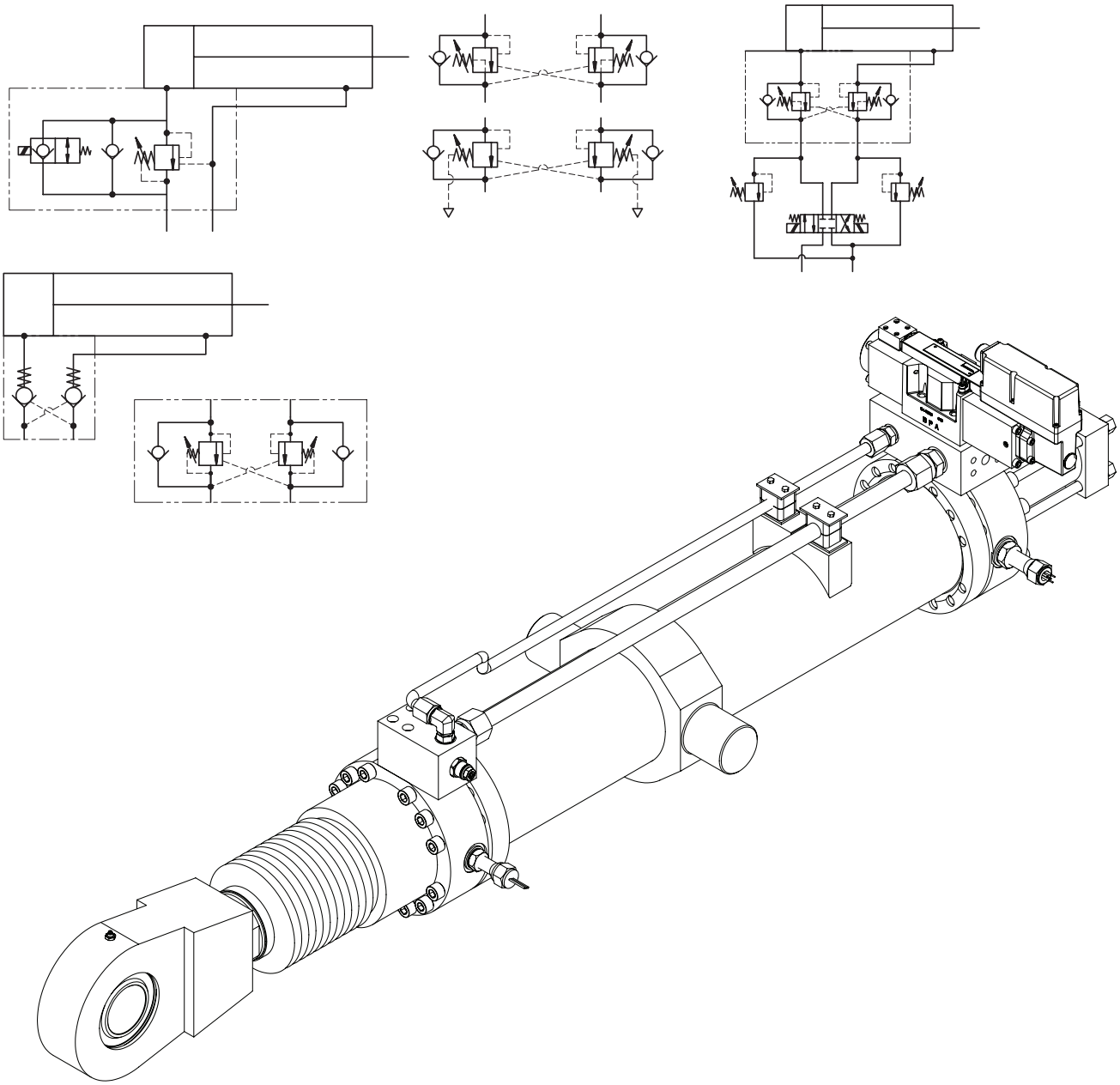

Weights of the Cylinder

		Single Rod End				Double Rod End			
Bore	**Rod**	**MP3/MP5 Mount**	**MS2 Mount**	**MT4 Mount**	**Per 100mm Stroke**	**MP3/MP5 Mount**	**MS2 Mount**	**MT4 Mount**	**Per 100mm Stroke**
mm	mm	Kg	Kg	Kg	Kg	Kg	Kg	Kg	Kg
40	25	11	10	10	1.1	12	10	10	1.5
	28	11	10	10	1.2	12	10	10	1.7
50	32	14	16	15	1.6	16	16	15	2.2
	36	13	16	15	1.8	16	16	15	2.6
63	40	22	26	26	2.3	26	26	26	3.3
	45	22	27	26	2.6	26	27	26	3.9
80	50	35	41	41	3.2	41	41	41	4.8
	56	35	42	42	3.6	41	42	42	5.5
100	63	55	66	66	5.2	65	66	66	7.7
	70	56	67	67	5.8	66	67	67	8.8
125	80	97	119	124	8.2	116	119	124	12.2
	90	97	121	126	9.3	118	121	126	14.3
140	90	131	164	168	10.8	156	164	168	15.8
	100	131	166	170	12.0	158	166	170	18.1
160	100	172	225	222	12.7	207	225	222	18.9
	110	173	228	225	14.0	210	228	225	21.5
180	110	250	318	316	16.1	295	318	316	23.5
	125	251	324	222	18.2	301	324	322	27.9
200	125	320	404	403	19.1	383	404	403	28.7
	140	321	411	410	21.5	390	411	410	33.6
220	140	514	618	644	28.3	601	618	644	40.4
	160	516	630	655	32.0	612	630	655	47.8
250	160	602	756	785	34.7	722	756	785	50.5
	180	604	770	799	38.9	736	770	799	58.9
280	180	938	1101	1203	44.3	1097	1101	1203	64.3
	200	941	1118	1219	49.0	1114	1118	1219	73.7
320	200	1159	1399	1445	57.4	1341	1399	1445	82.1
	220	1157	1413	1458	62.5	1355	1413	1458	92.4

Single Rod End:
For IM25-100-063-0100.0-CS-R-N-N-7-7-0-C-000
The mounting is cap fixed eye with spherical bearing, Ø100mm bore and Ø63mm rod, the weight of the cylinder at zero stroke is 55 kg. For 100mm stroke additional weight is 5.2kg. Total weight of the cylinder will be 55 + 5.2 = 60.2kg

Double Rod End:
For IM25-100-063-0100.0-TD-R-N-N-7-7-0-C-000
The mounting is trunnion mount with double rod, Ø100mm bore and Ø63mm rod, the weight of the cylinder at zero stroke is 66 kg. For 100mm stroke additional weight is 5.2kg. Total weight of the cylinder will be 66 + 7.7 = 73.7kg

Application/Engineering
Data (Continued...)
Application Datasheet

Customer Name			
Customer P/N	Rev	Machine	Function
Contact	Ph	Fax	e-mail

Cylinder Description

Series	Mtg Style	Bore	Rod	Stroke

Cushions: None Rod End Pos Blind End Pos

Weight Connected to Rod (N)

How is Cylinder Mounted

Horizontal	Vertical Rod Up Rod Down	Angle Degrees from Vertical
Rod End Connection		
	Firmly Guided Supported Unsupported Know Side Load (N)	

How is Cylinder Used

Operating Fluid:	Fluid Temp @ Cylinder
Pressure Setting Extend: ____ Mpa	Pressure Setting Retract: ____ Mpa

Stop Internal Ext	Stop Internal Ret	Stop External Ext	Stop External Ret
Force Ext:____N	Force Ret___N	Velocity Ext:	Velocity Ret:

Cycle Rate:	Cycle Life of Cylinder:	Cycle Life Seals:

Pressure spikes expected : No / Yes :___ Mpa	Load Holding Seals: No / Yes : Head / Cap / Both

Environmental Conditions

Standard Factory Very Dirty Outdoors Other:

Application Sketch		**Special Requirements**	
Prepared By	Date	Reviewed By	Date

Notes

ENGINEERING
TOMORROW

Danfoss
14615 Lone Oak Road
Eden Prairie, MN 55344
USA
Tel: 952-937-9800
Fax: 952-294-7722

Danfoss
Danfoss Power Solutions
Nordborgvej 81
DK-6430 Nordborg, Denmark
Phone: +45 7488 2222

Danfoss
No.7 Lane 280 Linhong Road
Changning District,
Shanghai 200335
China
Tel: (+86 21) 5200 0099
Fax: (+86 21) 2230 7240

Printed in USA
Document No. XXX
September 2022