ENGINEERING
TOMORROW

Application Handbook

Industrial Refrigeration
Ammonia and CO2 Application

Revised June 2022

www.danfoss.com/ir

Contents

1. Introduction ... 7
1.1 Refrigerants ... 8
1.1.1 Ammonia - R717 ... 8
1.1.2 Carbon dioxide (CO_2) – R744 ... 8
1.1.3 Halocarbons – CFCs, HCFCs and HFCs ... 8
1.1.4 Hydrocarbons – HCs ... 8
1.2 Refrigerant feed to the evaporator ... 9
1.2.1 Direct expansion system (DX) ... 9
1.2.2 Circulated system (flooded system) ... 9
1.3 One-stage systems ... 10
1.4 One-stage systems ... 10
1.5 Cascade systems ... 12
1.6 Transcritical systems ... 13
2. Compressor controls ... 18
2.1 Reverse flow control ... 18
2.2 Suction pressure control ... 19
2.3 Compressor capacity control ... 20
2.3.1 Step control ... 20
2.3.2 Slide valve control ... 20
2.3.3 Variable speed control ... 20
2.3.4 Hot gas bypass ... 20
2.4 Discharge Temperature Control with Liquid Injection ... 22
2.5 Economizer damper ... 23
2.6 Summary ... 24
3. Condenser controls ... 25
3.1 High-pressure float valve operation ... 25
3.2 Low-pressure float valve operation ... 25
3.3 Air-cooled condensers ... 26
3.3.1 This method utilizes a step controller to control the air flow in the air-cooled condenser by switching the fans on or off according to a condensing pressure signal ... 26
3.3.2 Fan speed control of air-cooled condensers ... 26
3.3.3 This method of condenser fan control is mainly used when a reduction in noise level is desired due to environmental concerns ... 26
3.3.4 Area control of air-cooled condensers ... 26
3.3.5 For area control of air-cooled condensers, a receiver is required. This receiver must have sufficient volume to be able to accommodate the variations in the amount of refrigerant in the condenser ... 26
3.4 Air-cooled condensers ... 29
3.4.1 Control of evaporative condensers ... 30
3.5 Water-cooled condensers ... 31
3.6 Summary ... 33
4. Liquid level regulation ... 34
4.1 High-pressure liquid level regulation system (HP LLRS) ... 35
4.2 Low-pressure liquid level regulation system (LP LLRS) ... 38
4.3 Summary ... 41
5. Evaporator controls ... 42
5.1 Temperature controls ... 43
5.1.1 Media temperature control ... 43
5.1.2 Multi-temperature changeover ... 44
5.2 Liquid supply control ... 45
5.2.1 Direct expansion control ... 45
5.2.2 Flooded evaporator circulation control ... 47
5.3 Injection with a solenoid valve (ICF 20-2) ... 48
5.4 Injection with a pulse width modulation AKV(A) valve ... 49
5.5 Risers ... 50

© Danfoss | Climate Solutions | 2022.10

5.6 Defrost methods ... 53
5.6.1 Electric defrost ... 54
5.6.2 Hot gas defrost ... 54
5.6.3 Hot gas defrosting controls ... 54
5.6.4 Hot gas defrosting sequence ... 54
5.6.5 Controlling the defrost phase ... 56
5.6.6 General hot gas defrosting considerations ... 57
5.6.7 Hot gas defrost for DX evaporators ... 59
5.6.8 Hot gas defrost for pumped liquid circulation evaporators ... 61
5.6.9 Special application: Defrosting of plate freezers ... 62
5.7 Summary ... 64
6. Oil systems ... 65
6.1 Oil cooling controls ... 65
6.2 Oil differential pressure controls ... 68
6.3 Oil recovery system ... 70
6.4 Summary ... 73
7. Safety systems ... 74
7.1 Pressure relief devices ... 74
7.2 Pressure and temperature limiting devices ... 76
7.3 Liquid level safety devices ... 76
7.4 Refrigerant detection ... 77
7.4.1 Sensor technology ... 77
7.4.2 Actions triggered by gas detection ... 78
7.4.3 References ... 79
7.4.4 Summary ... 79
8. Refrigerant pump controls ... 80
8.1 Pump protection with differential pressure control ... 81
8.2 Pump bypass flow control ... 82
8.3 Pump pressure control ... 83
8.4 Summary ... 84
9. Others ... 85
9.1 Filter driers in fluorinated systems ... 85
9.2 Water removal for CO_2 systems ... 86
9.2.1 Two-Phase Flow ... 86
9.2.2 Installation of filter driers in pumped circulation systems ... 87
9.2.3 Installation filter driers in DX systems ... 87
9.3 Water removal for ammonia systems ... 87
9.4 Air purging systems ... 89
9.4.1 High-pressure float control ... 90
9.4.2 Low-pressure float valve ... 90
9.4.3 The Danfoss air purger ... 91
9.4.4 Locating of purge points ... 92
9.5 Heat recovery systems ... 95
10. Using CO_2 in refrigeration systems ... 96
10.1 CO_2 as a refrigerant ... 97
10.2 Comparision of line sizings in CO_2 systems ... 98
10.3 Subcritical CO_2 systems ... 102
10.3.1 Efficiency ... 104
10.3.2 Design pressure ... 104
10.3.3 Stand-still pressure ... 105
10.3.4 Defrosting pressure ... 105
10.4 Special considerations for CO_2 refrigeration systems ... 106
10.4.1 Safety valve ... 106
10.4.2 Evacuating CO_2 systems prior to start-up ... 107

10.4.3 Charging CO_2 ... 107
10.4.4 Release of CO_2 refrigerant ... 107
10.4.5 Filter cleaning ... 108
10.4.6 Trapped liquid ... 108
10.4.7 Trapped CO_2 gas ... 108
10.4.8 Leaks in CO_2-ammonia cascade systems ... 109
10.4.9 Material compatibility ... 109
10.5 Conclusion ... 109
10.6 Safety and gas detection ... 109
10.7 Gas detection ... 110
10.7.1 Location guidelines ... 110
10.7.2 Number of gas detectors in a facility ... 110
10.8 Pressure control CO_2 systems ... 111
10.8.1 Possible control devices in case of high pressure in the CO_2 separator ... 111
10.8.2 Possible control devices in case of low pressure in the CO_2 separator ... 111
10.8.3 Compressor control ... 111
10.8.4 Liquid level control ... 111
10.9 Cascade system controls ... 112
10.9.1 Condenser capacity control ... 112
10.9.2 Compressor capacity controls ... 112
10.9.3 Cascade injection control ... 112
10.10 Control methods for hot gas defrosting ... 112
10.10.1 Hot-gas defrost on pump-circulated evaporators in CO_2 systems ... 112
10.10.2 Hot-gas defrost on DX evaporators in CO_2 systems ... 114
10.10.3 Hot-gas defrost pressure in CO_2 systems ... 116
10.11 Oil in CO_2 systems ... 117
10.11.1 Oil recovery for multi-compression systems ... 118
10.12 Water in CO_2 Systems ... 119
10.12.1 Chemical reactions ... 119
10.12.2 Water in vapour phase ... 119
10.12.3 POE lubricant ... 120
10.12.4 PAO lubricant ... 120
10.12.5 Removing water ... 120
10.12.6 How does water enter a CO_2 system? ... 121
11. Transcritical CO_2 systems ... 122
11.1 Explanation of the transcritical cycle ... 122
11.1.1 Heat rejection ... 123
11.1.2 Design of gas coolers ... 123
11.1.3 The effect of gas cooler control on system efficiency ... 123
11.2 Typical CO_2 transcritical system types ... 125
11.2.1 Commercial booster system ... 125
11.2.2 Commercial booster system with parallel compression ... 126
11.2.3 The effect of intermediate pressure control on system efficiency ... 127
11.2.4 Continuous developments for commercial CO_2 transcritical systems ... 128
11.3 CO_2 in Industrial refrigeration ... 129
11.3.1 NH_3 pump-circulated refrigeration principle ... 129
11.3.2 NH_3/CO_2 pump-circulated refrigeration principle ... 130
11.3.3 Industrial CO_2 TC pump-circulated refrigeration principle ... 130
11.4 Industrial CO_2 transcritical systems ... 131
11.4.1 Transcritical pump-circulated systems ... 131
11.4.2 Liquid level and pump control in CO_2 pump-circulated systems ... 133
11.4.3 Evaporator control for pump-circulation CO_2 systems ... 133
11.4.4 Danfoss Industrial evaporator controller, EKE 400 ... 134
11.4.5 Valves for the liquid feed line (1) ... 135

© Danfoss | Climate Solutions | 2022.10

11.4.6 valves for the wet return line (2) ... 137
11.4.7 Valves for the hot-gas defrost line (3) ... 138
11.4.8 Valves for the liquid-drain defrost line (4) ... 139
11.5 Defrosting of industrial pump-circulated transcritical systems ... 142
11.5.1 Optimal defrost pressure ... 142
11.5.2 Hot gas source ... 142
11.6 Oil management ... 143
11.6.1 Oil carryover and main oil separation ... 144
11.7 Oil return ... 144
11.7.1 Oil return in DX systems ... 144
11.7.2 Oil management in transcritical pump-circulating systems. ... 145
11.7.3 Oil rectifying and oil return in transcritical pump-circulating systems with immiscible oil ... 147
11.7.4 Oil rectifying capacity and oil concentration ... 147
11.8 Heat recovery ... 148
11.8.1 System design ... 148
11.8.2 Control strategy ... 149
11.8.3 Features and challenges ... 150
11.8.3.1 Condensing in the heat-reclaim heat exchanger ... 150
11.8.3.2 Temperature protection ... 151
11.8.4 Conclusion ... 151
11.9 Design pressure and safety ... 151
12. Heat exchangers ... 152
12.1 Heat transfer fundamentals ... 155
12.1.1 Co-current vs counter-current ... 156
12.1.2 Pinch point ... 157
12.1.3 Condensers ... 157
12.1.4 Evaporators ... 158
12.1.5 Limitations to heat exchangers ... 159
12.2 Plate heat exchangers ... 160
12.3 Installation of heat exchangers ... 163
12.3.1 Evaporators ... 163
12.3.2 DX evaporators ... 165
12.3.3 Condensers ... 165
12.3.4 Oil coolers ... 167
12.3.5 De-superheaters ... 168
12.3.6 Subcoolers ... 168
12.3.7 Economizers ... 169
12.3.8 Superheaters ... 170

Note

Some of the solutions presented here might be subject to special requirements in local laws and legislation and Danfoss has made no verification of such and expressly disclaims any compliance there with. A licensed and skilled professional engineer should always be consulted when designing, using, making or selling any device or equipment to ensure compliance with applicable laws and standards.

Refrigeration systems and methods of operating the same may be subject to intellectual property rights in some jurisdictions. A licensed attorney should always be consulted when designing, using, making or selling any such system, methods or equipment to ensure freedom to operate.

Danfoss shall have no liability or obligation to indemnify or hold harmless for any claims, legal proceedings, losses, actions, damages, suits, judgments, liabilities, and expenses, including attorneys' fees, arising from any information provided in this document, or arising out of the modification or combination of any Danfoss product or system with any third party equipment, materials or intellectual property.

All diagrams and drawings are included as principle sketches and for illustration purposes only. All Danfoss products and pipe lines etc. should be dimensioned according to the actual capacity and temperature range they are to be used at. It is the responsibility of the designers to ensure that not only is the principle applied correctly, but also the surrounding system is appropriate with regards to issues such as, and not exclusively, serviceability, safety and efficiency.

Any information, including, but not limited to information on selection of product, its application or use, product design, weight, dimensions, capacity or any other technical data in this document shall be considered informative, and is only binding if and to the extent, explicit reference is made in a quotation or order confirmation by Danfoss. Danfoss reserves the right to alter its products without notice.

This document itself, all text, diagrams, drawings and all trademarks in this material are property of Danfoss A/S or Danfoss group companies. Danfoss and the Danfoss logo are trademarks of Danfoss A/S. All rights reserved.

© Danfoss | Climate Solutions | 2022.10

1. Introduction

The refrigeration systems and their applications described in this guide are all vapour compression refrigeration systems.

Vapour compression refrigeration systems utilise the heat absorbed or released in a phase change, the latent heat, of refrigerants. The boiling temperature changes with the pressure of the refrigerant.

The refrigerant is pressurised at different pressure levels, evaporation pressure levels and condensation pressure levels, to absorb heat from the heat source (cold room) and release heat to the heat sink (ambient), thus the refrigerant acts as a heat transport media. The refrigerant is evaporated and absorbs heat from the environment that is to be cooled. Once the refrigerant is evaporated, it is compressed to a higher pressure level, where the saturation temperature is higher than the ambient temperature for the refrigerant to condense and release heat. When the refrigerant is fully condensed, it is expanded to lower the pressure, the evaporation pressure, corresponding to a saturation temperature that is low enough for the refrigerant to absorb heat from the cooled environment, thus evaporating, and the processes repeat themselves.

To visualise the processes, a log(p)-h diagram is shown in Figure 1.1. The log(p)-h diagram shows the thermodynamic properties of a refrigerant. It is used for representing refrigeration cycles by plotting in state points from the refrigeration cycle. It can also be used for reading values for the state points in a refrigeration cycle. The log(p)-h diagram has been created with the Danfoss calculation tool Coolselector2.

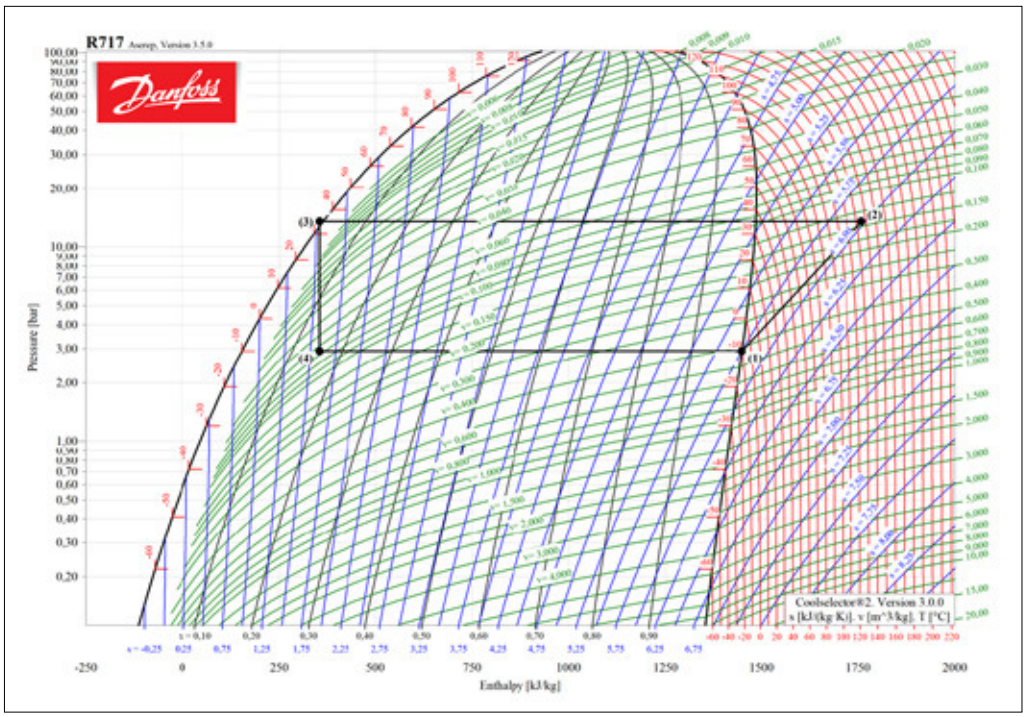

Figure 1.1: Log(p)-h diagram for one-stage ammonia system

A simple one-stage ammonia refrigeration cycle is shown in the log(p)-h diagram above. In this example, the evaporation temperature is -10 °C (14 °F) and the condensation temperature is 35 °C (95 °F).

The bell shape seen in the diagram is the two-phase area of the refrigeration and the horizontal lines inside the bell shape represent the evaporation ((4) to (1)) and the condensation ((2) to (3)). The area to the left of the bell shape is the liquid phase, while the area to the right of the bell shape is the vapour/gas phase. In the gas phase, the pressure is increased from (1) to (2) - this is the vapour compression. From (3) to (4), the refrigerant liquid is expanded to the evaporation pressure level.

1.1 Refrigerants

The refrigerant is the medium that transports energy from the evaporator to the condenser. Different refrigerants have different thermodynamic properties, such as latent heat, density, critical point etc. Different refrigerants also have different safety precautions, environmental impacts and regulations to be taken into account when designing a refrigeration system.

The most common refrigerants used in industrial systems are:

- Ammonia – R717
- Carbon dioxide (CO_2) – R744
- Halocarbons – CFCs, HCFCs and HFCs
- Hydrocarbons – HCs

1.1.1 Ammonia - R717

Safety systems, such as safety relief valves and gas detectors are described in chapter REF.Ammonia is a natural refrigerant with the chemical composition NH_3. Ammonia is inexpensive, easy to manufacture and has a high amount of latent heat, which is why it is a very commonly used refrigerant in industrial applications. At ambient conditions, 20 °C (68 °F) and 1 atm (14.7 psi), ammonia is lighter than air. Additionally, ammonia has no ozone depletion potential (ODP) and no global warming potential (GWP).
Ammonia's operational area as a refrigerant ranges from around -40 °C (-40 °F) of evaporation temperature and up. Ammonia is not compatible with copper, so steel components should be used.
Ammonia is toxic and flammable (in certain concentrations), so proper safety precautions must be taken when handling large amounts of ammonia.

1.1.2 Carbon dioxide (CO_2) – R744

CO_2 is a non-toxic (in small concentrations), non-flammable substance that is present in the atmosphere. CO_2 has become more popular in recent years as CFC refrigerants have been phased out, especially in smaller systems and as a secondary refrigerant in commercial applications.

The challenges regarding CO_2 are the high pressure for condensation/recuperating and the low critical temperature, requiring transcritical operation with warm ambient temperatures. CO_2 can be dangerous when leaking, as it is not self-alarming like ammonia. Large concentrations of CO_2 can cause dizziness and, in the most extreme cases, death. The other side of CO_2's high pressure is that it is very efficient at low temperatures, making it a good refrigerant for freezing applications. However, CO_2's triple point at -56.6 °C/5.1 bar abs (-69.9 °F / 73.9 psi) is the lower limit for its use.

1.1.3 Halocarbons – CFCs, HCFCs and HFCs

Halocarbons are made by replacing one or more hydrogen atoms with halogens in methane and ethane molecules.

Three classes of these exists: CFCs (chlorofluorocarbons), HCFCs (hydrochlorofluorocarbons) and HFCs (hydrofluorocarbons). These refrigerant classes are known for:

CFCs: All hydrogen atoms are substituted by either chloride or fluoride, e.g. R11. These are very stable compounds with a long lifetime. CFCs are non-toxic and non-flammable refrigerants. However, these refrigerants have been phased out because they contribute to the breakdown of the ozone layers in the Earth's stratosphere when they are leaked.

HCFCs: At least one hydrogen atom is present in these molecules, e.g. R22, which is used to replace R12. These components are less stable and have shorter lifetimes, thus they are less harmful regarding ozone layer depletion and global warming potential. HCFCs are being phased out by some countries.

HFCs: These halocarbons do not contain either chlorine or bromine, e.g. R134a, and are therefore not ozone depleting. However, they do still have a high GWP and are therefore on a phasedown. The properties of R134a are close to R12, and therefore R134a can normally replace R12 in new and existing systems. Many new blends are entering the market at the present time though. However, due to the relatively high GWP compared to natural refrigerants, there is a risk that these will be phased out in the future.

1.1.4 Hydrocarbons – HCs

Hydrocarbons have become very common in domestic refrigeration applications. Hydrocarbons are flammable and explosive, but in small systems the charge is typically too low to pose any risk, and these systems are typically hermetic. Isobutane - R600a is a hydrocarbon refrigerant which is used in domestic applications. R290 – propane – is used in some larger chillers but is yet to be seen in large-scale industrial applications.

© Danfoss | Climate Solutions | 2022.10

1.2 Refrigerant feed to the evaporator

There are two common ways that refrigerant is fed to the evaporator in a vapour compression refrigeration system, which are presented in the following paragraphs.

1.2.1 Direct expansion system (DX)

After expansion, the liquid/vapour mixture of refrigerant is fed directly to the evaporator. The refrigerant is then fully evaporated, so that only the vapour phase is present at the evaporator outlet. To ensure that no liquid is present in the suction line, the refrigerant vapour is superheated (the actual temperature is above saturation) in the evaporator before being fed to the compressor.

An expansion valve is controlled by the superheat. This is either done by a thermostatic expansion valve or an electronic expansion valve.

By keeping a constant level of superheat at the evaporator outlet, the expansion valve feeds the right flow of refrigerant to the evaporator according to the cooling load. A certain level of superheat should ensure that only refrigerant vapour is fed to the compressor suction. Liquid droplets in the suction will cause liquid hammering in the compressor.

A sketch of a direct expansion evaporator is shown in Figure 1.2. The evaporator is depicted as a plate heat exchanger, with the cooled product on the left side and the refrigerant on the right side. The thermostatic expansion valve is regulated based on the superheat measured on the suction line (line to compressor).

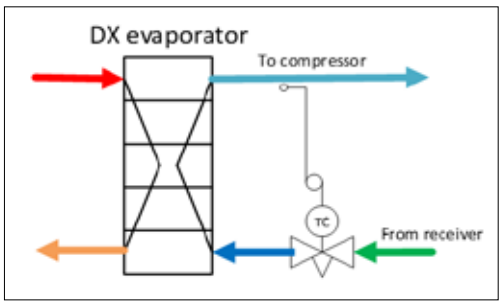

Figure 1.2: Direct expansion evaporator

NOTE: A thermostatic expansion valve can only keep a constant superheat, rather than a constant evaporating temperature.

1.2.2 Circulated system (flooded system)

In circulated systems, the liquid/vapour mixture of refrigerant is separated after the expansion in a separation vessel. The saturated liquid phase of the refrigerant is pumped, or driven by gravity, into the evaporator and is partially evaporated, so that a liquid/vapour mixture of the refrigerant is present at the evaporator outlet. In the separator vessel, only the saturated vapour will be fed to the compressor, while the saturated liquid is circulated through the evaporator.

As the evaporator does not need to superheat the suction vapour, the entire surface is used for evaporation, making the flooded evaporator much more efficient. Furthermore, creating superheat in a DX evaporator requires a higher temperature difference and thus the evaporating temperature in a flooded evaporator can be closer to the product temperature, allowing for a more efficient refrigeration system.

A circulation system is therefore more efficient than a corresponding DX system.

A sketch of a flooded evaporator is shown in Figure 1.3. The evaporator type is the same as in Figure 1.2. For the flooded evaporator, the pump is shown, but it would be left out if it were a thermosyphon evaporator driven by gravity.

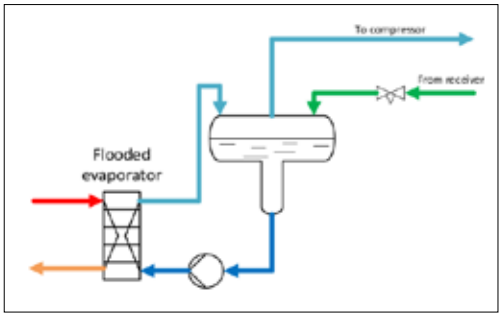

Figure 1.3: Pumped flooded evaporator

1.3 One-stage systems

One-stage or single-stage refrigeration systems are refrigeration systems where the compression from low pressure to high pressure is done in one stage. A one-stage refrigeration system with the most basic components is shown in Figure 1.4.

Neither the evaporator nor the condenser is specified as a specific type, but rather represent the general concept of evaporation and condensation. Both can be constructed and controlled in a number of ways.

A log(p)-h diagram for a one-stage system can be seen in Figure 1.1. The numbers shown in Figure 1.4 corresponds to the numbers shown for the state points in the log(p)-h diagram.

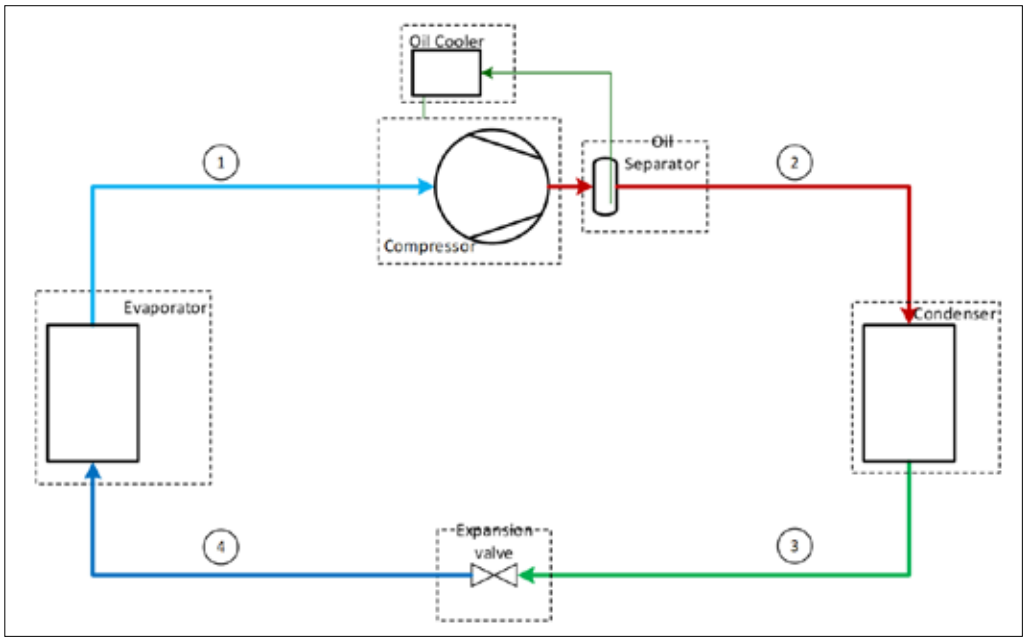

Figure 1.4: System diagram for a one-stage system

1.4 Two-stage/ multistage systems

A two-stage or multistage refrigeration systems are refrigeration systems with two or more stages of vapour compression.

Industrial two-stage refrigeration systems usually have inter-stage cooling between compression stages to cool the discharge gas from the first compression stage.

By cooling the discharge gas from the low-pressure compressor, excessively high discharge temperatures from the high-pressure compressor are avoided. The cooling in the inter-stage cooler is supplied by expanding some of the liquid refrigerant from the condenser to the intermediate pressure, where some of it evaporates in the process of cooling the LP compressor discharge gas. The gas mixed from cooled LP compressor discharge gas, refrigerant flashed and refrigerant evaporated is passed to the HP compressor.

Two or more stages of vapour compression are used when there is a large difference between the evaporating and condensing temperature, which often results in compression ratios that are too high for the compressors or results in other undesirable operating conditions. Additionally, the desire for another temperature level or efficiency considerations may result in a two-stage system being chosen over a single stage.

It is therefore suitable to have two or more stages of compression to have the compressors operating at their optimal compression ratio, and within their operation limits.

A system sketch of a two-stage refrigeration system is shown in Figure 1.5. The figure is shown with an inter-stage cooler and economiser. An economiser like the one shown in the system diagram is used for subcooling the refrigerant after the condenser by bypassing and flashing some refrigerant. The bypassed refrigerant is evaporated and fed to an economiser port in the high-pressure compressor which can increase the capacity and/or the efficiency of the system. The LP compressor may also have an economiser, but it is not shown here.

© Danfoss | Climate Solutions | 2022.10

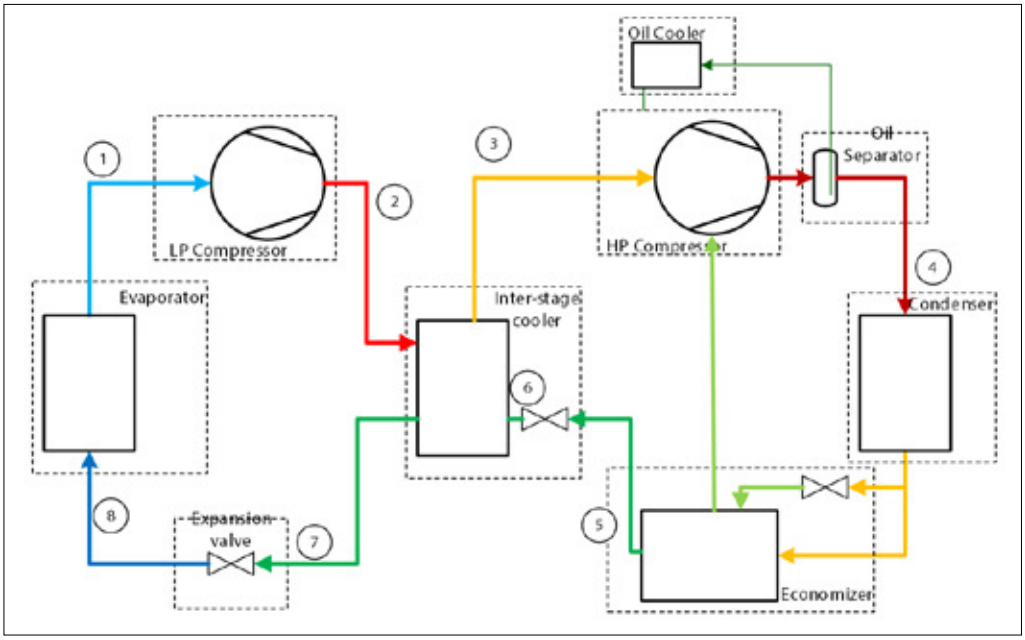

Figure 1.5: System diagram for two-stage system

A log(p)-h diagram for the two-stage system is shown in Figure 1.6. The numbering in Figure 1.5 follows the numbering of the state points shown in the log(p)-h diagram. It should be noted that the evaporation temperature is -30 °C (-22 °F) and the condensation temperature is kept at 35 °C (95 °F), as for the example for the one-stage system. It should be noted how the inter-stage cooler helps to keep a low discharge gas temperature from the high-pressure compression stage. If no inter-stage cooling was used, the line (1) to (2) would be extended and end on the same horizontal level as (4), but shifted to the right, thus increasing the discharge temperature to around 160 °C (320 °F), which is not acceptable (primarily for oil considerations).

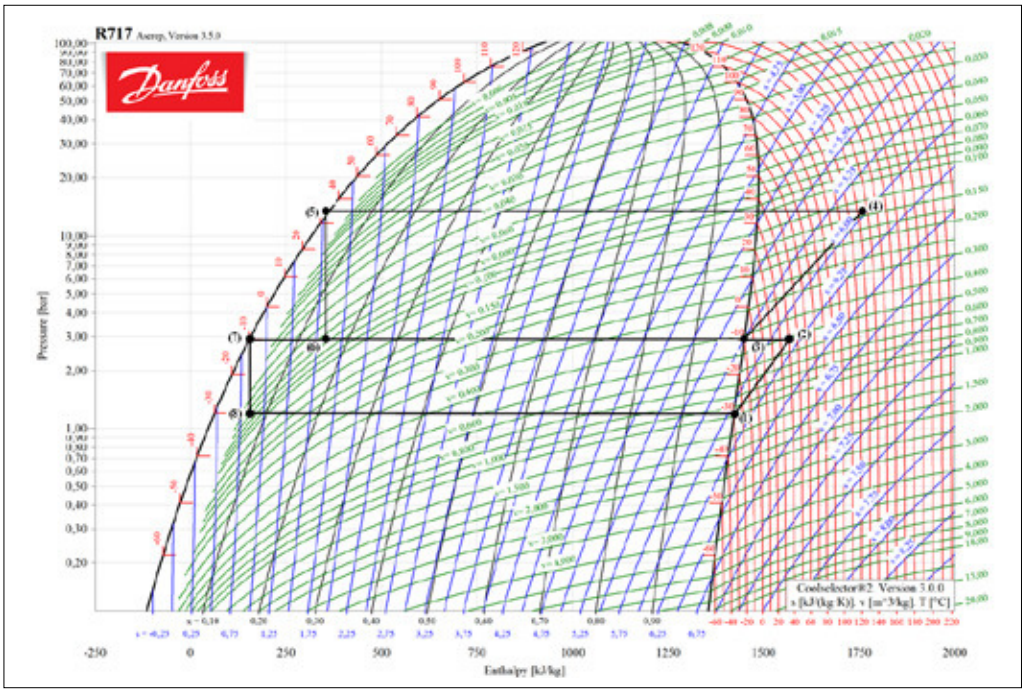

Figure 1.6: Log(p)-h diagram for two-stage ammonia system

In the above Log(P)-H diagram, the economiser is not shown. The economiser port is a port in screw compressors that allows access to the compression chamber after the suction port has closed. As such, if a high enough pressure is applied to the economiser port, an additional refrigerant flow can be added to the compressor without affecting the suction flow. This is utilised with the economiser, which is a heat exchanger that further cools the liquid from the condenser. To do this, a little of the condenser liquid flow is flashed to a lower pressure/temperature, where it is evaporated to cool the remaining liquid. That modifies the Log(P)-H diagram a little:

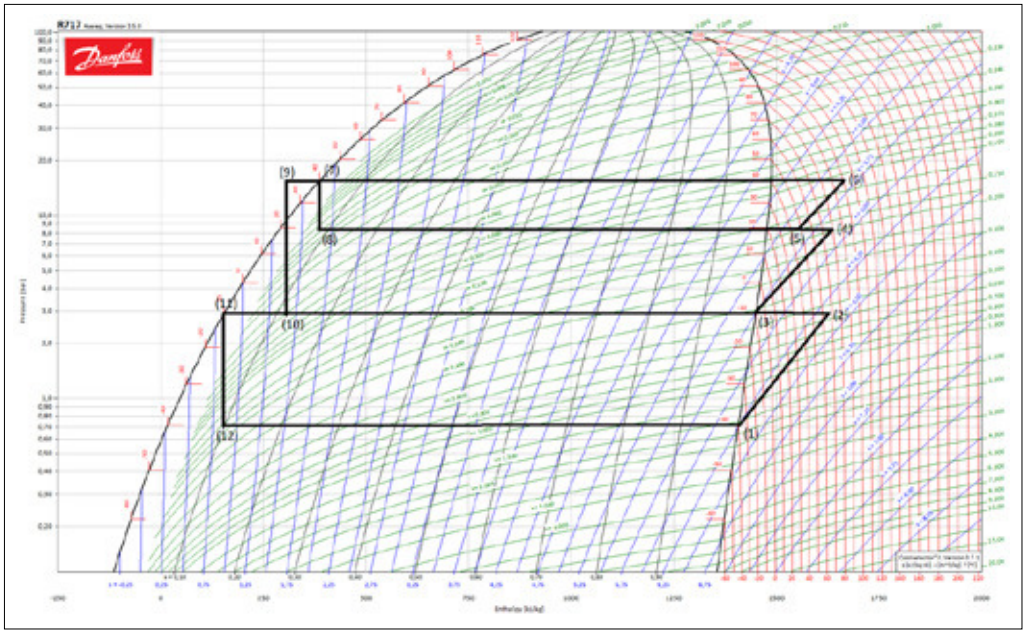

Figure 1.7: Log(p)-h diagram for two-stage ammonia system with economizer on the high stage

Low-stage compression from (1) to (2), de-superheating in the inter-stage cooler from (2) to (3) and initial high-stage compression from (3) to (4) is the same as in the non-economised system. The discharge from the high-stage compressor (6) is condensed from (6) to (7) as before. After the condenser (7), a small amount of refrigerant is flashed to a lower temperature (8), where it is evaporated and added to the partially compressed suction gas of the high-stage compressor. The resulting mixture is (5), which is compressed together to the final discharge at (6). The evaporative capacity is used to sub-cool the remaining liquid from (7) to (9). It is noteworthy that the liquid flashed to the intermediate temperature is further to the left than it would have been without the economiser, thus the enthalpy difference from (10) to (3) is bigger and that increases the compressor's cooling capacity. The power consumption is increased as well, because there is an additional mass flow that needs to be compressed, but the overall effect – depending on the operating conditions – is a higher cooling capacity and, usually, a higher COP.

1.5 Cascade systems

A cascade system consists of two separate refrigeration circuits. The separate refrigeration circuits are connected by a heat exchanger, which acts as a condenser for the low-temperature circuit and an evaporator for the high-temperature circuit.

The refrigerants for the two circuits can be different and optimised for each circuit. For example, the refrigerant for the high-temperature circuit could be ammonia, and the refrigerant for the low-temperature circuit could be CO_2.

A CO_2/ammonia system needs a smaller charge of ammonia and proves to be more efficient in low-temperature refrigeration than a similar two-stage ammonia system.

A system diagram for a cascade system is shown in Figure 1.8. The cascade system diagram is somewhat similar to the two-stage system, where the inter-stage cooler is replaced by a cascade cooler, thus making two closed cycles. A cascade system is usually more complex than a two-stage system, but it offers some benefits. CO_2 is very efficient down to very low evaporating temperatures where ammonia's efficiency drops, while ammonia can condense at relatively low pressure against warm ambient temperatures, where CO_2 has to go transcritical where the efficiency drops. So, choosing CO_2 in the LP circuit and ammonia in the HP circuit allows for the best of both worlds.

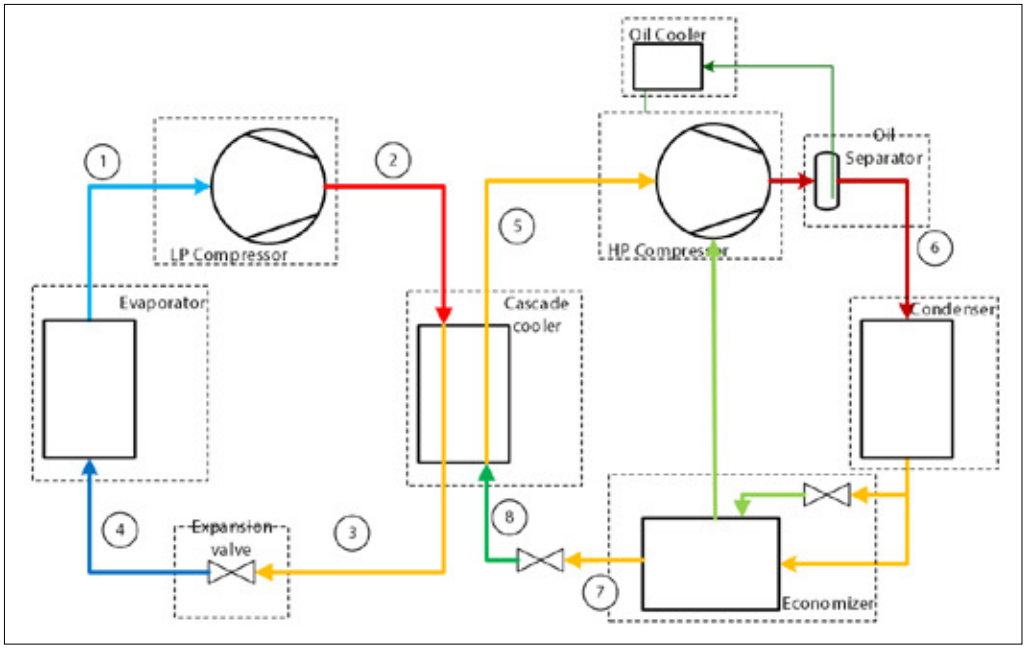

Figure 1.8: Cascade system diagram

1.6 Transcritical systems

The properties of CO_2 make it necessary to operate the system in a different way. The 'critical point' – the top of the bell-shaped two-phase area – is at 31 °C / 72.8 bar (87.8 °F / 1055.9 psi). In areas/periods where the ambient temperature is low, CO_2 can be operated with condensing below the critical point. In that case the cycle is, in principle, the same as for other refrigerants (different pressures and enthalpies), but if the ambient temperature is relatively high, it is no longer possible to condense in the traditional way. Above the critical point, the refrigerant is called a transcritical fluid. The transcritical fluid does not condense, but rather displays a gradual change of density as it is cooled. In a traditional condensing process, the condensing temperature defines the pressure, but in the transcritical fluid there is no such connection. Thus, the gas cooling pressure (equal to compressor discharge pressure) needs to be controlled.

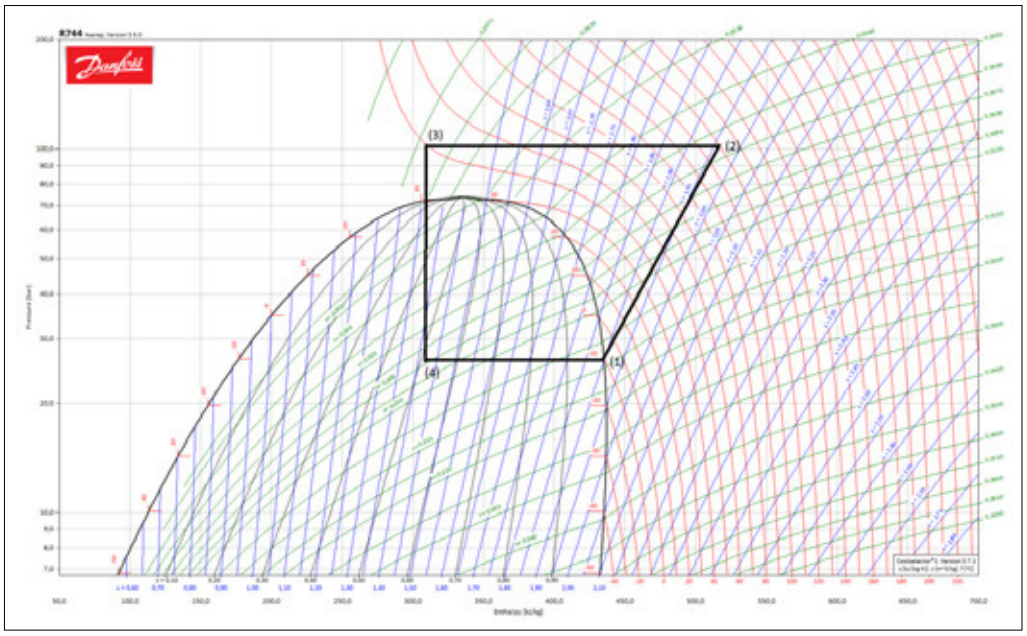

Figure 1.9: Log(p)-h diagram for transcritical CO_2 system

Evaporation takes place from (4) to (1) and compression from (1) to (2) as in other refrigeration systems. From (2) to (3) is the 'gas cooling' process that replaces the condensing process. Point (3) is defined by the outlet temperature of the gas cooler – here set to 40 °C (104 °F) – and the pressure that is controlled by the expansion device that expands to (4). The actual pressure in the gas cooler is based on an analysis of the cycle. Consider a case where the gas cooler outlet is at 40 °C (104 °F), but different pressures are controlled. The corresponding cycles are as shown below:

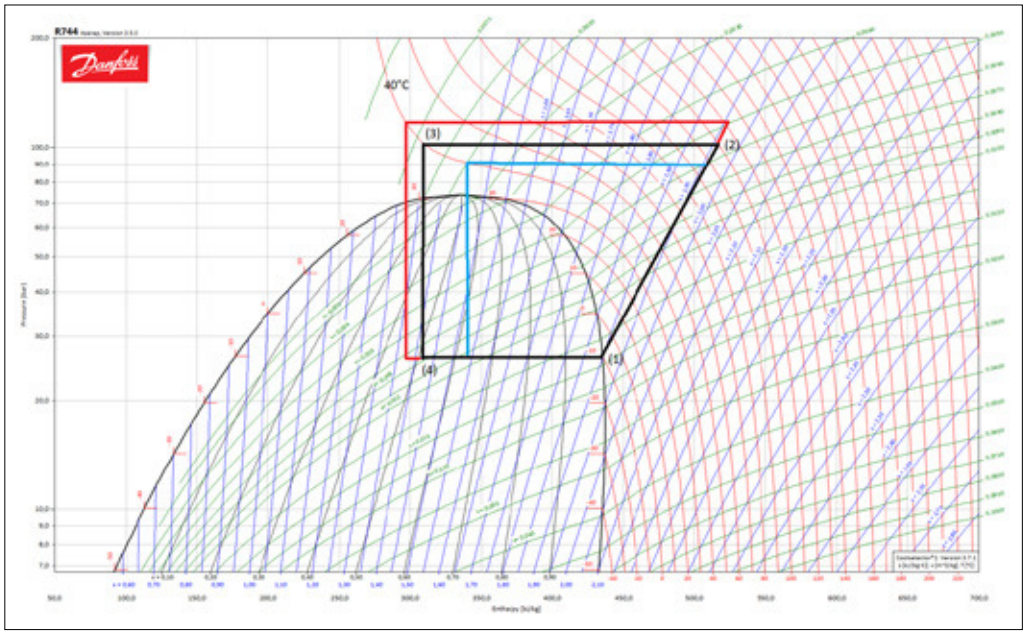

Figure 1.10: Log(p)-h diagram for a trancritical CO_2 system at different gas cooler pressures

The cooling capacity of the system is the enthalpy difference between points (1) and (4) multiplied by the mass flow. The necessary compression power is the enthalpy difference between points (2) and (1) (horizontally) multiplied by the mass flow. The COP of the system is thus (H1-H4)/(H2-H1), which is independent of the mass flow. It can be seen that if the pressure is varied up (red) or down (blue), both the cooling capacity and power consumption change. Calculating the COP along the (red) temperature curve, it can be found to have a maximum at a specific pressure, which for 40 °C (104 °F) works out to be 102.4 bar (1485.2 psi). Mapping this maximum COP across different gas cooler exit temperatures has resulted in a curve that expresses the best pressure for a given gas cooler exit temperature. This curve has been implemented in the Danfoss EKC 326 controller.

Controlling the gas cooler pressure with the expansion device results in a problem. Since it is intended that the low-pressure side be supplied with the right amount of liquid – especially with DX operation of the low-pressure evaporators – it is simply not possible to have an expansion valve serve both purposes at once. The solution is to make an intermediate stop in the form of a receiver. The transcritical fluid is flashed from the gas cooler exit through the high-pressure valve into the receiver. In the receiver, the gas and liquid part is separated, the liquid part is flashed to the evaporators as necessary, while the gas part is reduced in pressure and fed to the compressor's suction line, thereby controlling the pressure in the receiver.

© Danfoss | Climate Solutions | 2022.10

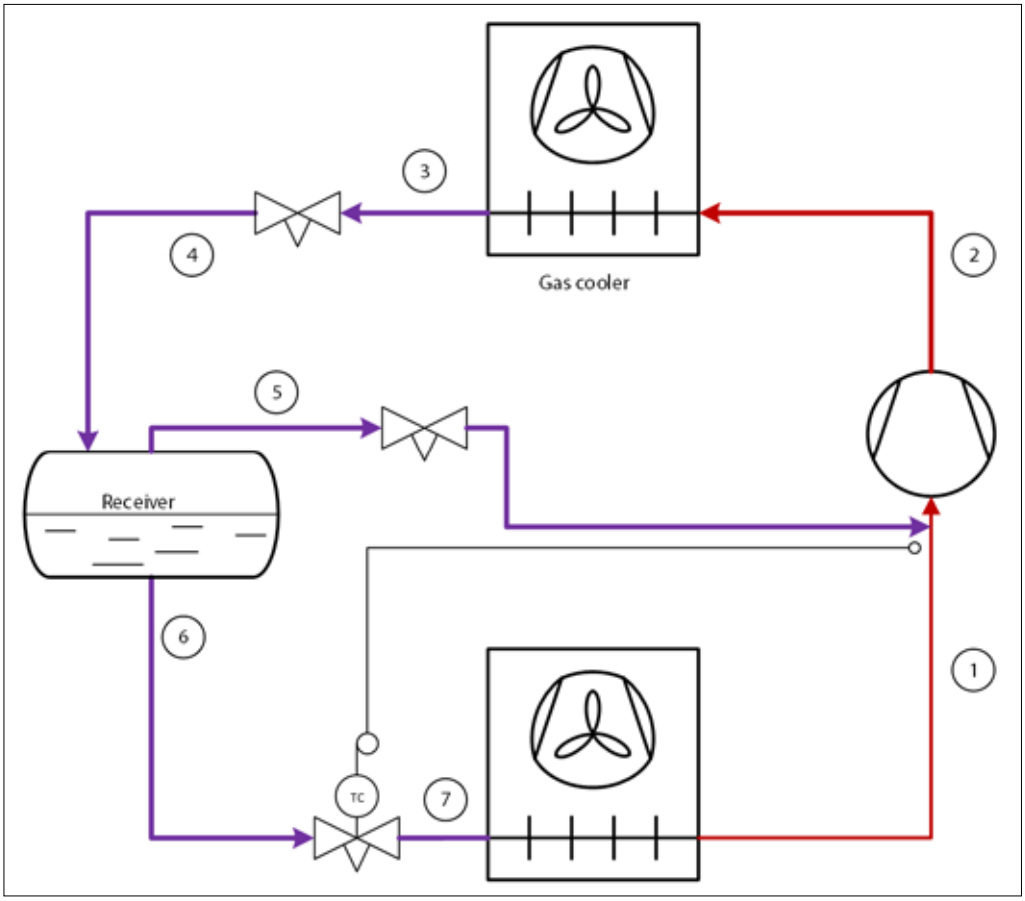

Figure 1.11: Transcritical CO_2 system with intermediate pressure receiver

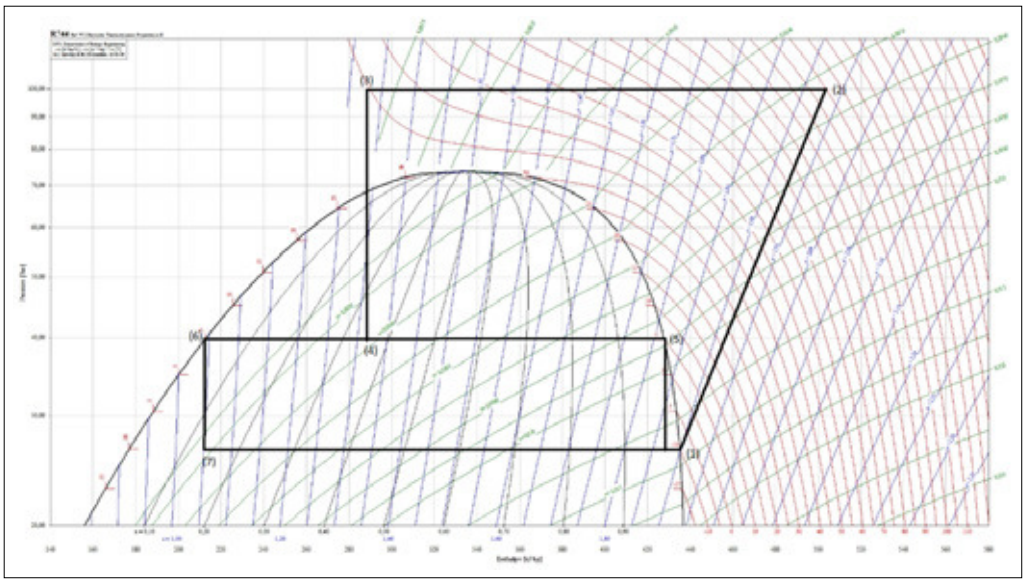

Figure 1.12: Log(p)-h diagram for a transcritical CO_2 system with intermediate pressure receiver

This process can be optimised. The gas from the receiver is reduced in pressure to the compressor suction, however it is possible to take advantage of the higher pressure in the receiver to employ another compressor to compress this gas to gas cooler pressure with a higher efficiency due to the higher suction pressure.
This is called parallel compression.

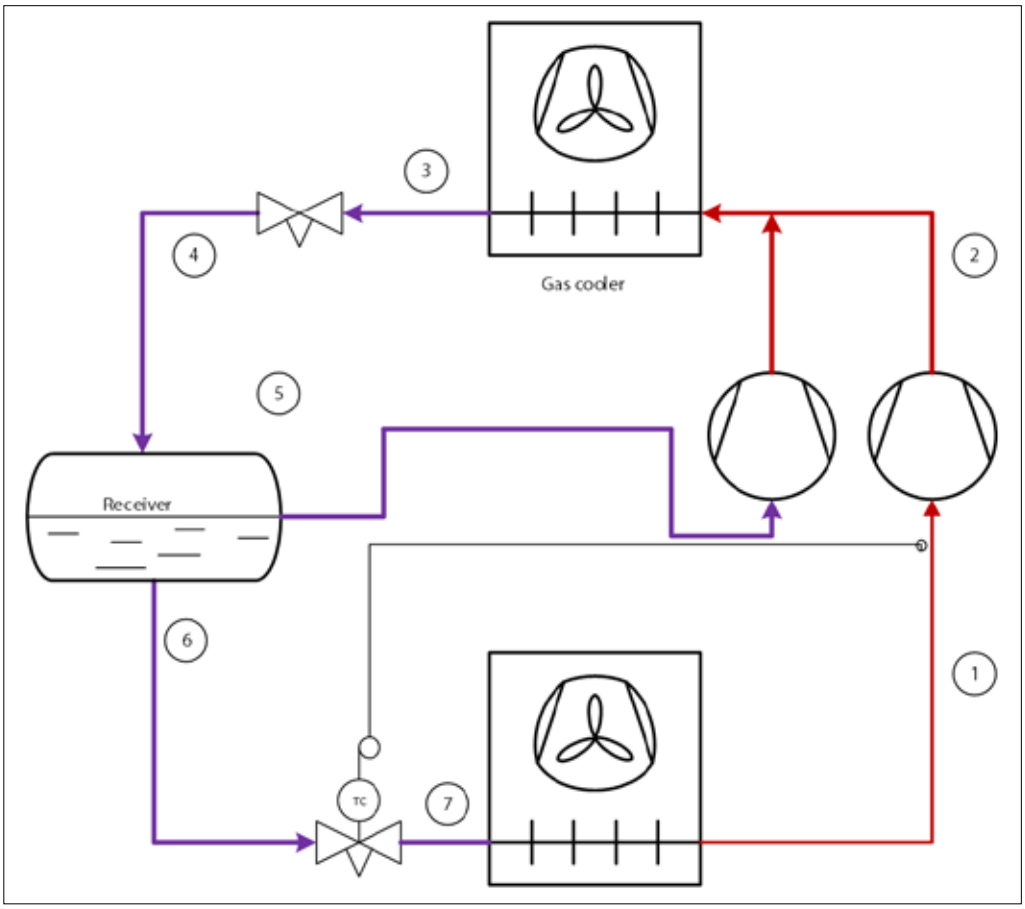

Figure 1.13: Transcritical CO_2 system with parallel compression

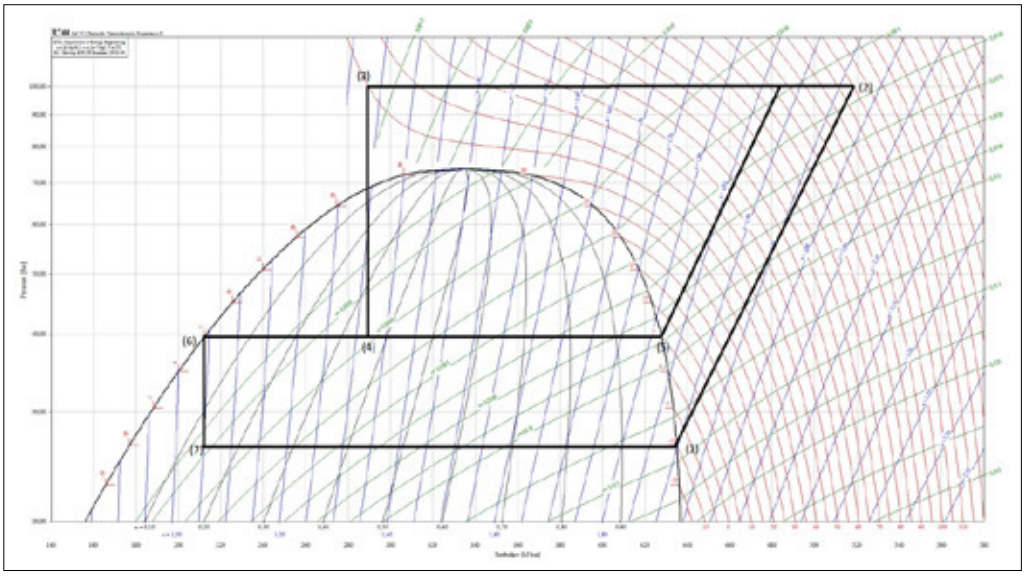

Figure 1.14: Log(P)-h diagram for a transcritical CO_2 system with parallel compression

© Danfoss | Climate Solutions | 2022.10

One further optimisation for CO_2 transcritical systems is the use of ejectors. Ejectors utilise the power in the expansion from gas cooler pressure to lift a gas flow to a higher pressure.

One of several different ways of employing this is to lift part of the suction gas from the low-stage compressor to the suction of the parallel compressor, resulting in an efficiency gain.

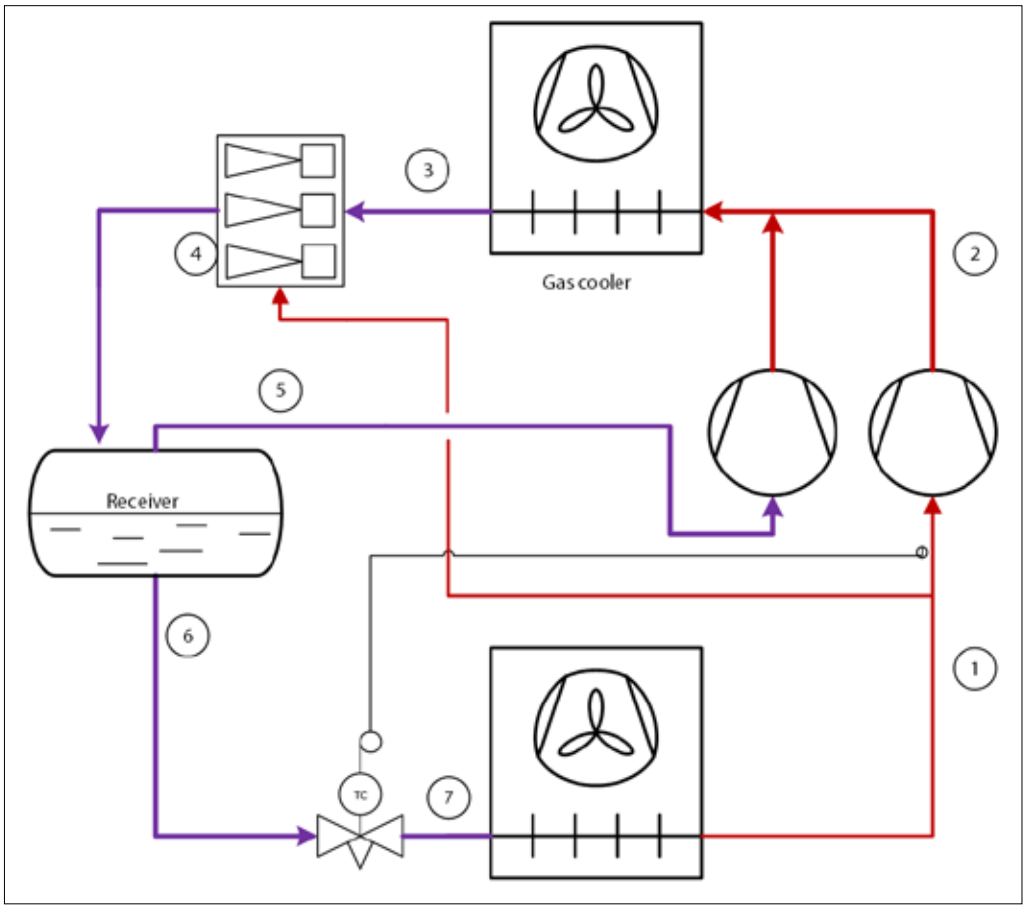

Figure 1.15: Transcritical CO_2 system with parallel compression and gas ejectors

2. Compressor controls

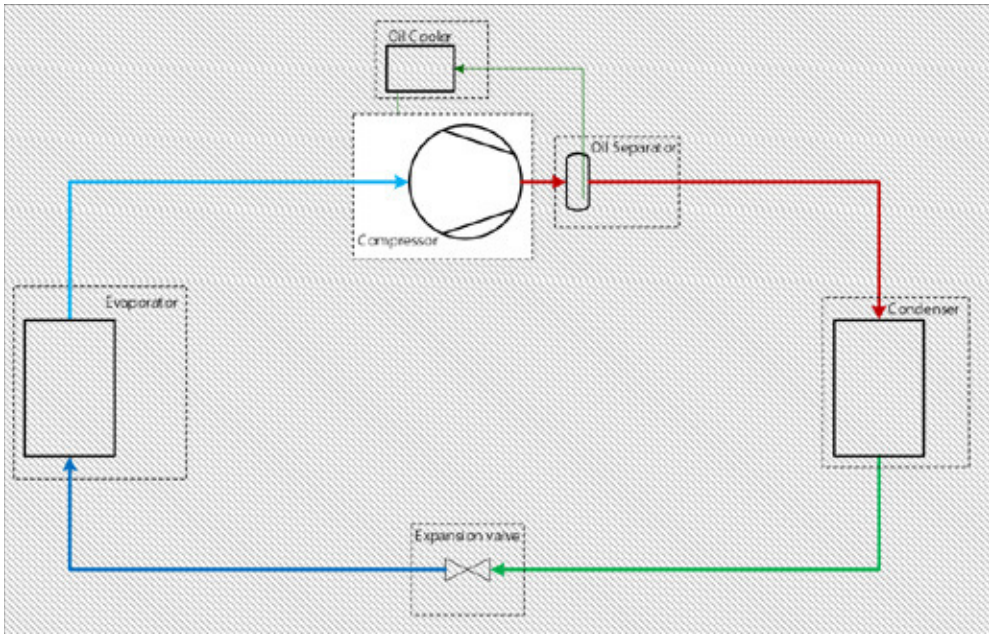

The compressor is the 'heart' of the refrigeration system. It has two basic functions:

Maintain the pressure in the evaporator so that the liquid refrigerant can evaporate at the required temperature.

Compress the refrigerant so that it can be condensed at a higher temperature.

The basic function of compressor control, therefore, is to adjust the capacity of the compressor to the actual demand of the refrigeration system so that the required evaporating temperature can be maintained.

If the compressor capacity is greater than the demand, the evaporating pressure and temperature will be lower than that required, and vice versa.

Additionally, the compressor should not be allowed to operate outside of the approved operation envelope for the mechanical safety of the compressor and operational safety of the entire system.

2.1 Reverse flow control

Reverse flow and condensation of refrigerant during stand-still from the condenser to the oil separator and the compressor should be avoided at all times. For piston compressors, reverse flow can result in liquid hammering. For screw compressors, reverse flow can cause reversed rotation and damage to the compressor bearings. To avoid this reverse flow, it is necessary to install a check valve on the outlet of the oil separator.

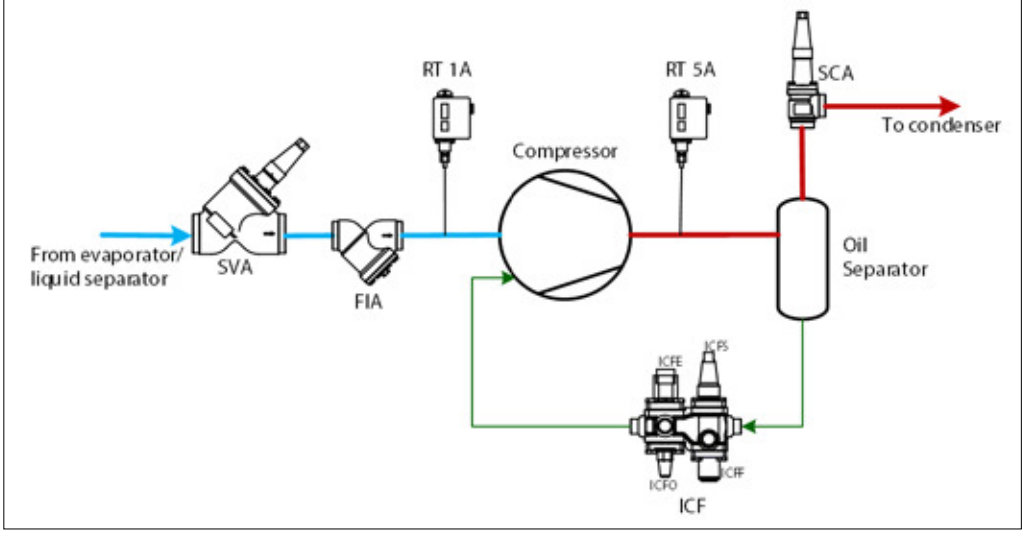

Application Example 2.1.1: Reverse flow control

© Danfoss | Climate Solutions | 2022.10

The stop check valve SCA can function as a check valve when the system is running and can also shut off the discharge line for service as a stop valve. This combined stop/check valve solution is easier to install and has lower flow resistance compared to a normal stop valve plus check valve installation.

When selecting a stop check valve, it is important to:

Select a valve according to the capacity and not the pipe size.

Consider both the nominal and part-load working conditions. The velocity in the nominal condition should be close to the recommended value, while at the same time, the velocity in the part-load condition should be higher than the minimum recommended velocity.

Pressure switches RT 1A and RT 5A are shown in the suction line and discharge line of the compressor. It is important to have pressure switches to cut-out or cut-in operation if the pressure fluctuates outside the operational range in the suction and discharge line.
Not all compressors are delivered with built-in controls and safety switches, therefore the RT 1A and RT 5A are shown. **The pressure switches are not shown for all application examples, but they should always be present in the system.** Often these switches are part of the compressor package.

For details on how to select valves, please refer to the product catalogue and use the Danfoss software tool Coolselector2 for sizing the valve according to the system capacity.

2.2 Suction pressure control

During start-up or after defrosting, the suction pressure needs to be controlled, otherwise it may be too high, and the compressor motor will be overloaded.

The electric motor for the compressor may be damaged by this overloading.

There are two ways to overcome this problem:

Start the compressor at part load. The capacity control methods can be used to start the compressor at part load, e.g. unload part of the pistons for multi-piston reciprocating compressors, or bypass some suction gas for screw compressors with slide valves, etc.

Control the suction pressure for reciprocating compressors. By installing a back pressure-controlled regulating valve in the suction line, which will not open until the pressure in the suction line drops below the set value, suction pressure can be kept under a certain level.

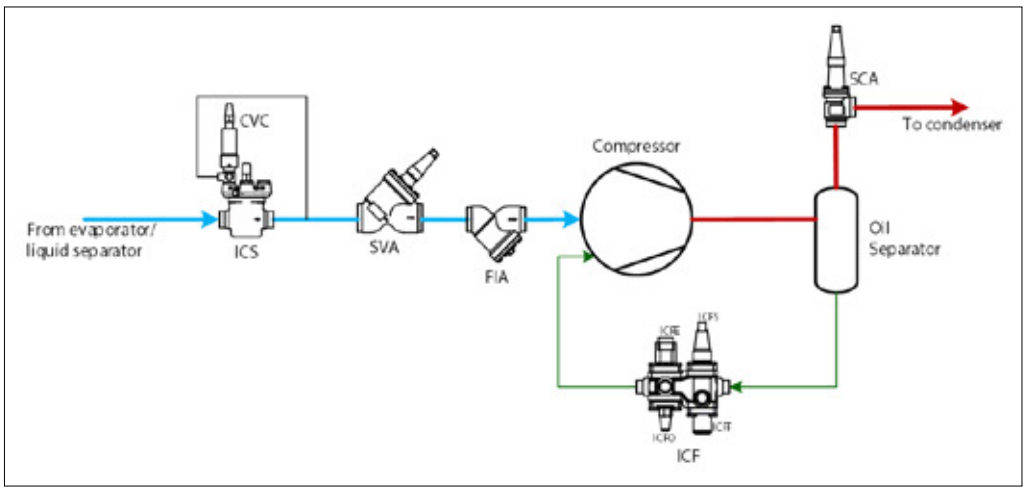

Application example 2.2.1: Crankcase pressure control

In order to control the suction pressure during start-up, after defrosting, or in other cases when the suction pressure may be too high, the pilot-operated servo valve (ICS) with the back pressure controlled pilot valve (CVC) is installed in the suction line. The ICS will not open until the downstream suction pressure falls below the set value of the pilot valve (CVC). In this way, the high-pressure vapour in the suction line can be released into the compressor gradually, which ensures a manageable capacity for the compressor motor.

2.3 Compressor capacity control

The compressor in a refrigeration system is normally selected to be able to satisfy the highest possible cooling load. However, the cooling load during normal operation is usually lower than the design cooling load. This means that it is always necessary to control the compressor capacity so that it matches the actual cooling load. There are several common ways to control the compressor capacity:

2.3.1 Step control

This means to unload cylinders in a multi-cylinder compressor, to open and close the suction ports of a screw compressor, or to start and stop some compressors in a multi-compressor system. This system is simple and convenient. Furthermore, efficiency decreases very little during part-load by step control, although this regulation is by nature coarser than many other regulation types. It is especially applicable to systems with several multi-cylinder reciprocating compressors.

2.3.2 Slide valve control

The most common device used to control the capacity of a screw compressor is the slide valve. The action of the oil-driven slide valve allows part of the suction gas to avoid being compressed. The slide valve permits a smooth and continuous modulation of capacity from 100% down to 10%, but the efficiency drops at part load, usually quite significantly.

2.3.3 Variable speed control

This solution is applicable to all kinds of compressors and is efficient. A two-speed electric motor or a frequency converter can be used to vary the speed of the compressor. The two-speed electric motor regulates the compressor capacity by running at the high speed when the cooling load is high (e.g. cooling down period) and at the low speed when the cooling load is low (e.g. storage period). The frequency converter can vary the rotation speed continuously to satisfy the actual demand. The frequency converter observes limits for min. and max. speed, temperature and pressure control, protection of compressor motor as well as current and torque limits. Frequency converters offer a low start-up current. Variable speed control usually has little impact on the efficiency of the compressor and is thus a very popular control. In some cases, the range of allowed RPM of the compressor is not enough to cover the desired range of capacities, so often variable speed control is combined with step control.

2.3.4 Hot gas bypass

This solution is applicable to compressors with fixed capacities and more typical for commercial refrigeration. In industrial refrigeration systems it is used as a safety measure to avoid an excessively low suction pressure when there is a sudden drop in cooling load. To control the refrigeration capacity, part of the hot gas flow in the discharge line is bypassed into the low-pressure circuit. This works as a fast response to a sudden drop in cooling load, thus adding extra cooling load to the system when the compressor is ramping down. This generally decreases the efficiency of the system.

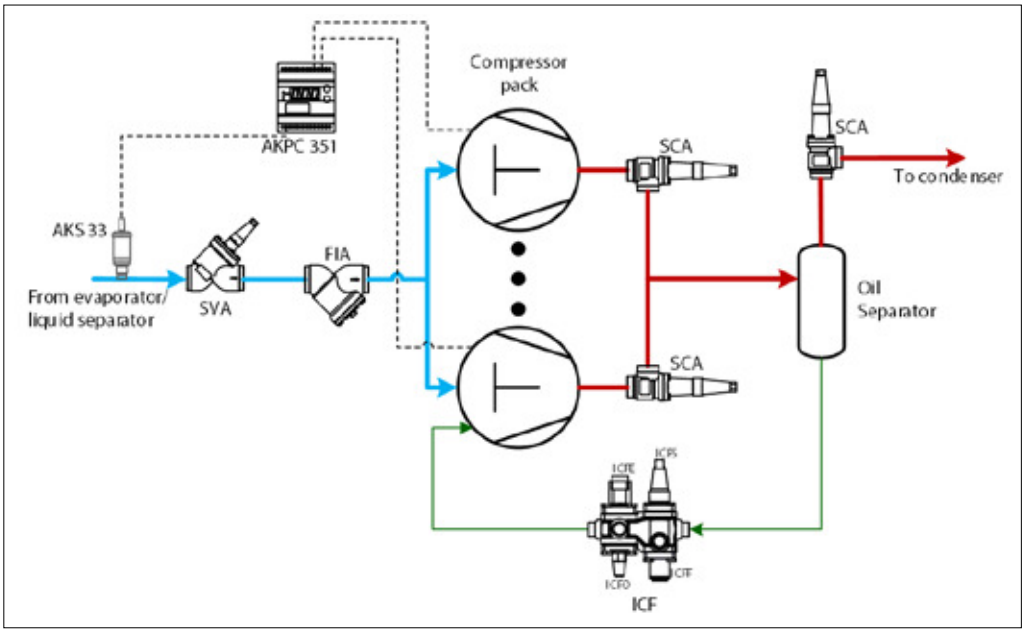

Application example 2.3.1: Step control of compressor capacity

© Danfoss | Climate Solutions | 2022.10

A step control solution for compressor capacity can be achieved by using a step controller, e.g. Danfoss EKC 331. EKC 331 is a four-step controller with up to four relay outputs. It controls the loading/unloading of the compressors/pistons or the electric motor of the compressor according to the suction pressure signal from a pressure transmitter, e.g. Danfoss AKS 33. Based on a neutral zone control, EKC 331 can control a pack system with up to four equally sized compressor steps or, alternatively, two capacity-controlled compressors (each with one unload valve).

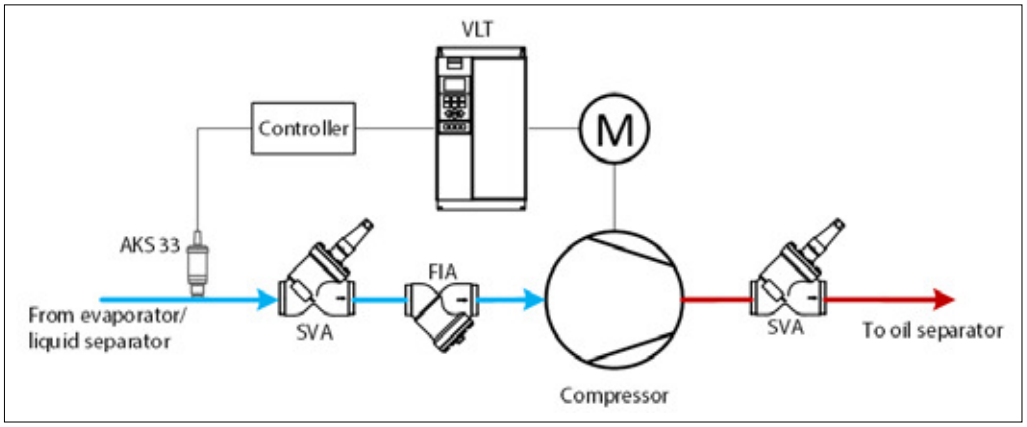

Application example 2.3.2: Variable speed capacity control

The VLT frequency converter is controlled by a controller module that adjusts the control signal to the converter from an input signal from a pressure transmitter, e.g. AKS 33. The controller module can be either a Danfoss AK-CC or a PLC/OEM module. The VLT frequency converter can also receive the signal from the pressure transmitter and work without a separate controller.

Frequency converter control offer the following advantages:

- Energy savings
- Improved control and product quality
- Noise reduction
- Longer lifetime
- Simplified installation
- Easy-to-use complete control of the system

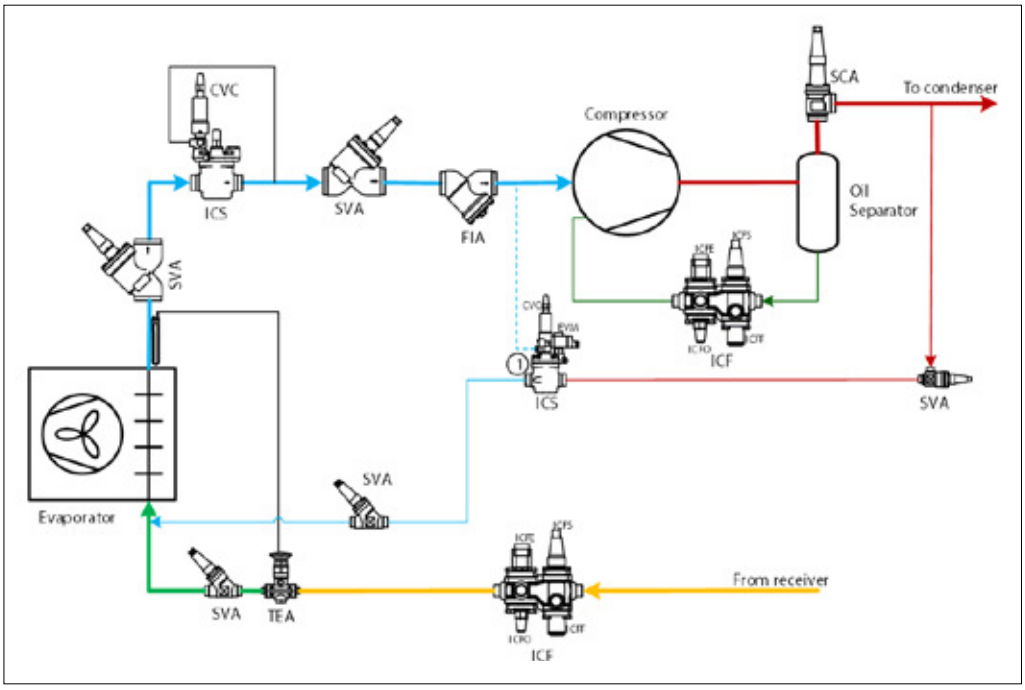

Application example 2.3.3: Hot gas bypass

Hot gas bypass can be used in specific cases to compensate for a suddenly reduced cooling load. Normally in industrial refrigeration plants, the compressors will be speed controlled or step controlled. These controls can, however, be too slow in reacting in cases where there is a sudden drop in cooling load. This sudden drop will initially cause the compressor to decrease the suction pressure. Hot gas bypass can be used as a fast response to a sudden decrease in cooling load, which will prevent the suction pressure from dropping too low. The hot gas is bypassed to the evaporator until the compressor has ramped down to match the reduced cooling load.

Hot gas bypass is energy inefficient and should not be used as a primary solution to 'control' the compressor, but rather as a safety measure to avoid excessively low suction pressure.

The pilot-operated servo valve ICS (1) with a CVC pilot valve is used to control the hot gas bypass flow according to the pressure on the suction line. The CVC is a back-pressure controlled pilot valve which opens the ICS (1) and increases the flow of hot gas when the suction pressure is below the set value. In this way, the suction pressure ahead of the compressor is kept constant, and thus the refrigeration capacity satisfies the actual cooling load.

2.4 Discharge Temperature Control with Liquid Injection

Compressor manufacturers generally recommend limiting the discharge temperature below a certain value to prevent overheating of the compressor and its parts, prolonging their life and preventing the breakdown of oil at high temperatures.

Referring to the log p-h diagram in chapter 1, it can be seen that the discharge temperature may be high when:

- the compressor runs with high pressure differential
- the compressor receives highly superheated suction vapour
- the compressor runs with capacity control by hot gas bypass

There are several ways to reduce the discharge temperature. One way is to install water-cooled heads in reciprocating compressors. Another method is liquid injection, which involves liquid refrigerant from the outlet of the condenser or receiver being injected into the suction line, the intermediate cooler between compressors, or the side port of the screw compressor.

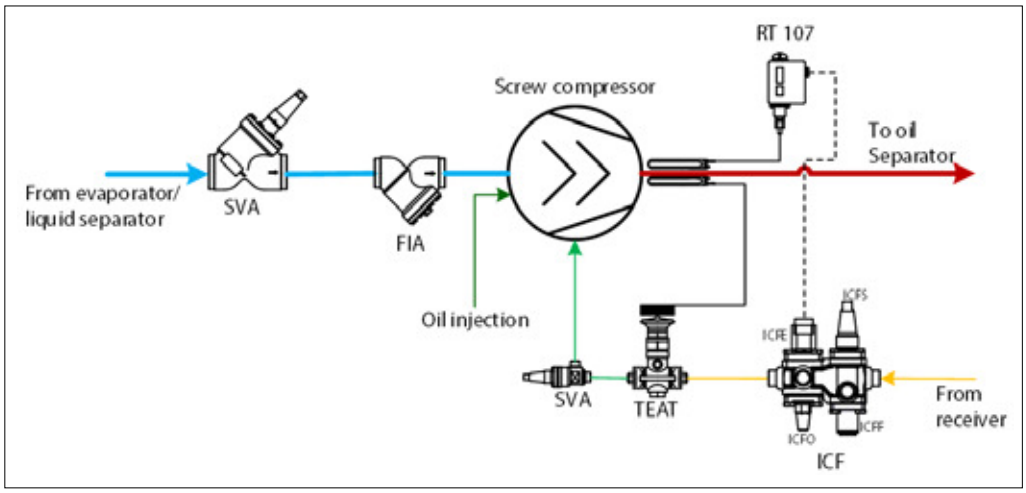

Application example 2.4.1: Liquid injection with thermostatic injection valve

When the discharge temperature rises above the set value of the thermostat RT 107, RT 107 will energize the solenoid valve ICFE which will start liquid injection into the side port of the screw compressor. The thermostatic injection valve (TEAT) controls the injected liquid flow according to the discharge temperature, which prevents the discharge temperature from rising further.

© Danfoss | Climate Solutions | 2022.10

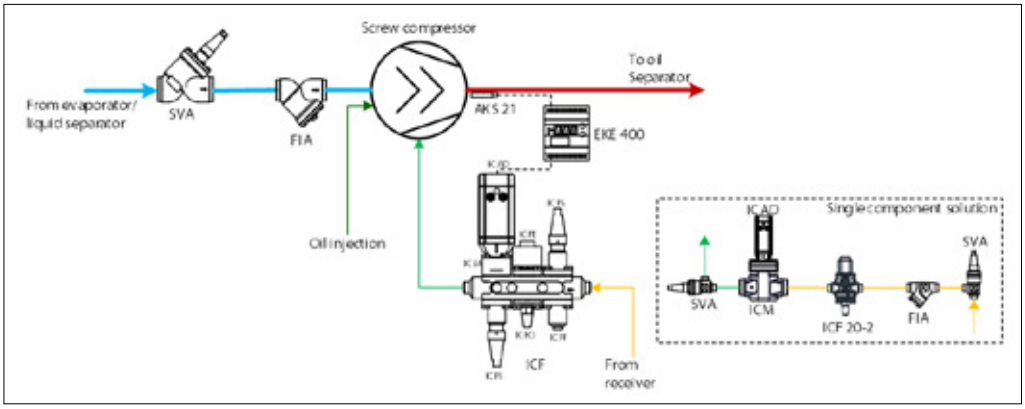

Application example 2.4.2: Liquid injection with motor valve

An electronic solution for liquid injection control can be achieved with the motorized valve ICM. An AKS 21 temperature sensor will register the discharge temperature and transmit the signal to the temperature controller EKC 361.

The EKC 361 controls the ICAD actuator which adjusts the opening degree of the ICM motor valve in order to limit and maintain the required discharge temperature.

2.5 Economizer damper

An economizer is used to increase system capacity and efficiency.

However, pulsations from the compressor are transferred into the economizer line which damages components and leads to valve chattering. The pulsations will lead to increased maintenance costs and downtime if they are not taken care of.

Pulsations need to be dampened to avoid component damage. Correct and well considered dimensioning of economizer lines is necessary to reduce pulsations. The Danfoss Eco-Damper combines three components into a high-impact solution which reduces pulsations significantly and ensures high operational reliability thanks to its solid design. The Danfoss Eco-Damper is based on the Danfoss ICV platform.

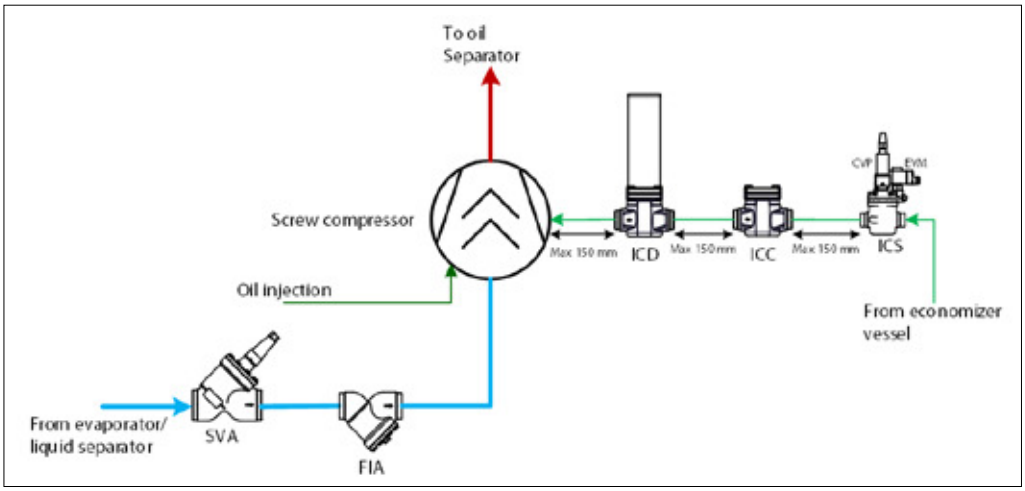

Application example 2.5.1: Economizer line pulsation damping solution

The Danfoss Eco-damper solution consists of 3 components. The Eco-damper (ICD), the Eco-check valve (ICC) and a standard control valve, e.g. an ICS servo valve with CVP, constant pressure pilot valve, and the EVM solenoid valve. The combination shown in the application example can dampen the pulsations by up to 80% and prevent premature failure of economizer components and reduce system downtime. The Eco-damper solution unit has a unique broadband damping effect in the 100-500 Hz working range.

Support on pipe segments is essential to reduce the pulsations and thus reduce vibrations induced by the pulsations. Therefore, each pipe segment between the components in the Eco-damper solution must be fixed to a pipe support element which can absorb the pulsations. The tube on the Eco-damper (ICD) must also be fixed to a pipe support element that can absorb the pulsations.

The ICD Eco-damper comes with an integrated strainer, and is applicable for ammonia systems, along with R134a and R407C systems.

The ICC Eco-check valve has a solid design and is fully opening at low differential pressure to prevent oscillating movements. The ICC Eco-check valve is applicable for ammonia, CO_2 and HFC systems.

For less severe or occasional pulsation issues, the robust Eco-check valve (ICC) and the control valve can be used without an Eco-damper (ICD). **Note! In this case, the pulsations from the compressor eco-port will not be damped.**

It is recommended to have a maximum pipe length of 150 mm (6in) between the individual components and between the ICD and the economizer port in the compressor.

2.6 Summary

Solution		Application	Benefit	Limitations
Reverse Flow Control – see section 0				
Reverse flow control with SCA		Applicable to all refrigeration plants.	Simple. Easy to install. Low flow resistance.	Causes constant pressure drop in the discharge line.
Crankcase Pressure Control – see section 2.2				
Crankcase pressure control with ICS and CVC	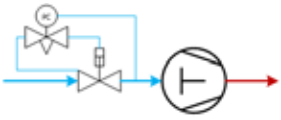	Applicable to reciprocating compressors, normally used for small and medium systems.	Simple and reliable. Effective in protecting reciprocating compressors on start-up or after hot gas defrost.	Causes constant pressure drop in the suction line.
Compressor Capacity Control – see section 2.3				
Step control of compressor capacity with EKC 331 and AKS 33	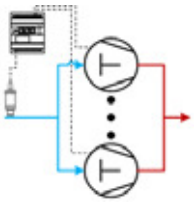	Applicable to multi-cylinder compressor, screw compressor with multiple suction ports, and systems with several compressors running in parallel.	Simple. Almost as efficient at part load as at full load.	The control is not continuous, especially when there are only a few steps. Fluctuations in the suction pressure.
Compressor variable speed capacity control	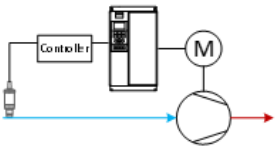	Applicable to all compressors with the ability to run at reduced speed.	Low start-up current. Energy savings. Lower noise. Longer lifetime. Simplified installation.	Compressor must be suited for reduced speed operation.
Hot gas bypass using ICS and CVC	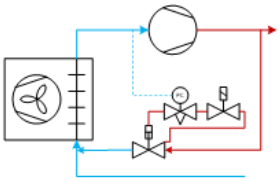	Applicable to compressors with fixed capacities. Used as safety measure against excessively low suction pressure.	Fast response to sudden drops in cooling load. The hot gas can help the oil return from the evaporator.	Should not be used as primary compressor capacity control. Energy inefficient.
Discharge Temperature Control with Liquid Injection – see section 0				
Mechanical solution for liquid injection with TEAT	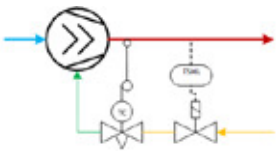	Applicable to systems where the discharge temperatures may run too high.	Simple and effective.	Injection of liquid refrigerant may be dangerous to the compressor. Not as efficient as intermediate cooler.
Electronic solution for liquid injection control with EKC 361 and ICM/ICF	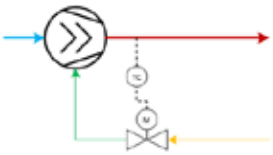	Applicable to systems where the discharge temperatures may run too high.	Flexible and compact. Possible to monitor and control remotely.	Not applicable to flammable refrigerants. Injection of liquid refrigerant may be dangerous to the compressor. Not as efficient as intermediate cooler.

© Danfoss | Climate Solutions | 2022.10

3. Condenser controls

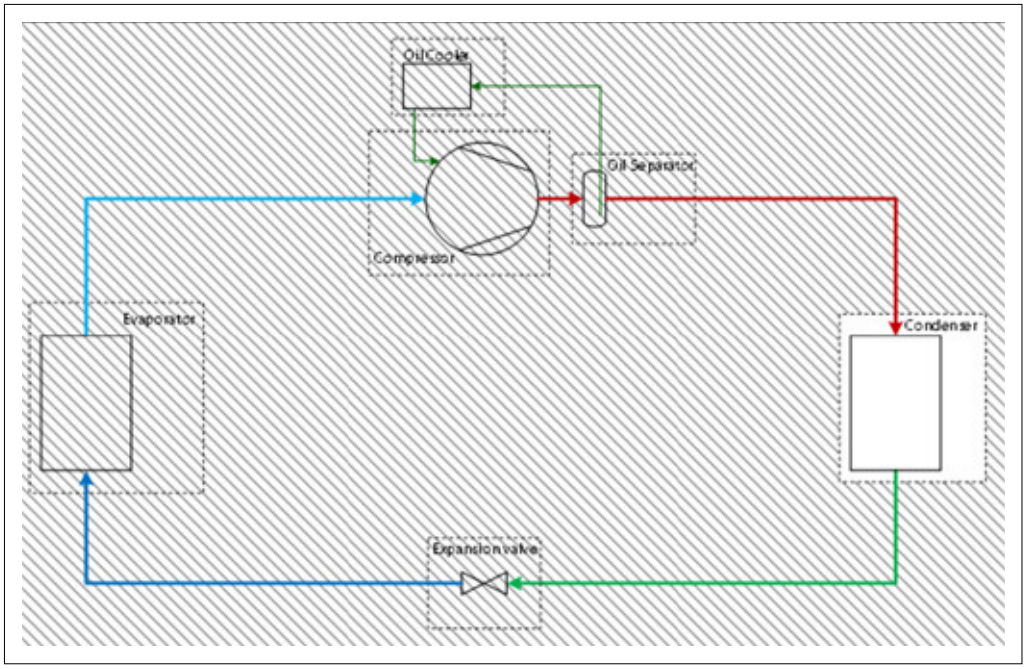

In areas where there are large variations in ambient air temperatures and/or load conditions, it is necessary to control the condensing pressure to prevent it from falling too low. Excessively low condensing pressures result in there being insufficient pressure differential across the expansion device and the evaporator not being supplied with enough refrigerant. It means that condenser capacity control is mainly used in the temperate climate zones and to a lesser degree in subtropical and tropical zones.

The basic idea of condensing capacity control is to control the condenser capacity when the ambient temperature is low, so that the condensing pressure is maintained above the minimum acceptable level and to keep the condensing pressure as low as possible for optimal efficiency. This condensing capacity control is achieved either by regulating the flow of circulating air or water through the condenser, or by reducing the effective heat exchanger surface area.

Different solutions can be designed for different types of condensers:

- Air cooled condensers
- Evaporative condensers
- Water cooled condensers

Condenser installation depends on the way injection to the low-pressure side of the refrigeration system is controlled. Note that the terms 'high-pressure float valve operation' and 'low-pressure float valve operation' refer to the mode of operation, not specifically the use of a float valve. Both operation modes can be achieved by using level switches/ transmitters and a normal expansion valve.

3.1 High-pressure float valve operation

High-pressure float valve operation is expansion of the liquid immediately after the condenser. Any variation in the charge volume due to variations in capacity must be handled at the low-pressure side, e.g. in a liquid separator. Since the flow after the expansion valve is two-phase, it is not suitable for distribution to more than one location and thus it is primarily used in systems with only one low-pressure separator, such as a chiller unit.

High-pressure float valves are usually mounted immediately after the condenser and, as such, pose no special problems with regard to condenser installation.

3.2 Low-pressure float valve operation

Low-pressure float valve operation controls the expansion of the condensed liquid to keep a given level in one or more low-pressure separators. Any variation of the charge volume due to variations in capacity must be handled on the high-pressure side, e.g. in a receiver.

To ensure proper functioning of a condenser in a low-pressure float valve system, the installation must be correct.

3.3 Air-cooled condensers

An air-cooled condenser consists of tubes mounted within a fin block. The condenser can be horizontal, vertical or V-shaped. The ambient air is drawn across the heat exchanger surface with axial or centrifugal fans.

Air-cooled condensers are used on industrial refrigeration systems where the relative air humidity is high. Air-cooled condenser application examples are depicted below as low-pressure float valve operation.

Controlling the condensing pressure for air-cooled condensers can be achieved in the following ways: Step control of air-cooled condensers.

3.3.1 This method utilizes a step controller to control the air flow in the air-cooled condenser by switching the fans on or off according to a condensing pressure signal

A pressure transmitter, e.g. Danfoss AKS 33, measures the condensing pressure and sends a signal to a step controller, e.g. Danfoss EKC 331, which controls the switching of the fans according to the pressure signal.

3.3.2 Fan speed control of air-cooled condensers

3.3.3 This method of condenser fan control is mainly used when a reduction in noise level is desired due to environmental concerns

For this type of installation, Danfoss frequency converter VLT can be used.

3.3.4 Area control of air-cooled condensers

3.3.5 For area control of air-cooled condensers, a receiver is required. This receiver must have sufficient volume to be able to accommodate the variations in the amount of refrigerant in the condenserThere are two ways this condenser area control can be done:

The main valve ICS combined with the constant pressure pilot CVP-H (high-pressure) mounted in the discharge line on the inlet side to the condenser and ICS combined with a differential pressure pilot CVPP mounted in the pressure equalization line between the discharge line and the receiver. In the pipe between the condenser and the receiver, a stop-check valve SCA is mounted to prevent liquid migration from the receiver to the condenser.

Main valve ICS combined with the constant pressure pilot CVP-H mounted in the pipe between the condenser and the receiver and an ICS combined with a differential pressure pilot CVPP mounted in the pressure equalization line between the discharge line and the receiver. This method is mainly used in commercial refrigeration.

© Danfoss | Climate Solutions | 2022.10

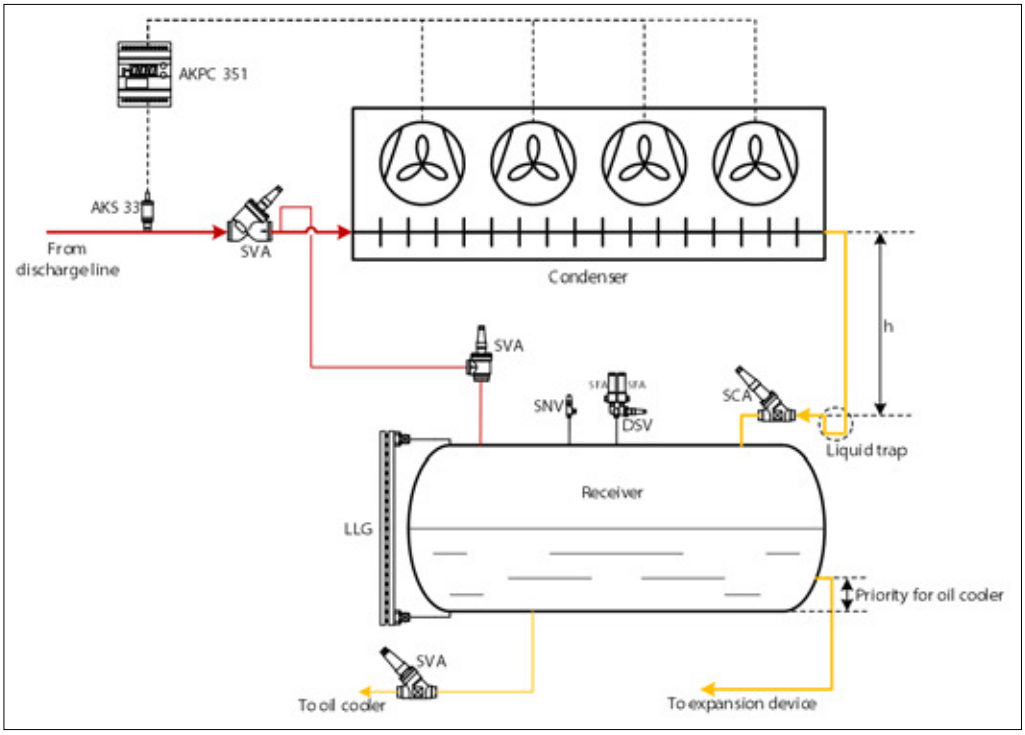

Application Example 3.3.1: Air flow control of air-cooled condenser with step controller EKC 331

EKC 331 is a four-step controller with up to four relay outputs. It controls the switching of the fans according to the condensing pressure signal from a pressure transmitter AKS 33.

Based on neutral zone control, EKC 331 can control the condensing capacity so that the condensing pressure is maintained above the required minimum level.

The bypass pipe (thin red line) where SVA is installed is an equalizing pipe, which helps balance the pressure in the receiver with the inlet pressure of the condenser so that the liquid refrigerant in the condenser can be drained into the receiver.

It is important to account for the pressure drop in the condenser when designing the piping from the condenser to the receiver. The pressure at the outlet of the condenser can be lower than the pressure in the receiver, which will restrict the flow to the receiver. Using a drop leg between the condenser and receiver with a liquid trap at the bottom will allow the build-up of liquid in the drop leg. The liquid column in the drop leg will provide a positive pressure to counter the pressure drop in the condenser. The height of the drop leg must be larger than the pressure loss in the condenser, expressed in metres of liquid.

In some installations, EKC 331T is used. In this case, the input signal could be from a PT 1000 temperature sensor, e.g. AKS 21. The temperature sensor is usually installed in the outlet of the condenser.

Note! The EKC 331T + PT1000 temperature sensor solution is not as accurate as the EKC 331 + pressure transmitter solution, because the condenser outlet temperature may not entirely reflect the actual condensing pressure due to the liquid subcooling or the presence of incondensable gasses in the refrigeration system. If the subcooling is too low, flash gas may occur when the fans start.

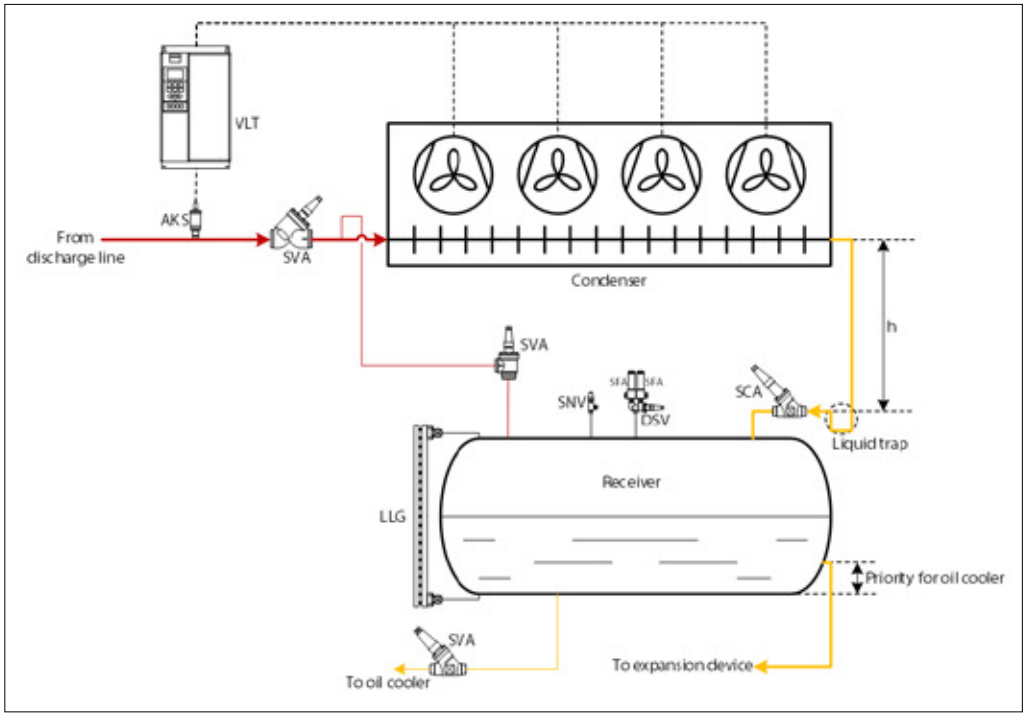

Application Example 3.3.2: Fan speed control of air-cooled condenser

The VLT frequency converter is controlled by the condensing pressure signal from a pressure transmitter, e.g. Danfoss AKS 33, on the discharge line. The VLT frequency converter adjusts the speed of the fans in the air-cooled condenser according to the signal from the pressure transmitter.

Frequency converter control offers the following advantages:

- Energy savings
- Improved control and product quality
- Noise reduction
- Longer lifetime
- Simplified installation
- Easy-to-use complete control of the system

It is important to account for the pressure drop in the condenser when designing the piping from the condenser to the receiver. The pressure at the outlet of the condenser can be lower than the pressure in the receiver, which will restrict the flow to the receiver. Using a drop leg between the condenser and receiver, with a liquid trap at the bottom, will allow the build-up of liquid in the drop leg. The liquid column in the drop leg will provide a positive pressure to counter the pressure drop in the condenser. The height of the drop leg must be greater than the pressure loss in the condenser, expressed in metres of liquid.

© Danfoss | Climate Solutions | 2022.10

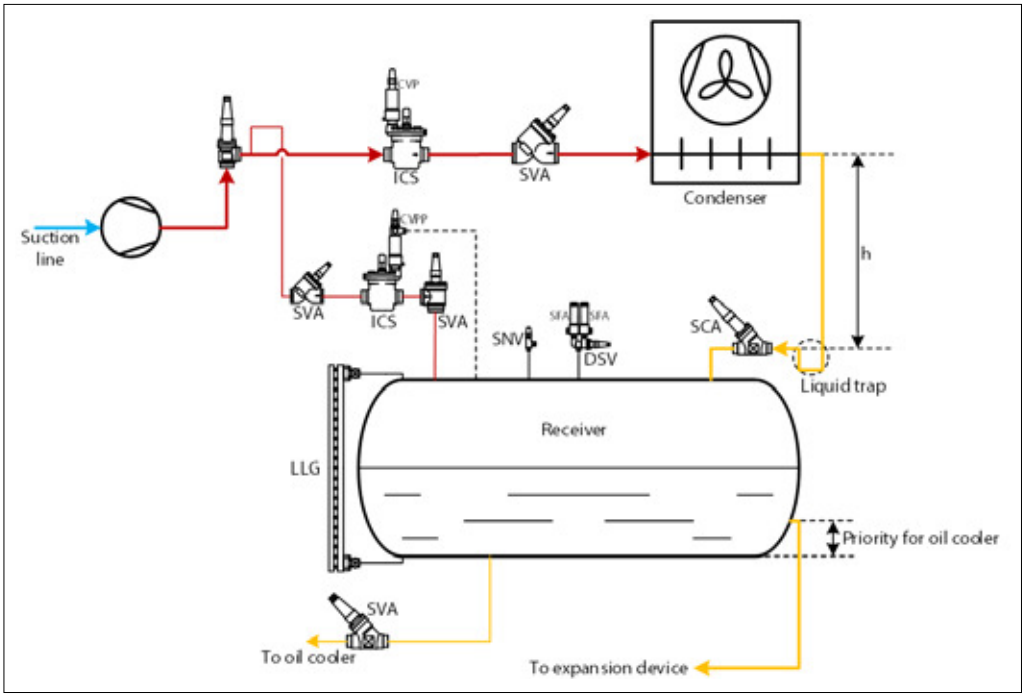

Application Example 3.3.3: Area control of air-cooled condenser (for cold climates)

This regulating solution maintains the pressure in the receiver at a sufficiently high level during low ambient temperatures.

The ICS pilot-operated servo valve in the discharge line opens when the discharge pressure reaches the set pressure on the CVP pilot valve and closes when the pressure drops below the set pressure of the CVP pilot valve.

The ICS pilot-operated servo valve with the CVPP constant differential pressure pilot in the pressure equalization line (thin red line) maintains sufficient pressure in the receiver.

The SCA stop-check valve ensures increased condenser pressure by liquid back-up within the condenser. This requires a sufficiently large receiver. The SCA stop-check valve also prevents liquid flow from the receiver back into the condenser when the latter is colder during compressor shut-down periods.

It is important to account for the pressure drop in the condenser when designing the piping from the condenser to the receiver. The pressure at the outlet of the condenser can be lower than the pressure in the receiver, which will restrict the flow to the receiver. Using a drop leg between the condenser and receiver, with a liquid trap at the bottom, will allow the build-up of liquid in the drop leg. The liquid column in the drop leg will provide a positive pressure to counter the pressure drop in the condenser. The height of the drop leg must be greater than the pressure loss in the condenser, expressed in metres of liquid.

3.4 Evaporative condensers

An evaporative condenser is a condenser cooled by ambient air combined with water sprayed through orifices and air baffles in counterflow with the air. The water evaporates, and the evaporation effect of the water drops adds considerably to the condenser capacity, as the air is cooled to the 'wet bulb' temperature.

Today's evaporative condensers are enclosed in a steel or plastic enclosure with axial or centrifugal fans at the bottom or at the top of the condenser.

The heat exchanger surface in the wet air stream consists of steel pipes.

Above the water spray orifices (in the dry air) it is common to have a de-superheater made of steel pipes with fins to reduce the discharge gas temperature before it reaches the heat exchanger in the wet air stream. In this way, the build-up of limescale on the surface of the main heat exchanger pipes is reduced.

This type reduces the water consumption considerably compared to a normal water-cooled condenser. Capacity control of an evaporative condenser can be achieved by either a two-speed fan or variable speed control of the fan and, at very low ambient temperature conditions, switching off the water circulation pump.

The use of evaporative condensers is limited in areas with high relative humidity. In cold surroundings (ambient temperatures < 0 °C (32 °F)), frost damage prevention must be carried out by removing the water in the evaporative condenser.

The applications shown in this section are depicted as low-pressure float valve operated.

3.4.1 Control of evaporative condensers

Controlling the evaporative condensers' condensing pressure or the condenser capacity can be achieved in different ways:

- RT or KP pressure controls for fan and water pump control.
- RT-L neutral zone pressure control for fan and water pump control.
- Step controller for controlling two-speed fans and the water pump.
- Frequency converters for fan speed control and water pump control.
- Saginomiya flow-switch for alarm if water circulation fails.

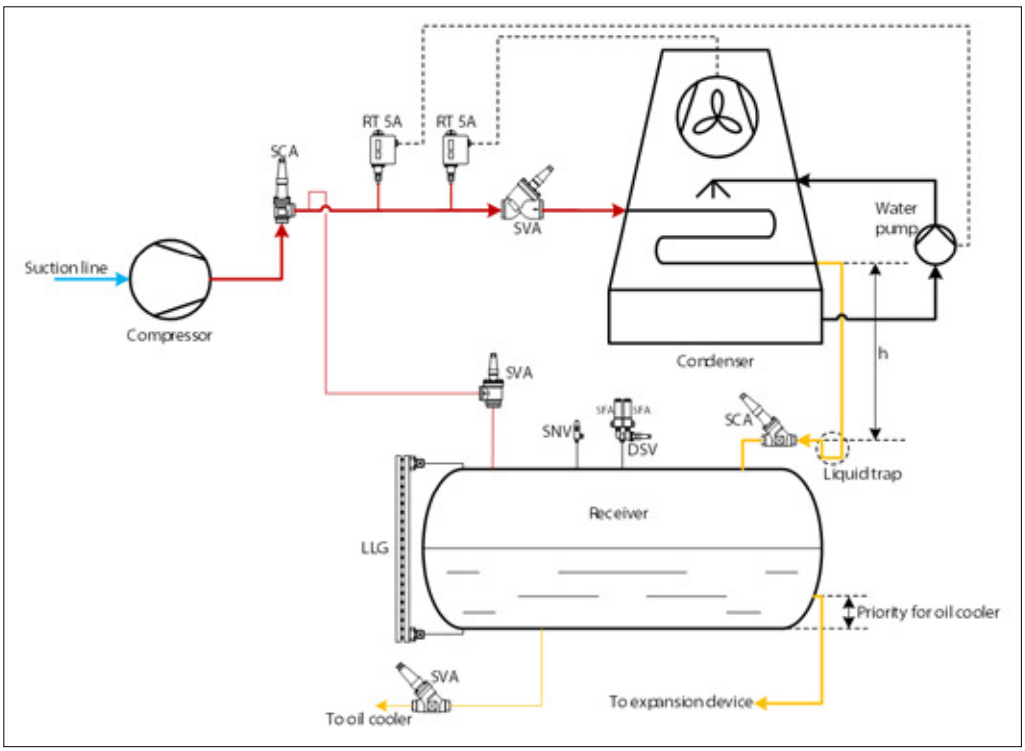

Application Example 3.4.1: Step control of evaporative condenser with pressure controller RT

This solution maintains the condensing pressure, as well as the pressure in the receiver at a sufficiently high level in low ambient temperatures.

When the inlet pressure of the condenser drops below the setting of the pressure controller RT 5A, the controller will switch off the fan to decrease the condensing capacity.

In extremely low ambient temperatures, when the condensing pressure drops below the setting of RT 5A after all the fans have been switched off, RT 5A will stop the water pump.

When the pump is stopped, the condenser and the water pipes should be drained to avoid scaling and freezing.

© Danfoss | Climate Solutions | 2022.10

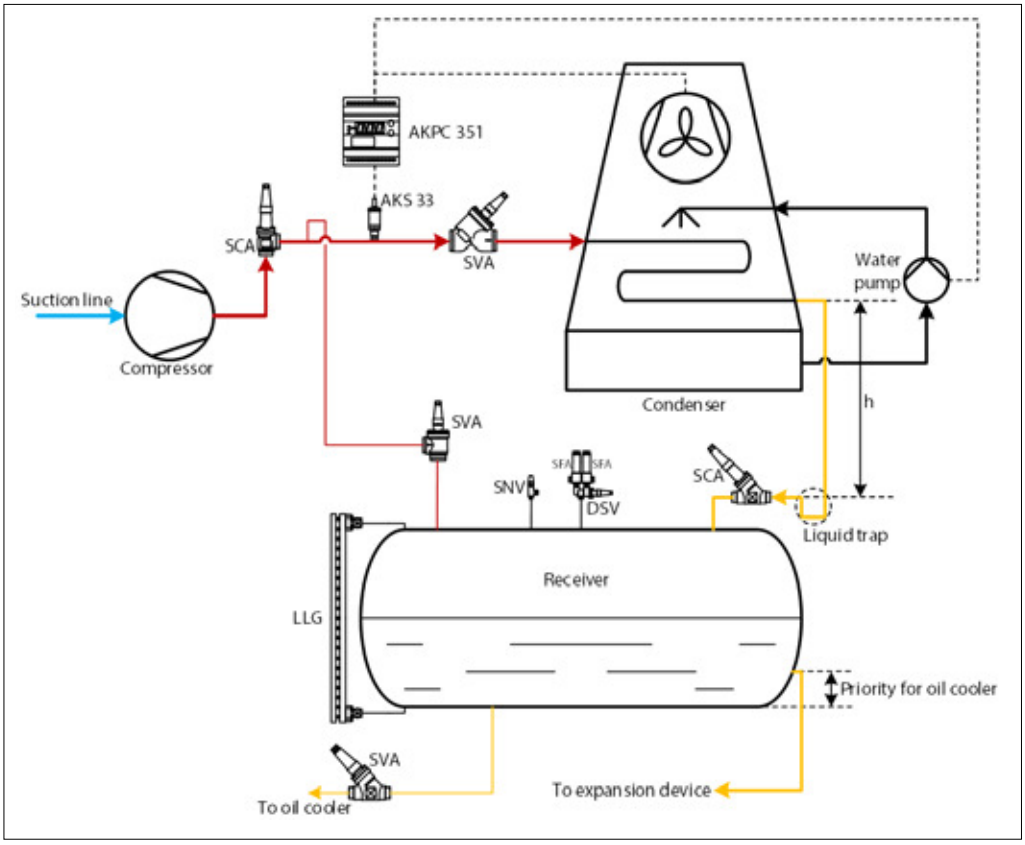

Application Example 3.4.2: Step control of evaporative condenser with step controller EKC 331

This solution works in the same way as Application Example 3.4.1, but operated via step controller EKC 331.

A capacity regulation solution for evaporative condensers can be achieved by using an EKC 331 power regulator and an AKS 33 pressure transmitter. Sequential control for the water pump must be selected as the last step. Sequential control means that the steps will always cut in and out in the same order.

EKC 331T version can accept a signal from a PT 1000 temperature sensor, which may be necessary for secondary systems.

Alternatively, a frequency converter can control the condensing pressure by controlling the fan RPM, possibly with a step function on individual fans, as in the air cooled condenser version, with an RT 5A cutting out the pump at low condensing temperatures.

3.5 Water-cooled condensers

In the past, the water-cooled condenser was typically a shell and tube heat exchanger, but today it is very often a plate heat exchanger in a modern design.

Water-cooled condensers with open water loops are not commonly used, because in many places it is not permitted to use the large amount of water these types consume (water shortage and/or high prices for water). However, such restrictions usually do not apply in maritime applications.

Today, water-cooled condensers are popular in chillers, with the cooling water cooled by a cooling tower and re-circulated. It can also be used as a heat recovery condenser to supply hot water.

Control of the condensing pressure can be achieved using a pressure-controlled water valve, or a motorized water valve controlled by an electronic controller to control the flow of the cooling water according to the condensing pressure.

The applications shown in the following section are depicted as high-pressure float valve operation. Thus, no receiver is shown in the following applications.

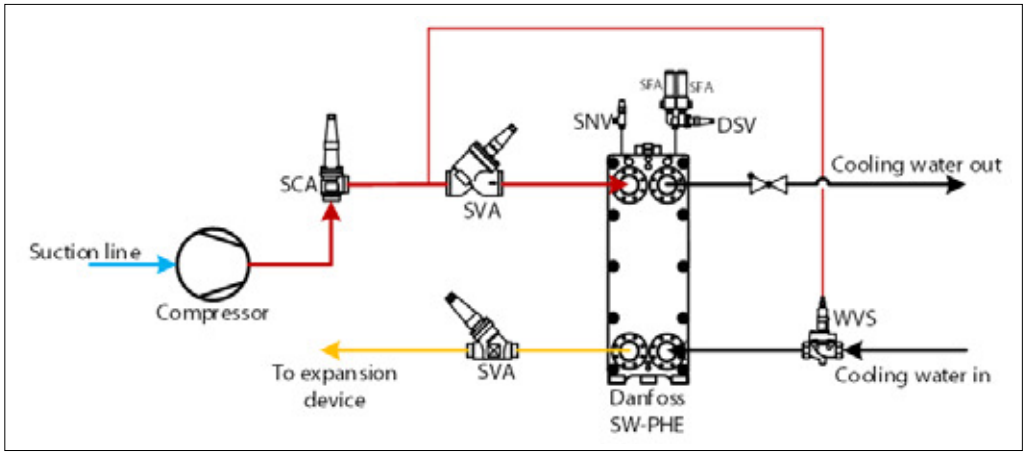

Application Example 3.5.1: Water flow control of water-cooled condensers with a water valve

This solution maintains the condensing pressure at a constant level. The refrigerant condensing pressure is directed through a capillary tube to the top of the water valve WVS and adjusts the opening of WVS accordingly. The water valve (WVS) is a P-regulator.

The condenser is shown as a Danfoss semi-welded plate heat exchanger.

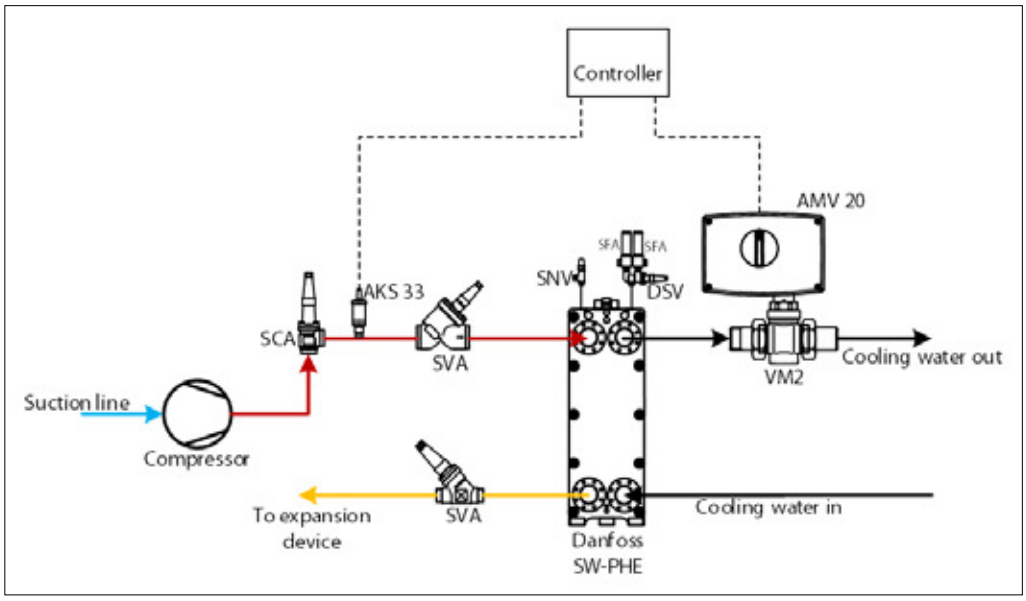

Application Example 3.5.2: Water flow control of water-cooled condenser with a motor valve

The controller receives the condensing pressure signal from the pressure transmitter AKS 33 and sends out a corresponding modulating signal to actuator AMV 20 of the motor valve VM 2. In this way, the flow of cooling water is adjusted, and the condensing pressure is kept constant.

In this solution, PI or PID control can be configured in the controller.

VM 2 and VFG 2 are motor valves designed for district heating and can also be used for water flow control in refrigeration plants.

Alternatively, an AB-QM pressure-independent balancing and control valve can be used. The AB-QM valve consists of 2 functions: a differential pressure controller and a control valve. The differential pressure controller maintains a constant differential pressure across the control valve, while the control valve adjusts the flow through the valve.

© Danfoss | Climate Solutions | 2022.10

3.6 Summary

Solution		Application	Benefit	Limitations
Air-cooled condensers – see section 0				
Step control of fans with step controller EKC 331	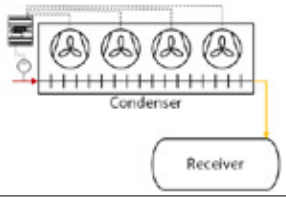	Used mainly in industrial refrigeration in hot climates and to a lesser extent in colder climates.	Control of air volume flow in steps. No use of water.	Very low ambient temperatures. Fan step control can be noisy.
Fan speed control of air-cooled condensers	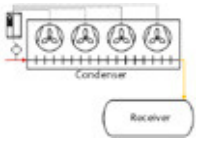	Applicable to all condensers with the ability to run at reduced speed.	Simple. Almost as efficient at part load as at full load.	Low start-up current Energy savings Lower noise Longer lifetime Simplified installation.
Evaporative condensers– see section 3.4				
Step control of evaporative condenser with pressure controller RT	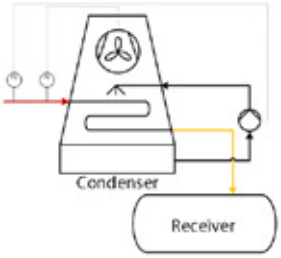	Industrial refrigeration with very large capacity requirement.	Large reduction in water consumption compared to water-cooled condensers and relatively easy to capacity control.	Not applicable in countries with high relative humidity. In cold climates, special precautions must be taken to ensure the water pipe is drained of water during pump off-periods.
Step control of evaporative condensers with step controller EKC 331	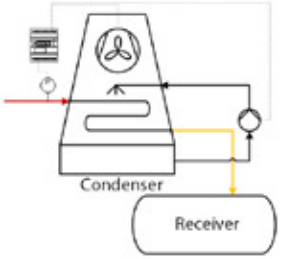	Industrial refrigeration with very large capacity requirement.	Large reduction in water consumption compared to water-cooled condensers and relatively easy to capacity control.	Not applicable in countries with high relative humidity. In cold climates, special precautions must be taken to ensure the water pipe is drained of water during pump off-periods.
Water-cooled condensers– see section 3.5				
Liquid flow control with a water valve	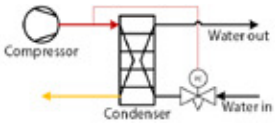	Chillers, heat recovery condensers.	It is easy to capacity control.	Not applicable when availability is a problem.
Liquid flow control with a motor valve	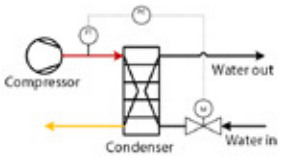	Chillers, heat recovery condensers.	It is easy to capacity control the condenser and the heat recovery. Possible to control remotely.	This type of installation is more expensive than a normal set up. Not applicable when water availability is a problem.

4. Liquid level regulation

Liquid level regulation is an important element in the design of industrial refrigeration systems. It controls the liquid injection to maintain a constant liquid level.

Two main different principles may be used when designing a liquid level regulation system:

- High-pressure liquid level regulation system (HP LLRS)
- Low-pressure liquid level regulation system (LP LLRS)

Both principles can be achieved using mechanical and electronic components. Float valves offer a simple control, but as the float valve needs to be mounted in the desired level, a change necessitates a physical relocation of the valve. Systems employing a level transmitter are more complex but enable an easy level change.

High-pressure liquid level regulation systems are typically characterized by:

- The sensing device (sensor/float) is placed on the high-pressure side of the system
- An increase in liquid level will open the expansion device and pass high-pressure liquid to the low-pressure side of the system, e.g. the regulation attempts to keep the high-pressure side level constant
- Critical refrigerant charge
- Small HP receiver or even no HP receiver
- Mainly applied where the HP liquid is distributed to only one low-pressure application
- Variations in refrigerant volume must be accommodated on the low-pressure side

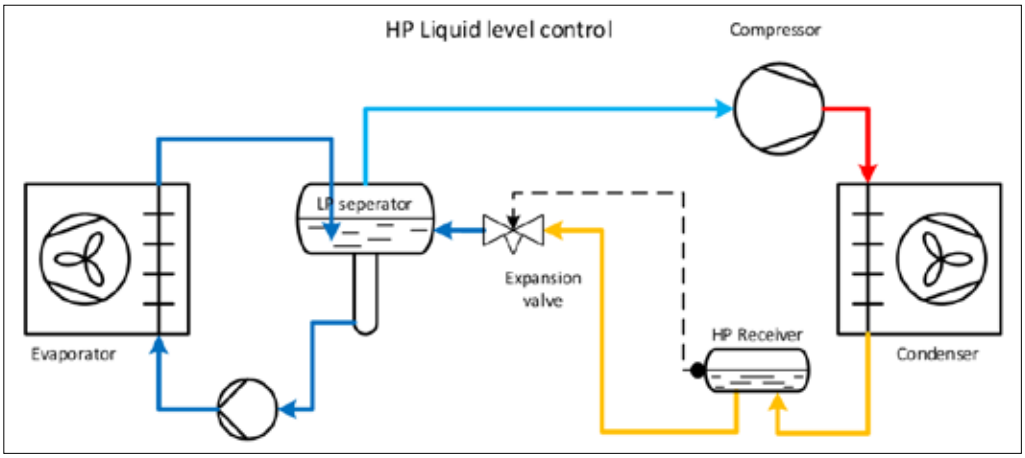

Figure 4.1: HP liquid level regulation diagram

Low-pressure liquid level regulation systems are typically characterized by:

- The sensing device (sensor/float) is placed on the low-pressure side of the system
- A decrease in liquid level will open the expansion device and pass high-pressure liquid to the low-pressure side of the system
- Receiver is generally large in size
- (Fairly) large charge of refrigerant
- Mainly applied to decentralized systems where there can be several low-pressure applications
- Variations in refrigerant volume must be accommodated on the high-pressure side

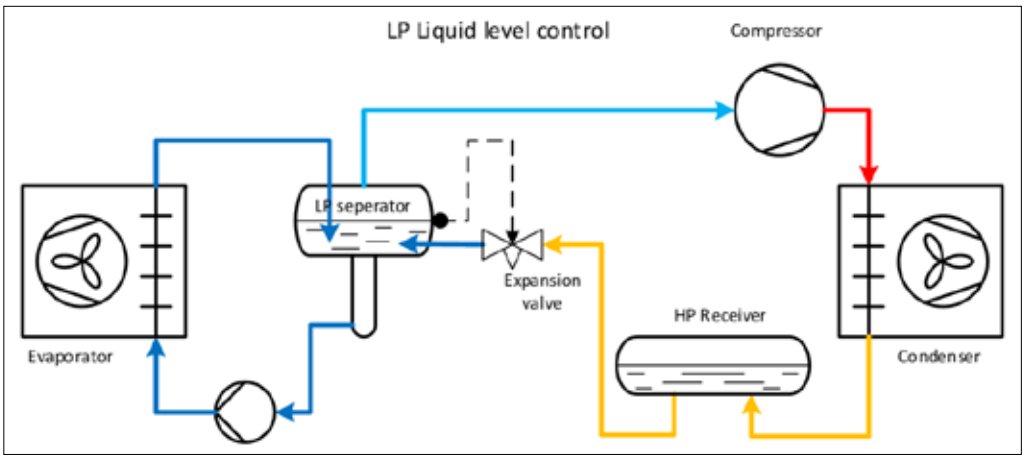

Figure 4.2: LP liquid level regulation diagram

In conclusion, HP LLRS are suitable for compact systems like chillers; the advantage is the reduced cost (small receiver or no receiver). Whereas LP LLRS are very suitable for decentralised systems with more than one LP separator and long piping, for instance a large cold storage; the advantage being the increased safety and reliability.

© Danfoss | Climate Solutions | 2022.10

4.1 High-pressure liquid level regulation system (HP LLRS)

When designing a HP LLRS, the following points must be taken into consideration:

As soon as liquid is 'formed' in the condenser/condenser outlet, the liquid is fed to the low-pressure side (the evaporator).

The liquid leaving the condenser will have little or no sub-cooling. This is important to consider when the liquid flows to the low-pressure side. If there is pressure loss in the piping or the components, flash-gas may occur and cause the capacity of the expansion device to be reduced.

If it is a critical charged system, the refrigerant charge must be precisely calculated in order to ensure that there is adequate refrigerant in the system. An overcharge increases the risk of flooding the evaporator or the liquid separator, causing liquid carryover into the compressor, as well as liquid hammering. If the system is undercharged, the evaporator will be starved. The size of the low-pressure vessel (liquid separator/evaporator) must be carefully designed so that it can accommodate the refrigerant in all conditions without causing liquid carryover.

For the reasons mentioned above, HP LLRS are especially suitable for systems that require a small refrigerant charge, such as chiller units or small freezers. Liquid chiller units usually do not need receivers, however, if a receiver is necessary in order to install a liquid sensing device and/or provide refrigerant to an oil cooler, the receiver (priority vessel) could be physically small.

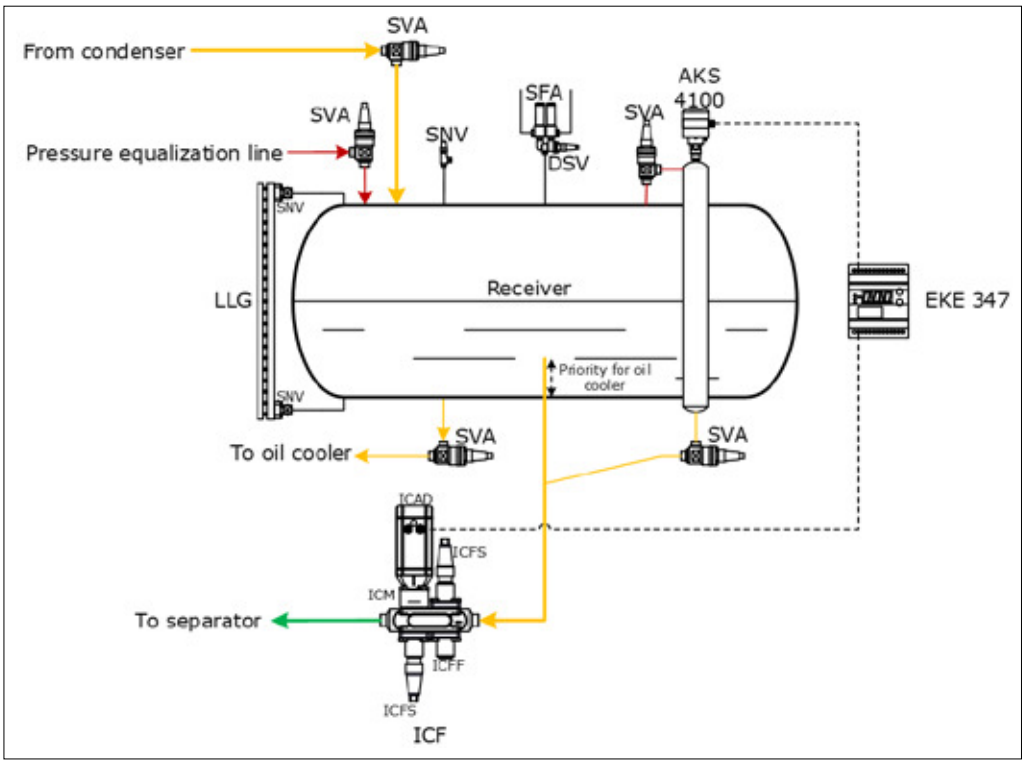

Application Example 4.1.1: Electronic solution for HP liquid level regulation

The system illustrated is an AKS 4100/4100U level transmitter which sends a level signal to an EKE 347 liquid level controller. The ICM motor valve acts as an expansion valve.

When designing an electronic LLRS solution, the liquid level signal can be given either by an LLS 4000, which is a level switch (ON/OFF), or an AKS 4100/4100U, which is a level transmitter (4-20 mA).

The electronic signal is sent to an EKE 347 electronic controller which controls the injection valve.

The liquid injection can be regulated in several different ways:

With a modulating motor valve type ICM with an ICAD actuator (as shown in the application example above).

With a pulse-width-modulating expansion valve type AKVA. The ICFA (in an ICF valve station)/AKVA valve should be used only where the pulsation from the valve is acceptable. Line size should be sized to the full capacity of the ICFA/AKVA valve.

With a regulating valve REG acting as an expansion valve and an ICS/ICF 20-2 solenoid valve to implement ON/OFF regulation.

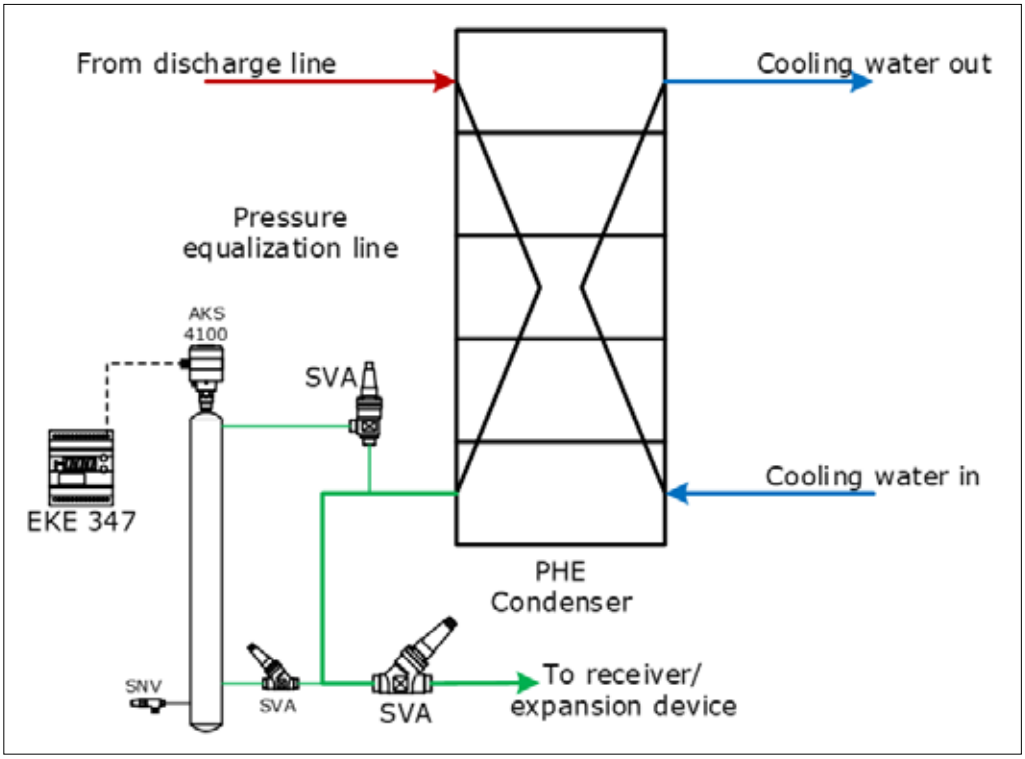

Application Example 4.1.2: Electronic solution for HP liquid level regulation with small/no HP receiver. Same principle for other evaporative condensers or other condenser types

In this example, the expansion valve which should be connected to the liquid level controller, EKE 347, is not shown.

The system illustrated is an AKS 4100/4100U level transmitter which sends a level signal to an EKE 347 liquid level controller.

When designing an electronic LLRS solution, the liquid level signal can be given either by an LLS 4000, which is a level switch (ON/OFF), or an AKS 4100/4100U, which is a level transmitter (4-20 mA).

The electronic signal is sent to an EKE 347 electronic controller which controls the injection valve.

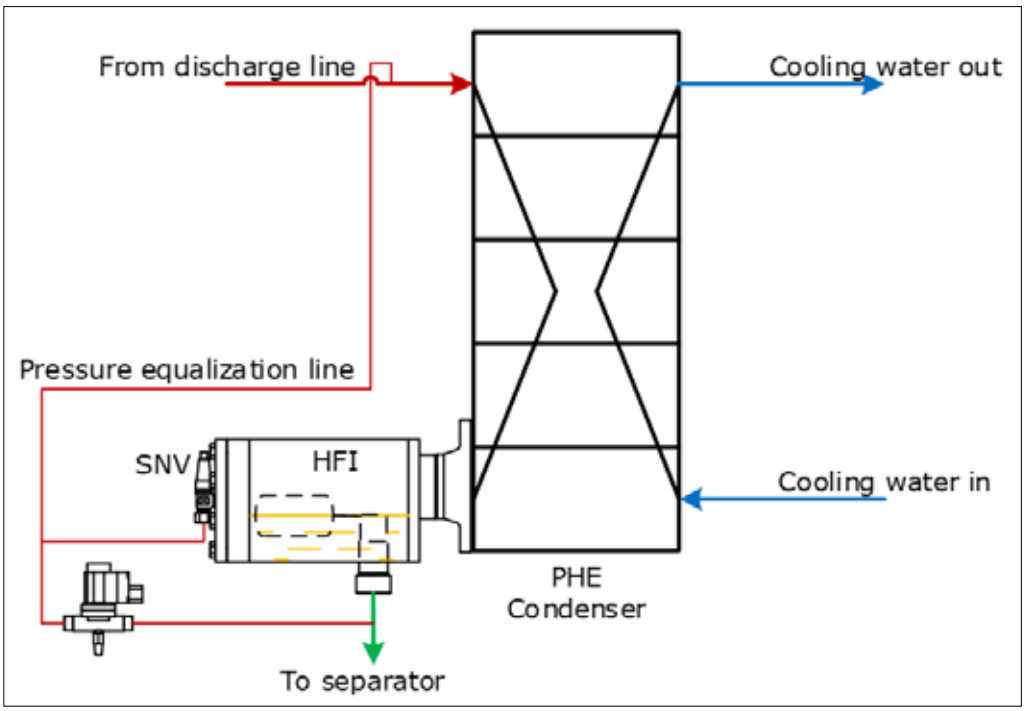

Application Example 4.1.3: Mechanical solution for HP liquid level regulation with HFI

© Danfoss | Climate Solutions | 2022.10

The HFI is a direct-acting high-pressure float valve; therefore, no differential pressure is required to activate the valve.

If the condenser is a plate heat exchanger, the mechanical float valve HFI can be mounted directly on the heat exchanger header plate.

It may be necessary to connect an equalization line to either the HP or LP side to remove refrigerant vapour from the float housing, as this may prevent the liquid from entering the float housing and thereby prevent the HFI valve from opening.

During standstill of the plant system, the pressure will slowly equalize, allowing the entire refrigerant charge to transfer to the coldest part of the system. (During wintertime, this can be the condenser).

If pressure equalization is not desired, a solenoid valve and/or check valve must be fitted.

If the HFI is not mounted directly on the PHE/condensers:

To enable any liquid condensate to flow to the HFI by gravity, the HFI must be installed underneath the condenser.

To ensure trouble-free operation, in most cases a bypass orifice must be installed.

The by-pass orifice connects the gas space in the HFI housing with the outlet connection of the HFI.

Due to the pressure difference between the high- and low-pressure side, the gas is drawn to the low-pressure side, resulting in a slight underpressure in the housing.

This effect allows gas/vapour to be drawn off. In addition, this allows the small amount of flash gas that can form in the liquid feed line or during plant standstill to be bled away.

If the HFI is installed close to the condenser and the pipe design allows vapour/gas to return freely and easily to the condenser, then the bypass orifice might not be needed/ need to be in operation.

We generally recommend installing/preparing the bypass orifice.

Guidelines for size of by-pass orifice:

Approx. Size of by-pass orifice		
HFI	Ø / mm	Ø / in
HFI 040	1.0 to 1.5	0.04 to 0.06
HFI 050	1.5	0.06
HFI 060	2.0 to 3.0	0.08 to 0.12
HFI 070	4.0	0.16

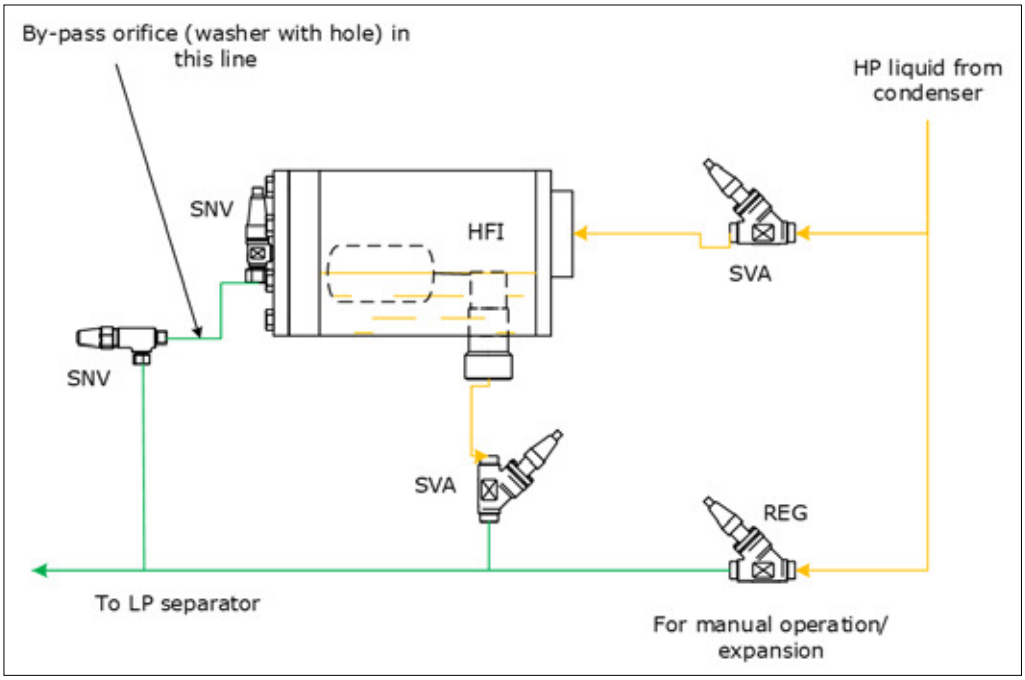

Application Example 4.1.4: Installation example for HFI fitted away from condenser with standard HFI housing

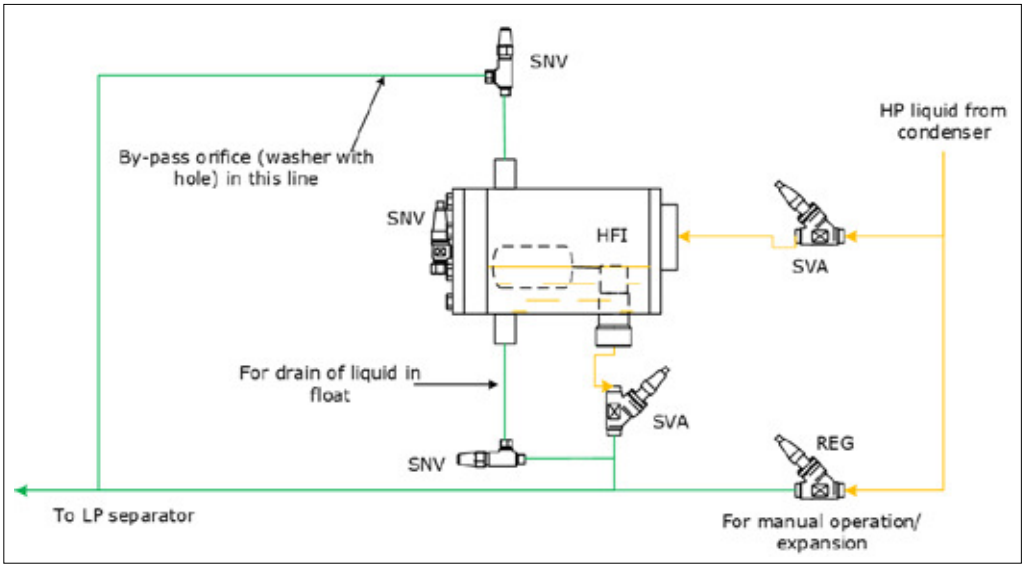

Application Example 4.1.5: Installation example for HFI fitted away from condenser with HFI housing with two extra connections

4.2 Low-pressure liquid level regulation system (LP LLRS)

When designing an LP LLRS, the following points must be taken into consideration:

The liquid level in the low-pressure vessel (liquid separator/ shell-tube evaporator) is maintained at a constant level. This is safe for the system, since an excessively high liquid level in the liquid separator may cause liquid carryover to the compressor, and an excessively low level may lead to cavitation of the refrigerant pumps in a pump circulation system.

Often, LLS 4000s are employed as high- and low-level alarms, although when a level transmitter is used, the low-level alarm is usually taken from the level transmitter.

The HP receiver must be large enough to accumulate the liquid refrigerant coming from the evaporators. When the content of refrigerant in some evaporators varies with the cooling load, some evaporators are shut off for service, or part of the evaporators are drained for defrosting.

As a result of the above, LP LLRS are especially suitable for decentralised systems in which there are many evaporators, and there is a large refrigerant charge, e.g. cold stores. With LP LLRS, these systems can run safely even though it is impossible to precisely calculate the refrigerant charge.

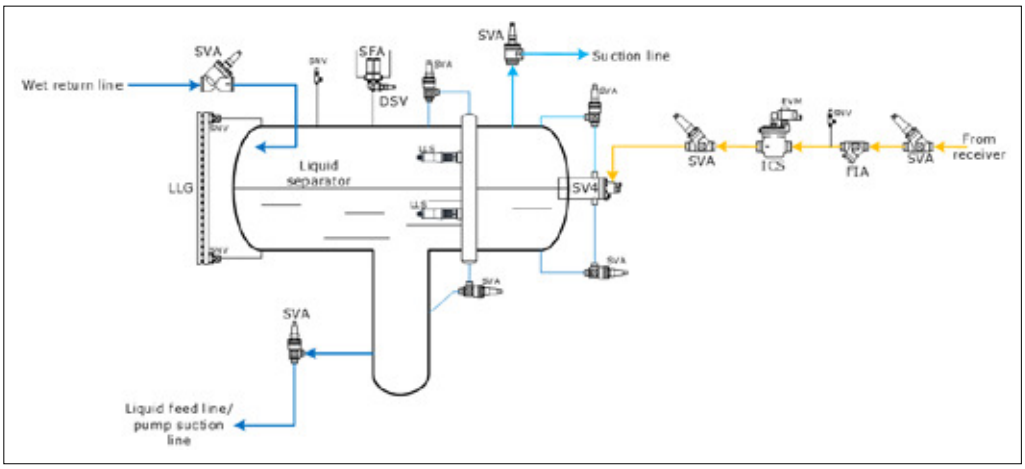

Application Example 4.2.1: Mechanical solution for LP liquid level regulation

SV float valves 'monitor' the liquid level in low-pressure vessels.

If the system capacity is small, the SV4, valves can act directly as an expansion valve in the low-pressure vessel as shown.

© Danfoss | Climate Solutions | 2022.10

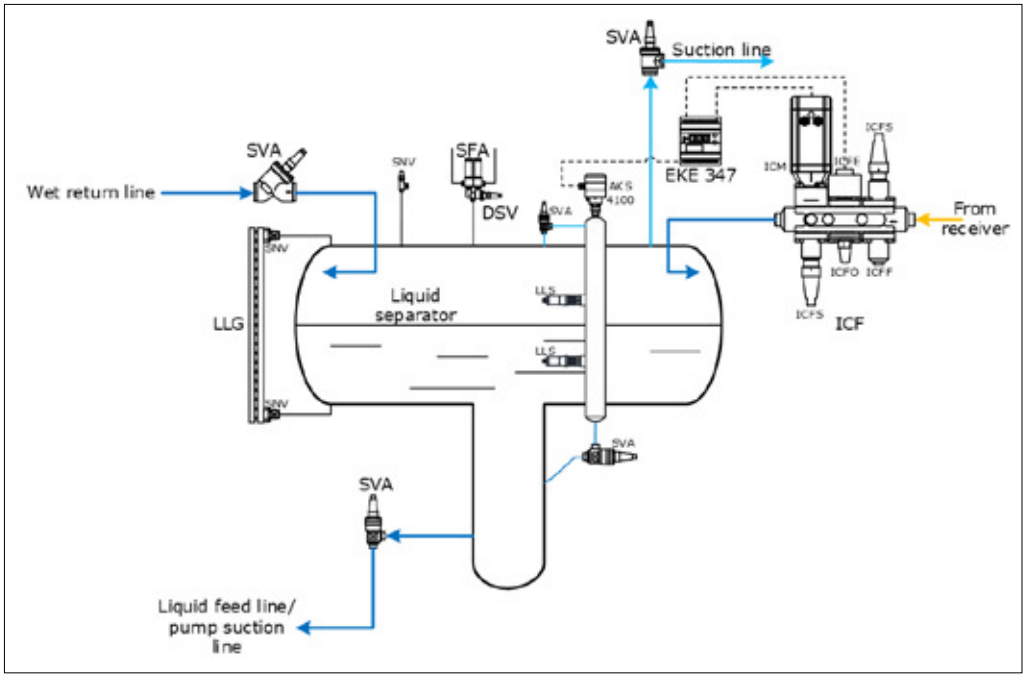

Application Example 4.2.2: Electronic solution for LP liquid level regulation

The level transmitter AKS 4100/4100U monitors the liquid level in the separator and sends a level signal to the liquid level controller EKE 347, which sends a modulating signal to the ICAD actuator of the motor valve ICM on the ICF valve station. The ICM motor valve acts as an expansion valve.

The solenoid valve ICFE on the ICF valve station is being used as an additional solenoid valve to ensure 100% closure during 'off' cycles.

The liquid level controller EKE 347 also provides relay outputs for upper and lower limits and for alarm levels. However, it is recommended that a level switch LLS4000 is fitted as a mechanical high-level alarm.

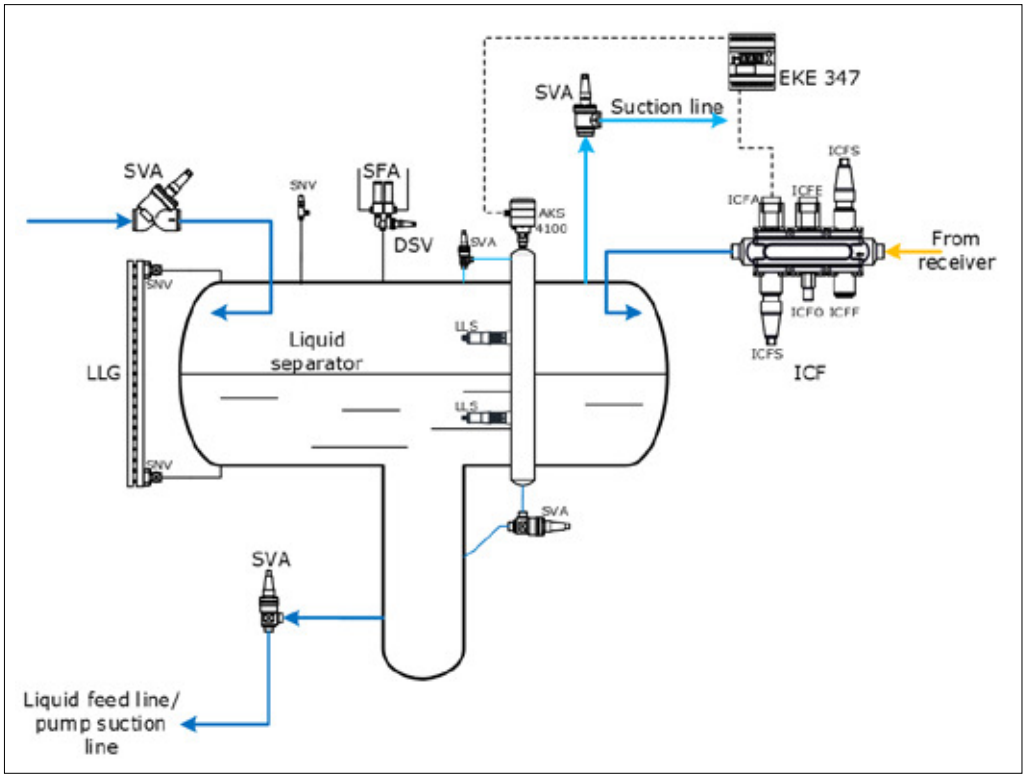

Application Example 4.2.3: Electronic solution for LP liquid level regulation

This solution is similar to the solution shown in Application Example 4.2.3. However, with this example the motor valve ICM is replaced by a pulse-width electronically operated expansion valve ICFA on the ICF valve station. The solenoid valve ICFE, which is also mounted on the ICF valve station, is being used as an additional solenoid valve to ensure 100% closure during 'off' cycles.

The line should be sized to the full capacity of the ICFA valve, or AKVA valve if serially connected.

The liquid level controller EKE 347 also provides relay outputs for upper and lower limits and for alarm level. However, it is recommended that a level switch LLS4000 be fitted as a high-level alarm.

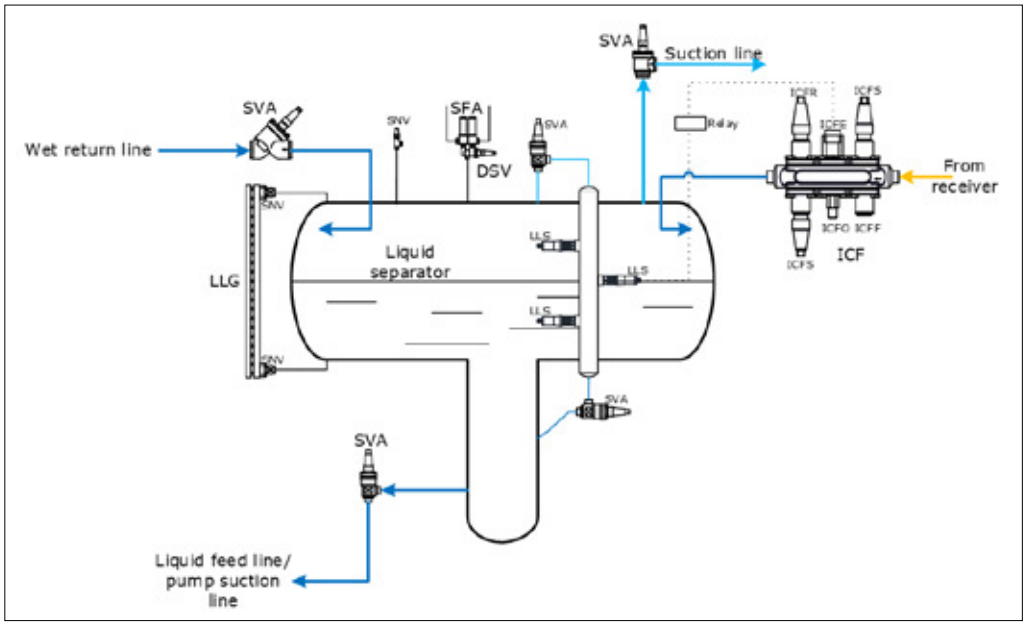

Application Example 4.2.4: Electronic solution for LP liquid level regulation

This solution controls the liquid injection using on/off regulation. The level switch LLS 4000 on the right side of the level sensor controls the switching of the solenoid valve ICFE in accordance with the liquid level in the separator. The hand regulating valve ICFR acts as the expansion valve

© Danfoss | Climate Solutions | 2022.10

4.3 Summary

Solution		Application	Benefit	Limitations
High-pressure liquid level regulation system (HP LLRS)– see section 4.1				
High-pressure electronic solution: AKS 4100 + EKE 347 + ICM	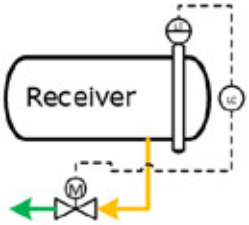	Applicable, especially to critical charged systems.	Flexible and compact. Possible to monitor and control remotely. Covers wide range of capacity.	Not permitted for flammable refrigerants.
High-pressure mechanical solution: HFI	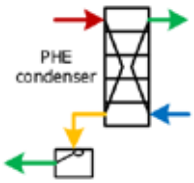	Applicable, especially to critical charged systems.	Purely mechanical. Simple solution. Especially suitable for plate heat exchangers.	
Low-pressure liquid level regulation system (LP LLRS)– see section 4.2				
Low-pressure mechanical solution: SV4-6		Applicable to small systems.	Purely mechanical. Simple, low cost solution.	Limited capacity. Complicated to change setpoint if not correct.
Low-pressure electronic solution: AKS 4100 + EKE 347 + ICM	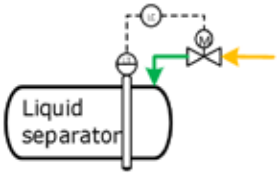	Particularly applicable to decentral systems like cold storages.	Flexible and compact. Possible to monitor and control remotely. Covers wide range of capacity.	Not permitted for flammable refrigerants.
Low-pressure electronic solution: AKS 4100 + EKE 347 + AKVA	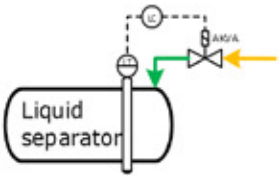	Particularly applicable to decentral systems like cold storages.	Flexible and compact. Possible to monitor and control remotely. Covers a wide range of capacities. Easy to install.	Not permitted for flammable refrigerants.
Low-pressure solution: LLS 4000 + ICFE + ICFR	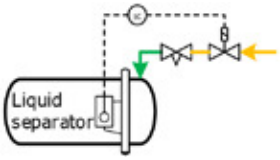	Particularly applicable to decentral systems like cold storages.	Simple. Inexpensive.	Just 40 mm for level adjustment. Very dependent on the adjustment of the REG valve. Not suitable for systems with big capacity fluctuations. Complicated to change setpoint if not correct.

5. Evaporator controls

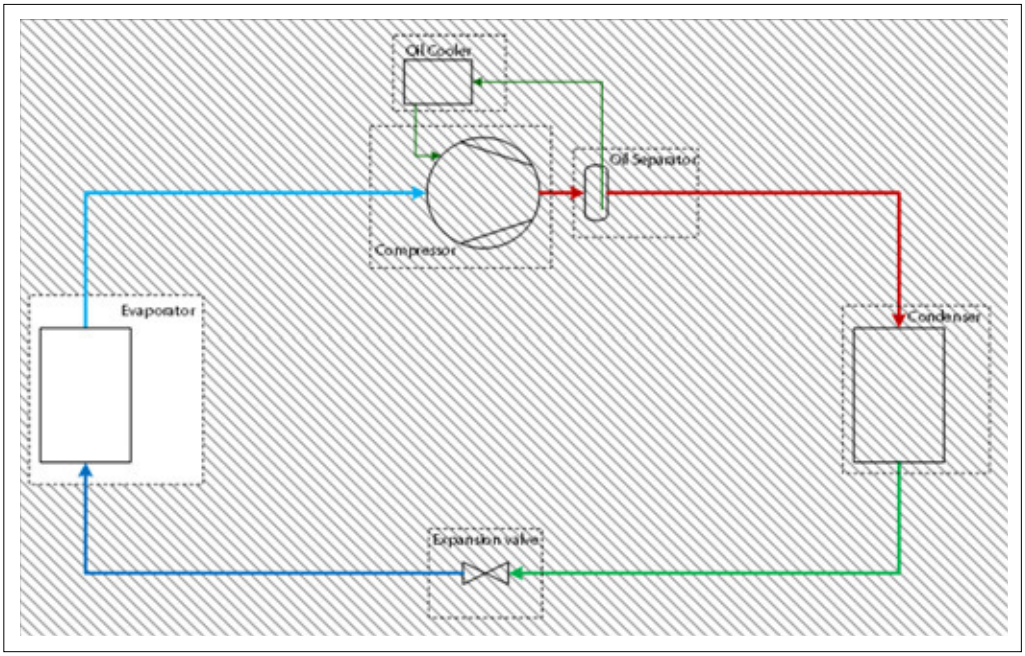

The evaporator is the part of the refrigeration system where the effective heat is transferred from the media you want to cool down (e.g. air, brine, or the product directly) to the refrigerant.

Therefore, the primary function of an evaporator control system is to achieve the desired media temperature. Furthermore, the control system should also keep the evaporator operating efficiently and trouble-free at all times.

Specifically, the following control methods may be necessary for evaporators:

Temperature controls (Section 5.1): Describes methods for controlling media temperature within tight thresholds with high accuracy, as well as for operating evaporators at different temperature levels.

Liquid supply controls (Section 5.2): Describes methods for controlling liquid injection for a direct expansion (DX) evaporator and liquid supply for a pumped circulation evaporator.

Defrost Methods (Section 5.6): Briefly describes the different methods for defrosting evaporators.

Hot Gas Defrosting Controls (Section 5.6.3): Describes the steps of the hot gas defrost sequence and general considerations. Hot gas defrosting application examples are covered separately for DX evaporators and pumped circulation evaporators, since they differ, for example, in the draining methods.

© Danfoss | Climate Solutions | 2022.10

5.1 Temperature controls

5.1.1 Media temperature control

Solutions are provided for where there are stringent requirements for accurate temperature control in connection with refrigeration, for example:

- Cold room for fruits and food products
- Work premises in the food industry
- Process cooling of liquids

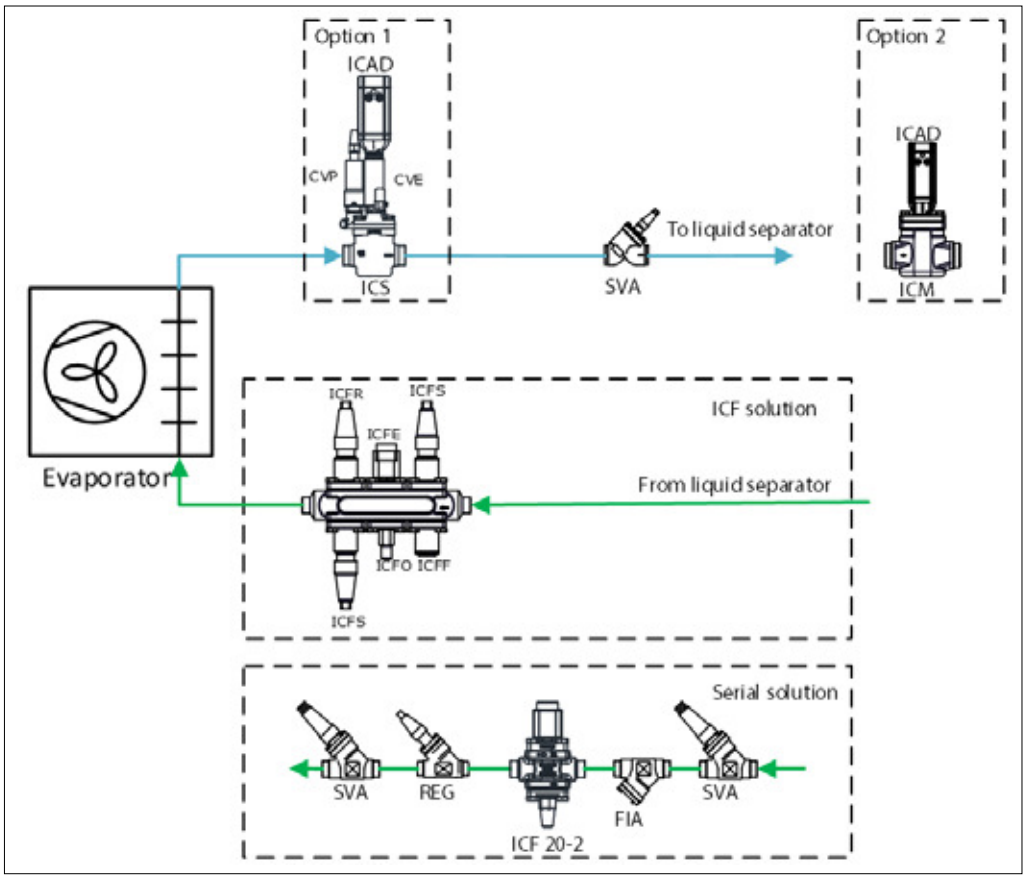

Application Example 5.1.1: Media temperature control using either pilot-operated valve or motor-operated valve

Application Example 5.1.1 shows a solution for accurate media temperature control. Furthermore, there is a need to protect the evaporator against an excessively low pressure to prevent the products from freezing up in the application.

This design can be applied for DX or pumped liquid circulation evaporators with any type of defrost system.

The servo valve (ICS) is controlled by the two serially connected pilot valves (CVE) in the S2 port, controlled by a media temperature controller, e.g. Danfoss EKC 361, and CVP in the S1 port.

The CVP is adjusted according to the lowest pressure permitted for the application.

The functionality of the pilot-operated servo valve solution (ICS):

The media temperature controller will control the temperature in the application at the desired level by controlling the opening of the CVE pilot valve, and thereby controlling the evaporating pressure to match the required cooling load and temperature.

The second control option is the motor valve ICM, where a media temperature controller controls the opening degree of the ICM motor valve.

This solution will control the temperature with an accuracy of +/- 0.25 °C (+/- 0.45R). If the temperature falls below this range, the EKC controller can close the solenoid valve in the liquid line.

The media temperature controller EKC 361 will control all functions of the evaporator, including thermostat and alarms.

For more details, please refer to the manual of the EKC 361 controller.

5.1.2 Multi-temperature changeover

In the process industry, it is very common to use an evaporator for different temperature settings.

When the operation of an evaporator is required at two different fixed evaporating pressures, this can be achieved by using one servo valve ICS with two constant pressure pilots.

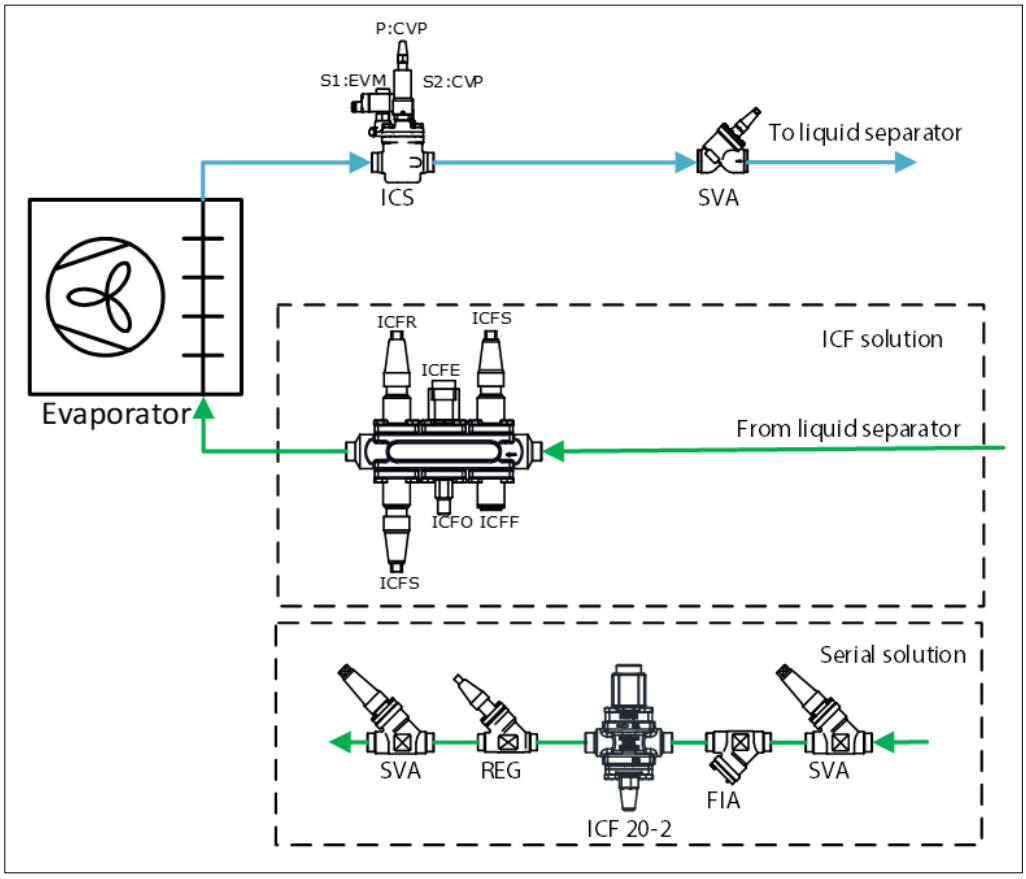

Application Example 5.1.2: Evaporator pressure control - changeover between two pressure levels

Application Example 5.1.2 shows a solution for controlling two evaporating pressures in evaporators. This solution can be used for DX or pumped liquid circulation evaporators with any type of defrost system.

The servo valve ICS is equipped with one EVM (NC) solenoid valve pilot in the S1 (serial 1) port and two CVP constant pressure pilots in ports S2 and P respectively.

The CVP in the S2 (serial 2) port is adjusted to the lower operating pressure and the CVP in the P port is adjusted to the higher operating pressure.

When the solenoid in the S1 port is energized, the evaporator pressure will follow the setting of the CVP pilot in the S2 port. When the solenoid is de-energized, the evaporator pressure will follow the setting of the CVP pilot in the P port.

The Danfoss ICS pilot-operated servo valve solution has options for being controlled by either 1 pilot or 3 pilots. The 1-pilot system works by having a pilot valve to the opening of the servo valve based on the pilot's set conditions. The 3-pilot system has two lines of pilots, one line with 1 pilot (the parallel line) and another line with 2 pilots serially connected (S1 and S2 ports). Having 2 pilots serially connected allows more options to be set for the operation of the servo valve. The pilot in the parallel line (P port) can open the servo valve independently of the pilots in the serial ports, which is shown in the example below.

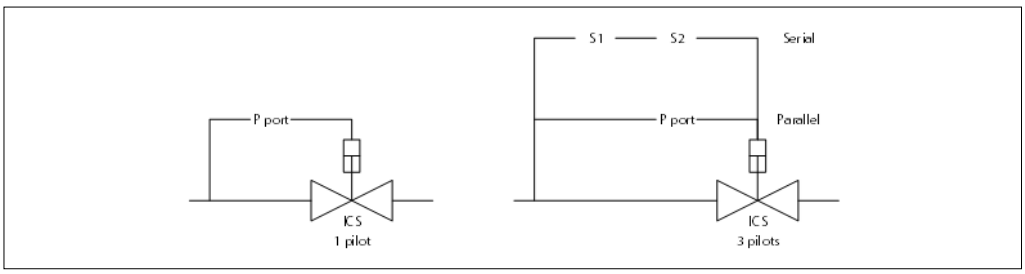

Application Example 5.1.3: ICS Pilot Configurations

© Danfoss | Climate Solutions | 2022.10

Example:

	I	II
Outlet air temperature	+3 °C (37.4 °F)	+8 °C (46.4 °F)
Evaporating temperature	–2 °C (28.4 °F)	+2 °C (35.6 °F)
Temperature change	5K (9 °F)	6K (10.8 °F)
Refrigerant	R 717	R 717
Evaporating pressure	3.0 bar (43.5 psi)	3.6 bar (52.2 psi)

S2: CVP is preset to 3.0 bar (43.5 psi), and
P: CVP is preset to 3.6 bar (52.2 psi).
I: EVM pilot opens. The evaporating pressure is therefore controlled by S2: CVP.
II: EVM pilot closes. The evaporating pressure is therefore controlled by P: CVP.

5.2 Liquid supply control

Liquid supply to the evaporator is controlled differently depending on the system complexity, refrigerant and application.

There are 3 different liquid supplies to the evaporator: Direct expansion (DX), pump circulation and natural circulation.

For direct expansion, high-pressure liquid refrigerant is supplied to the evaporator through an expansion valve. In the evaporator it is fully evaporated and superheated to avoid liquid hammering in the compressor. The liquid supply is controlled by a superheat-controlled expansion valve.

For pump circulation, a liquid refrigerant is pumped to the evaporator from a separator vessel. The refrigerant is partially evaporated in the evaporator and returned to the separator, where the vapour is fed to the compressor.

For natural circulation, a liquid refrigerant is driven by gravity to the evaporator. Since the refrigerant flow is driven by gravity, and not a pump, special consideration must be given to the distance from separator to evaporator and the height of risers in the return lines. The refrigerant is partially evaporated, like for the pump-circulated system, and returned to the separator. Controls for natural circulation are similar to those for a pump-circulated system, therefore they are covered in the section with pump-circulated controls.

5.2.1 Direct expansion control

When designing liquid supply for direct expansion evaporators, the following requirements should be met:

The liquid refrigerant supplied to the evaporator is completely evaporated. This is necessary to protect the compressor against liquid hammer.

The media 'off' temperature from the evaporator is maintained within the desired range.

The liquid injection is controlled by a superheat-controlled expansion valve, which maintains the superheat at the outlet of the evaporator within a desired range. This expansion valve can be either a thermostatic expansion valve, or an electronic expansion valve.

The temperature control is normally achieved by ON/OFF control, which starts and stops the liquid supply to the evaporator based on the media temperature.

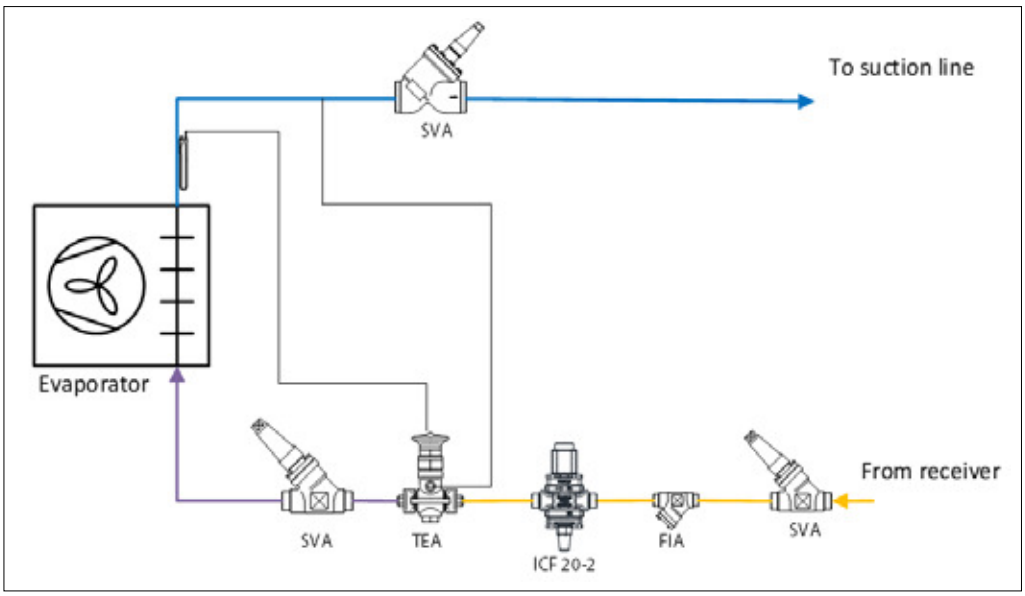

Application Example 5.2.1: Direct expansion (DX) evaporator with thermostatic expansion

Application Example 5.2.1 shows a typical installation for a DX evaporator without hot gas defrosting.

The liquid injection is controlled by the thermostatic expansion valve, TEA, which maintains the refrigerant superheat at the outlet of the evaporator at a constant level. TEA is designed for ammonia. Danfoss also supply thermostatic expansion valves for fluorinated refrigerants. For CO_2 DX systems, electronic expansion valves should be used, such as an ICM motor valve.

The media temperature should be controlled by a digital thermostat (Danfoss EKC 202), which will control the on/off switching of the solenoid valve, ICF 20-2, according to the temperature signals from the temperature sensors. Danfoss can provide digital thermostats and temperature sensors.

This solution can also be applied to DX evaporators with natural or electric defrost.

Natural defrost is only possible if the cold r oom temperature is well above 0 °C (32 °F). It is achieved by stopping the refrigerant flow to the evaporator, and keeping the fans running. Electric defrost is achieved by stopping the fans and the refrigerant flow to the evaporator, and at the same time switching on an electric heater inside the evaporator fin block.

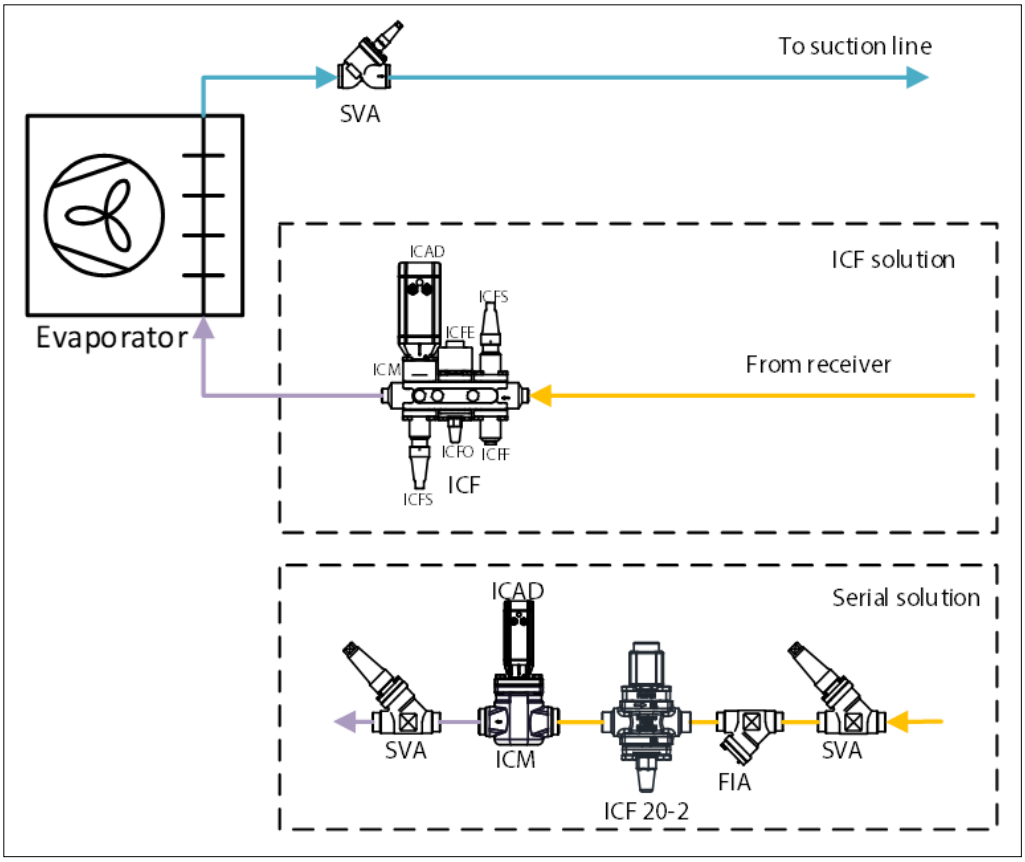

Application Example 5.2.2: Direct expansion (DX) evaporator with electronic expansion by a motor valve (ICM)

Application Example 5.2.2 shows a typical installation for an electronically controlled DX evaporator without hot gas defrost.

The ICF control solution is shown in the liquid supply line, but the serial solution could be used instead. The ICF will accommodate up to six different modules assembled in the same housing, offering a compact and easy-to-install control solution.

The liquid injection is controlled by the motor valve, ICM, which is controlled by an evaporator controller, e.g. EKC 315A (not shown). The evaporator controller will measure the superheat by means of a pressure transmitter and a temperature sensor on the outlet of the evaporator. The evaporator controller controls the opening degree of the ICM motor valve in order to maintain the superheat at the optimum level.

At the same time, the evaporator controller operates as a digital thermostat which controls the on/off switching of the solenoid valve, ICFE/ICF 20-2, depending on the media temperature signal from a temperature sensor on the evaporator.

Compared with the solution in Application Example 5.2.1, this solution will constantly adapt the opening degree of the injection valve to ensure maximum capacity and efficiency. Furthermore, this solution offers more accurate control of media temperature.

This solution can also be applied to DX evaporators with natural or electric defrost.

© Danfoss | Climate Solutions | 2022.10

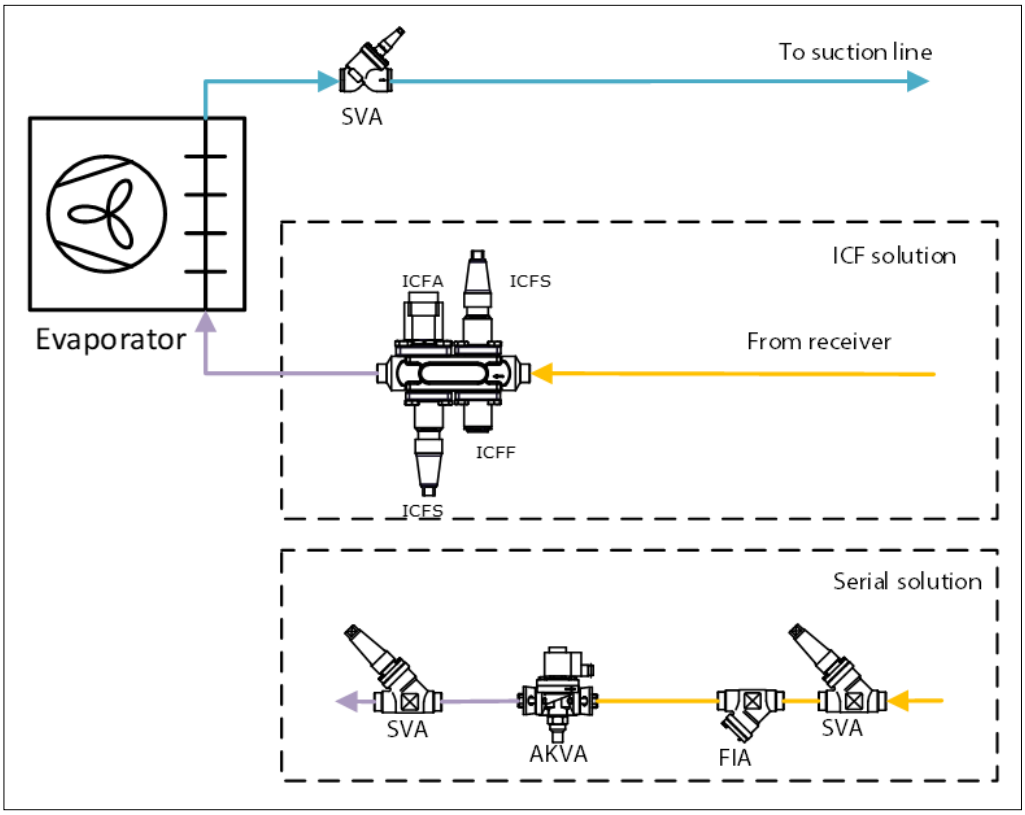

Application Example 5.2.3: Direct expansion (DX) evaporator with electronic expansion by a PWM AKVA valve

Application Example 5.2.3 shows an installation for an electronically controlled DX evaporator without hot gas defrost.

This application example shows an ICF control solution for an electronically controlled DX evaporator without hot gas defrost.

The ICF control solution is shown in the liquid supply line, but the serial solution could be used instead. The ICF can accommodate up to six different models in the same housing, offering a compact and easy-to-install control solution.

The liquid injection is controlled by the pulse width modulation (PWM) electronic expansion valve, ICFA, which is controlled by an evaporator controller, e.g. EKC 315A (not shown). The evaporator controller will measure the superheat by means of a pressure transmitter and a temperature sensor on the outlet of the evaporator. The evaporator controller controls the opening degree of the ICFA valve in order to maintain the superheat at the optimum level.

Compared with the solution in Application Example 5.2.1, this solution will constantly adapt the opening degree of the injection valve to ensure maximum capacity and efficiency. Furthermore, this solution offers more accurate control of media temperature.

This solution can also be applied to DX evaporators with natural or electric defrost.

5.2.2 Flooded evaporator circulation control

Traditional industrial refrigeration systems are flooded systems. In a flooded system, the evaporators are injected with more liquid than is needed for full evaporation, which means that the refrigerant is not superheated in the evaporator. A separator vessel is used for supplying liquid refrigerant to the evaporator, to collect the wet return flow and separate the phases of the refrigerant. From the separator, the gas phase of the refrigerant is fed to the compressor suction line and the liquid phase is fed to the evaporator supply line.

For flooded evaporators, the heat exchanger area is not used for superheating the refrigerant. In terms of heat transfer, superheating refrigerant is inefficient compared to evaporation, due to a lower heat transfer for superheating compared to evaporation. Therefore, a flooded evaporator can be operated at a higher evaporation temperature than if it was running as DX with superheat. A detailed explanation of heat transfer principles for evaporators can be found in chapter 12.

The benefit of liquid overfeed is increased efficiency of the coolers, due to better utilization of evaporator surface area, and better heat transfer, due to a higher heat transfer coefficient. In addition, flooded systems are relatively easy to control.

Circulation rate

The amount of liquid supplied to the evaporators is defined by the 'circulation rate'. The circulation rate is 1 when exactly enough liquid is supplied to be fully evaporated in the cooler. If, however, twice as much liquid is injected, the circulation rate is 2. See Table 5.1 below.

Circulation rate, n	Liquid mass flow supplied	Gas mass flow out	Liquid mass flow out
1	100%	100%	0%
2	100%	50%	50%
4	100%	25%	75%
8	100%	12.5%	87.5%

Table 5.1: Examples of refrigerant phases' fractions at different circulation rates

Natural circulation flooded evaporators

For natural circulation flooded evaporators, the refrigerant flow is driven by gravity. It is essential to the refrigerant flow that pressure losses are kept as low as possible, thus fewer flow controlling components are typically installed in the supply and return lines.
The refrigerant flow is less controllable compared to a pumped circulation flooded evaporator and a natural circulation evaporator is placed closer to the liquid separator since it is mainly used as a plate heat exchanger for water or glycol chillers.

Pumped circulation flooded evaporators

When compared to ammonia DX systems, ammonia pump circulation systems control becomes simpler as a well-dimensioned pump separator protects compressors against hydraulic shock. The pump separator ensures that only 'dry' refrigerant vapour is returned to the compressors. The evaporation control is also simplified as only a basic on/off liquid control to the evaporators is required.

The injected liquid at the correct temperature is pumped from a separator to the evaporators. When liquid is needed, a solenoid valve in front of the evaporator is opened. A manual regulating valve is usually fitted after the solenoid valve to allow the required circulation rate to be set and hydraulic balance to be achieved in the system.

Temperature control in evaporators can be managed as follows:

- Regulating valve for distribution control + ON/OFF solenoid valve for temperature control
- Regulating valve for distribution control + pulse-width modulated solenoid valve for temperature control
- AKV valves for both distribution control (orifice size) and PWM temperature control.

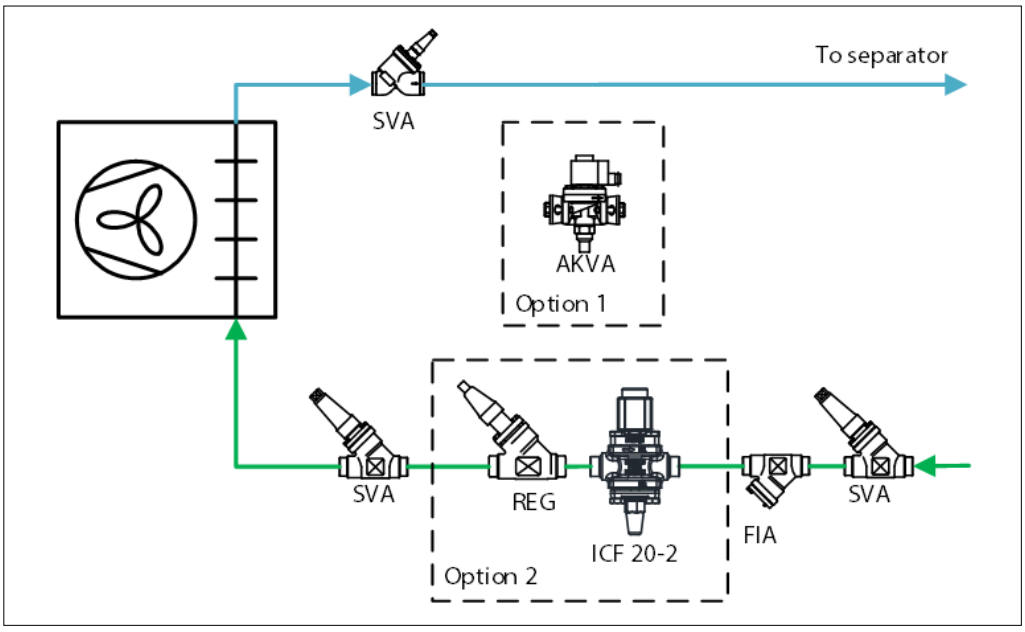

Figure 5.2.1: Liquid injection valves for pumped circulated systems

5.3 Injection with a solenoid valve (ICF 20-2)

In a traditional flooded system, liquid injection is controlled by a thermostat which constantly measures the air temperature.

The solenoid valve is opened for several minutes or longer until the air temperature has reached the setpoint. During injection, the mass of the refrigerant flow is constant.

This is a very simple way to control the air temperature. However, the temperature fluctuation caused by the differential of the thermostat may cause unwanted side effects in some applications, e.g. dehumidification and inaccurate control.

© Danfoss | Climate Solutions | 2022.10

5.4 Injection with a pulse width modulation AKV(A) valve

Instead of injecting periodically, as described above, one can also constantly adapt the liquid injection to the actual demand. This can be done by means of a pulse-width-modulated (PWM) AKV(A) valve type controlled by an AK-CC 450.

The air temperature is constantly measured and compared to the reference temperature. When the air temperature reaches the setpoint, the opening of the AKV(S) is reduced, giving it a smaller opening angle during a cycle, resulting in less capacity and vice versa. The duration of a cycle is adjustable between 30 sec. and 900 sec.

In principle, the regulation in this system is performed with a PI function. This results in reduced fluctuation of the regulated air temperature with stable loads, giving a more constant air humidity. The function offers constant temperature regulation with a temperature value that lies half way between the on and off values of the thermostat.

The operating parameters of the PI regulation are automatically optimized via the preset on and off values and the degree of opening of the valve. The differential affects the amplification of the regulator and can therefore not be set to less than 2K to ensure regulation stability. In a flooded system, this means that the average refrigerant flow is constantly controlled and adapted to the demand, with the circulation rate decreasing when less refrigerant is injected.

This approach to liquid injection in a flooded system is very versatile. The amount of injected liquid can be precisely controlled.

A direct effect of this is a lower average surface temperature of the air cooler, resulting in a smaller ΔT between the refrigerant and the air. This increases the accuracy and the energy efficiency of the system.

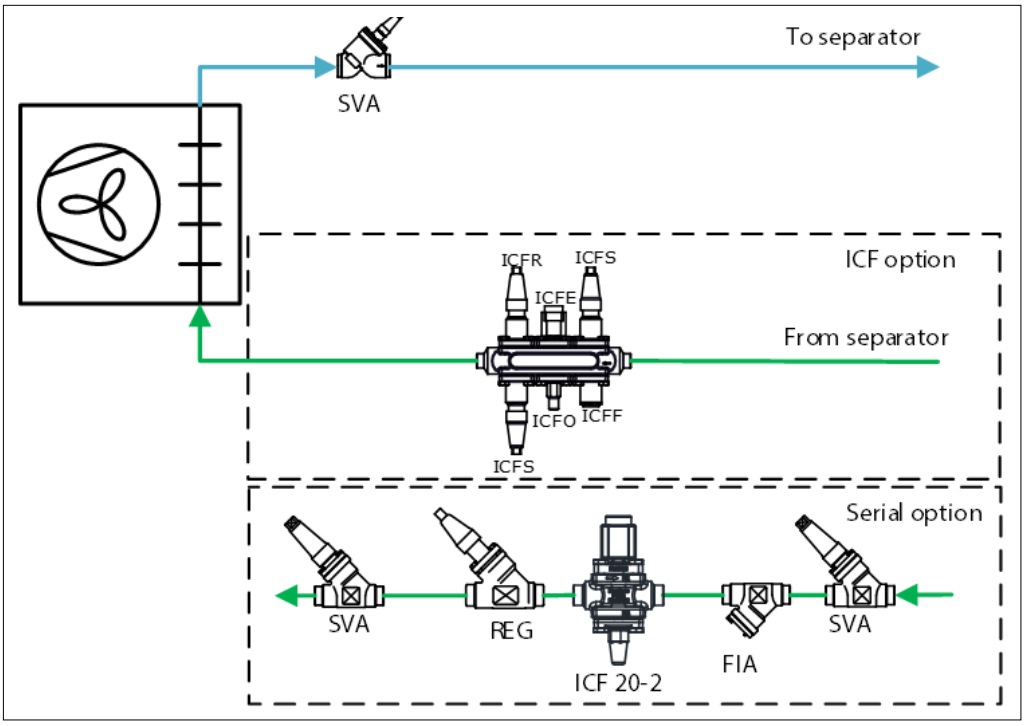

Application Example 5.4.1: Pumped liquid circulation evaporator with solenoid valve for liquid injection

Application Example 5.4.1 shows a typical installation for a pumped liquid circulation evaporator without hot gas defrost and can also be applied to pumped liquid circulation evaporators with natural or electric defrost.

The media temperature is maintained at the desired level by a digital thermostat, e.g. EKC 202, which controls the on/off switching of the solenoid valve, ICF 20-2, according to a media temperature signal from a temperature sensor, e.g. AKS 21.

The amount of liquid injected into the evaporator is controlled by the opening of the manual regulating valve, ICFR/REG. It is important to set this regulating valve at the right opening degree. Too high an opening degree will lead to frequent operation of the solenoid valve with resultant wear. Too low an opening degree will starve the evaporator of liquid refrigerant.

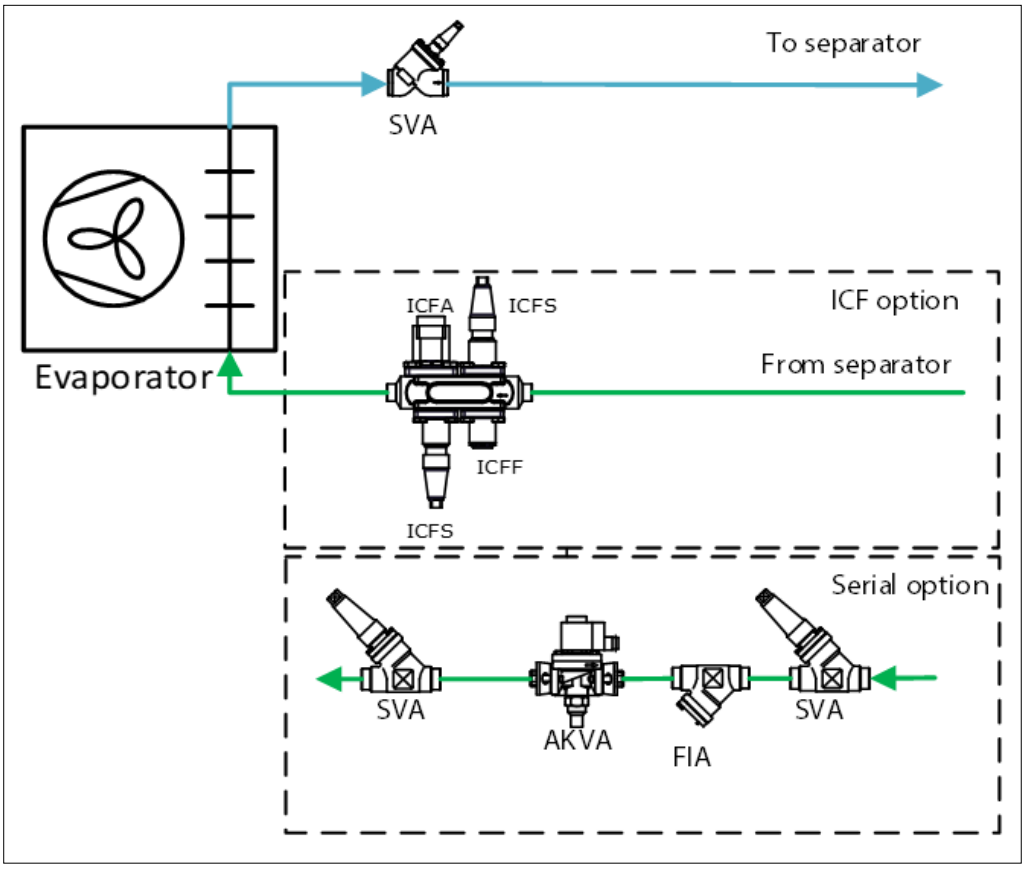

Application Example 5.4.2: Pumped liquid circulation evaporator with pulsed width modulated (PWM) AKV valve for liquid injection

Instead of injecting periodically, as described above, one can also constantly adapt the liquid injection to the actual demand. This can be done with a PWM AKVA valve or an ICF with an ICFA solenoid module.

The air temperature is constantly measured and compared to the reference temperature with a digital thermostat, e.g. AK-CC 450. When the air temperature reaches the setpoint, the AKVA valve opening is reduced. This decreases the degree of opening during the cycle, resulting in less capacity. The duration of a cycle is adjustable between 30 sec. and 900 sec.

In a flooded system, this means that the average refrigerant flow is constantly controlled and adapted to demand.

This approach to liquid injection in a flooded system is very versatile. The amount of injected liquid can be precisely controlled, which increases the accuracy and the energy efficiency of the system.

5.5 Risers

Two-phase flow – a flow that is a mixture of vapour and liquid – presents some special problems with regard to the design of piping. Two-phase flow is usually in the return line from flooded evaporators, which are evaporators where more refrigerant is circulated than is evaporated. The amount evaporated is proportional to the capacity of the heat exchanger and usually the situation is described with a capacity and a 'circulation rate'.

There are two key considerations for two-phase lines:

The pressure loss: The pressure loss of a two-phase flow is much higher than a single phase (vapour) flow at the same speed, so the speed in two-phase lines is usually kept lower than in vapour-only lines. For low temperature applications, pressure loss presents a large performance penalty, while for thermosyphon (self-circulation) systems, the pressure loss must be small to ensure proper circulation.

The flow pattern: The flow pattern describes how the two phases flow, mixed or separately. Depending on the composition (% of each phase) and overall speed, the combined flow behaves very differently, and the pressure loss is a result of the combined behaviour.

The topic of flow pattern is very complex, so only a simple explanation will be given here. Looking at the sketched flow patterns in horizontal pipes in Figure 5.5.1 below, it can generally be seen that from top to bottom and left to right there is an increasing amount of vapour and with that a higher overall velocity.

© Danfoss | Climate Solutions | 2022.10

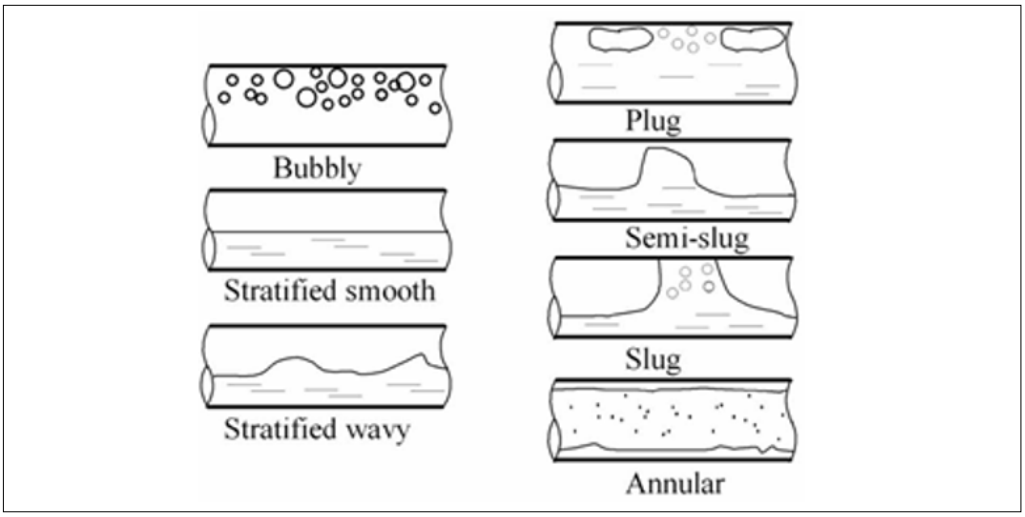

Figure 5.5.1: Two-phase flow patterns in horizontal pipe

Note how a higher vapour speed disturbs the liquid through friction on the surface, inducing waves that eventually reach the top of the pipe to enclose gas 'slugs'. Eventually the speed becomes so high that the friction forces are stronger than the gravitational forces, and the 'annular' flow pattern is reached. In the annular flow, the liquid flows in a 'film' on the inner surface of the pipe with the high-speed vapour flowing in the centre of the pipe.

In a horizontal pipe, any of these flow patterns are usually not a problem, provided the pressure loss is accounted for. It is common practice to install two-phase 'horizontal' lines with a small downward slope towards the destination to ensure that the liquid is safely transported to the destination.

In a vertical pipe, however, it is very different. Downward flow presents its own problems, mainly relating to liquid falling and possibly inducing pressure fluctuations, but transport of the liquid to the destination is almost guaranteed. With upward flow, however, the liquid transport is not guaranteed and that can give rise to problems in refrigeration systems.

In Figure 5.5.2 below, a different flow pattern in upwards flow is shown. The vapour speed generally increases from left to right. With very low velocity, the pipe fills with liquid and the vapour bubbles through it. Increased velocity collects the vapour in larger 'slugs' that, with a further increase, start to fill the centre of the pipe. Once the slugs collect to form a channel in the middle, the flow is said to be annular. The remarkable thing about annular flow is that the friction forces on the vapour/liquid surface can drag the liquid on the pipe wall upwards, thereby providing an upward liquid transport.

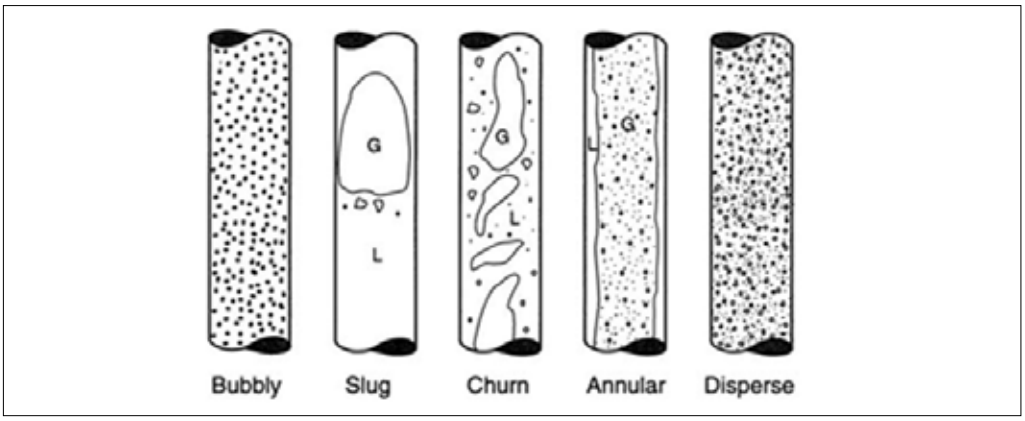

Figure 5.5.2: Two-phase flow patterns in vertical pipe

Since the amount of vapour is determined by the evaporating capacity, it is not usually an option to increase vapour flow. However, the same vapour flow can yield higher velocities in a smaller pipe and thus the Figure 5.5.2 above can be seen as the same vapour flow with pipe size decreasing left to right.

Most technicians would intuitively think that a higher velocity means greater pressure loss, but that is not the case with vertical upward two-phase flow.

In the 'bubbly' flow pattern, the liquid fills up most of the pipe from top to bottom before it starts to overflow the top. Thus, the pressure loss associated with this flow is the height of the pipe, multiplied by the liquid density and the gravitational constant. In an example with R717 at -10 °C (14 °F) in a large pipe with a height of 3 meters, this is 652 kg/m^3 * 3 m * 9.81 m/s^2 = 0.19 bar (40.7 lb/ft^3 * 9.84 ft * 32.18 ft/s^2 = 2.78 psi). The pressure loss is most likely somewhat lower since, because of the vapour bubbles, the average density is lower than saturated liquid, though not much lower.

Reducing the pipe size increases the speed. Below in Figure 5.5.3 is a Coolselector2 calculation of a 3 m (9.84 ft) DN50 pipe with 100 kW (28.6 TR) evaporator capacity at -10 °C (14 °F) R717, circulation rate 3. It is remarkable that the speed is relatively high at 14 m/s (45.9 ft/s), but the pressure loss is only 0.022 bar (0.32 psi). The explanation is that the pressure loss relates to (almost) pure gas running in a slightly smaller 'pipe' (the channel in the centre of the pipe) and the friction of this pulls up the liquid. The gravitational pressure loss is no longer the major part of the pressure loss, but rather the frictional pressure loss dominates.

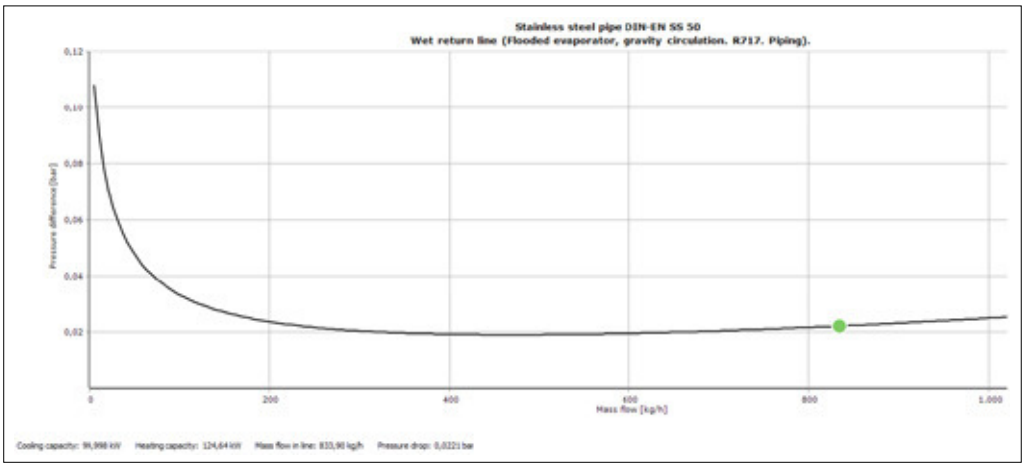

Figure 5.5.3: Pressure loss in riser at appropriate circulation rate

The above 100 kW (28.6 TR) at -10 °C (14 °F) R717, circulation rate 3, equates to 833.9 kg/hr (1838 lb/hr). Using the same flow but with a much larger circulation rate simulates a very low capacity and thus a low vapour flow as shown in Figure 5.5.4.

The speed is now 0.48 m/s (1,58 ft/s) – 1/28 th that of before – but the pressure loss is now 0.14 bar – approximately 6 times higher. This is due to the pipe filling up with liquid.

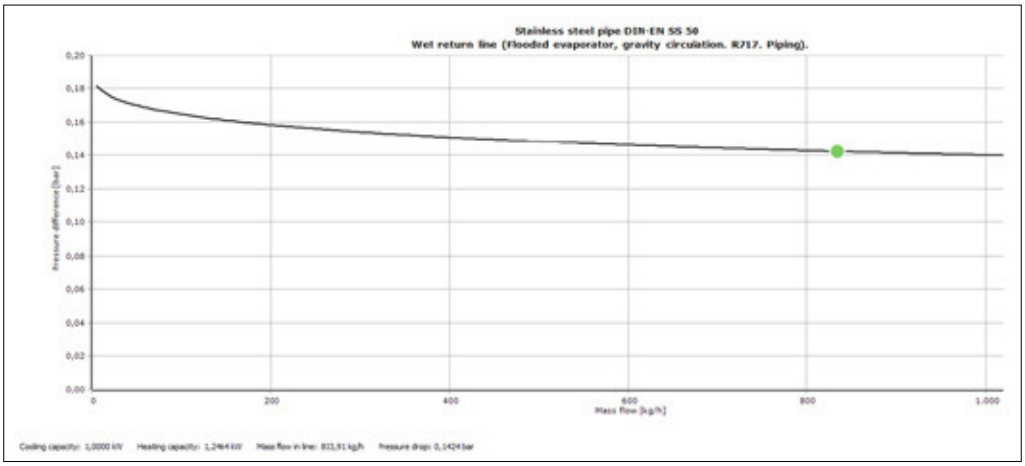

Figure 5.5.4: Pressure loss in riser at too high circulation rate

An excessively high pressure loss has, as mentioned above, some serious penalties. In low temperature applications, a pressure loss of 0.15 bar (2.2 psi) could have a significant impact on the efficiency and capacity of the system. For thermosyphon systems, the combined pressure loss in the return pipe and the heat exchanger must be smaller than the driving pressure provided by the liquid column in the inlet of the evaporator. Similar to the pressure loss calculation above, the driving pressure is the product of liquid density, height and gravitation. The vertical part of the return pipe is, more or less, the same as the vertical pipe providing the driving height, so a liquid-filled return pipe provides a pressure loss that is more or less the same as the driving pressure – leaving very little pressure drop available for the evaporator. In effect, that means that there will be no circulation in the system, the evaporator performance will drop and it will not deliver what is expected of it.

© Danfoss | Climate Solutions | 2022.10

The return pipe therefore needs to be designed carefully to avoid too great a pressure drop. The top Coolselector2 calculation in Figure 5.5.3 represents a good solution. Pressure loss is relatively low, and it shows that it is possible to reduce capacity on the heat exchanger without passing into the area where the return pipe starts to fill up with liquid and provide a greater pressure loss.

The resulting pressure loss should be added to the pressure loss in the evaporator with the pressure loss in the valves and compared to the driving pressure. A good margin is recommended for this.

It is also important to consider the circulation rate at part-load operation of the evaporators.

A properly designed vertical return pipe, utilizing the annular flow, is called a 'riser'. The Danfoss calculation software Coolselector2 can be used to calculate an appropriate circulation rate for a riser.

Pressure drop in risers can pose challenges when operating an evaporator in part-load conditions. The evaporator is typically dimensioned for a certain circulation rate at full load. A rule of thumb is that a circulation rate of 3 results in reasonable operation of the evaporator and pressure drop. However, it is extremely challenging to control the circulation rate, hence the mass-% of evaporated refrigerant under part-load conditions.

Figure 5.5.5 shows the pressure drop in a riser for a flooded evaporator with ammonia and DN 65 piping. The blue lines intersect at 67 kW (19.2 TR), which is the reference value condition at full load and a circulation rate of 3. The solid blue line shows the pressure drop at constant mass flow, hence the circulation rate varies with part-load conditions. The broken blue line shows the pressure drop at a constant circulation rate, hence the mass flow varies. It can clearly be seen that the pressure drop in the riser is significantly lower during part-load operation when the circulation rate is kept constant. The solid green line represents a situation with 1.5 in constant circulation rate under part-load conditions, which yields an even lower pressure drop. This clearly demonstrates that being able to control the circulation rate of a flooded evaporator can result in a better part-load system performance.

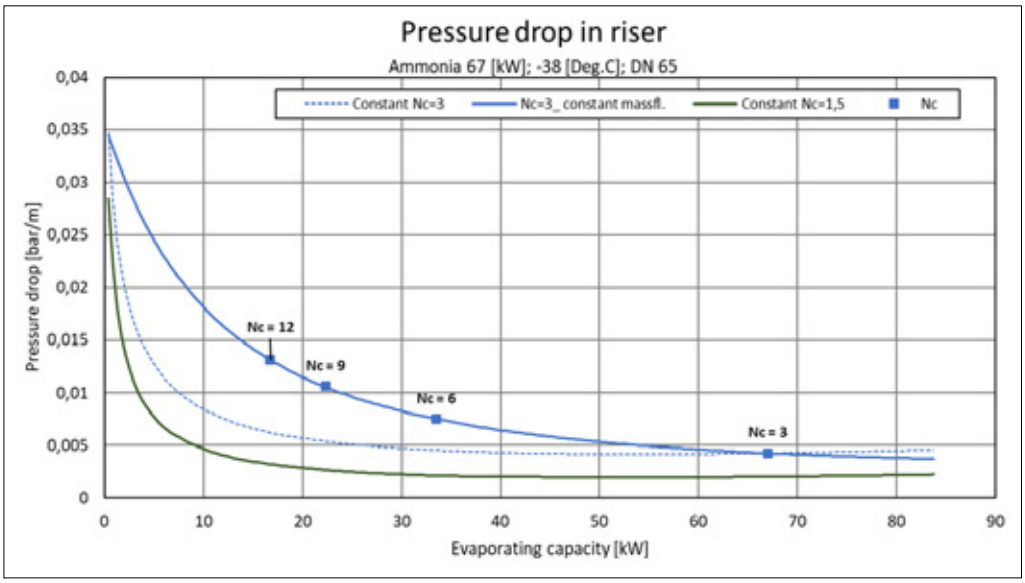

Figure 5.5.5: Pressure drop in riser in part-load operation

5.6 Defrost methods

In applications where the evaporator operates at evaporating temperatures below 0 °C (32 °F), frost will form on the heat exchanger surface, with its thickness increasing with time. The frost build-up leads to a drop in evaporator performance by reducing the heat transfer coefficient and blocking air circulation at the same time. These evaporators should therefore be defrosted periodically to keep their performance at the desired level.

The various types of defrost commonly used in industrial refrigeration are:

- Natural defrost
- Electric defrost
- Hot gas defrost
- Natural defrost

Natural defrost is achieved by stopping the refrigerant flow to the evaporator and keeping the fan running. This can only be used for room temperatures well above 0 °C (32 °F). The resulting defrosting time is long.

5.6.1 Electric defrost

Electric defrost is achieved by stopping the fan and the refrigerant flow to the evaporator and, at the same time, switching on an electric heater inside the evaporator fin block. With a timer function and/or a defrost termination thermostat, the defrosting can be terminated when the heat exchange surface is completely free of ice. While this solution is easy to install and low in initial investment, the operating costs (electricity) are considerably higher than for other solutions. Furthermore, there are considerable losses of heat from the electric defrost to the cold room. This adds an additional cooling load.

5.6.2 Hot gas defrost

For hot gas defrost systems, hot gas will be injected into the evaporator from the suction line to defrost the surface. This solution requires more automatic controls than other systems but has the lowest operating cost over time. A positive effect of hot gas injection into the evaporator is the removal and return of oil. To ensure enough hot gas capacity, this solution must only be used in refrigeration systems with three or more evaporators. As a rule of thumb, only a third of the total evaporator capacity can be under defrost at a given time.

5.6.3 Hot gas defrosting controls

The hot gas defrost method is an internal heat source defrost system that is designed in the main refrigeration system. The liquid feed to the evaporators is stopped and discharge gas from the compressors is directed to the evaporators. Hot gas defrosting systems are faster and more energy efficient than their alternatives, natural defrost and electric defrost.

To achieve the expected operation, behaviour and result, hot gas defrost systems must be designed and controlled correctly.

A principle diagram for a hot gas defrosting system is shown below in Figure 5.6.1.

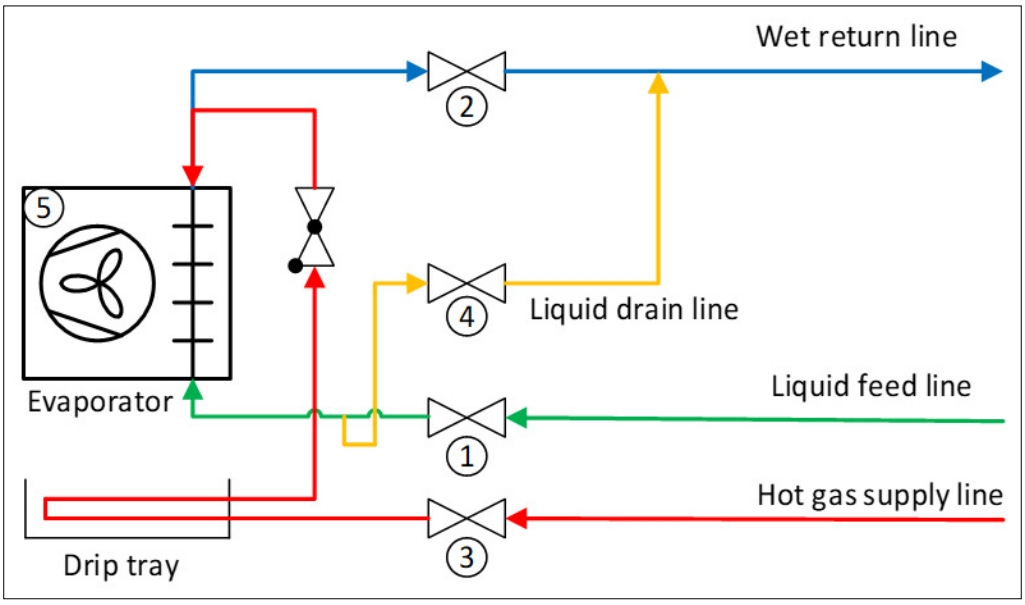

Figure 5.6.1: Hot gas defrost principle diagram

5.6.4 Hot gas defrosting sequence

To perform and operate hot gas defrost systems in a safe and efficient way, it is important that valves are opened and closed in a certain sequence and, most importantly, slowly and with great consideration. This is due to the large pressure difference between the hot gas and the evaporator, and because both gas and liquid phases are present.

A hot gas defrosting sequence is shown schematically below in Figure 5.6.2.

The horizontal bars at the top of the figure show whether a valve or fan is open/on or closed/off. When a bar is coloured black, the valve is open, and closed when the bar is grey. The graph at the bottom of the figure shows the pressure in the evaporator during the defrosting sequence. The numbers on the valves in the principle diagram in Figure 5.6.1 correspond to the numbers in the defrost sequence figure below. Each step in the hot gas defrosting sequence is described in detail below the figure.

© Danfoss | Climate Solutions | 2022.10

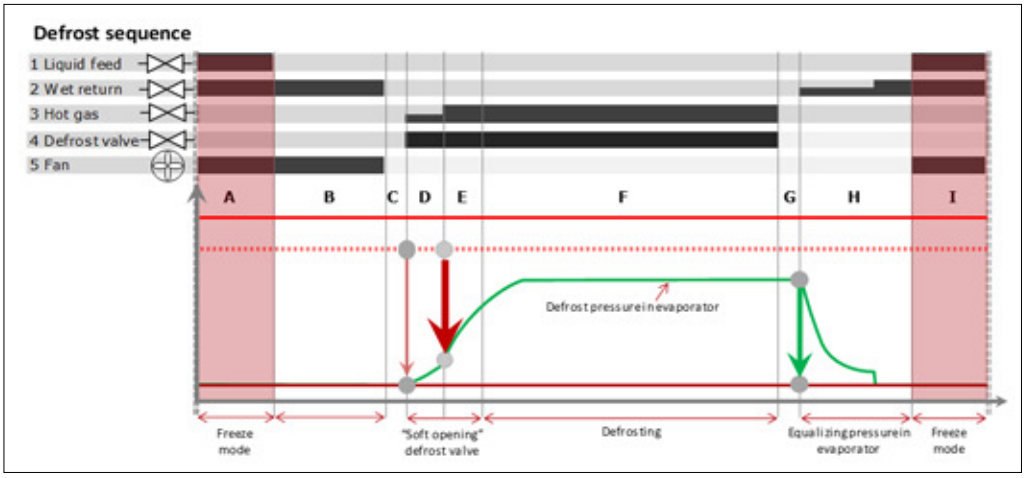

Figure 5.6.2: Hot gas defrost sequence

A: Freezing mode

In this mode, the freezing process is enabled and both the liquid line (valve 1) and wet suction line (valve 2) are in the open position.

The hot gas supply line valves (3) for the individual evaporator, and the condensate drain line valve (4) are all closed.

B: Draining phase

Prior to the actual hot gas injection into the evaporator, as much liquid CO_2 as possible must be boiled out. This phase is a must in the defrost sequence because it reduces safety risks.

The purpose of the draining phase is to reduce the following 2 phenomena:

- Liquid possibly being propelled
- Gas pockets imploding

Both are well-known contributors to liquid hammer. Liquid hammer causes extreme pressure shocks in the system, which in a worst case scenario could lead to fractures in components, pipes etc.

The liquid line is closed (valve 1), preventing CO_2 from entering the evaporator. The wet suction line (valve 2) remains open and the evaporator fans are kept running to enable a fast and efficient boil-out of the liquid CO_2. The duration of this phase depends on the temperature of the CO_2, the volume of the evaporator and the air flow across the evaporator. Typically, it takes a few minutes. Despite the possibility of using other methods to release the liquid CO_2 in this phase, the method described above is generally accepted to be the safest.

C: Stabilizing phase

The wet suction line closes (Valve 2) and the fans stop. Now all valves around the evaporator are closed and any remaining liquid can collect at the bottom of the evaporator and enable a smooth start to defrost.

D & E: Soft opening phase

Hot gas injection, step 1 and 2. It is generally not recommended to inject hot gas without any control. Remaining liquid in transport lines or evaporators must be prevented from causing liquid hammer. Furthermore, the pressure differences in the evaporator should be considered. This depends on the refrigerant used in the system. The pressure difference in CO_2 systems is much higher compared to NH_3 or Freon, so this further recommends the need for a controlled way of opening valves.

As an example, a generally accepted defrost temperature of 10 °C (50 °F) in CO_2 systems is equal to a pressure of 47.23 bar (685 psi). The pressure of an evaporator at -40 °C (-40 °F) is 10 bar (145 psi). The pressure difference is 37.23 bar (540 psi). A similar situation with NH_3 or R 404a only results in a pressure difference of 5.87 bar (85 psi) and 7.33 bar (106 psi), respectively.

The pressure of the evaporator must be increased slowly. There are several ways to do this with Danfoss valve solutions:

ICSH: Dual position solenoid valve. Step 1 is 20% of the kV value of step 2 and allows a smooth pressure build-up in the evaporator. Steps 1 and 2 are controlled by an EVM pilot valve and, for maximum operating freedom, step 2 can be made dependent or independent of step 1. The steps can be controlled by a PLC where the delay between steps 1 and 2 can be freely set.

ICM: Proportional motor valve type. The valve is controlled by an actuator, ICAD. The ICAD motor is connected to the ICM valve with a magnetic coupling, enabling easy service and maintenance activities without the need to open the ICM valve. The valve is designed to be controlled in 2 ways:

Analogue. The opening degree is controlled, and the lifting height responds proportionally with an analogue input signal (i.e. 0-20/4-20 mA

and 0-10/2-10 V) On/Off. The valve responds to a digital input contact and the opening speed can be set to the requested demand. The valve is fully closed or fully open or moving towards one of these positions.

ICS+EVM: An ICS servo valve with an EVM solenoid valve as pilot valve acting as a solenoid valve step 2 with a small EVRS solenoid as bypass valve acting as step 1.

F: Defrosting phase

During the actual defrost phase, the main purpose is to defrost as efficiently as possible. In this phase, the liquid supply valve (1), wet suction valve (2), and a condensate drain valve for the main hot gas supply line (not shown) are closed. The hot gas supply line valves (3) are open.

At the start of defrosting, the warm hot gas will condense in the evaporator.

During the defrosting cycle, the pressure in the evaporator will gradually rise. This phase must be controlled, otherwise large amounts of uncondensed hot gas (blow-by gas) return to the liquid separator and must be re-compressed by the compressors, decreasing system efficiency.

5.6.5 Controlling the defrost phase:

Pressure-controlled defrost (valve 4)

The pressure control method is the most common method for controlling the defrost pressure in evaporators. The pressure control method is a simple and reliable method, but it is not the most effective. The defrost pressure is controlled at a set pressure corresponding to 7-12 °C (44.6 °F to 53.6 °F) saturated pressure. Valve 4 can be an ICS main control servo valve with a constant pressure CVP-H pilot to control the required defrost pressure. Hot gas will condense in the evaporator and pressure will gradually increase. When the setpoint is reached, the control valve starts to open and control the pressure. During this process, the amount of flash-gas gradually increases, decreasing the system efficiency.

To limit efficiency losses, it is recommended to connect the liquid drain line to the liquid separator with the highest temperature. This liquid separator pressure must be lower than the defrosting control pressure. A check valve must be mounted downstream of the ICS valve to avoid liquid streaming back into the evaporators during a cooling cycle.

Liquid drain control (valve 4)

The liquid drain control method is known as an effective defrosting method. However, it is less common, mainly due to the lack of optimum drain valve solutions, complex installation and rather high cost. The defrost is NOT controlled by pressure, but rather by the presence of liquid condensate. Only when liquid condensate is formed will it be drained by a float valve from the bottom of the evaporator. This solution reduces the possible blow-by gas by approximately 95%.

To make this type of defrost commercially and technically more attractive, Danfoss has designed a float valve function (ICFD) incorporated in the ICF valve. This solution offers a cost effective and very efficient drain solution and simplifies the installation compared with traditional float solutions.

G: Defrost end signal – stabilizing phase

In this phase, all valves are closed and any remaining liquid in the evaporator can drip down and collect at the bottom of the evaporator.

H: Pressure equalization of the evaporator

At this point, the evaporator pressure is still at defrost pressure. And this pressure must be gradually equalized to the pressure of the liquid separator. For a CO_2 system, suppose the defrost temperature at the end of defrost is 12 °C (53.6 °F), which equals a saturated pressure of 47.23 bar (685 psi). The pressure of the liquid separator is -40 °C (-40 °F), which equals a saturated pressure of 10 bar (145 psi). The pressure difference is comparable with the hot gas supply line at the start of defrost, still considerably high, at around 37.25 bar (543 psi). Soft opening valves are strongly recommended here. Several solutions are possible.

ICLX: A 2-step solenoid valve. Steps 1 and 2 are controlled by EVM pilot valves. When step 1 is activated (kV value is at 10% of step 2), the evaporator pressure slowly decreases. Only when the pressure is decreased enough does the valve fully open (step 2).

ICM proportional motor valves can also be used.

I: Droplet freezing phase

To prevent eventually water droplets from being thrown into the cooling space/floor/ceiling it is recommended to freeze them to the evaporator surface. This can be done by delaying the start-up of the fan in freeze mode. When droplets have frozen to the evaporator, the fans are started.

© Danfoss | Climate Solutions | 2022.10

5.6.6 General hot gas defrosting considerations

Hot gas defrost pressure

A popular misconception is that the higher the defrost temperature, the better. In reality, a number of studies (Stoecker, 1983) indicate that a source of lower pressure and temperature gas could obtain good results as well. There is most likely an optimal pressure / temperature (Hoffenbecker, 2005) that would achieve the highest efficiency.

Hot gas defrost time

In industrial refrigeration, it is very typical to set up defrost based on a fixed time adjusted during the startup of the installation. The problem with this approach is that in many cases this time would be on the 'safe side' to ensure a fully clean evaporator. But when the defrost is finished earlier, a consequence is that the efficiency of defrost drops significantly.

Pressure-controlled versus liquid drain control defrost.

The liquid drain method is very important for the energy and time spent on defrosting. The liquid drain method determines how much of the energy bound in the hot gas is used for defrosting the evaporator.

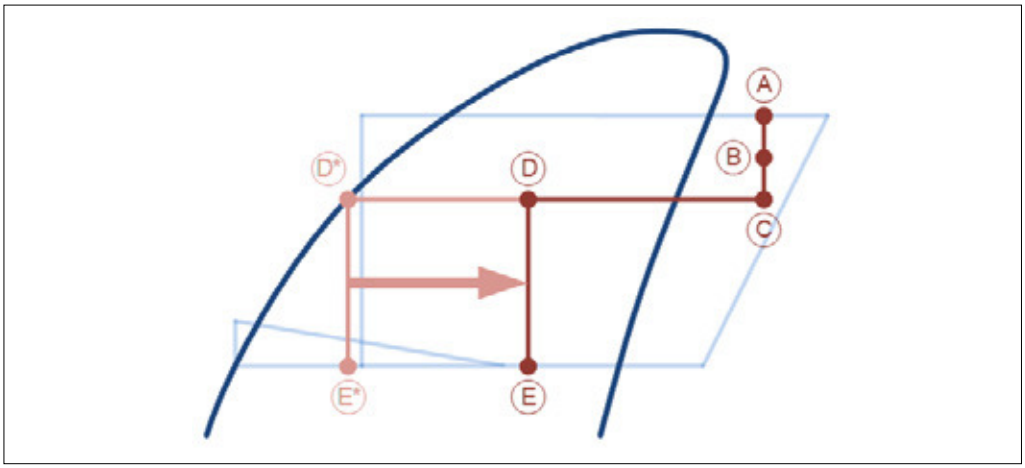

Figure 5.6.3: Quality of the drained liquid

Figure 5.6.3 shows the hot gas defrosting process in a log(p)-h diagram. Comparing Figure 5.6.3 to Figure 5.6.1, the process (A) to (B) shows pressure reduction from the compressor's discharge pressure to the hot gas supply pressure set by the main hot gas supply valve (3) in Figure 5.6.1. The pressure in point (C) is not defined but depends on the components in the hot gas defrost line. Point (D) corresponds to the defrost pressure in the evaporator, however the horizontal position of (D), the dimensioning quality, depends on the liquid drain method. (E) is the evaporator pressure in cooling mode.

Liquid drain controlled defrost:
The dimensioning quality of a liquid drain controlled defrost should be 0.0, as the hot gas will be fully condensed to point (D*). The purpose of a float valve in the defrost drain line is to prevent gas passing through.

Pressure-controlled defrost: Initially all the hot gas supplied to the evaporator will condense, and the drain valve will only see liquid at its inlet. When the temperature in the evaporator has been increased, some gas will not be condensed in the evaporator, and a mixture of liquid and gas will be at the valve inlet. This is the process seen from (D*) to (D) in Figure 5.6.3. Selecting the right dimensioning quality for a pressure-controlled drain is important for selecting the right valve size. A dimensioning quality that is too low will result in a smaller valve, which will prolong the defrost time. If the dimensioning quality is set too high, the valve could be too large, resulting in a lot of gas being bypassed, which results in higher energy consumption for the defrost sequence. Consult Coolselector2 when dimensioning your system's drain valve. Generally, a relatively low dimensioning quality (around 0.05) is recommended when sizing valves for the drain line.

Defrost capacity

The needed amount of hot gas for an efficient defrost depends on the evaporator size, the requested defrost time, and the liquid drain method. As a rule of thumb, the design mass flow (hot gas) for each evaporator requires 2-3 times the required mass flow during the cooling (based on complete evaporation (1:1). The lower the evaporating temperature, the more the ratio goes in the direction of 3. Max. 1/3 of the total number of evaporators in the same installation can be defrosted at the same time (the 'two-to-one rule').

When determining the mass flow needed for the defrost sequence, one should be aware of the capacity of the liquid drain valves and the pressure in the hot gas supply line. They create the defrost pressure graph, which is shown in Figure 5.6.4. On the x-axis, the mass flow of hot gas is shown, which corresponds to the defrost capacity of the hot gas defrosting system, and on the y-axis the pressure is shown.

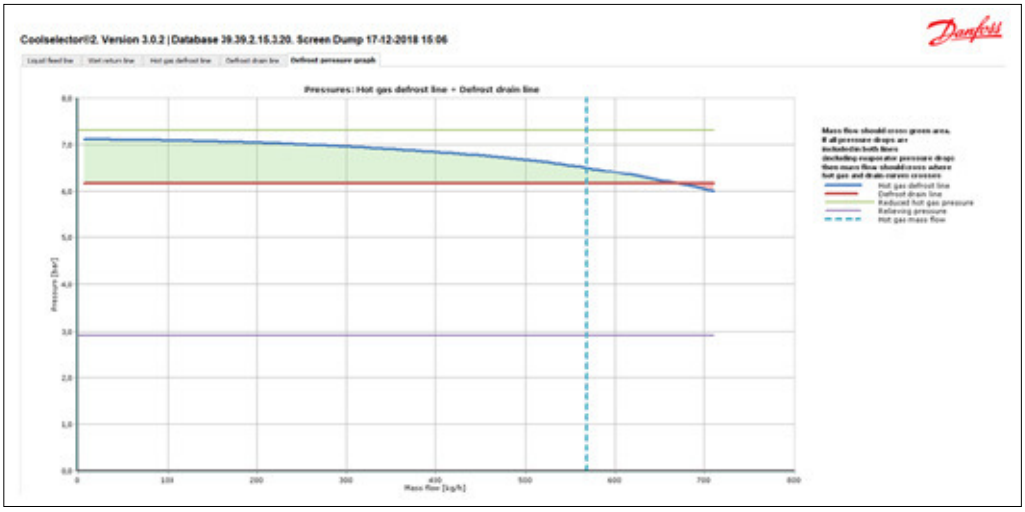

Figure 5.6.4: Defrost pressure graph obtained from Coolselector2

Figure 5.6.4 shows 5 different lines. The vertical broken line is the specified mass flow of hot gas to the evaporator. The green horizontal line is the reduced hot gas pressure (B) from Figure 5.6.3, where the solid blue line is the hot gas defrost pressure at the evaporator inlet (C), the red line is the pressure in the defrost drain line/evaporator outlet (D), and the purple line at the bottom is the relieving pressure (E) corresponding to the evaporator pressure in cooling mode.

The green area between the evaporator inlet and the evaporator outlet shows the pressure drop available for the evaporator during defrost, if no components have been added to the end of the hot gas line to simulate the pressure drop in the evaporator.

For the hot gas system to function properly, it is important that the hot gas mass flow is kept within the green area. If the mass flow should go beyond that area, the following steps can be taken:

- Increase the reduced pressure – and check it against the condensation pressure in the system.
- Decrease the hot gas mass flow – at the cost of a slower defrost.
- Decrease the defrost pressure, and thus the defrost temperature – at the cost of a slower defrost.

A thorough guide to dimensioning the mass flow hot gas defrost lines can be found in the Danfoss calculation tool Coolselector2.

Injecting hot gas

All examples in this document are shown with hot gas injection into evaporators in the top of the evaporator. This method is generally seen as a safe solution with a very low risk for 'liquid hammer'.
Other hot gas injection methods can be used safely, but generally they will require more detailed documentations to ensure safe operation.

Liquid hammer

This is the 'nickname' given to various phenomena that result in high-pressure impact in the system. Two of these are important when designing hot gas defrost systems:

Pressure impact caused by vapour-propelled liquid in gas lines where liquid pockets are present. It can typically occur in hot gas supply and wet return lines. The design should be such that liquid pockets cannot occur and that valves open slowly.

Pressure impact caused by collapsing gas pockets in liquid lines trapped by moving liquid. The impact can be reduced by removing as much liquid as possible from the evaporator prior to defrosting, having a smaller pipe design where possible, slow opening valve procedures, and limited hot gas supply pressure.

Draining condensate from main hot gas lines to avoid liquid hammer

When a hot gas line is not operated, the remaining gases easily condense. It is good practice to install the hot gas lines with slopes, and then install drain facilities at the lowest point. This could be a float valve, i.e. ICF with ICFD, or a periodically activated expansion valve to drain the hot gas pipes and thus avoid liquid hammer.

© Danfoss | Climate Solutions | 2022.10

Maximum operating pressure difference (MOPD)

Automatic control valves like solenoid valves or motor valves require a certain force to enable a smooth opening. The required force depends on the design and system parameters. One important system parameter is the pressure difference across the valve. The greater this is, the more force is required. For solenoid valves, this force depends on the given coil power. For motor valves, this is the available motor power. So, for all valves, the MOPD is a known factor. In CO_2 systems, the pressure difference can be quite considerable. Especially for hot gas supply lines or wet suction, this must be checked. Danfoss solenoid valves, such as ICS with EVM, have a max. MOPD of 40 bar (580 psi) with a 20W AC coil. The MOPD of ICM/ICAD depends on the type chosen.

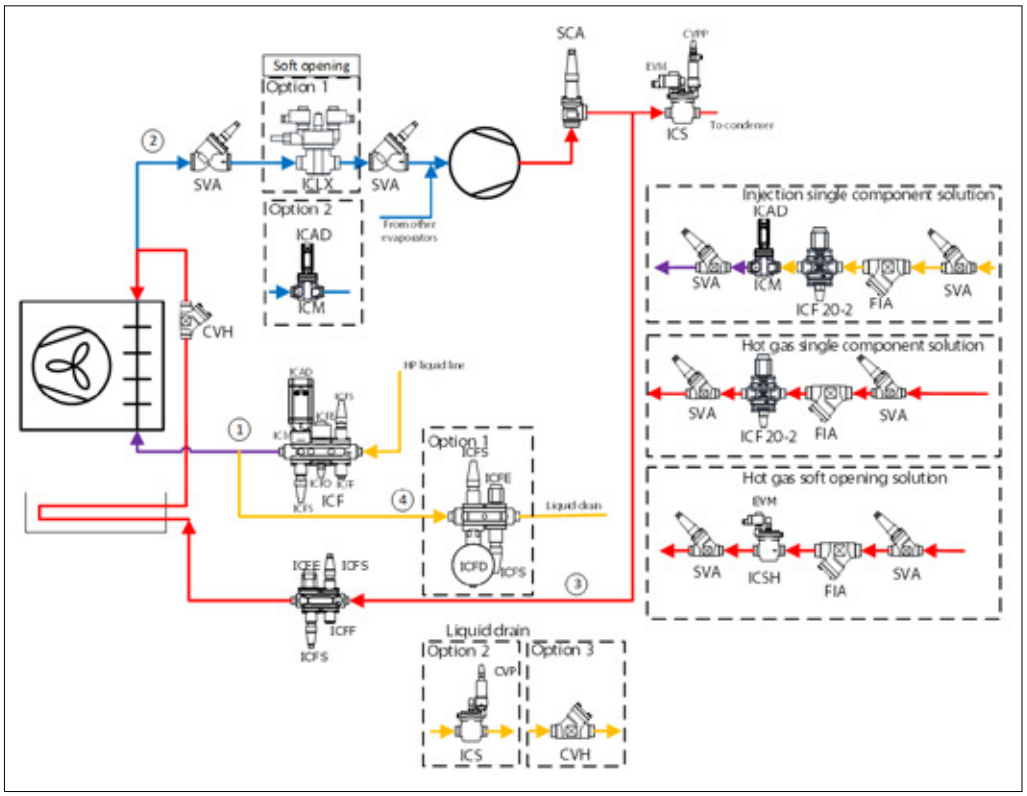

Application Example 5.6.5: DX evaporator with hot gas defrost system

5.6.7 Hot gas defrost for DX evaporators

The Application Example 5.6.5 above is a DX evaporator system with hot gas defrost. The same application is shown on the next page for large-scale systems with the larger sizes of the Danfoss ICF valve station range. The numbering of the lines in this application example follows the numbering of the lines in Figure 5.6.1, hence the lines shown there correspond to the lines shown in the application examples in this chapter. Whilst this method of defrosting is not common, it is even less so for ammonia DX evaporator systems and is more applicable to fluorinated and CO_2 systems. The serial solution for components in the hot gas line and liquid supply line is only applicable for ammonia systems.

Refrigeration Cycle

The solenoid valve, ICFE, in the liquid line is kept open. The liquid injection is controlled by the motor valve ICM.

The two-step solenoid valve ICLX/motor valve ICM in the suction line is kept open, and the defrosting solenoid valve ICFE in the hot gas supply line is kept closed.

The servo valve ICS in the discharge line is kept open by its solenoid valve pilot EVM.

Defrost Cycle

After initiation of the defrost cycle, the liquid injection solenoid valve ICFE/ICF 20-2 in line (1) is closed. The fan is kept running for 120 to 600 seconds, depending on the evaporator size, to pump down the evaporator of liquid.

The fans are stopped and the pilots on the ICLX are de-energized. The servo piston is kept open by the hot gas pressure. However, in cooling mode the hot gas condenses in the cold ICLX valve, so that the servo piston chamber is filled with liquid at hot gas pressure. The pressure between the hot gas and the suction line is equalized by the NO-pilot, when it is de-energized, on the ICLX and the servo piston chamber is slowly drained by the bleed line in the NO-pilot. The equalized pressure between the piston chamber and the suction line lets the main spring push the servo piston down to close the valve.

The exact time taken from when the pilot valves changes position to complete closing of the valve depends on the temperature, pressure, refrigerant and valve size. It is therefore not possible to state an exact closing time for the valves, but lower pressures generally result in longer closing times.

It is very important to take the closing times into consideration when hot gas defrost is used in evaporators.

A further delay of 10 to 20 seconds is required for the liquid in the evaporator to settle down in the bottom without vapour bubbles. The solenoid valve ICFE in the hot gas supply line is then opened and supplies hot gas to the evaporator. As an alternative to the ICFE solenoid valve, an ICSH dual-position solenoid valve can be used to supply hot gas. The benefit of the ICSH dual-position solenoid valve is that it is opened in two steps, which allows a smooth build-up of pressure in the evaporator.

During the defrost cycle, the solenoid valve pilot EVM for the servo valve ICS is closed so that ICS is controlled by the differential pressure pilot CVPP.

The CVPP pilot for the ICS in the discharge line then creates a differential pressure, Δp, between hot gas pressure and the receiver pressure. This pressure drop ensures that the liquid which is condensed during defrosting is forced out into the liquid line through a check valve, CHV.

When the temperature in the evaporator (measured by a temperature sensor, e.g. Danfoss AKS 21) reaches the set value, defrost is terminated. The solenoid valve ICFE in the hot gas supply line is closed, the solenoid valve EVM for ICS in the discharge line is opened, and the two-step solenoid valve ICLX is opened.

Because of the high differential pressure between the evaporator and the suction line after defrosting, it is necessary to use a two-step solenoid valve like the Danfoss ICLX solution. The ICLX two-step solenoid valve will have a capacity of just 10% at high differential pressure, allowing the pressure to be equalized before opening fully to ensure smooth operation and avoid liquid slugging in the suction line.

As an alternative to the ICLX two-step solenoid valve, an ICM motor valve with an ICAD actuator could be used for the soft opening of the suction line. This is recommended for CO_2 systems for more accurate control.

After the ICLX/ICM fully opens, ICFE in the liquid line is opened to restart the refrigeration cycle. The fan is started after a delay in order to freeze remaining liquid droplets on the surface of the evaporator.

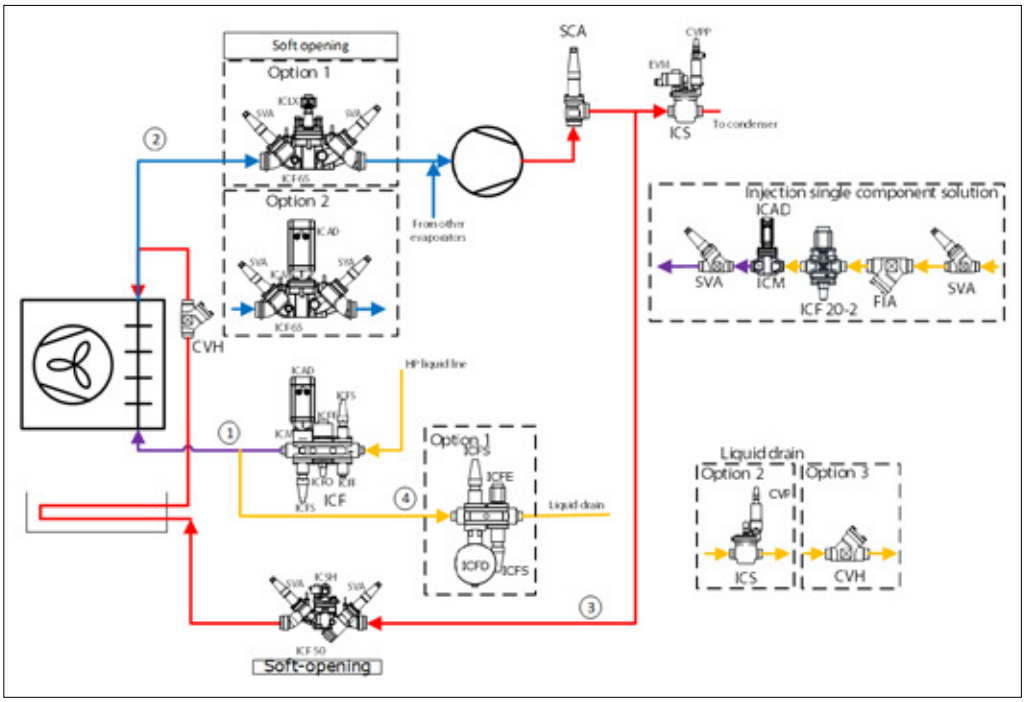

Application Example 5.6.6: DX evaporator with hot gas defrost system for large-scale systems

© Danfoss | Climate Solutions | 2022.10

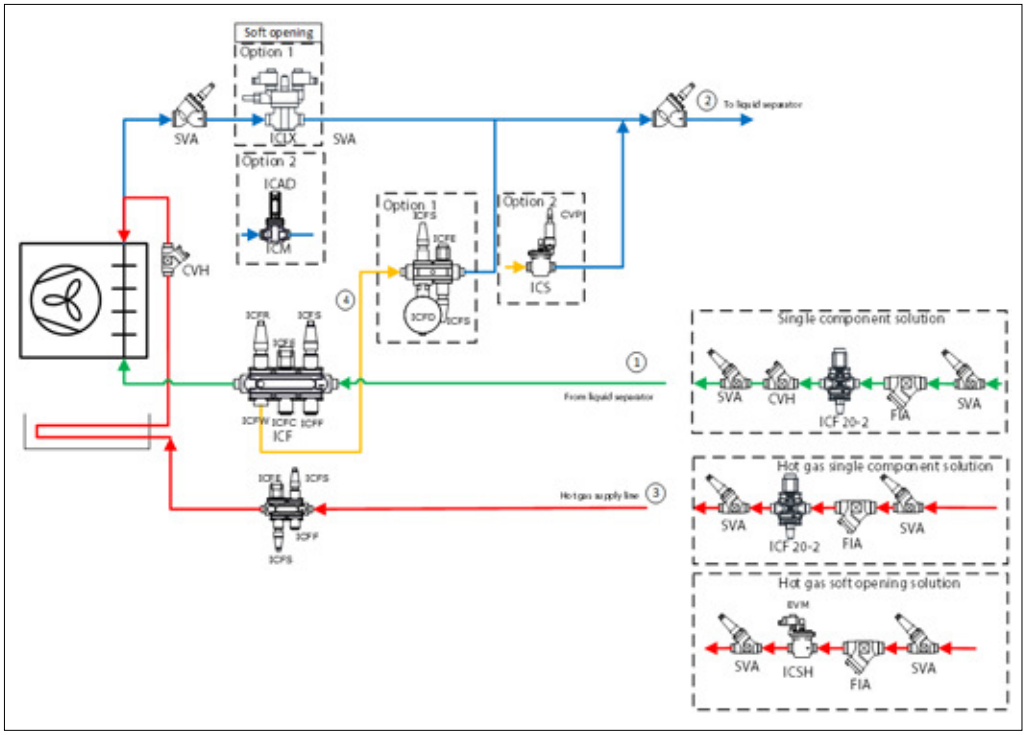

Application Example 5.6.7: Pumped liquid circulation evaporator with hot gas defrost system

5.6.8 Hot gas defrost for pumped liquid circulation evaporators

Application Example 5.6.7 shows the typical installation options for pumped liquid circulation evaporators with hot gas defrost systems. This application example is shown with ICF valve stations which can accommodate up to 6 modules in the same housing. The same application is shown on the next page for large-scale systems with the larger sizes of the Danfoss ICF valve station range. The numbering of the lines in this application example follows the numbering of the lines in Figure 5.6.1, hence the lines shown there correspond to the lines shown in the application examples in this chapter. The application can also be made with components in a serial connection instead, which is only applicable for ammonia systems.

Refrigeration Cycle

The solenoid valve ICFE/ICF 20-2 on the liquid line (line (1)) is kept open. The liquid injection is controlled by the manual regulating valve ICFR/REG.

The two-step solenoid valve ICLX in the suction line is kept open (alternatively, an ICM motor valve can be used instead of an ICLX), and the defrosting solenoid valve ICFE/ICF 20-2 is kept closed. It is recommended that an ICM motor valve be used for soft-opening in the wet suction line for CO_2 systems.

Defrost Cycle

After initiation of the defrost cycle, the liquid supply solenoid ICFE is closed. The fan is kept running for 120 to 600 seconds, depending on the evaporator size, to pump down the evaporator of liquid.

The fans are stopped and the pilots on the ICLX are de-energized. The servo piston is kept open by the hot gas pressure. However, in cooling mode the hot gas condenses in the cold ICLX valve, so that the servo piston chamber is filled with liquid at hot gas pressure. The pressure between the hot gas and the suction line is equalized by the NO-pilot, when it is de-energized, on the ICLX and the servo piston chamber is slowly drained by the bleed line in the NO-pilot. The equalized pressure between the piston chamber and the suction line lets the main spring push the servo piston down to close the valve.

The exact time taken from when the pilot valves change position to complete closing of the valve depends on the temperature, pressure, refrigerant and valve size. It is therefore not possible to state an exact closing time for the valves, but lower pressures generally result in longer closing times.

It is very important to take the closing times into consideration when hot gas defrost is used in evaporators.

A further delay of 10 to 20 seconds is required for the liquid in the evaporator to settle down in the bottom without vapour bubbles. The solenoid valve ICFE/ICF 20-2 in the hot gas supply line is then opened and supplies hot gas to the evaporator. As an alternative to the ICFE solenoid valve, an ICSH dual-position solenoid valve can be used to supply hot gas. The benefit of the ICSH dual-position solenoid valve is that it is opened in 2 steps, which allows a smooth build-up of pressure in the evaporator.

During the defrost cycle, the opening degree of the high-pressure float valve ICFD in the liquid drain line is controlled by the level of condensed hot gas in the ICFD module. The ICFD module only drains liquid to the low-pressure side (wet return line). Uncondensed gas can bypass the ICFD through a small gas-bypass orifice. The ICFD solution can reduce the blow-by gas by 90%. The ICFD solution can also be replaced with a back-pressure controlled servo valve, ICS+CVP.

When the temperature in the evaporator (measured by temperature sensor, e.g. Danfoss AKS 21) reaches the set value, defrost is terminated, the solenoid valve ICFE in the hot gas supply line is closed, and the two-step solenoid valve ICLX/ICM motor valve is opened.

Because of the high differential pressure between the evaporator and the suction line, it is necessary to relieve the pressure slowly, allowing the pressure to be equalized before opening fully to ensure smooth operation and avoid liquid slugging in the suction line.

After the ICLX/ICM fully opens, the liquid supply solenoid valve ICFE in the liquid feed line is opened to start the refrigeration cycle. The fan is started after a delay to freeze remaining liquid droplets on the surface of the evaporator.

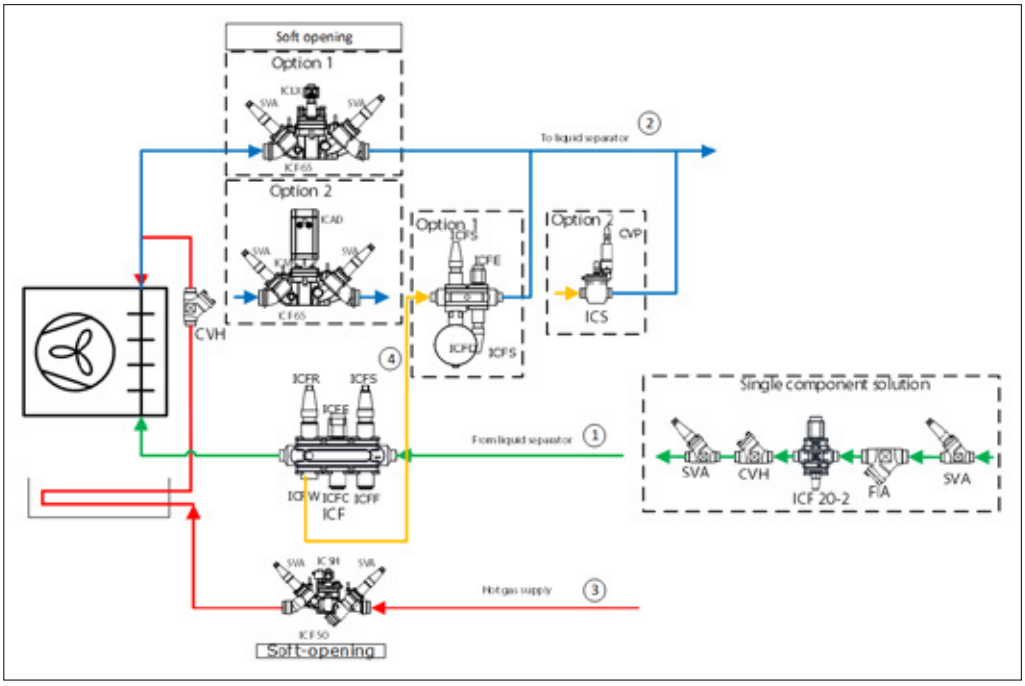

Application Example 5.6.8: Pumped liquid circulation evaporator with hot gas defrost system

5.6.9 Special application: Defrosting of plate freezers

Hot gas defrosting of plate freezers differs somewhat from defrosting an air cooler. The defrosting of a plate freezer is primarily necessary to remove the frozen product from the freezer and thus the defrosting is part of the production cycle. For this reason, the defrosting of a plate freezer should be as fast as possible. Furthermore, the product is in contact with the plate freezer and a fast and well-controlled defrost is essential for product quality. A bad defrost can partially thaw the product, which reduces the quality significantly.

Usually the defrosting should be performed in less than 3 minutes, which is the main difference from air coolers where the defrost time is significantly longer.

As with air coolers, the defrosting of a plate freezer can be controlled by a float valve or by back pressure, where the float valve control is recommended as it provides defrosting with the lowest possible plate temperature, ensuring the best product quality. However, it should be noted that, as the defrosting capacity of a plate freezer is very high, the ICFD is not always sufficiently large. Alternatively, an ICM main valve controlled by an AKS 4100 level transmitter can function as a float valve. It is a more complex and expensive solution. However, many plate freezers can be serviced by a single ICM with AKS 4100 combination.

The defrosting cycle is slightly different to the defrosting cycle for air coolers. In particular, the time spent to 'pump down' the evaporator is simply not available. Instead, the hot gas is applied (with a soft opening) and the pressure is used to push the liquid out of the plate freezer. In this function, the float valve-controlled defrost is an advantage. The actual defrosting starts once the freezer has been emptied. The defrosting is usually ended by a timer, but in some cases the defrosting pressure in the freezer is used to determine when the plate is above the freezing point.

© Danfoss | Climate Solutions | 2022.10

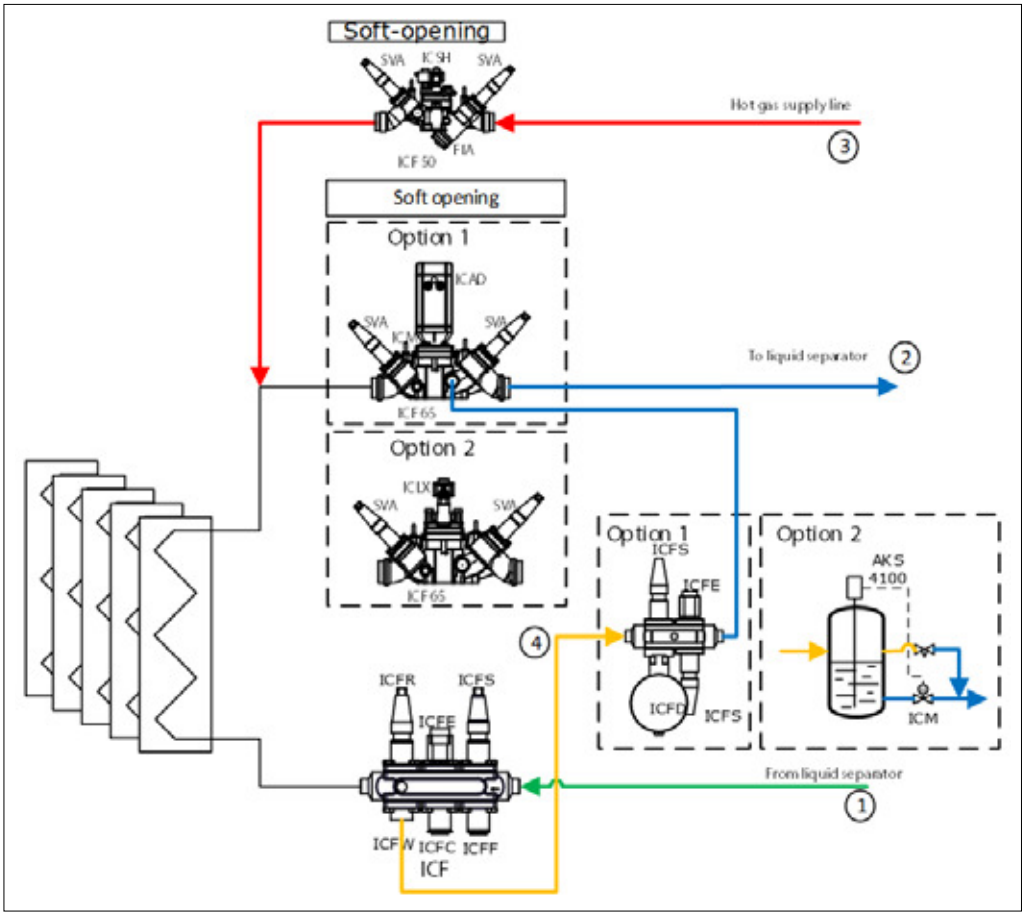

Application Example 5.6.9: Pumped plate freezer with hot gas defrost system

The solutions shown in the broken-line boxes are options that depend on the cooling capacity of the plate freezer and the refrigerant. In the wet return line (2), ICF-65 with ICM (option 1) is recommended for ammonia and CO_2 systems, since the alternative, ICLX, has a long closing time, which must be considered when defrosting a plate freezer. The extended closing time of the ICLX can lead to bypassing hot gas to the wet suction line, which increases the energy consumption for the defrosting sequence. The ICF-65 with ICLX (option 2) can be used if the defrosting time of the plate freezer is less critical for the quality of the frozen product in the plate freezer. In the liquid drain line (4), use of the ICFD module (option 1) is limited by the defrost capacity/demand of the plate freezer and the refrigerant. The ICFD module is available for ammonia and CO_2 systems. Consult Coolselector2 to examine the limits of the ICFD solution. Option 2 for the liquid drain line (4) is sending the condensate to a vessel with a liquid level transmitter, AKS 4100. A regulating valve allows gas to bypass to avoid increasing the pressure in the vessel, while a motor valve, ICM, is controlled by the level transmitter to drain liquid from the vessel. This solution would be the alternative for CO_2 systems, until the ICFD is approved for CO_2.

5.7 Summary

Solution		Application	Benefit	Limitations
Temperature Controls – see section 5.1				
Media temperature control with ICS, CVE and CVP	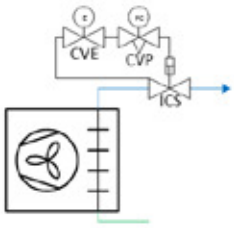	Very precise temperature control combined with minimum pressure (frost) protection. Options of running at different temperatures.	The CVE/ICAD will precisely control the temperature. CVP can keep the pressure above the required lowest level.	Pressure drop in suction line.
Media temperature control with motor valve ICM	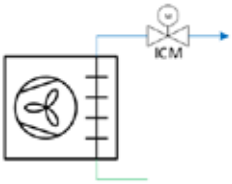	Very precise temperature control. Option of running at different temperatures.	The ICM will control the temperature very accurately, by adjusting the opening degree.	Maximum capacity is ICM 150.
Multi-temperature control with ICS and CVP	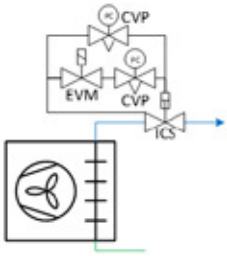	Applicable to all compressors with the ability to run at reduced speed.	Low start-up current Energy savings Lower noise Longer lifetime Simplified installation.	Pressure drop in suction line.
Liquid Supply Controls – see section 5.2				
DX evaporator with thermostatic expansion control	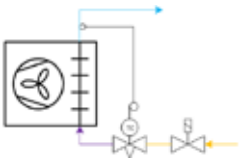	All DX systems	Simple installation without separator and pump system.	Lower capacity and efficiency than circulated systems. Not suitable for flammable refrigerants.
DX evaporator with electronic expansion control with ICM/ICF solution	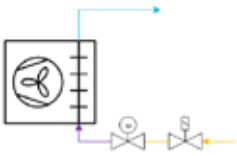	All DX systems	Optimized superheat, quick response, possible to control remotely, wide capacity range.	Not suitable for flammable refrigerants.
Pumped liquid circulation evaporator with solenoid valve or pulse-width-modulated AKVA valve	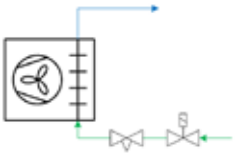	Pump circulating systems	High capacity and efficient evaporator.	Fluctuations, and high refrigerant charge. Fewer fluctuations when using the AKVA solution.
Hot Gas Defrosting Controls – see section 5.6.3				
DX evaporator with hot gas defrost	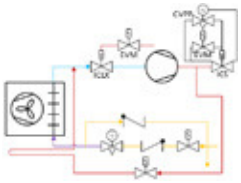	All DX systems	Quick defrost. The hot gas can bring out the oil left in the low-temperature evaporator.	Not applicable for systems with fewer than 3 evaporators.
Pumped liquid circulation evaporator with hot gas defrost with ICFD (back-pressure control is alternative as shown in the broken-line box)	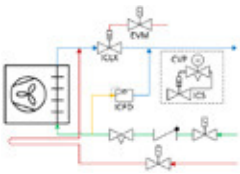	All pumped circulated systems	Quick defrost. The hot gas can bring out the oil left in the low-temperature evaporator. The float valve is efficient and stable in regulating the hot gas flow. Blow-by gas is reduced.	Not applicable for systems with fewer than 3 evaporators.

© Danfoss | Climate Solutions | 2022.10

6. Oil systems

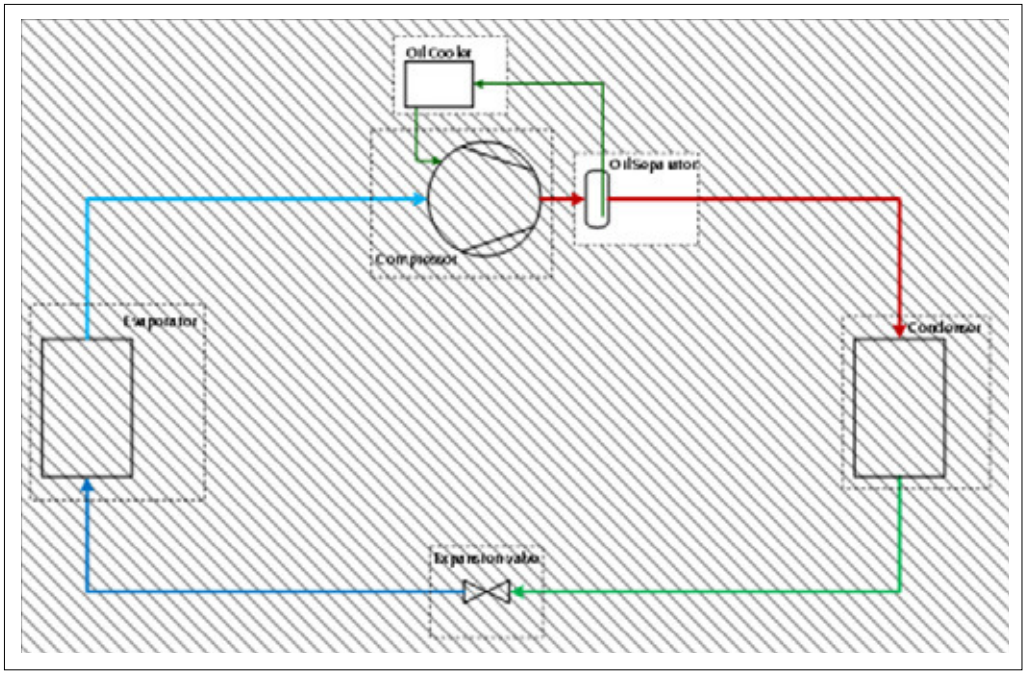

Generally, industrial refrigeration compressors are lubricated with oil, which is forced by the oil pump or by the pressure difference between the high and the low-pressure sides to the moving parts of the compressors (bearings, rotors, cylinder walls etc.). To guarantee reliable and efficient operation of the compressor, the following oil parameters should be controlled:

Oil temperature. This should be kept within the limits specified by the manufacturer to avoid degradation of the oil. The oil should have the correct viscosity and the discharge temperature from the compressor should be kept below the temperatures at which the oil starts to decompose.

Oil pressure. Oil pressure difference should be kept above the minimum acceptable level specified by the compressor manufacturer.

There are generally some supporting components and equipment within refrigeration systems for oil cleaning, oil separation from the refrigerant, oil return from the low-pressure side, equalization of the oil level in systems with several piston compressors and oil drain-off points. Most of these are supplied by the compressor manufacturer.

The oil system design of an industrial refrigeration plant depends on the type of compressor (screw or piston) and on the refrigerant (ammonia, HFC or CO_2). An immiscible oil type is generally used for ammonia, and a miscible one for fluorinated refrigerants and CO_2. As oil systems are very closely related to compressors, some of the above-mentioned points have been described in Compressor controls (section 2) and Safety systems (section 7).

6.1 Oil cooling controls

Refrigeration compressors (including all screw compressors and some piston compressors) generally require oil cooling. Discharge temperatures that are too high can destroy oil, which leads to damage of the compressor. It is also important for the oil to have the right viscosity, which is heavily dependent on the temperature level. It is not enough just to keep the temperature below the critical limit, it is also necessary to control it. The oil temperature is usually specified by the compressor manufacturer.

There are a few different types of oil cooling systems used in refrigeration. The most common types are:

- water cooling
- air cooling
- refrigerant cooling

Oil can also be cooled by means of injection of the liquid refrigerant directly into the intermediate compressor port. For piston compressors, it is quite common not to have any special oil cooling systems at all, as temperature is less critical than for screw compressors, with the oil being cooled in the crankcase of the piston compressor.

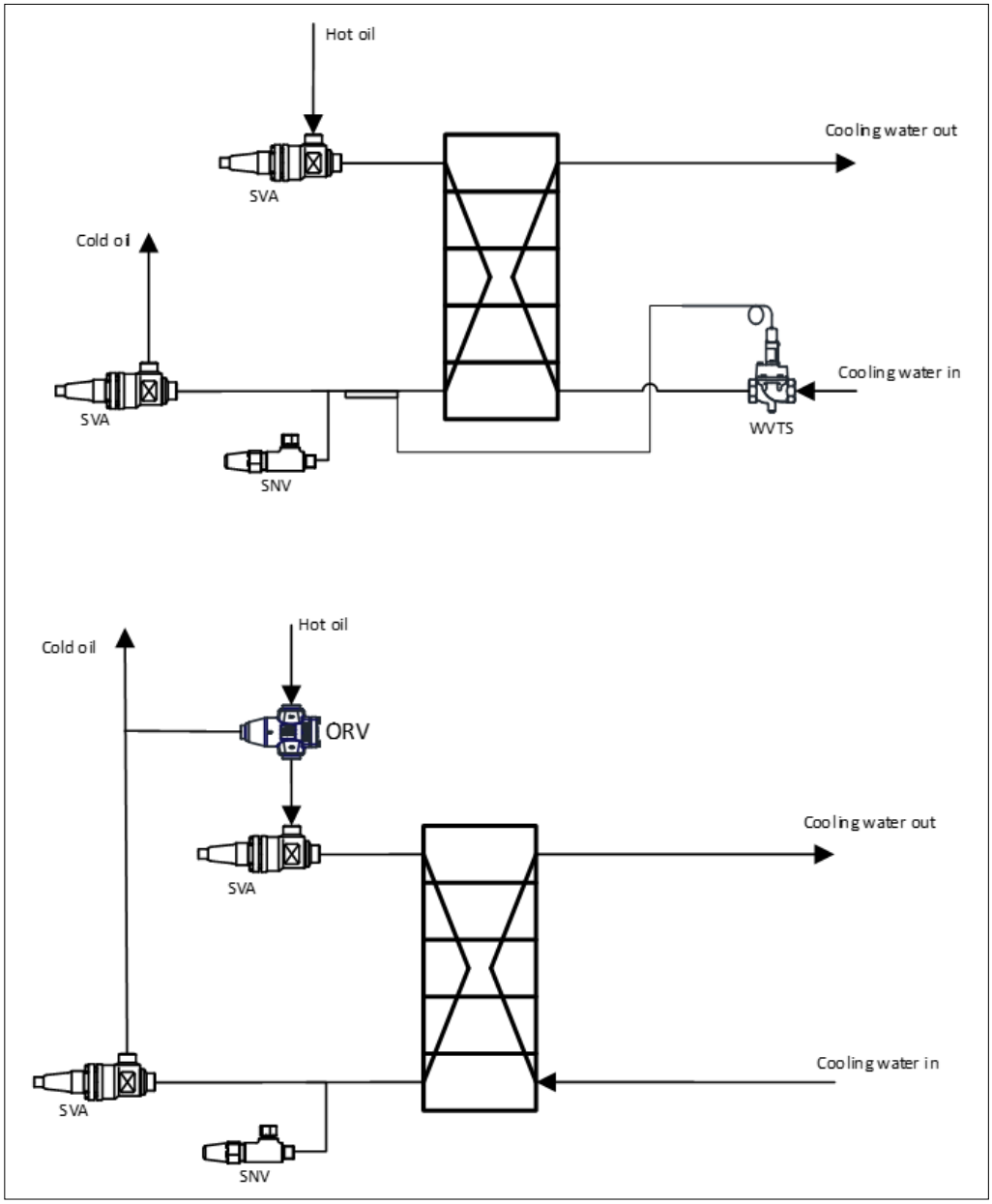

Application Example 6.1.1: Oil cooling with water or brine

These types of systems are normally used in plants where it is possible to get a cheap water source. Otherwise, it is necessary to install a cooling tower to cool down the water. Water-cooled oil coolers are quite common for marine refrigeration plants.

The water flow is controlled by the water valve type WVTS, which controls the water flow according to the oil temperature.

An alternative is to equip the hot oil line with a three-way oil regulating valve, ORV. The ORV three-way valve can be used as a diverting valve or a mixing valve. The ORV is used to bypass hot oil from the separator to adjust the oil return temperature, without regulating the water flow.

The SNV safety relief valves are mounted with blanking plugs on their outlets and must always remain so.

Please contact your local Danfoss sales company to check the suitability of components to be used with sea water as the cooling medium.

© Danfoss | Climate Solutions | 2022.10

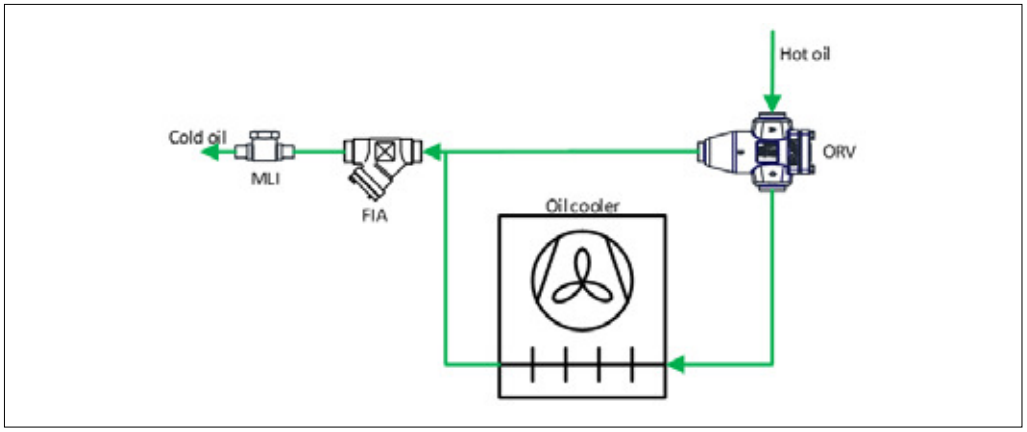

Application Example 6.1.2: Oil cooling with air

It is quite common to use air-cooled oil coolers on the compressor units with semi-hermetic screw compressor refrigeration packs. Typical oil return temperatures are in the range of 50-60 °C – well above ambient temperatures in most parts of the world.

The ORV is used as a diverting three-way valve to bypass hot oil (uncooled oil from separator) to compensate for low ambient temperatures that could result in excessively low oil return temperatures.

The oil temperature valve is controlled by the oil regulating valve ORV.

In this case, the ORV divides the flow from the oil separator and regulates based on the change in oil return temperature.

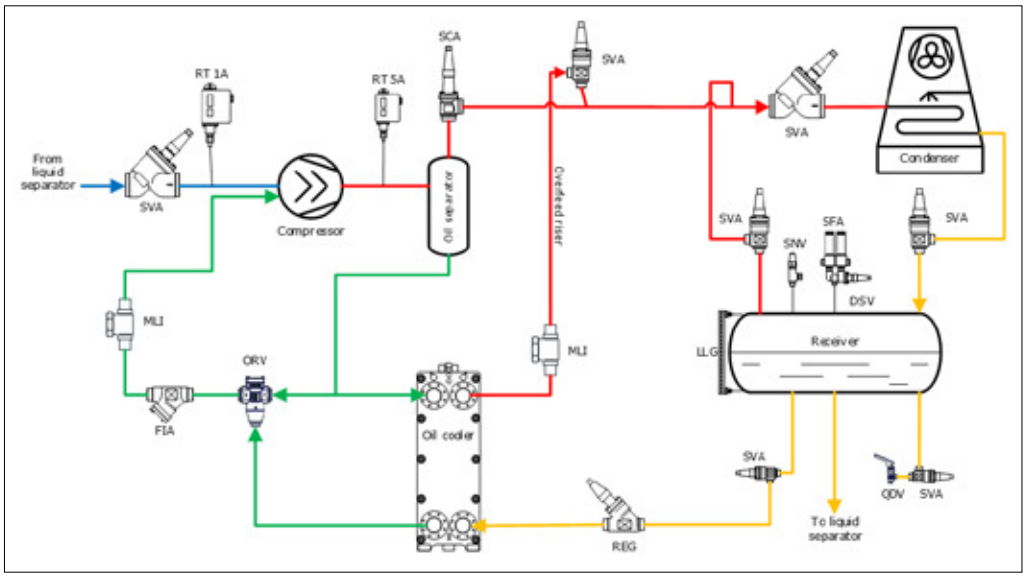

Application Example 6.1.3: Refrigerant oil cooling

These types of systems are very convenient, as oil is cooled inside the system. It is only necessary to oversize the condenser for the amount of heat taken from the oil cooler. Conversely, Refrigerant oil cooling requires additional piping on site and it is sometimes also necessary to install an additional priority vessel (in cases where the HP liquid receiver is placed too low or not installed). In the case above, the feed pipe to the liquid separator is placed at a certain height above the bottom of the receiver vessel to create a priority for the oil cooler that is drained from the bottom of the receiver.

High-pressure liquid refrigerant flows from the receiver due to gravity into the oil cooler, where it evaporates and cools the oil. It is therefore important to dimension the overfeed risers properly according to the refrigerant flow needed for the oil cooler and pressure losses in the risers. Otherwise the refrigerant will not return from the oil cooler and the system will not function correctly. Only a minimal number of SVA stop valves should be installed. No pressure-dependent solenoid valves are permitted. On the return pipe, installation of a sight glass is recommended.

The oil temperature is maintained at the correct level by the oil regulating valve (ORV), a three-way valve. The ORV keeps the oil temperature within the limits defined by its thermostatic element. If the oil temperature rises too high, then all the oil will return to the oil cooler. If it is too low, then all the oil flow is bypassed around the oil cooler.

6.2 Oil differential pressure controls

During normal running of the refrigeration compressor, oil is circulated by the oil pump and/or pressure difference between the HP and LP sides. The most critical phase is during start-up.

It is vital to have a quick build-up of oil pressure, otherwise the compressor may be damaged.

There are two basic ways to quickly build up oil differential pressure in the refrigeration compressor.

The first is to use an external oil pump, and the second is to install a control valve on the compressor discharge line after the oil separator.

For the latter method, it is necessary to check if the compressor manufacturer allows a few seconds of dry operation. Normally, this is possible for screw compressors with ball bearings, but not possible for those with slide bearings.

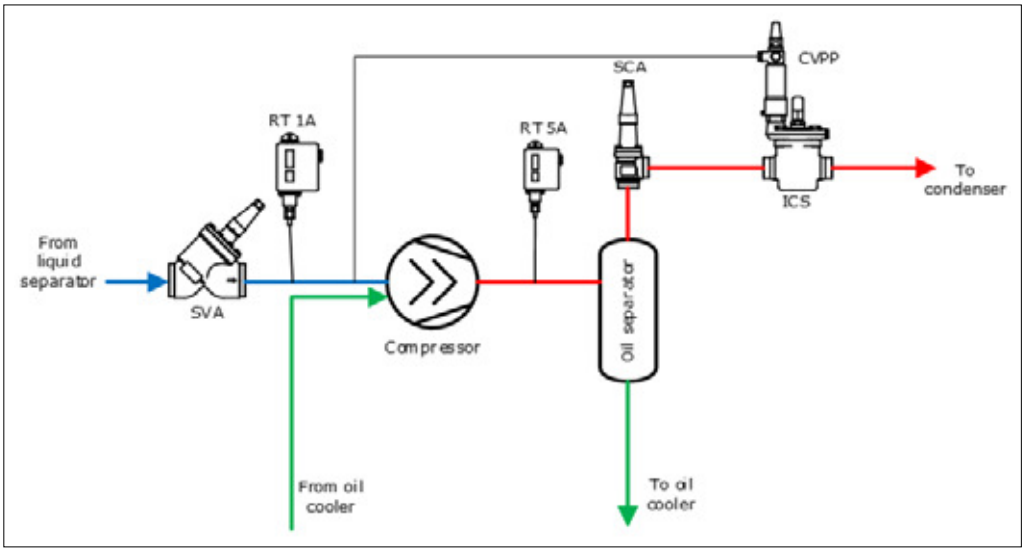

Application Example 6.2.1: Oil differential pressure control with ICS and CVPP

In this application, a servo-operated valve, ICS, complete with differential pilot, CVPP, should be used. The pilot line from the CVPP valve is connected to the suction line. ICS is closed when the compressor is started up.

As the piping between the compressor and the valve is very short, the discharge pressure increases rapidly. It requires very little time before the valve fully opens and the compressor runs at normal conditions.

The main advantage of this solution is its flexibility, as differential pressure can be readjusted on site and, using other pilots, the ICS can also serve some other functions.

In areas with a very low ambient temperature, an excessively high setpoint of the differential pressure pilot valve (CVPP) will result in no benefit from the lower condensation temperature, since the compressor will need to provide the required discharge pressure to open the pilot valve.

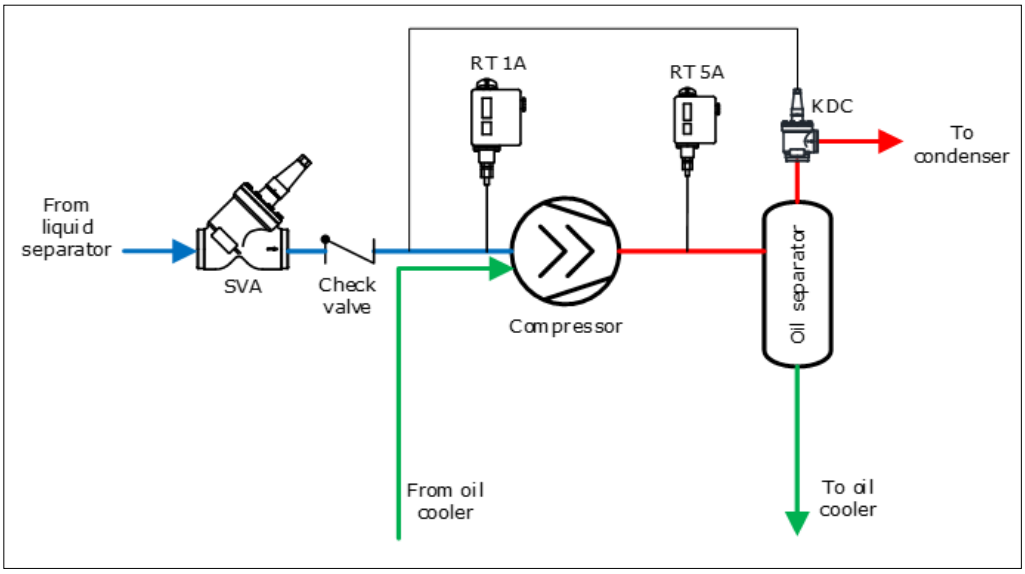

Application Example 6.2.2: Oil differential pressure control with KDC

© Danfoss | Climate Solutions | 2022.10

The principle of operation for this example is the same as for Application Example 6.2.1. The multifunctional compressor valve (KDC) opens when the pressure difference between the discharge line and the suction line exceeds the setting value and, at the same time, the pressure in the oil separator is greater than the condensing pressure.

However, the KDC also has some limitations. The valve is not adjustable and there are a limited number of differential pressure settings available, and it is necessary to have a check valve in the suction line.

If this check valve is not present, there could be a very large reverse flow through the compressor from the oil separator. It is not permitted to have a check valve between the compressor and oil separator; otherwise it may take too long for the KDC to close.

The multifunctional compressor valve, KDC, has two primary functions, which are described below. The steps of the KDC valve are shown in the figure below:

Pressure control function: The KDC valve is a pressure control valve. The valve controls the discharge pressure of the compressor to ensure fast build-up of pressure and oil pressure.

Check valve function: The valve also ensures against backwards flow when the cone initially is in closed position (step 1), and the differential pressure across the cone increases. The pressure in the cone is connected to the suction pressure. The valve remains closed when the valve moves to step 2.

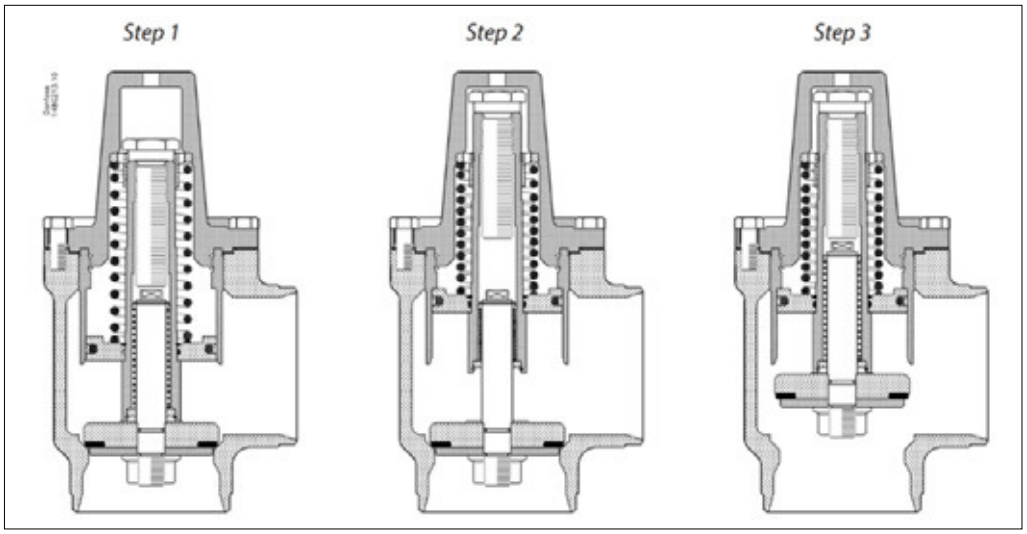

Figure 6.2: KDC Check Valve Steps

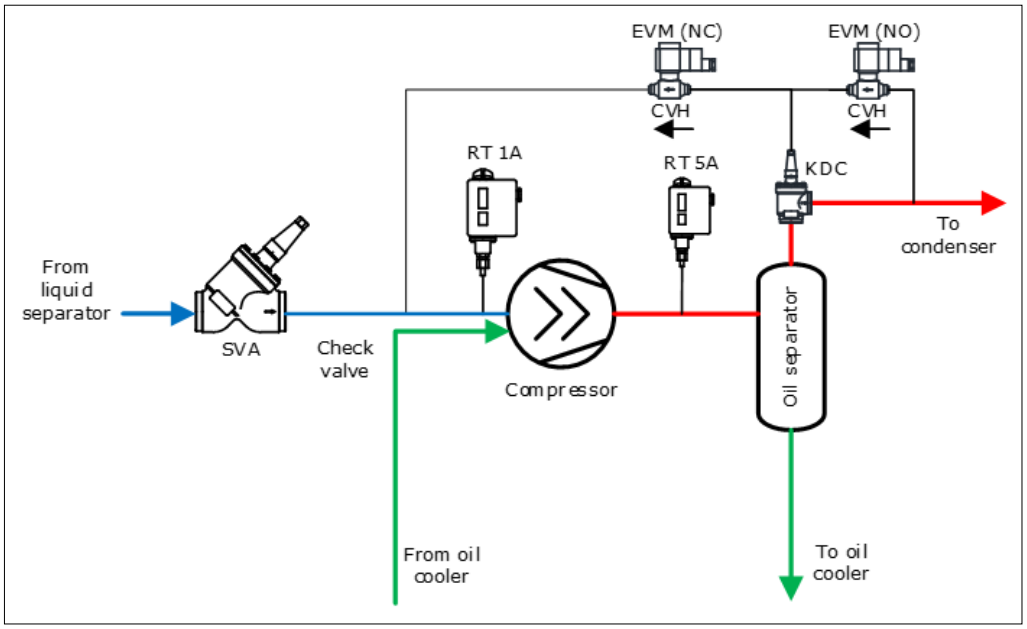

Application Example 6.2.3: Oil differential pressure control with KDC and EVM pilots

When there is no possibility to install a check valve in the suction line or there is a check valve in the line between the compressor and the oil separator, it is possible to use the KDC valve equipped with EVM solenoid pilot valves.

This solution minimizes the pressure drop in the suction line compared to the solution shown in Application Example 6.2.2.

These EVM pilots are installed in external lines using CVH bodies, as illustrated. The EVM solenoid pilot connected to the suction line is a normally closed (NC) solenoid valve and the EVM connected to the condensing pressure is a normally open (NO) solenoid valve.
During startup of the compressor, the system works as in the previous example (Application Example 6.2.2).

When the compressor stops, EVM NC should be closed and EVM NO opens. That equalizes the pressure over the KDC spring, and it closes.

Please note the installation direction of the CVH and EVM pilot valves.

6.3 Oil recovery system

The compressors within industrial refrigeration systems are generally the only components that require oil lubrication. Therefore, the function of the compressor oil separator is to prevent any of the lubricating oil passing into the refrigeration system.

However, oil can be carried over through the oil separator into the refrigeration system and often collects in the low-pressure side in liquid separators and evaporators, decreasing their efficiency.

If too much oil carries over from the compressor into the system, the amount of oil in the compressor will be reduced and there is then a risk of the oil level falling below the minimum limit set by the compressor manufacturer.

Oil return systems are primarily used together with refrigerants that can be mixed with the oil e.g. HFC/HCFC systems.

Oil rectifiers are used for refrigerants which do mix with oil. The oil and liquid refrigerant mixture is drained from the liquid separator and heated by hot liquid from the condenser in a heat exchanger. The oil and refrigerant are separated by evaporating the refrigerant, so that the oil can be recovered.

The oil return system can therefore have two functions:

- To remove oil from the low-pressure side.
- To feed the oil back to the compressor.

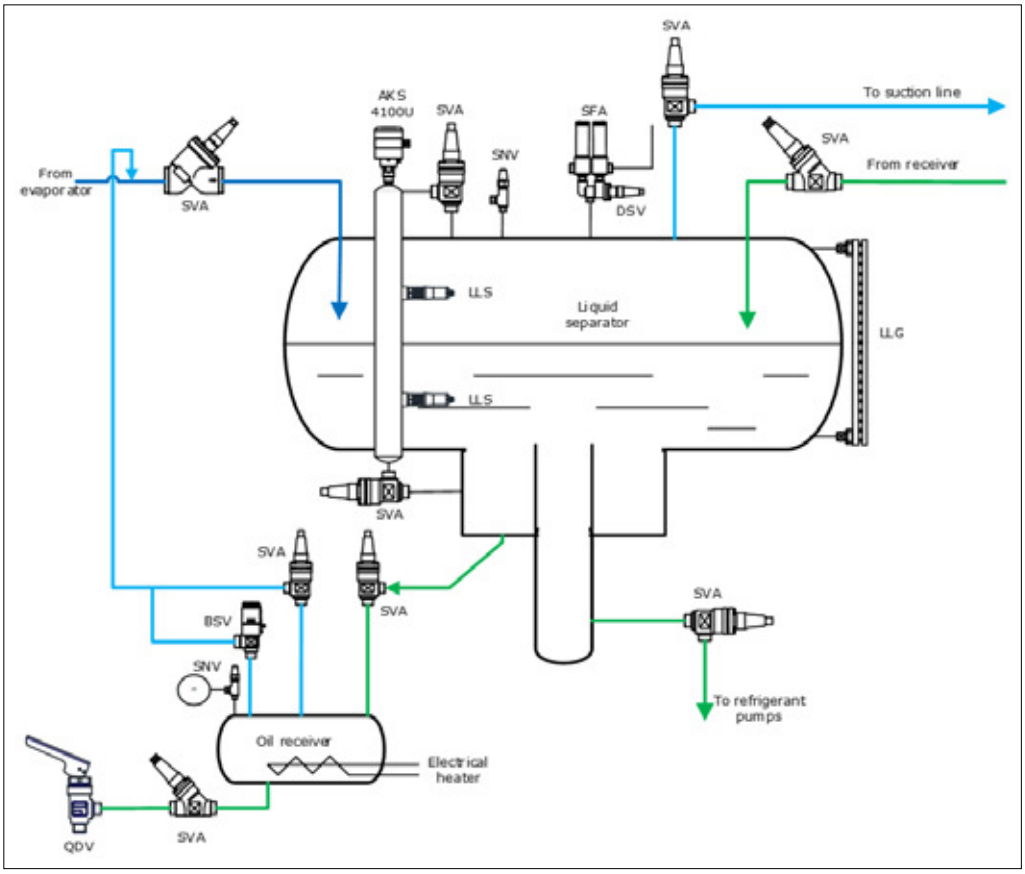

Application Example 6.3.1: Oil drain from ammonia systems

© Danfoss | Climate Solutions | 2022.10

In ammonia systems, immiscible oil is used. As the oil is heavier than liquid ammonia, it stays at the bottom of the liquid separator and is unable to return to the compressor via the suction line.

Therefore, oil in ammonia systems is normally drained from the liquid separator into an oil receiver. This makes the separation of oil from ammonia easier.

First, check that ventilation fans are operating in the area from which oil is drained. Before draining the oil, close the stop valve from the separator to the oil receiver. Turn on the electric heating coil to warm up the oil. Let ammonia liquid in the oil receiver boil off to the wet return line, before draining the oil.

When the ammonia in the oil receiver has been boiled off, the stop valve SVA between the oil receiver and the wet return line is closed.

Make sure that oil can be drained to a bucket or vessel before opening the drain valve. Ensure that the pressure in the oil receiver is above atmospheric pressure. Open the stop valve up-stream of the QDV valve approx. one turn. Then slowly press down the handle on the quick-closing oil drain valve, QDV. Do not mechanically block the handle of the QDV in the open position. If the oil drain rate is not satisfactory, adjust the opening degree of the SVA valve up-stream of the QDV valve accordingly. Close the stop valve up-stream of the QDV valve when all the oil has been drained. When the SVA between the QDV and the oil receiver is closed, re-open the QDV for sufficient time to allow any trapped liquid to be drained.

When the oil has been drained, re-open the SVA between the separator and oil receiver and the SVA between the oil receiver and the wet return line.

Measure and note down the amount of drained oil.

It is, however, extremely important to be aware that any oil removed from the low-pressure side of the ammonia cooling system is usually unsuitable for further use with the compressor and should be discarded.

Necessary precautions during drainage of oil from ammonia should be taken to avoid draining large amounts of ammonia. Safety equipment must be used when draining oil from the receiver.

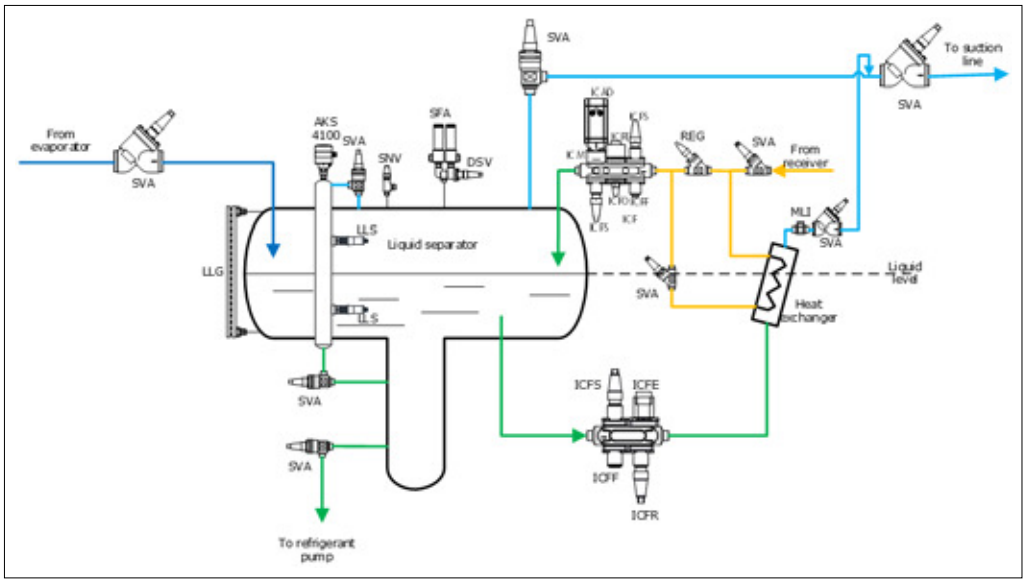

Application Example 6.3.2: Oil drain from fluorinated systems and CO_2 systems

In fluorinated and CO_2 systems, miscible oil is predominantly used. In a DX system, oil recovery is not a problem as the oil is returned in the suction line, provided good piping practice is followed (slopes, oil loops, speed etc.).

However, in flooded systems oil recovery requires the use of an oil rectifier as the oil accumulates in the low-pressure separator. An oil rectifier is a small heat exchanger that evaporates part of the (relatively oil-rich) refrigerant liquid in the separator and returns the oil content to the suction line or an oil collection vessel. The heat for the evaporation process is usually provided by the liquid for the expansion device, making the oil rectifier energy-neutral.

In the system above, the refrigerant moves from the liquid separator into the heat exchanger by gravity.

Low-pressure refrigerant is heated up by high-pressure liquid refrigerant and evaporates.

The evaporated refrigerant gas mixed with oil returns to the suction line. Refrigerant from the liquid separator is taken from the working level.

The regulating valve ICFR in the oil/refrigerant mixture line is adjusted in such a way that there are no drops of liquid refrigerant seen in the sight glass, to ensure superheat of the oil/refrigerant mixture. The superheated refrigerant gas will entrain the flow of oil back to the compressor.

Refrigerant could also be taken from pump discharge lines, making the oil rectifier work in DX mode. Taking refrigerant from the pump discharge line is shown in Application Example 6.3.3.

An ICF valve station is used with an ICFA solenoid module which is a PWM (pulse width modulation) electronic expansion valve.

The EKC 315A superheat controller ensures that the refrigerant/oil mixture is superheated when leaving the oil rectifier.

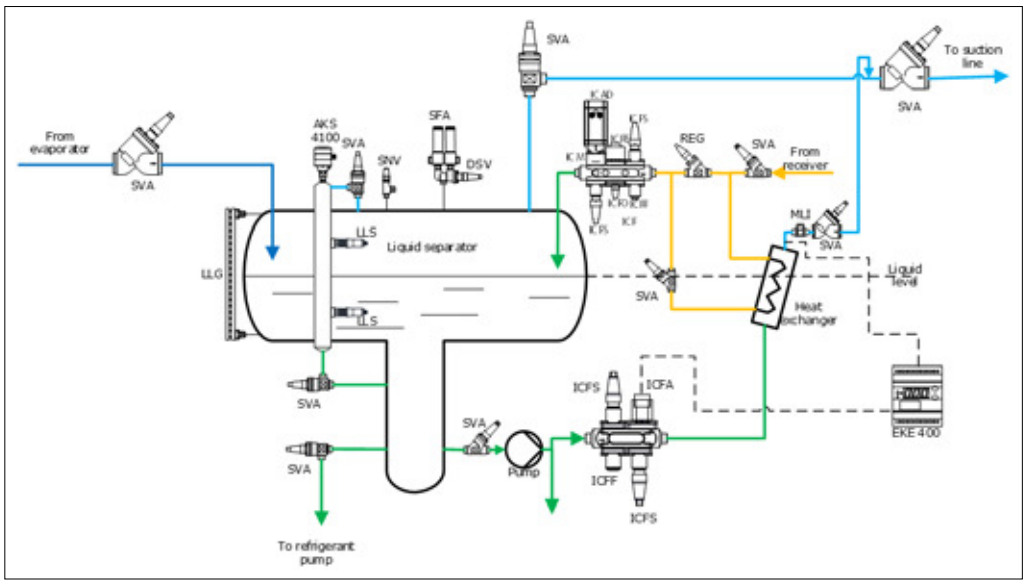

Application Example 6.3.3: Oil drain from fluorinated system and CO_2 systems with drain from pump discharge line

© Danfoss | Climate Solutions | 2022.10

6.4 Summary

Solution		Application	Benefit	Limitations
Oil Cooling Controls – see section 1.1				
Water cooling with WVTS water valve or with three-way oil regulating valve, ORV	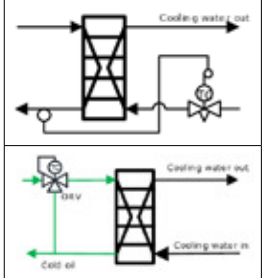	Marine installations, plants where an inexpensive cold-water source is available	Simple and efficient	Could be expensive, requires separate water piping
Air cooling with three-way oil regulating valve, ORV	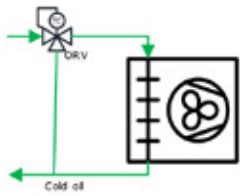	'Heavy commercial' refrigeration systems with power packs	Simple, no additional piping or water required	Big fluctuations in oil temperature possible in different seasons; Air coolers might be too big for large installations
Thermosyphon cooling with three-way oil regulating valve, ORV	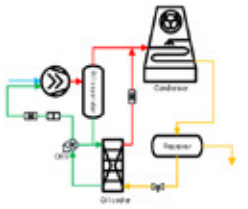	All types of refrigeration plants	Oil is cooled by refrigerant without loss of cooling capacity	Requires extra piping and priority vessel for HP liquid refrigerant.
Oil Differential Pressure Controls – see section 1.1				
Differential pressure controlled by ICS solution	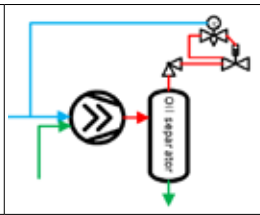	Screw compressor (should be confirmed by the compressor manufacturer)	Flexible, different settings possible	Requires installation of check valve
Controlled by the multifunctional compressor valve, KDC	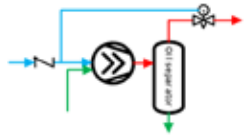		Requires no discharge check valve, pressure drop lower than ICS solution	It is necessary to install check valve in the suction line, no change of setting possible
Controlled by a KDC with solenoid pilot valves.	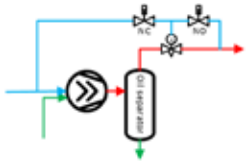		Same as above, but installation of check valve in suction line is not necessary	Requires external piping, no change of setting possible
Oil Recovery System – see section 1.1				
Oil recovery for ammonia systems with a quick drain valve, QDV	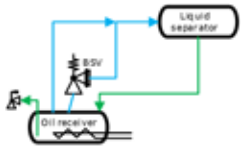	All ammonia systems	Simple, but should be handled with great care	Requires manual operating
Oil recovery for fluorinated and CO_2 systems with a heat exchanger – oil rectifier	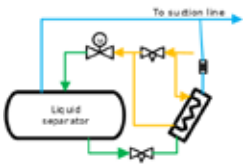	Low temperature fluorinated systems. Can either be natural circulation or pumped system	Does not require manual operation. Superheat can be controlled by EKC 315A for pumped systems	Complicated to adjust for natural circulation.

7. Safety systems

All industrial refrigeration systems are designed with different safety systems to protect them against unsafe conditions, such as excessive pressure. Any foreseeable excessive internal pressure should be prevented or relieved with minimum risk to people, property and the environment.

Requirements for the safety systems are heavily controlled by authorities, and it is therefore always necessary to verify the requirements in the local legislation in various countries. The illustrations in this chapter generally reflect the EN 13136 standard, but some should be regarded as 'best practice'.

Pressure relief device, e.g. pressure relief valve, is designed to relieve excessive pressure automatically at a pressure not exceeding the permissible limit and reseat after the pressure has fallen below the permissible limit.

Temperature limiting device or temperature limiter is a temperature actuated device that is designed to avoid unsafe temperatures so that the system can be stopped partly or completely in case of a defect or malfunction.

Pressure limiter is a device that protects against high or low pressure with automatic resetting.

Safety pressure cut-out are safety switches that are designed for limiting the pressure with manual resetting.

Differential pressure cut-out is a device that measures the minimum differential pressure for safe operation of a pump or a compressor. Pump cavitation can be detected through excessively low differential pressure and the pump must be stopped. Insufficient oil differential pressure in a compressor can lead to insufficient lubrication and requires the compressor to be stopped.

Liquid level cut-out is a liquid level actuated device designed to prevent unsafe liquid levels.

Refrigerant detector is a sensing device which responds to a pre-set concentration of refrigerant gas in the environment. Danfoss produces GD-type refrigerant detectors type, please see specific application guide for more information.

7.1 Pressure relief devices

Safety valves are installed to prevent the pressure in the system from rising above the maximum allowable pressure of any component and the system as a whole. In case of excessive pressure, safety valves relieve refrigerant from the refrigeration system.

The main parameters for safety valves are the relief pressure and reseating pressure. Normally the relief pressure should not exceed more than 10% of the set pressures. Furthermore, if the valve does not reseat or reseats at too low a pressure, there can be significant loss of system refrigerant.

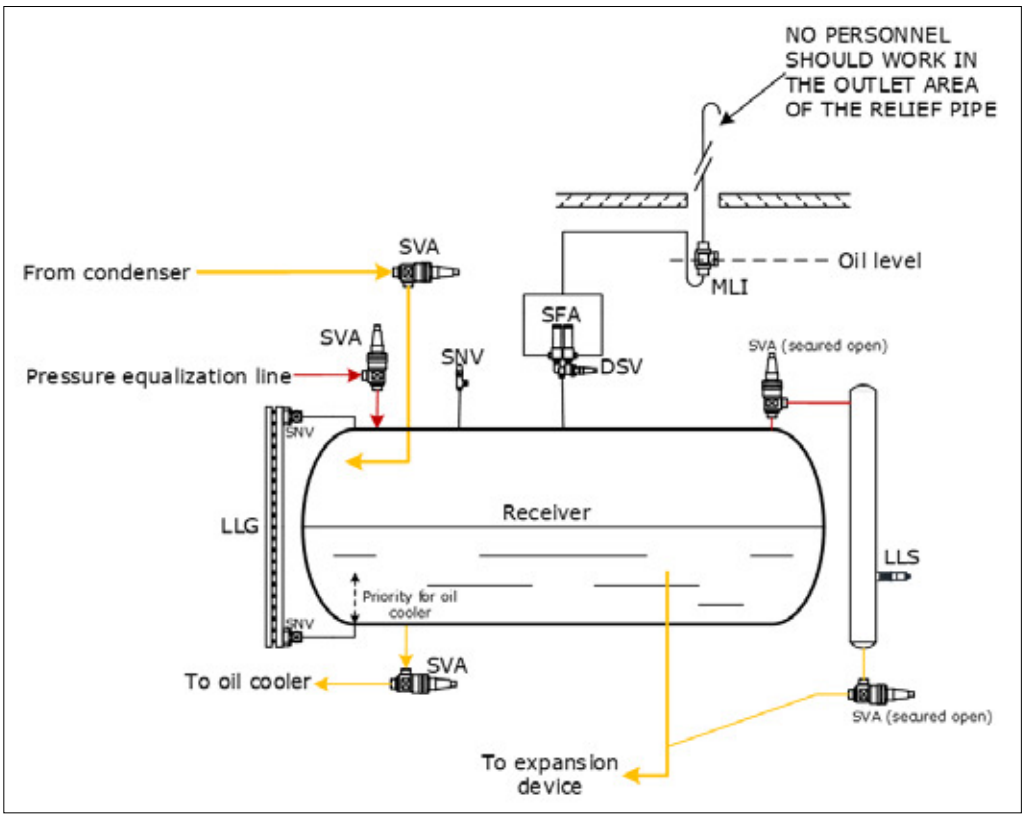

Application Example 7.1.1: Safety valve SFA+DSV

© Danfoss | Climate Solutions | 2022.10

Pressure relief devices should be installed on all vessels in the systems, as well as on compressors.

Generally, back pressure-dependent safety relief valves (SFA) are used. Safety valves should be installed with a changeover valve DSV, to enable the servicing of one valve whilst the other is still in operation. As only one of the two safety valves is active at a time, they should both be dimensioned to the full relief capacity.

Pressure relief devices should be mounted close to the part of the system they are protecting. To check if the relief valve has discharged to the atmosphere, a u-trap filled with oil and with a sight glass mounted can be installed after the valve.

For vessels, the safety valves must be sized based on the size of the external surface, e.g. according to EN 13136, ISO 5149, ANSI IIAR2 (depending on the locally applicable standard). For compressors, the safety valve must be dimensioned according to the compressor flow, again according to EN 13136, ISO 625, ANSI IIAR2 or another local standard.

CoolSelector2 can dimension valves and lines in accordance with EN 13136 and ISO 5149.

Generally, the safety valve set pressure must be the minimum of the maximum pressures of the components in the section it services.

Please note: Some countries do not allow installation of a u-trap in relief pipes.

The relief pipe from the safety valve should be designed in such a way that people are not endangered in the event that refrigerant is relieved.

A pressure drop in the relief pipe to the safety valves is important for the function of the valves. Check the applicable standards for recommendations on how to size these pipes.

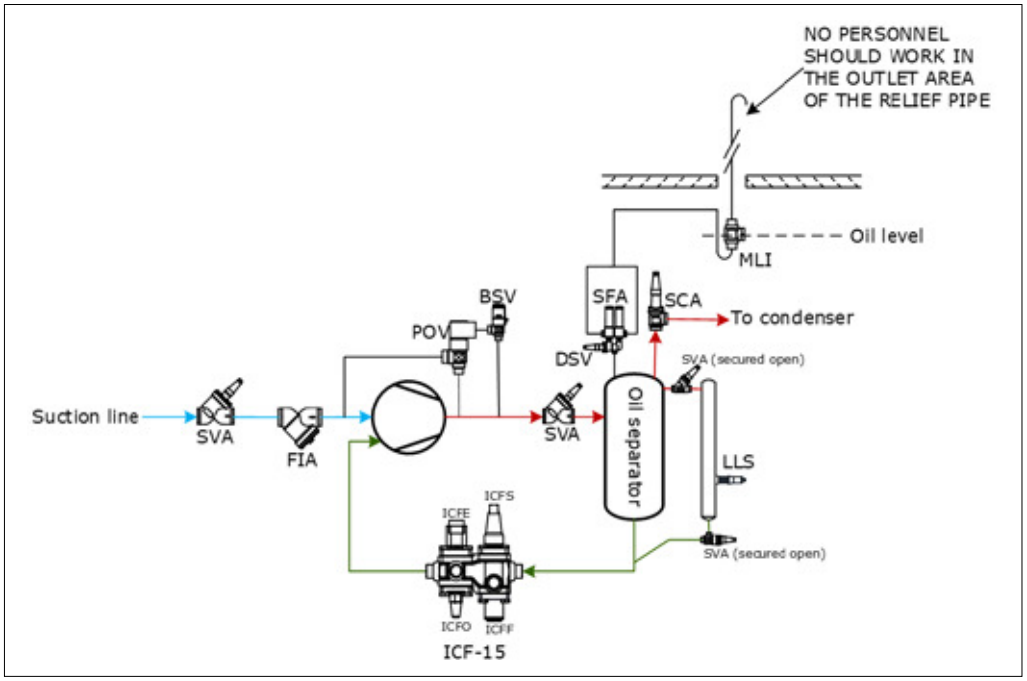

Application Example 7.1.2: Interval safety valves - BSV and POV

To relieve refrigerant from the high-pressure side to the low-pressure side, only back pressure-independent relief valves should be used (BSV/ POV).

BSV can act either as a direct relief valve with low capacity or as a pilot valve for the POV main valve. When the discharge pressure exceeds the set pressure, BSV will open the POV to relieve high-pressure vapour into the low-pressure side.

BSV and POV must be sized according to the discharge volume flow of the compressor at relief conditions.

The back pressure-independent relief valves are installed without changeover valve. If it becomes necessary to replace or readjust the valves, the compressor must be stopped.

In many cases, an oil separator can be considered a vessel and it must be protected accordingly. In cases where the oil separator is not considered a vessel but can be separated with stop valves from the condenser and compressor safety valves, then it also requires a separate safety valve.

This protection can be achieved with standard safety relief valves SFA combined with a changeover valve DSV.

Safety valves must be sized according to the size of the external surface, e.g. in accordance with EN 13136, ISO 5149, ANSI IIAR2 (depending on the locally applicable standard).

LLSs can be mounted in the oil separator to detect overfilling or an excessively low oil level.

7.2 Pressure and temperature limiting devices

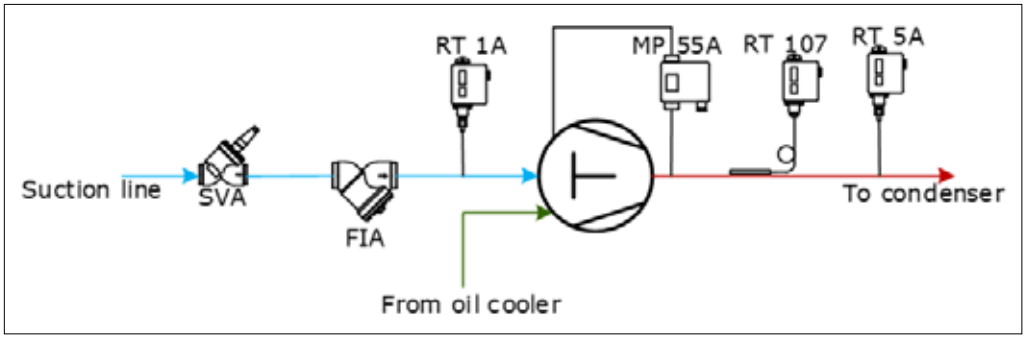

Application Example 7.2.1: Pressure/temperature cut-out for compressors

To protect the compressor from an excessively high discharge pressure and temperature, or an excessively low suction pressure, KP/RT switches are used. RT1A is a low-pressure control, RT 5A is a high-pressure control, and RT 107 is a thermostat.

These controls are for the protection of the compressor against operation outside of the approved operating limits, and as such do NOT replace normal safety valves.

Setting of the high-pressure controls should be below the setting of the safety valves on the high-pressure side. The setting on the low-pressure switch is specified by the compressor manufacture.

For piston compressors, the oil differential switch MP 54/55 is used to stop the compressors if oil pressure becomes too low, which can result in insufficient lubrication of the compressor.

The oil differential switch cuts out the compressor if, after a defined period of time (0-120 s), it does not build up enough differential pressure for sufficient lubrication during start-up.

These controls are often part of the compressor package/control, but if they are not, they should be as shown here.

7.3 Liquid level safety devices

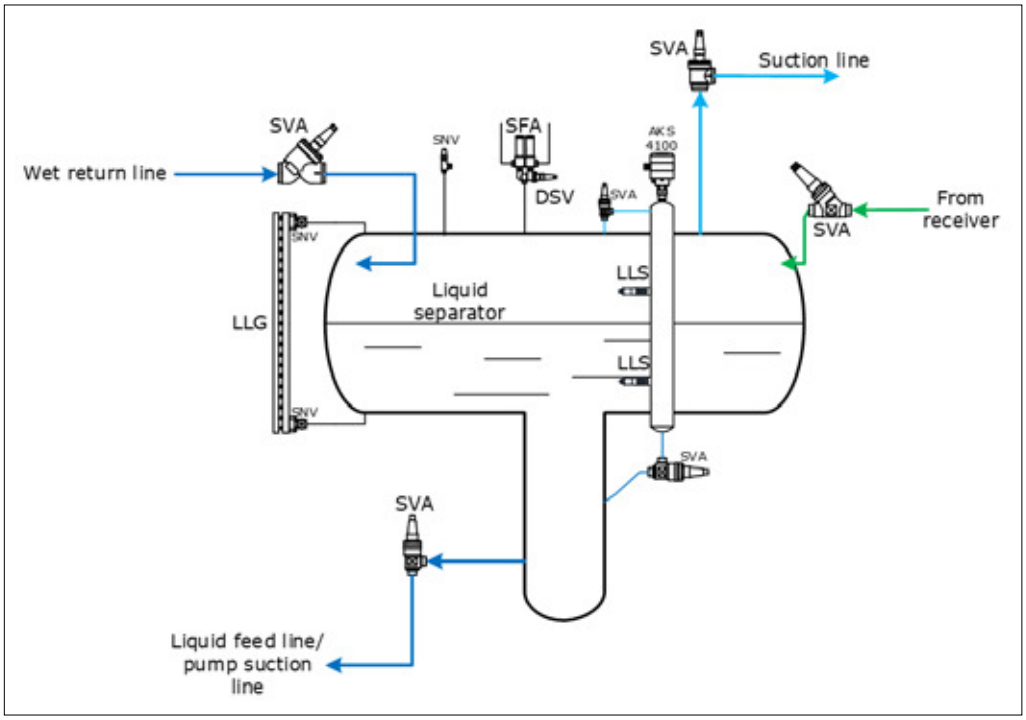

Application Example 7.3.1: Low/high level switches for liquid separator

Vessels on the high-pressure side and low-pressure side have different liquid level switches.

High-pressure receivers only need to have a low level switch (LLS 4000) in order to guarantee minimum refrigerant level to feed expansion devices.

The sight glass (LLG) for visual monitoring of the liquid level can also be installed. In case of low temperatures, the LLG might ice up heavily and in those cases it is recommended that the sight adapter be mounted to ensure a visual inspection of the liquid level despite the build-up of ice.

© Danfoss | Climate Solutions | 2022.10

Low-pressure vessels normally have both low and high-level switches. The low-level switch is installed to make sure that there is sufficient head of refrigerant to avoid cavitation of pumps.

A high-level switch is installed to protect compressors against liquid in the suction line (sufficient liquid separation).

Safety valves must be sized according to the size of the external surface, e.g. in accordance with EN 13136, ISO 5149, ANSI IIAR2 (depending on the locally applicable standard).

Note that lower connection of the LLS 4000 / AKS 4100 standpipe slopes down to avoid oil build-up in the standpipe, which can result in erroneous level measurement and/or incorrect function of the switches/level indicator.

7.4 Refrigerant detection

Gas detection equipment is usually used in a fixed installation with a number of sensors located in areas where refrigerant might be expected to accumulate in the event of a plant leak.

These locations depend on the layout of the machinery room and adjacent spaces, on the configuration of the plant and on the refrigerant in question.

- Which gases need to be measured and in what quantities?
- Which sensor principle is the most suitable?
- How many sensors are needed?
- Where and how should the sensors be positioned and calibrated?
- Which alarm limits are appropriate? How many are required? How is the alarm information processed?

Danfoss offers a wide range of gas detection equipment. See GD documentation for detailed information.

7.4.1 Sensor technology

Based on the refrigerant and actual ppm range required, Danfoss has selected the appropriate sensors for the target refrigerant gas.

Which sensor is suitable for a given refrigerant?

	Semi-conductor	Electro-chemical	Pellistor (Catalytic)	Infrared
Ammonia 'low' concentration (< 100 ppm)	–	✓	–	–
Ammonia 'medium' concentration (< 1000 ppm)[1]	(✓)	✓	–	–
Ammonia 'high' concentration (< 10000 ppm)	✓	(✓)[2]	(✓)	–
Ammonia 'very high' concentration (> 10000 ppm)	–	–	✓	–
Carbon dioxide CO_2	–	–	–	✓
Hydrocarbons HC	–	–	✓	–
Halocarbons HCFC & HFC	✓	–	–	–

[1] Measuring range 0-1000 ppm. Can be adjusted in the whole range.

[2] Up to 5000 ppm. For specific applications.

✓ **Best solution** (✓) **Suitable – but less attractive** – **Not suitable**

7.4.2 Actions triggered by gas detection

The actions to be triggered when leaked refrigerant is detected depends on the standard applied. National regulations, especially the 'Occupational Exposure Limits', vary from country to country.

Actions for Ammonia – R717	EN 378:2016	ISO 5149:2014	ASHRAE 34 2016	IIAR 2-2014
Up to 50 kg (110 lb) refrigerant	At max. 157 ppm: Actuate an alarm Notify authorized person Audible buzzer 15 dBA above background noise level Flashing lamp Alarm inside the room For machinery rooms: Also outside the room, which can be at a supervised location For machinery rooms: Start emergency ventilation		At max. 1000 ppm: Audible and visual alarm Inside machinery room and outside each entrance Start mechanical ventilation Shut down combustion processes drawing air from the room (unless the combustion is driving the compressor)	Machinery rooms at max. 25 ppm: Audible and visual alarm Inside the machinery room and outside each entrance Alarm to monitored location Stop non-emergency ventilation (unless it is designed to work with R717) Machine rooms at max. 150 ppm also: Start emergency ventilation Machine rooms at max. 40000 ppm, also: De-energize compressors, refrigerant pumps, and normally closed valves Not in machinery rooms at max. 25 ppm: Alarm to monitored location Other actions depend on system type and location
More than 50 kg (110 lb) refrigerant	Same actions as above, but starting at max. 500 ppm At max. 30000 ppm also: Stop the system Stop the power supply to everything which is not Ex approved	Same actions as above, but starting at max. 200 ppm At max. 30000 ppm also: Stop the system Stop the power supply to everything which is not Ex approved		
More than 3000 kg (6613 lb) refrigerant	Same as above, but also Central alarm system Specialized personnel on site within 60 min of alarm			
More than 4500 kg (9920 lb) refrigerant		Same as above, but also Central alarm system Specialized personnel on site within 60 min of alarm		

Actions for refrigerants other than ammonia	EN 378:2016	ISO 5149:2014	ASHRAE 34 2016
For all systems except ventilated enclosures and systems using alternative risk management	At 50% ATEL/ODL/RCL or 25% LFL (see Danfoss Application Guide – Gas detection in refrigeration systems - Annex II): For flammable refrigerants: Stop the system Notify an authorized person Audible buzzer 15 dBA above background noise level Flashing lamp Alarm inside the room For occupancy A: Also outside the room, which shall be at a supervised location For occupancy B and C: Only inside is needed For machinery rooms: Also outside the room, which can be at a supervised location For machinery rooms: Start emergency ventilation		At OEL (see Danfoss Application Guide – Gas detection in refrigeration systems - Annex III): Audible and visual alarm Inside the machine room and outside each entrance Start mechanical ventilation Shut down combustion processes drawing air from the room (unless refrigerant is R744)
For ventilated enclosures	If a detector is used for starting ventilation: Start ventilation at 25% LFL (see Danfoss Application Guide – Gas detection in refrigeration systems - Annex II)		Not applicable
For systems using alternative risk management	If a detector is used for starting ventilation: Start ventilation at 50% ATEL/ODL/RCL or 25% LFL (see Danfoss Application Guide – Gas detection in refrigeration systems - Annex II)		Not applicable

© Danfoss | Climate Solutions | 2022.10

7.4.3 References

EN 378:2016 Refrigerating systems and heat pumps – Safety and environmental requirements

ASHRAE 15:2016 Safety Standard for Refrigeration Systems

ASHRAE 34:2016 Designation and Safety Classification of Refrigerants

ANSI/IIAR 2-2014 American National Standard for Safe Design of Closed-Circuit Ammonia Refrigeration Systems

ISO 5149:2014 Refrigerating systems and heat pumps – Safety and environmental requirements

EU F-Gas Regulation (EC) No 517/2014

Danfoss gas detector documentation (www.danfoss.com/ir)

7.4.4 Summary

Solution		Application
Pressure relief devices – see section 7.1		
Safety valves SFA + change over valve DSV	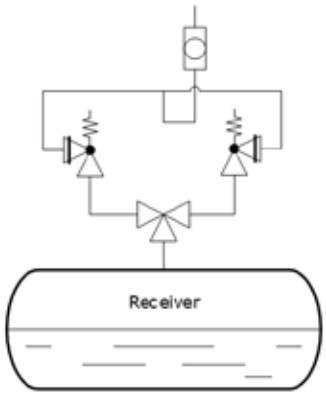	Protection of vessels, compressors, and heat exchangers against excessive pressure
Overflow valve BSV + pilot-operated overflow valve POV	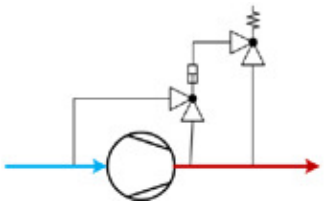	Protection of compressors and pumps against excessive pressure
Pressure and temperature limiting devices– see section 7.2		
Pressure cut out: RT	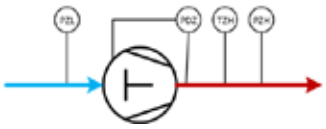	Protection of compressors against excessively high discharge and excessively low suction pressure
Differential pressure cut out: MP 55		Protection of reciprocating compressors against excessively low oil pressure
Thermostat: RT		Protection of compressors against excessively high discharge temperature
Liquid level safety devices – see section 7.3		
Liquid level switch LLS 4000		Protection of the system against excessively high/low refrigerant level in the vessels
Liquid level glass LLG		Visual monitoring of liquid refrigerant level in vessels

8. Refrigerant pump controls

Typically, industrial refrigeration systems have pump circulation of liquid refrigerant. There are some advantages to pump circulation compared with DX type systems:

Pumps provide efficient distribution of liquid refrigerant to evaporators and return of vapour-liquid mixture back to the pump separator.

By supplying more refrigerant than the evaporators can evaporate, called overfeed, it is possible to avoid superheating the refrigerant in the evaporator, and thereby increase efficiency of the evaporators, without risk of liquid hammer in the compressor.

When installing the pump, proper care must be taken to prevent cavitation. Cavitation occurs if a local minimum pressure inside the pump becomes lower than the saturation pressure of the refrigerant. This will cause formation of refrigerant vapour bubbles which will collapse later in the pump. This will cause damage to the pump and should be avoided.

Therefore, the liquid height H above the pump should at least be able to compensate the pressure loss of friction ΔH_f through the pipe and valves, the pipe inlet loss ΔH_d, and the acceleration of the liquid into the pump impellor NPSH (the pump's net positive suction head), as shown in Figure 8.1. The pump's NPSH is specified by the pump manufacturer.

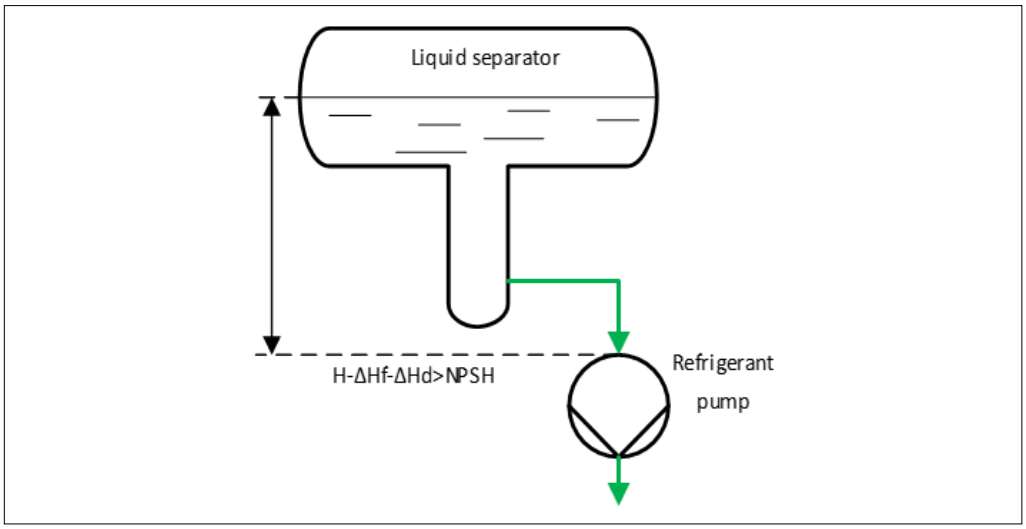

Figure 8.1: Placing of the pump

In order to keep the refrigerant pump in trouble-free operation, the flow through the pump should be maintained within the permissible operating range, as shown in Figure 8.2.

If the flow is too low, the motor heat may evaporate some of the refrigerant and result in dry running or cavitation of the pump.

When the flow is too high, the NPSH (Net Positive Suction Head) characteristic of the pump escalates to an extent that the available positive suction head becomes too low to prevent cavitation.

Therefore, systems should be designed for the refrigerant pump to keep this flow within the operating range.

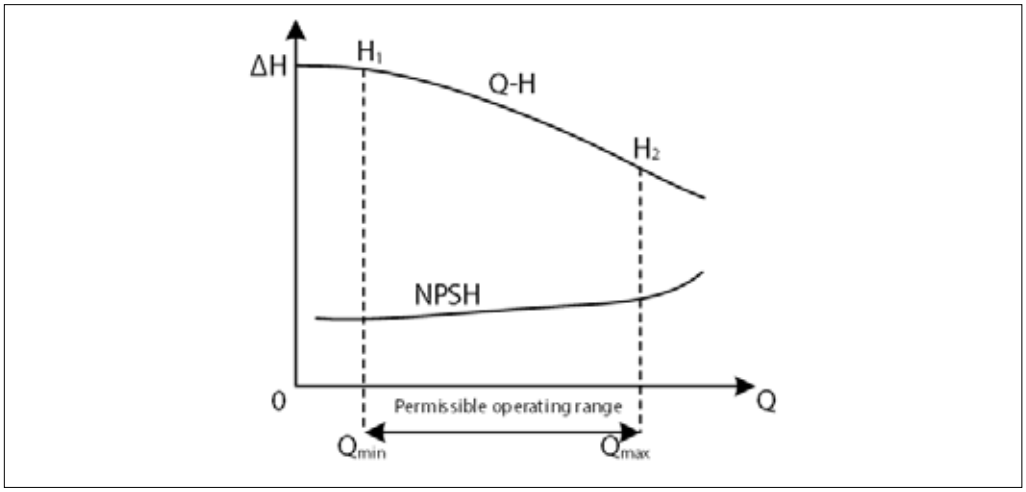

Figure 8.2: A typical Q-H curve for pumps

© Danfoss | Climate Solutions | 2022.10

8.1 Pump protection with differential pressure control

Pumps are easily damaged by cavitation. To avoid cavitation, it is important to maintain sufficient positive suction head for the pump. To achieve enough suction head, an LLS 4000 low-level switch is installed on the liquid separator.

However, even if the low-level switch installed on the liquid separator is kept above the minimum acceptable level, cavitation can still occur.

For example, incorrect operations on the evaporators may cause increased flow through the pump, the low-level switch may fail, and the filter in the pump line may be blocked, etc.

All of these may lead to cavitation. Therefore, it is necessary to shut down the pump for protection when the differential pressure drops below H2 in Figure 8.2 (equivalent to Q_{max}).

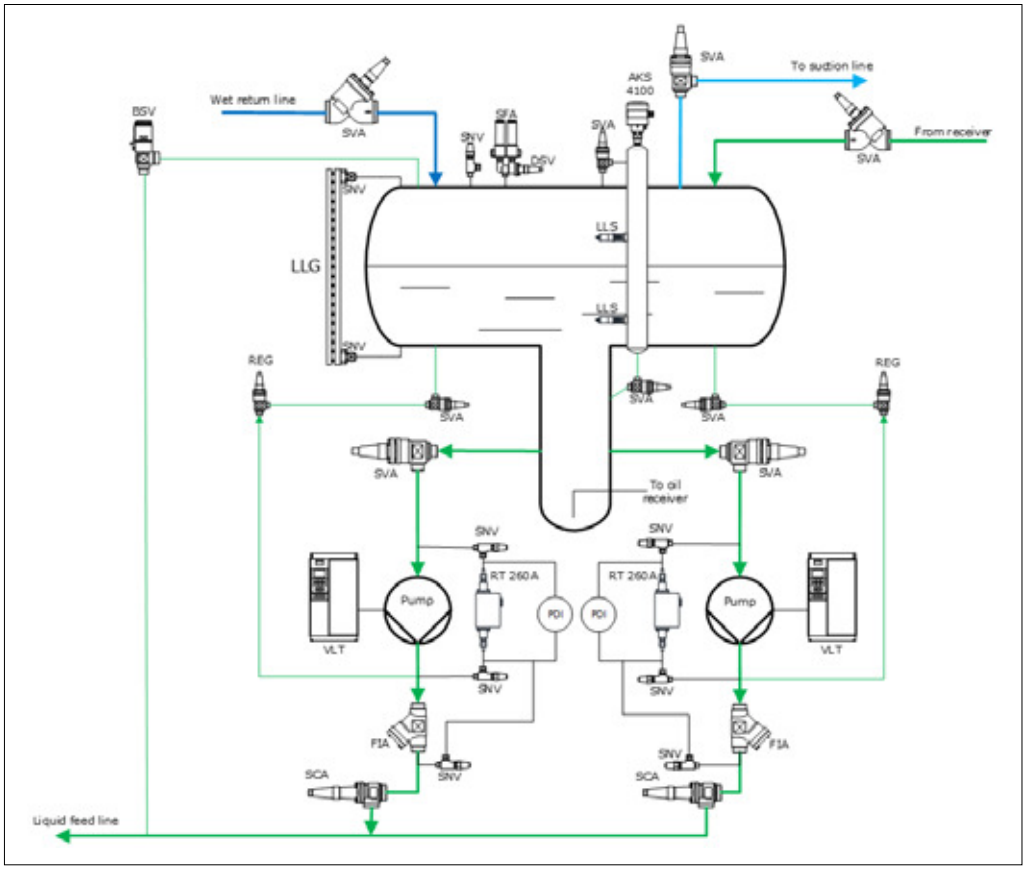

Application Example 8.1.1: Pump protection with differential pressure control RT 260A

Differential pressure controls are used for protection against an excessively low pressure difference. RT 260A are supplied without a timing relay and cause a momentary cut-out when the differential pressure drops below the pressure controls setting.

The filter (**FIA***) is installed on the pump line to remove particles and protect automatic control valves and pumps from damage, blockage, and general wear and tear. The filter can be installed in either the suction line or discharge line of the pump.

If the filter is installed in the suction line before the pump, it will primarily protect the pump against particles. This is particularly important in the initial clean-up during commissioning. However, installing the filter in the pump suction line will add an additional pressure loss, which should be taken into account in order to avoid cavitation in the pump.

Since pressure drop can lead to cavitation, it is recommended to install a 500µ mesh.

Finer meshes could be used during the clean-up, but be sure to take into account the pressure drop when designing the piping. Additionally, it is necessary to replace the mesh after a period of time.

If a filter is installed in the discharge line (as shown), pressure drop is not as crucial and a 150-200µ filter can be used. It is important to note that in this installation, particles can still enter the pump before being removed from the system.

The stop-check valve (SCA) is installed on the discharge lines of the pumps to protect the pumps against reverse flow (pressure) during standstill and to function as a stop valve for service of the pump.

The internal safety relief valve (BSV) should be dimensioned according to the length of the pipe on the liquid feed line between the SCA stop-check valve and the solenoid valve at the evaporator, where liquid can be trapped, so that the pressure in the liquid feed line can be relieved.

8.2 Pump bypass flow control

The most common way to keep the flow through the pump above the minimum permissible value (Q_{min} in Figure 8.2) is to design a bypass flow for the pump.

The bypass line can be designed with regulating valve REG as shown in Application Example 8.1.1, a differential pressure pilot-operated servo valve (ICS+CVPP) as shown in Application Example 8.2.1 below, or even just an orifice.

Even if the liquid supply to all evaporators in the system is stopped, the bypass line can still maintain a minimum flow through the pump.

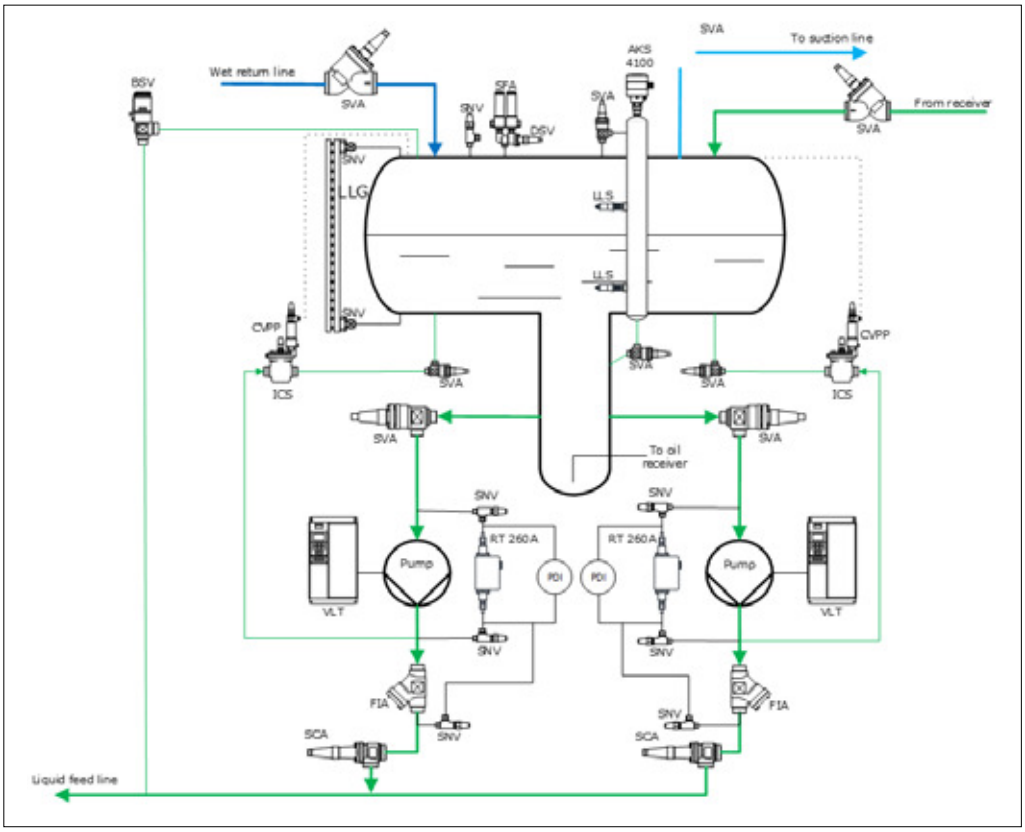

Application Example 8.2.1: Pump bypass flow control with differential pressure pilot-operated servo valve ICS+CVPP

The bypass line is designed for each pump with differential pressure pilot-operated servo valve (ICS+CVPP).

The internal safety valve (BSV) is designed for safety relief when there is excessive pressure. For example, when the stop valves are closed, the liquid refrigerant trapped in the pipes may be heated to excessively high pressure.

The internal safety relief valve (BSV) should be dimensioned according to the length of the pipe on the liquid feed line between the SCA stop-check valve and the solenoid valve at the evaporator, where liquid can be trapped, so that the pressure in the liquid feed line can be relieved.

© Danfoss | Climate Solutions | 2022.10

8.3 Pump pressure control

It is of great importance to some types of pump circulation systems that a constant differential pressure can be maintained across the permanently set throttle valves before the evaporators.

By using the pilot-controlled servo valve (ICS) and pilot valve (CVPP), it is possible to maintain a constant differential pressure across the pump, and therefore a constant differential pressure across the throttle valve.

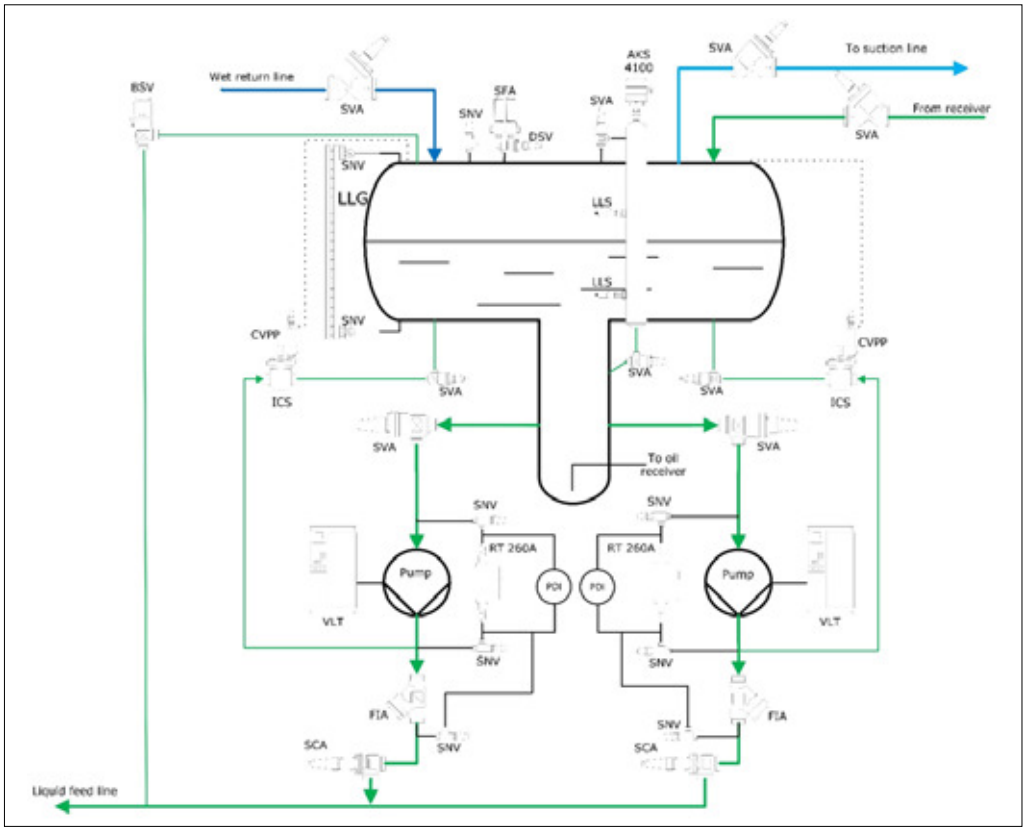

Application Example 8.3.1: Pump differential pressure control with ICS+CVPP

The internal safety relief valve (BSV) should be dimensioned according to the length of the pipe on the liquid feed line between the SCA stop-check valve and the solenoid valve at the evaporator, where liquid can be trapped, so that the pressure in the liquid feed line can be relieved.

8.4 Summary

Solution		Application	Benefit	Limitations
Pump Protection with Differential Pressure Control – see section 8.1				
Pump protection with differential pressure control switch, RT 260A.	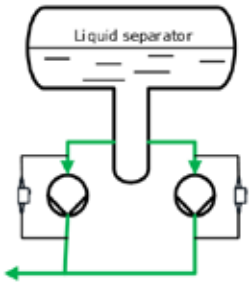	Applicable to all pump circulation systems.	Simple. Effective in protecting the pump against low differential pressure.	Not applicable to flammable refrigerants.
Filter and Check valve				
Filter (FIA) and stop-check valve (SCA) on the pump discharge line.	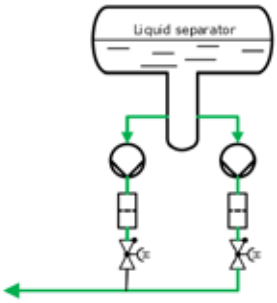	Applicable to all pump circulation systems. Filter can also be installed in pump suction line.	Simple. Effective in protecting the pump against back flow.	Filter on the suction line adds extra pressure drop before pump. Filter on discharge line still allows particles to enter the pump.
Pump Bypass Flow Control – see section 8.2				
Pump bypass flow control with regulating valve (REG) and protection with safety relief valve (BSV).	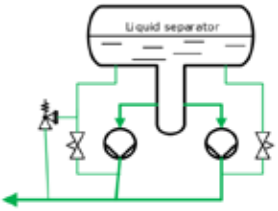	Applicable to all pump circulation systems.	Simple. Effective and reliable in keeping the minimum flow for the pump. Safety valve can effectively prevent excessive pressure.	Part of pump power wasted.
Pump bypass flow control with differential pressure pilot-operated servo valve (ICS+CVPP) and protection with safety relief valve (BSV).	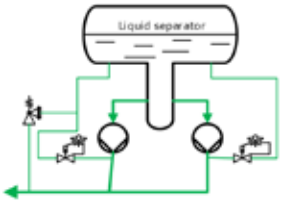	Applicable to all pump circulation systems.	Simple. Effective and reliable in keeping the minimum flow for the pump. Maintains a constant differential pressure between valve inlet and liquid. Safety valve can effectively prevent excessive pressure.	Part of pump power wasted.
Pump Pressure Control – see section 8.3				
Pump pressure control with differential pressure pilot-operated servo valve (ICS+CVPP).	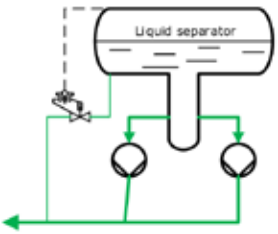	Applicable to pump circulation systems that require constant differential pressure across the regulating valves before evaporators.	Provides a constant differential pressure for the evaporators.	Inefficient use of pump energy compared to using a frequency converter.

© Danfoss | Climate Solutions | 2022.10

9. Others

This chapter covers industrial refrigeration applications for removal of water and air in the system, as well as heat recovery systems. These applications aim to optimize operation of the refrigeration systems, reducing the energy consumption and harvesting excess heat for other purposes, e.g. space heating or hot water production.

9.1 Filter driers in fluorinated systems

Water, acids and particles appear naturally in fluorinated refrigeration systems. Water may enter the system as a result of installation, service, leakage, etc.

Acid is formed as a result of the breakdown of the refrigerant and oil.

Particles usually result from soldering and welding residue, the reaction between refrigerant and oil, etc.

Failure to keep the contents of acids, water and particles within acceptable limits will significantly shorten the lifetime of the refrigeration system and even burn out the compressor.

Too much moisture in systems with evaporating temperatures below 0 °C (32 °F) could form ice, which may block control valves, solenoid valves, filters, and so on. Particles increase the wear and tear on the compressor and valves, as well as the possibility of creating a blockage. Acids are not corrosive if there is no water. But in a water solution, acids can corrode the pipe work and plate the hot bearing surfaces in the compressor.

This plating builds up on the hot bearing surfaces, including the oil pump, crankshaft, con rods, piston rings, suction and discharge valve reeds etc. This plating causes the bearings to run hotter as the lubrication gap in the bearings reduces as the plating gets thicker.

Cooling of the bearings is reduced due to less oil circulating through the bearing gap. This causes these components to get hotter and hotter. Valve plates start to leak by causing a higher discharge superheating effect. As the problems escalate, compressor failure becomes imminent.

Filter driers are designed to prevent all of the above circumstances. Filter driers serve two functions: a drying function and a filtering function.

The drying function constitutes the chemical protection and includes the adsorption of water and acids. The purpose is to prevent corrosion of the metal surface, decomposition of the oil and refrigerant and avoid burn-out of motors.

The filter function constitutes the physical protection and includes retention of particles and impurities of any kind. This minimizes the wear and tear of the compressor, protects it against damage and significantly prolongs its life.

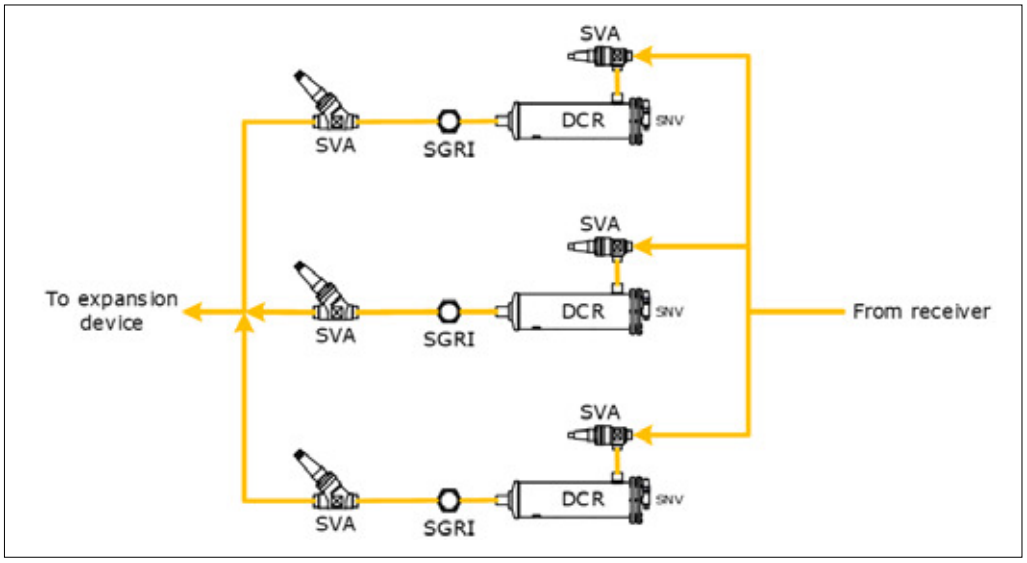

Application Example 9.1.1: Filter drier in HFC systems

For fluorinated systems, filter driers are normally installed in the liquid line before the expansion valve. In this line, there is only pure liquid flow through the filter drier (unlike the two-phase flow after the expansion valve).

The pressure drop across the filter drier is small, and the pressure drop in this line has little influence on the performance of the system. Installation of filter driers could also prevent ice formation in the expansion valve.

In industrial installations the capacity of one filter drier is not normally sufficient to dry the whole system, therefore several filter driers could be installed in parallel.

DCR is a filter drier with interchangeable solid cores. There are three types of solid cores: DM, DC and DA.

DM - 100% molecular sieve solid core suitable for HFC refrigerants and CO_2;

DC - 80% molecular sieve and 20% activated alumina solid core suitable for CFC & HCFC refrigerants and compatible with HFC refrigerants;

DA - 30% molecular sieve and 70% activated alumina solid core suitable for clean-up after compressor burn-out and compatible with CFC / HCFC / HFC refrigerants.

In addition to the above normal solid cores, Danfoss also provide other customer-tailored solid cores. Danfoss also provide filter driers with fixed solid cores. For more information, please refer to the product catalogue or contact your local sales companies.

The sight glass with indicator for HCFC/CFC, type SGRI, is installed after the filter drier to indicate the water content after drying. Sight glasses with indicator for other types of refrigerants can also be provided. For more information, please refer to the Danfoss product catalogue.

9.2 Water removal for CO_2 systems

CO_2 is a non-polar molecule, so the removal process is different. Like water molecules, CO_2 molecules are small enough to pass through the molecular sieve. However, the water molecules adsorbed on the molecular sieve tend to displace the CO_2 molecules, due to the difference in polarity. Zeolite filter driers cannot be used in ammonia systems because both water and ammonia are very polar. Even though the driers function differently in this respect in CO_2 systems, the efficiency is fairly good. The water retention capacity is approximately the same as in R134a systems.

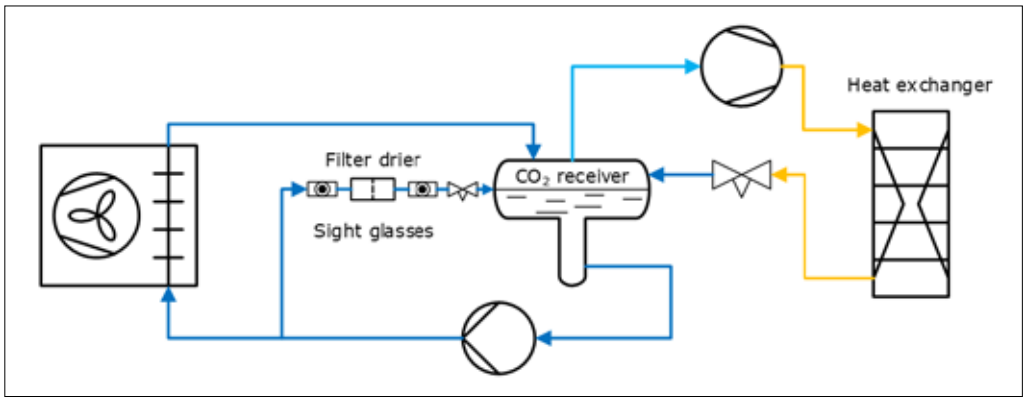

Figure 9.2.1: Principle diagram – Filter drier installed in bypass line in a pumped circulation system

To install a filter drier in a CO_2 system, the following criteria should be considered:

- Relative Humidity
- The relative humidity should be high.
- Pressure Drop

The pressure drop across the filter drier should be small. And the system performance should not be sensitive to this pressure drop.

9.2.1 Two-Phase Flow

Two-phase flow through the filter drier should be avoided, as it brings risk of freezing and blocking because of the unique water solubility characteristics.

It is recommended that a sight glass with indicator be installed both before and after the filter drier. The sight glass indicator before the filter indicates whether there is any water present in the system, and the sight glass indicator after the filter indicates whether the filter is still working.

In case of very low evaporating temperatures, the sight glass might be blocked by ice building up on it. In this case, it is recommended that a plexiglass extender be installed.

© Danfoss | Climate Solutions | 2022.10

9.2.2 Installation of filter driers in pumped circulation systems

In a CO_2 pumped liquid circulation system, installation of filter driers is recommended on the bypass lines from the liquid lines, or directly in the liquid line before evaporators. On these lines, RH is high, there is no two-phase flow, and it is not sensitive to pressure drop.

Installation in other positions is not recommended for the following reasons:

In the compressor-condenser-expansion valve loop, the RH is low. In the liquid separator, more than 90% water exists in the liquid phase because of the much lower solubility of vapour CO_2 compared with liquid. Therefore, little water is brought into the compressor loop by the suction vapour. If filter driers are installed in this loop, the drier will have too little capacity.

In the wet suction line, there is a risk of 'freezing' because of the two-phase flow, as mentioned.

In the liquid line before the refrigerant pumps, pressure drop increases the risk of cavitation to the pumps.

If the capacity of one filter drier is not enough, several filter driers in parallel should be considered.

9.2.3 Installation filter driers in DX systems

In a CO_2 DX system, the water concentration is the same throughout the system, so the RH is only up to the water solubility of the refrigerant.

Although the RH in the liquid line before the expansion valve is relatively small because of the high water solubility of the high-temperature liquid CO_2, it is still recommended that filter driers be installed on this line (same position as in fluorinated system) for the following reasons:

In the suction line and discharge line, it is sensitive to the pressure drop, as well as the high risk of freezing in the suction line. Installation of filter driers is not recommended here, although the RHs are high.

In the liquid line after the expansion valve, installation of filter driers should also be avoided because of the two-phase flow.

9.3 Water removal for ammonia systems

The issue of water in ammonia systems is unique compared with fluorinated systems and CO_2 systems:

The molecular structures of ammonia and water are similar, both are small and polar and, as a result, both ammonia and water are completely soluble.

Because of the similarity of ammonia and water molecules, there has been no efficient filter drier for ammonia. Furthermore, because of the high solubility of water in ammonia, free water is difficult to extract from the solution.

Water and ammonia will co-exist and act as a kind of zeotropic refrigerant, whose saturated P-T relationship is no longer the same as anhydrous ammonia.

These are factors in why ammonia systems are seldom designed as DX systems: on the one hand, the liquid ammonia is hard to completely vaporize when water is present, which will lead to liquid hammer; on the other hand, how can a thermostatic expansion valve function correctly when the saturated P-T relationship changes?

Pumped liquid circulation systems could well avoid the potential damages of water to the compressors. With only vapour entering the suction line, liquid hammer is avoided; and so long as there is not too much water in the liquid, the vapour will contain almost no water (< the recommended max. of 0.3%), which could effectively avoid the oil pollution by water.

While pumped liquid circulation systems effectively avoid damage to the compressors, they still retain the other penalties of water unnoticed:

COP of the system is reduced

When there is water content, the saturated P-T relationship of the refrigerant will be different from pure ammonia. Specifically, the refrigerant will evaporate at a higher temperature for a given pressure. This will decrease the refrigeration capacity of the system and increase power consumption.

Corrosion

Ammonia becomes corrosive with water present and starts to corrode the pipe work, valves, vessels, etc.

Compressor problems

If water is taken into the compressors, e.g. due to inefficient liquid separators, this will also lead to oil and corrosion problems for the compressors.

Therefore, to keep the system in efficient and trouble-free operation, it is recommended that water be detected regularly, and that some water removal method be employed when the water content is found to be above the acceptable level.

Basically, there are three ways of dealing with water contamination:

Change the charge

This is suitable for systems with small charges (e.g. chillers with plate type evaporators), and it should comply with local legislation.

Purging from some evaporators

This is suitable for some gravity-driven systems without hot gas defrost. In these systems, water remains in the liquid when ammonia vaporizes, and accumulates in the evaporators.

Water rectifier

Part of contaminated ammonia is drained into the rectifier, where it is heated, with the ammonia vaporising and the water drained. This is the only way of removing water for pumped liquid circulation systems.

For more information on water contamination and water removal in ammonia refrigeration systems, please refer to IIAR bulletin 108.

It is necessary to mention that there is a downside to the water content being too low – namely the possibility of a specific kind of steel corrosion. However, it is not likely in a real-life system.

Water will always end up in vessels, where only gas/evaporated refrigerant will leave it, e.g. low-pressure separators or closed economizers.

There are many different water rectifiers and the one shown in Application Example 9.3.1 is just one of many different solutions.

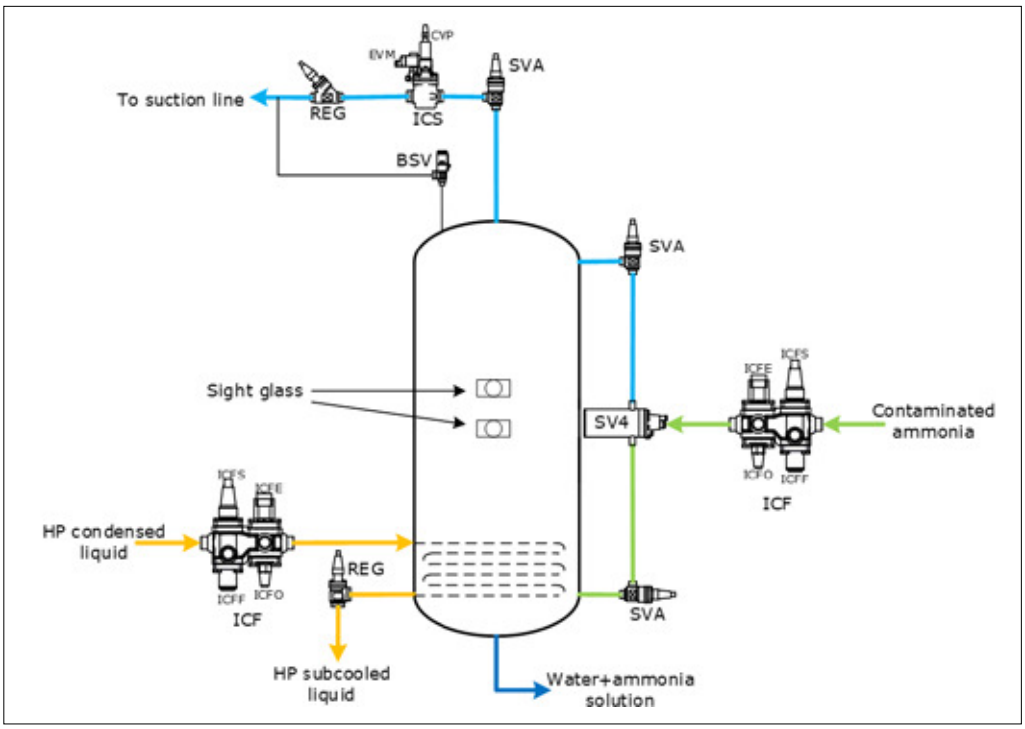

Application Example 9.3.1: Water rectifier heated by HP condensed liquid and controlled by float valves

Procedure for removing water:

Energise the solenoid valves ICFE (for the contaminated ammonia) and ICS+EVM. Contaminated ammonia is drained into the rectifying vessel. The float valve SV4 will close when the liquid level in the vessel reaches the set level. Energise the solenoid valve ICFE (for the HP condensed liquid).

Condensed liquid is fed to the coil inside the vessel and starts to heat the contaminated ammonia. Ammonia starts to evaporate, and contaminated liquid remains in the vessel. When ammonia evaporates in the vessel and the liquid level drops, the float valve SV4 will open and drain more contaminated ammonia into the vessel. After a certain time, based on experience, preparation for draining the contaminated liquid can start.

De-energise the solenoid valve ICFE (for the contaminated ammonia feed line). After a certain time, all ammonia will be evaporated, and only contaminated liquid will be left in the vessel. To drain the contaminated liquid from the vessel, the pressure inside the vessel must be increased to a pressure above 0 °C (32 °F). This is done by de-energising the solenoid valve ICS+EVM. Now the pressure inside the vessel is controlled by the ICS+CVP. The water+ammonia solution should be drained carefully with a draining system.

For safety considerations, safety relief valve BSV is installed on the vessel to avoid excessive pressure build-up.

© Danfoss | Climate Solutions | 2022.10

9.4 Air purging systems

Refrigeration systems can become contaminated, leading to a significant reduction in efficiency or possibly a lack of capacity. Water, oil and air are the most common contaminants which should be handled for proper functioning of the system. This chapter deals with 'air' contamination and solutions for removing it.

Referring to the contamination as 'Air' is a generalisation that covers a number of gases that all have in common the fact that at the temperatures and pressures that exist in a condenser, they cannot condense into their liquid form. Another common term is 'Non-condensables' (NC), which more accurately describes the behaviour and problem. Since the NC gasses cannot condense, they (usually) stay in the high-pressure side where they, in sufficient amounts, can block the condenser surface. Most gasses are heavier than ammonia gas at condensing pressure/temperature and because of that, they will concentrate on top of liquid surfaces. These locations are the appropriate places to attempt to collect the Non-condensables.

The below diagram shows the principle of what can happen in a condenser. The four different sections represent four possible scenario's in a condenser (temperatures are examples):

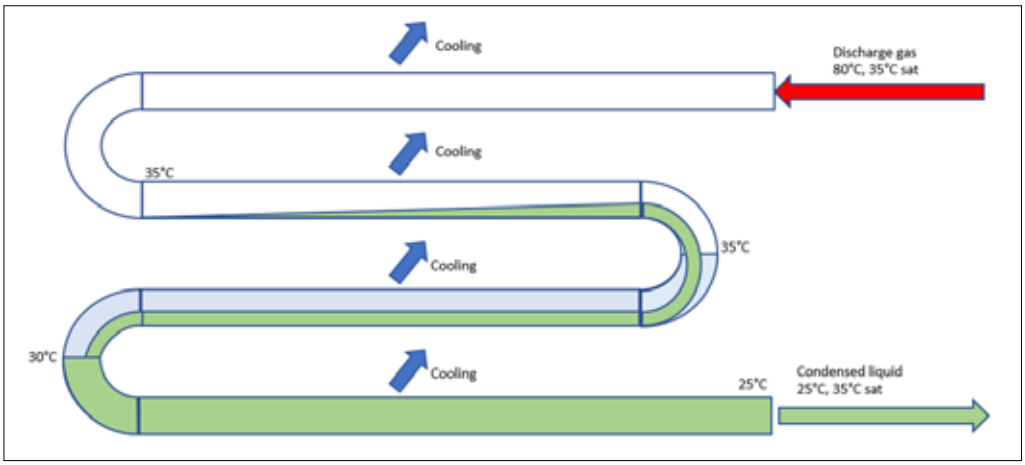

Figure 9.2: Principle diagram of air build-up in condenser

De-superheating. The discharge gas from the compressor is cooled to saturation by the cooling outside the coil.

Condensing. The refrigerant is condensed by the cooling.

Air-filled section. On top of the liquid surface, the non-condensables will accumulate and remain fairly stationary. The liquid condensed in the previous section passes through this air-filled section, where the cooling that still exists on the outside of the coil will sub-cool the refrigerant liquid.

Liquid-filled section. This section is filled with refrigerant liquid that is built up in the condenser, usually as a result of incorrect piping out of the condenser. In a correctly piped condenser, this section should not be present, but note that the liquid surface will be somewhere outside of the condenser, so the air will eventually accumulate enough to block some condenser surface. The cooling on the outside of the coil will again result in a subcooling of the refrigerant liquid.

Most people would think that subcooling is good, because it decreases the flashing to lower pressures and helps to prevent flash gas before expansion valves etc. It is true that these benefits are present, but subcooling created in the condenser uses surface that could have been used to keep the condensing pressure down. So excessive subcooling from a condenser is not a good thing. With an increased condensing pressure, the compressor needs to work harder to compress the refrigerant gas and the system efficiency drops. As a rule of thumb, the compressor work increases 3-4% per degree Celsius (1.7 to 2.2% per deg F) of increase in condensing temperature.

In a condenser with proper function, the refrigerants liquid is slightly subcooled, normally 1 to 1.5K (1.8 to 2.7 °F). So, if a subcooling (significantly) larger than that is observed, then one or both of the problems from point 3 and 4 is present. Incorrect piping can be observed from the outside (refer to the Condenser installation chapter), and if it is found to be correct, then a large subcooling signifies non-condensables in the condenser.

As the non-condensables accumulate above liquid surfaces, the appropriate place to collect these depends on the condenser control. Please refer to the condenser control chapter for details on the condenser installation.

9.4.1 High-pressure float control

High-pressure float control installations use a float valve or a level sensor/valve combination to drain the liquid created in the condenser to the low-pressure side as soon as it leaves the condenser.

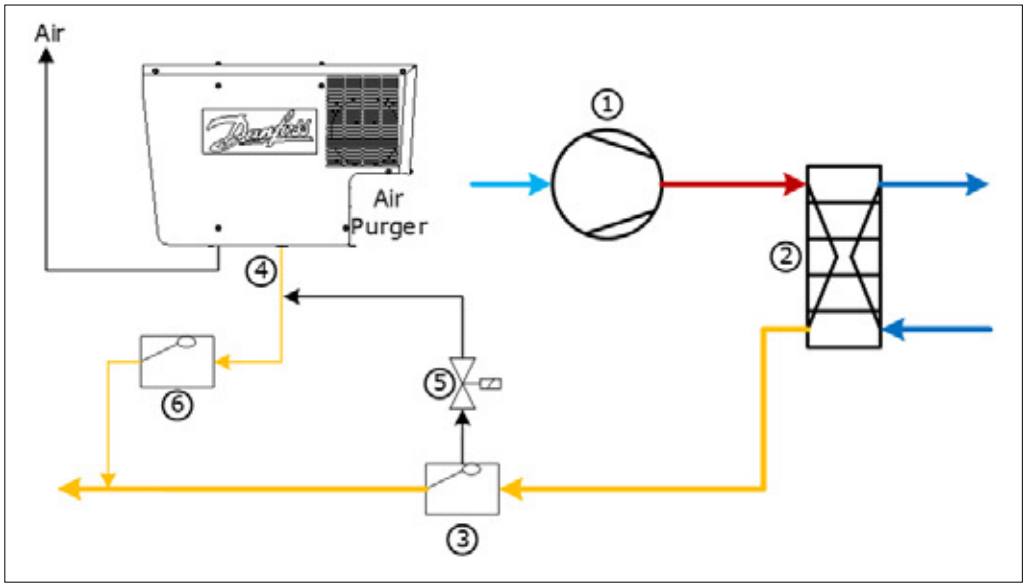

Figure 9.3: Principle diagram of high-pressure float valve control for air-purging unit

The condenser (2) condenses the discharge gas from the compressor (1) and the float valve (3) passes it back to the low-pressure side. Since the liquid surface is in the float valve itself, this is the appropriate place to collect non-condensables. An air purger (4) is connected to the float valve through a solenoid valve (5) and any ammonia liquid created in the purger is passed to the low-pressure side through a (small) float valve (6).

Note that most float valves have a small bypass because experience has shown that without it the float valve can stop functioning. This is due to non-condensables accumulating in the float valve preventing the liquid surface from rising to open the valve. Consequently, the bypass allows the non-condensables to pass to the low-pressure side where it will be re-compressed by the compressor, leading to loss of capacity and unnecessary power usage.

9.4.2 Low-pressure float valve

Low-pressure float valve installations use a float valve or a level sensor/valve combination to control the level on the low-pressure side. As such, any variation in volume related to pressure, temperature or capacity changes needs to be accommodated on the high-pressure side. A receiver is used for this. Please refer to the Condenser control chapter for correct installation of condensers in low-pressure float valve systems.

© Danfoss | Climate Solutions | 2022.10

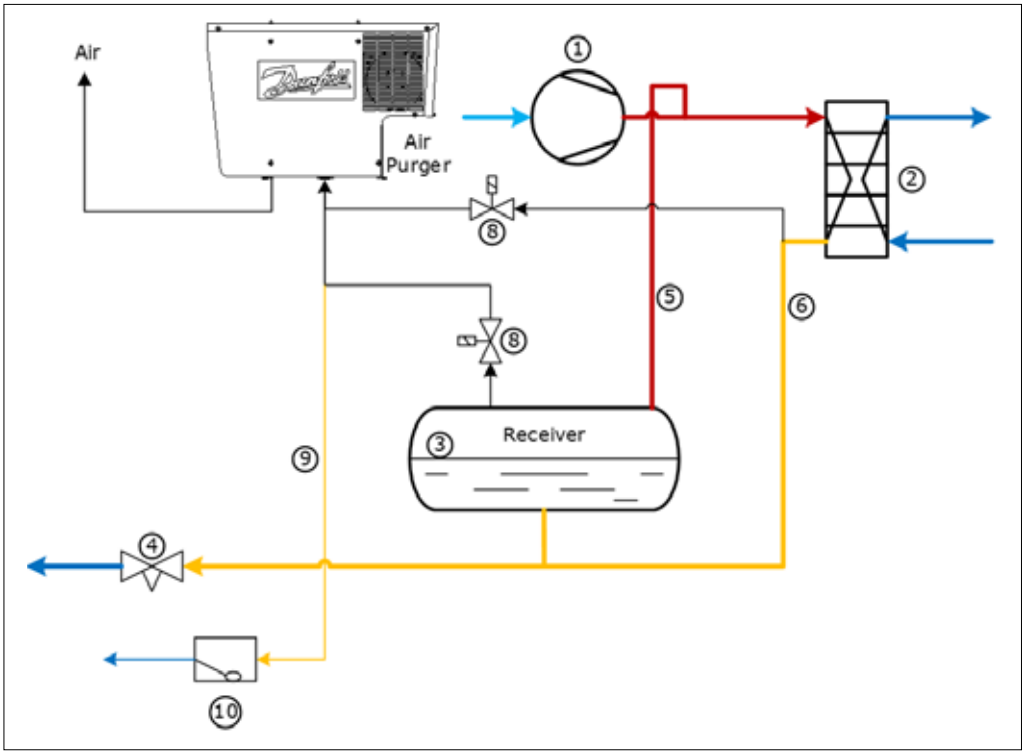

Figure 9.4: Principle sketch for low-pressure float valve control for air-purging unit

The discharge gas from the compressor (1) is condensed in the condenser (2) and led to the receiver (3) for temporary storage before being led to the low-pressure side through an expansion valve (4). To allow for free movement of the liquid surface in the receiver, it is pressure equalized through the equalization line (5). However, this short circuits the condenser and to ensure proper functioning of the condenser, drop legs (6) needs to be installed with enough height to allow for a liquid build-up to compensate for the pressure loss in the condenser. As sketched in the above drawing, the liquid level in the drop pipe is higher than the receiver level.

In a low-pressure float valve system such as the one above, non-condensables can accumulate in two different locations: on top of the liquid in the drop pipe and on top of the liquid in the receiver. Consequently, the appropriate locations to purge the non-condensables are these two locations. Because of that, the air purger (7) is connected to these two locations through two solenoid valves (8). Liquid created in the air purger can be sent to the low-pressure side through a dedicated float valve (10).

Note that it is important that only one solenoid valve on the purge points is opened at a time to avoid short-circuiting the system. In the above example, the pressure in the receiver is equalized to the discharge line, but the pressure in the condenser outlet is lower because of the pressure loss in the condenser (which necessitates the drop leg in the condenser outlet). If both solenoids (8) are open at the same time, the drop leg function is compromised, which would result in undesirable functioning of the condenser system.

Furthermore, it is important to ensure that liquid cannot accumulate in the air purger. The air purger itself creates ammonia liquid through condensing, but unfortunate placement of the air purger and possibly an unfortunate placement of the purge points can also lead ammonia liquid to the air purger. The latter two should be avoided through proper installation and the drain valve (10) should be sufficient to remove all liquid created. If the air purger is filled with ammonia liquid then it could lead the control to purge ammonia liquid rather than ammonia-free air.

9.4.3 The Danfoss air purger

The Danfoss Intelligent Purging System is a stand-alone, self-contained purging unit designed to automatically remove non-condensable gases from up to 8 system points in an industrial ammonia refrigeration system, thereby decreasing the power consumption of the entire system while greatly improving the system's lifetime expectations. The Danfoss Intelligent Purging System is an electronically controlled, self-contained R452A refrigerant system that runs independently of the main ammonia plant with only one flange connection to the ammonia plant. This allows ease of installation with limited plant interruption. Furthermore, all parameters are conveniently pre-programmed with the exception of the amount of purge points, bringing commissioning time down to mere minutes. The unit runs automatically in 24-hour cycles, checking for

the presence of NC gases and, if present, removes the NC gases to regain and retain the design capacity of the ammonia system while preventing future air accumulation. Modbus RTU connectivity ensures that the Danfoss Intelligent Purging System may be connected to the plants control system where all relevant data and alarms may be tracked.

9.4.4 Locating of purge points

Before non-condensables can be removed, it must be considered where they will collect. With multiple condensers and receivers, it is difficult to determine the exact location of the NC gases. Condenser piping design, component arrangement, operation and seasonal weather changes will affect the location. It is important to frequently purge each location, one at a time, to ensure that all the NC gases are removed.

In Figures 9.5 and 9.6 below there is shown how to install a Danfoss IPS respectively on a single and on multiple purging points.

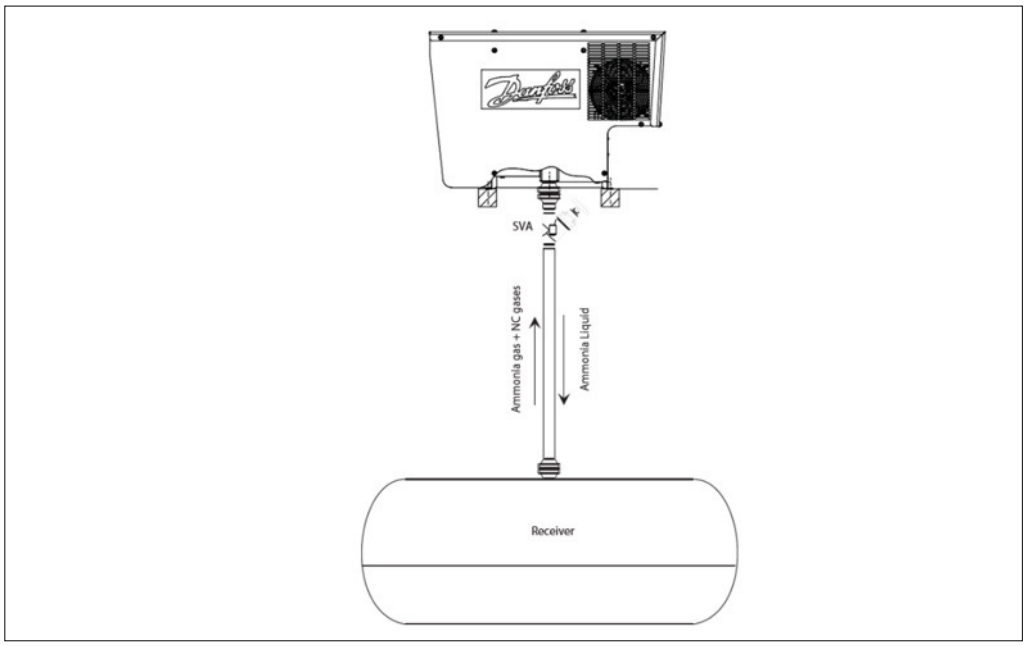

Figure 9.5: The Danfoss IPS installed on a single purge point

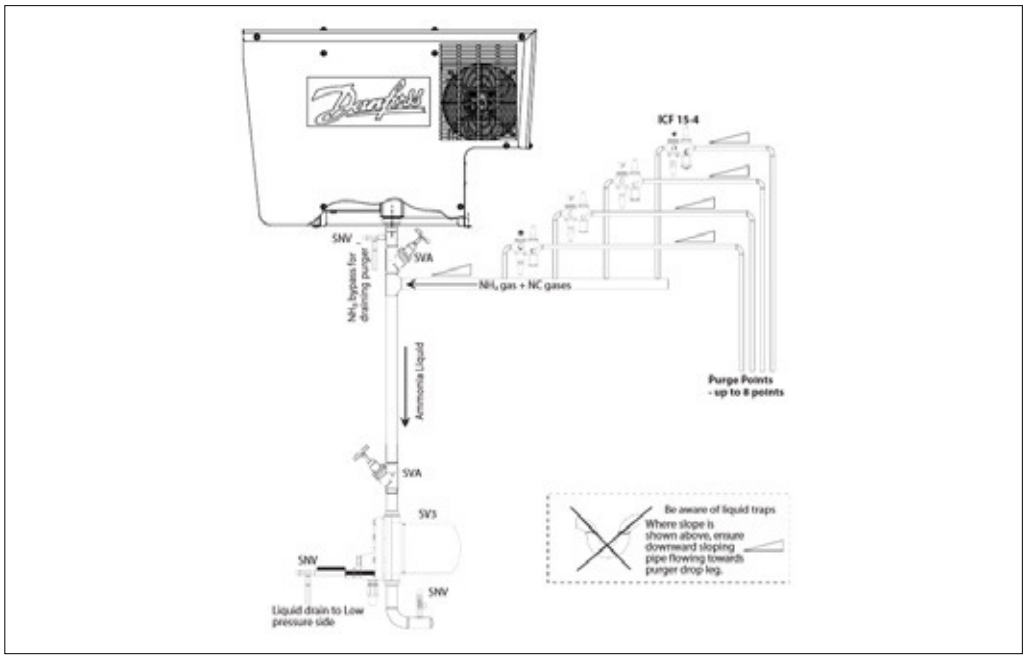

Figure 9.6: The Danfoss IPS installed on multiple purge points

© Danfoss | Climate Solutions | 2022.10

As a rule of thumb, refrigerant gas enters a condenser at a relatively high velocity and by the time it reaches the outlet of the condenser, its velocity is significantly lower. Therefore the non-condensables accumulate at the condenser's outlet and where one of the purge points need to be located. If the condenser consists of several circuits, then a purge point needs to be located at each outlet. On the liquid receiver the purge point should be located at the point furthest away from the liquid inlet.

Based on many years of experience with purger installations, the figures below show several different configurations and the recommended location of purge points for each.

In the following figures, the long arrows show high gas velocity. By decreasing the gas velocity, arrow length also reduces. Non-condensables accumulation is shown by black dots. Note: Always locate the purge point at the top of the pipe and it must be ensured that it is above the liquid surface under all operation conditions.

• *Receivers*

As the liquid enters a receiver, mist is generated around the inlet. This mist will keep the NC-gases away from the area around the receiver's inlet. Hence any purging from here should be avoided. The purge point on a receiver, therefore, should be at the point furthest away from the liquid inlet (Figure 9.7).

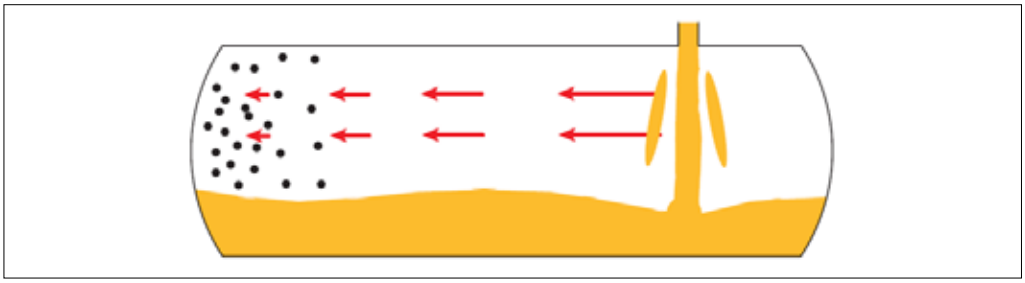

Figure 9.7: NC gases in a receiver

• *Evaporative condensers*

With an evaporative condenser, the velocity of the entering refrigerant gas prevents any significant non-condensables accumulation upstream from the inlet of the condenser. Therefore NC-gases will be accumulated at the outlet of the evaporative condenser, which is the optimal NC-gases purge point.

If reduction of the pipe size of the outlet of the condenser is needed, then it should be placed in the vertical pipe. If the pipe reduction is placed in the horizontal pipe, this can cause a backup of liquid refrigerant into the condenser to a level that will not allow the air to reach the purge point. This liquid backup has a negative impact not only on the NC-gas purging, but also decreases condenser's capacity and increases condensing pressure.

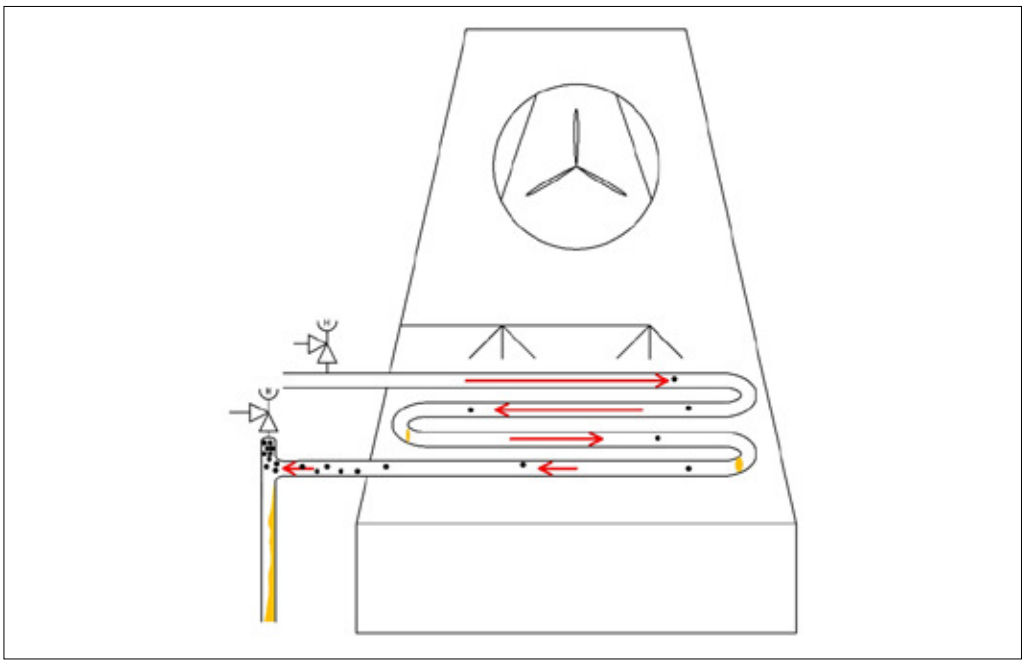

Figure 9.8: NC gases in evaporative condenser

• *Shell and tube condensers*

When the inlet of the condenser is asymmetric then the non-condensables should be purged from the point furthest away from the inlet (Figure 9.9).

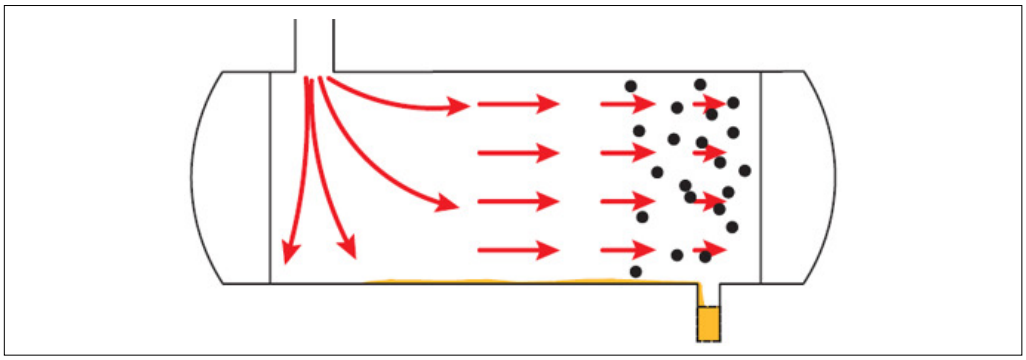

Figure 9.9: NC gases in horizontal shell and tube condensers with one asymmetric inlet

When the inlet of the condenser is in the center then the NC-gases should be purged from each end of the condenser (Figure 9.9).

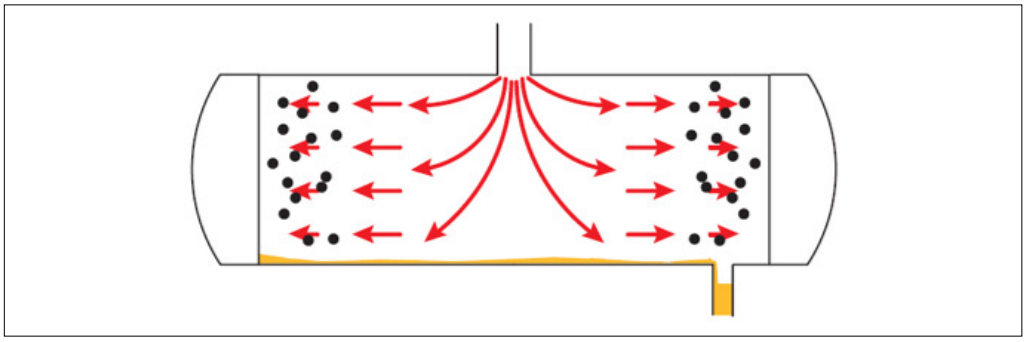

Figure 9.10: NC gases in horizontal shell and tube condensers with center inlet

With a vertical shell and tube condenser installation with a center inlet, low gas velocity will exist at both the top and bottom of the condenser. Purge points are recommended at both the top and the bottom (Figure 9.11). Please note that the bottom purge point should be above the liquid level at all operation conditions.

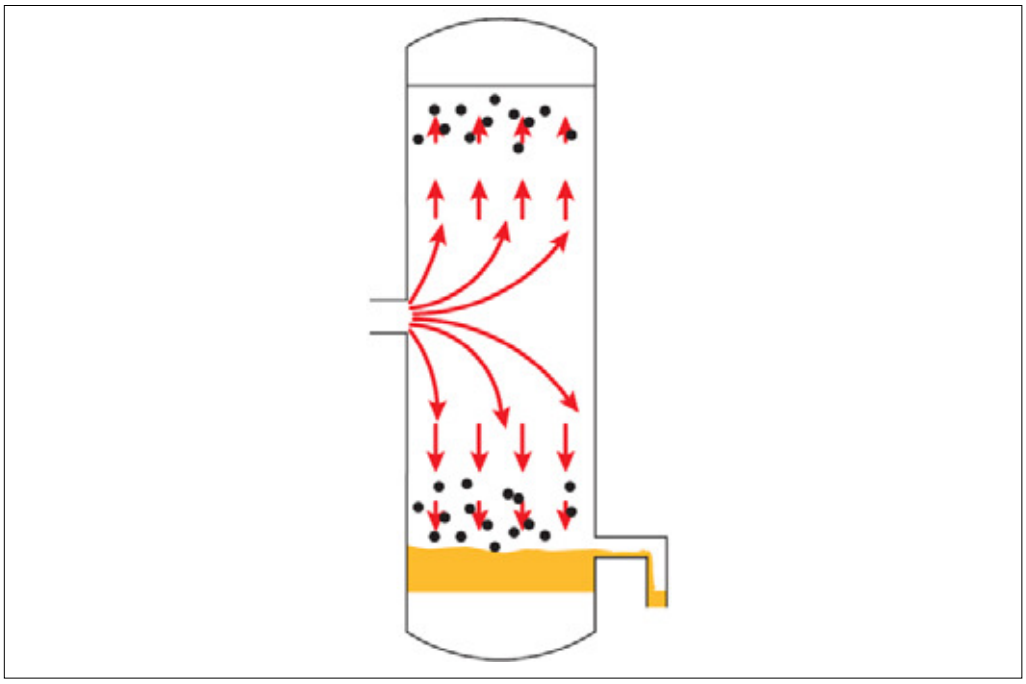

Figure 9.11: NC gases in vertical shell and tube condensers

© Danfoss | Climate Solutions | 2022.10

• *Plate condensers*

The best non-condensables purge point from a plate condenser is from the upper part of the outlet, which is always placed in the bottom connection of the plate heat exchanger (Figure 9.12).

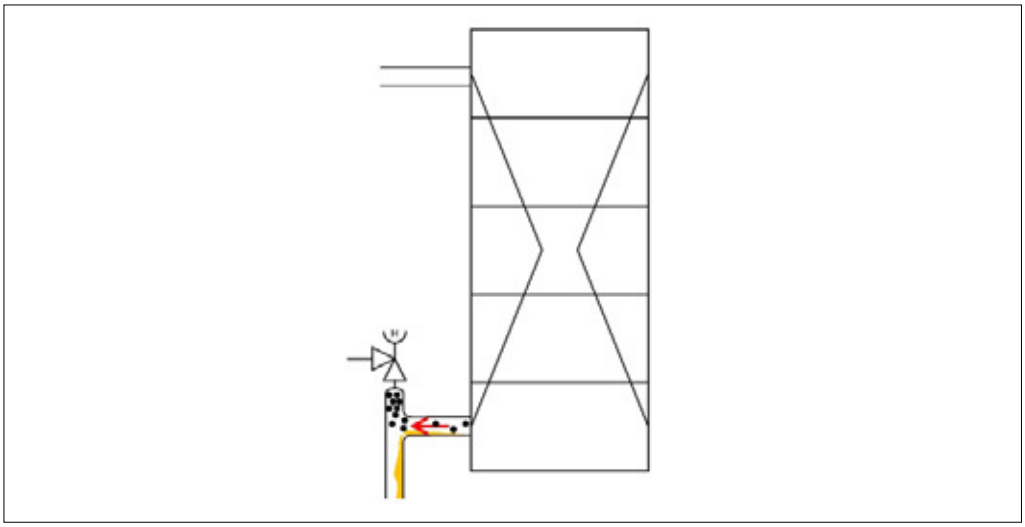

Figure 9.12: NC gases plate heat exchanger condensers

9.5 Heat recovery systems

The free heat from de-superheating and/or condensing in the condenser can be reclaimed if there are requirements for heating in the plant. These include heating of air in offices or shops, heating water for washing or processing, preheating boiler feed water, etc.

To make heat recovery an economic solution, it is important to ensure that the free heat and the heating requirements match in terms of timing, temperature level and heat flow. For example, for production of hot water, i.e. when heat at a high temperature level is required, the de-superheating heat could be recovered; whilst for office heating, recovery of all the condenser heat could be considered.

A well-designed control system is crucial for trouble-free and efficient operation of refrigeration systems with heat recovery.

The purpose of control is to coordinate heat recovery and refrigeration:

The basic function of refrigeration should be ensured whether heat recovery is running or not. The condensing pressure should not be too high when heat recovery stops. Furthermore, for DX systems, the condensing pressure should not be too low either (See section 3).

The requirements for heat recovery, e.g. the temperature and the heat flow, should be fulfilled.

Trouble-free on/off control of the heat recovery loop according to demand.

Heat recovery control requires very sophisticated design, which may vary from plant to plant.

10. Using CO_2 in refrigeration systems

The use of carbon dioxide (CO_2) in refrigeration systems is not new. Carbon dioxide was first proposed as a refrigerant by Alexander Twining (ref. [1]), who mentioned it in his British patent in 1850. Thaddeus S.C. Lowe experimented with CO_2 for military balloons, but he also designed an ice machine with CO_2 in 1867. Lowe also developed a machine onboard a ship for transportation of frozen meat.

From the literature it can be seen that CO_2 refrigerant systems were developed during the following years and they were at their peak in the 1920s and early 1930s. CO_2 was generally the preferred choice for use in the shipping industry because it was neither toxic nor flammable, whilst ammonia (NH_3 or R717) was more common in industrial applications (ref. [2]). CO_2 disappeared from the market, mainly because the new 'miracle refrigerant' Freon had become available and was marketed very successfully.

Ammonia has continued to be the dominant refrigerant for industrial refrigeration applications over the years. In the 1990s there was renewed interest in the advantages of using CO_2, due to ODP (Ozone Depletion Potential) and GWP (Global Warming Potential), which has restricted the use of CFCs and HFCs and imposed limits on refrigerant charges in large ammonia systems.

CO_2 is classified as a natural refrigerant, along with ammonia, hydrocarbons such as propane and butane, and water. All of these refrigerants have their respective disadvantages.

Ammonia is toxic, hydrocarbons are flammable, and water has limited application potential. By contrast, CO_2 is non-flammable and at normal conditions also non-toxic. However, CO_2 is heavier than air and will collect in basements. Exposure to large CO_2 concentrations can be fatal.

CO_2 differs from other common refrigerants in many aspects and has some unique properties. Technical developments since 1920 have removed many of the barriers to using CO_2, but users must still be highly aware of its unique properties and take the necessary precautions to avoid problems in their refrigeration systems.

Highlights of CO_2's properties relative to the other refrigerants include:

- Higher operating pressure for a given temperature.
- Narrower range of operating temperatures.
- Triple point at a much higher pressure.
- Critical point at a very low temperature.

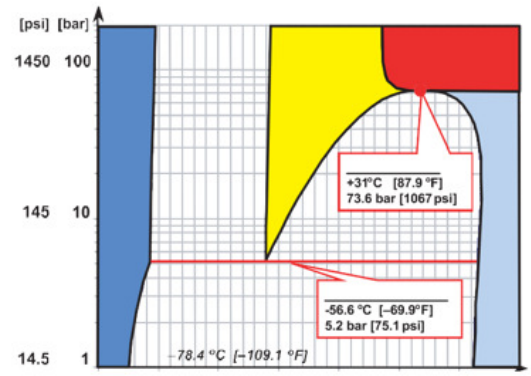

While the triple point and critical point are normally not important for common refrigerants, CO_2 is different. The triple point is relatively high at 5.2 bar (75.1 psi), but more importantly, higher than normal atmospheric pressure.

This can create problems unless suitable precautions are taken. Also, CO_2's critical point is very low: 31.1 °C (88.0 °F), which strongly affects design requirements.

© Danfoss | Climate Solutions | 2022.10

In the table below, various properties of CO_2 are compared with those of R134a and ammonia.

Refrigerant			R134a		Ammonia		CO_2	
Natural substance?			NO (HFC)		YES		YES	
Ozone Depletion Potential (ODP)			0		0		0	
Global Warming Potential (GWP)			1300		-		1	
Critical point	bar	(psi)	40.7	(590)	113	(1640)	73.6	(1067)
	°C	(°F)	101.2	(214)	132.4	(270)	31.1	(87.9)
Triple point	bar	(psi)	0.004	(0.06)	0.06	(0.87)	5.18	(75.1)
	°C	(°F)	-103	(-153)	-77.7	(-108)	-56.6	(-69.9)
Flammable or explosive			NO		(YES)		NO	
Toxic			NO		YES		(YES)	

Table 10.1: Comparison of refrigerant properties

10.1 CO_2 as a refrigerant

CO_2 may be employed as a refrigerant in a number of different system types, including both subcritical and supercritical. For any type of CO_2 system, both the critical point and the triple point must be considered.

The most common refrigeration cycle is subcritical, i.e. the entire range of temperatures and pressures are below the critical point and above the triple point. A single-stage subcritical CO_2 system is simple, but it also has disadvantages because of its limited temperature range and high pressure (1). Subcritical CO_2 systems are therefore only suitable in very cold areas or as a low temperature cycle in a cascade system.

Operating pressures for subcritical cycles are usually in the range 5.7 to 35 bar (83 to 507 psi), corresponding to –55 to 0 °C (–67 to 32 °F). If the evaporators are defrosted using hot gas, then the operating pressure is approximately 10 bar (145 psi) higher.

Transcritical CO_2 systems were once only of interest for small and commercial applications, e.g. mobile air conditioning, supermarket refrigeration and small heat pumps. However, with the phase-out of Freon refrigerants and concerns about the toxicity of ammonia, transcritical CO_2 has gained a significant market share of new industrial applications. Transcritical CO_2 systems release heat at temperatures above the critical point for CO_2, thus making them suitable for applications worldwide. Transcritical CO_2 systems and their applications are described in chapter 11.

The log(p)-h diagram for CO_2 sketches a simple subcritical cycle and a simple transcritical cycle.

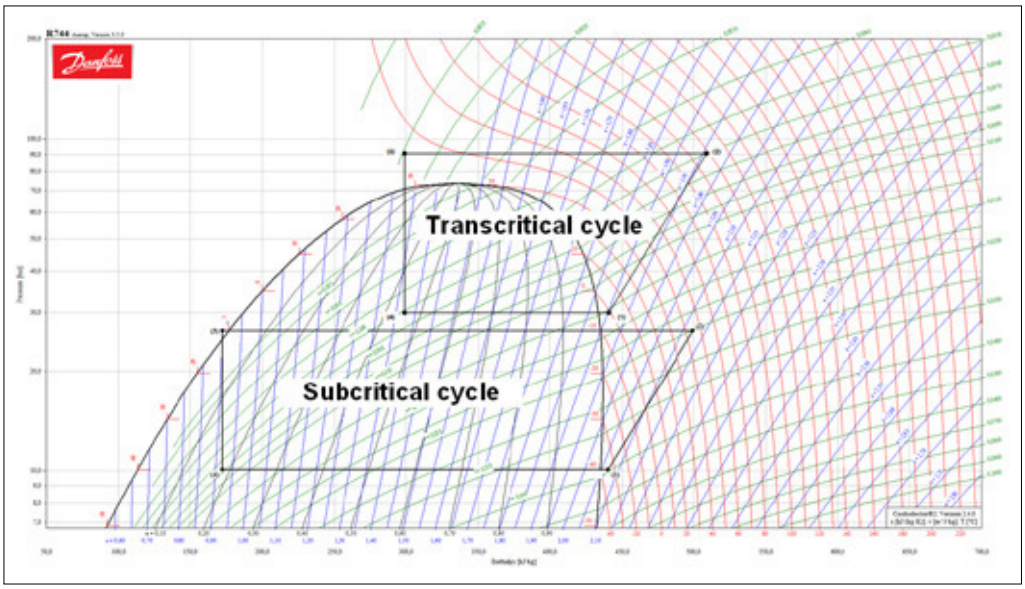

Figure 10.1.1: Log(p)-h diagram for CO2 refrigeration processes

10.2 Comparision of line sizings in CO_2 systems

The high pressure of CO_2 offers advantages with regard to the diameter of pipework that is installed, as gas density is high due to the pressure. Comparing to R134a and R717, the differences are clear.

A comparison of pump-circulating systems shows that for 'wet return' lines, CO_2 systems require much smaller pipes than ammonia or R134a (table 3). In CO_2 'wet return' lines, the allowable pressure drop for an equivalent temperature drop is approximately 10 times higher than for ammonia or R134a wet return lines. This phenomenon is a result of the relatively high density of the CO_2 vapour. The below comparison is based on a circulating rate of 3. The results are slightly different if the circulating rate is optimised for each refrigerant.

Comparison of pipe cross section area **Wet return / liquid lines**				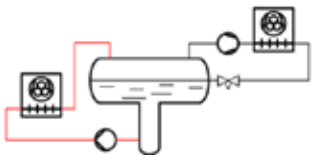		
	Refrigerant			R134a	R717	CO_2
	Capacity	kW	[TR]	250 [71]	250 [71]	250 [71]
Wet return line	ΔT	K	[F]	0.8 [1.4]	0.8 [1.4]	0.8 [1.4]
	Δp	bar	[psi]	0.0212 [0.308]	0.0303 [0.439]	0.2930
	Velocity	m/s	[ft/s]	11.0 [36.2]	20.2 [66.2]	8.2 [26.9]
				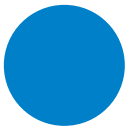		
	Diameter	mm	[in]	215 [8.5]	133 [5.2]	69 [2.7]
	Area	mm^2	[in^2]	36385 [56.4]	13894 [21.54]	3774 [5.85]
Pumped liquid line	Velocity	m/s	[ft/s]	0.8 [2.6]	0.8 [2.6]	0.8 [2.6]
	Diameter	mm	[in]	61 [2.4]	36 [1.4]	58 [2.3]
	Area	mm^2	[in^2]	2698 [4.6]	998 [1.55]	2609 [4.04]
Total area		mm^2	[in^2]	39353 [61.0]	14895 [23.08]	6382 [9.89]

Leqv = 50 m / 194 ft, Pump circulation rate 3, Evaporating temperature -40 °C / -40 °F

Table 10.2: Comparison of pipe sizes – wet return & pumped liquid lines

© Danfoss | Climate Solutions | 2022.10

In the comparison of 'dry suction' lines, the results are very nearly the same as in the previous comparison, in terms of both pressure drop and line size.

Comparison of pipe cross section area **Dry suction / Condenser liquid**				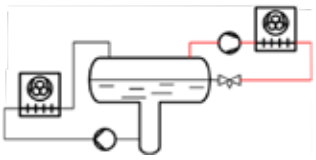		
	Refrigerant			R134a	R717	CO_2
	Capacity	kW	[TR]	250 [71]	250 [71]	250 [71]
Dry suction	ΔT	K	[F]	0.8 [1.4]	0.8 [1.4]	0.8 [1.4]
	Δp	bar	[psi]	0.0212 [0.308]	0.0303 [0.439]	0.2930
	Velocity	m/s	[ft/s]	20.4 [67]	37.5 [123]	15.4 [51]
	Diameter	mm	[in]	168 [6.6]	102 [4.0]	53 [2.1]
	Area	mm^2	[in^2]	22134 [34.3]	8097 [12.55]	2242 [3.48]
Condenser Liquid line	Velocity	m/s	[ft/s]	0.8 [2.6]	0.8 [2.6]	0.8 [2.6]
	Diameter	mm	[in]	37 [1.5]	21 [0.8]	35 [1.4]
	Area	mm^2	[in^2]	1089 [1.69]	353 [0.55]	975 [1.51]
Total area		mm^2	[in^2]	23223 [36.0]	8450 [13.10]	3217 [4.99]

Leqv = 50 m / 194 ft, Pump circulation rate 3, Evaporating temperature -40 °C / -40 °F

Table 10.3: Comparison of pipe sizes – dry suction & HP liquid lines

Comparison of pipe cross section area
Dry suction / Liquid

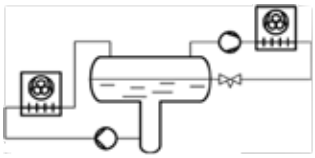

	Refrigerant			R134a	R717	CO_2
	Capacity	kW	[TR]	250 [71]	250 [71]	250 [71]
Dry suction	Area	mm²	[in²]	22134 [34.3]	8097 [12.55]	2242 [3.48]
Liquid line	Area	mm²	[in²]	1089 [1.69]	353 [0.55]	975 [1.51]
Total	Area	mm²	[in²]	23223 [36.0]	8450 [13.1]	3217 [4.99]
Relative cross section area				7.2	2.6	1.0
Liquid cross section area			%	5	4	30
Vapour cross section area			%	95	96	70

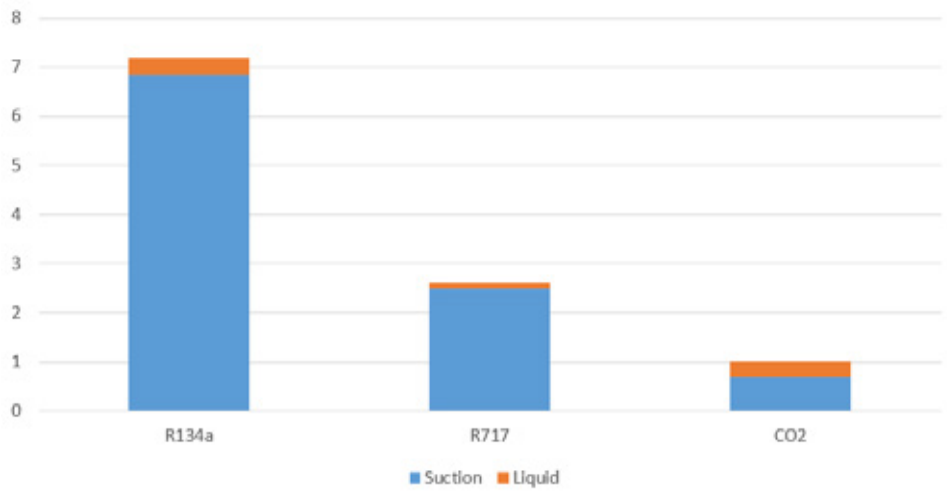

Leqv = 50 m / 194 ft, Pump circulation rate 3, Evaporating temperature -40 °C / -40 °F, Condensing temp -15 °C / -5 °F

Table 10.4: Comparison of pipe sizes

For both recirculating and dry expansion systems, calculated sizes for CO_2 liquid lines are much larger than those for ammonia, but only slightly larger than those for R134a (table 1 and 2). This can be explained by ammonia's much greater latent heat relative to CO_2 and R134a.

With reference to the table showing the relative liquid and vapour cross-sectional areas for the three refrigerants (table 1), the total cross-section area for the CO_2 system is approximately 2.5 times smaller than that of an ammonia system and approximately seven times smaller than that of R134a. This result has interesting implications for the relative installation costs for the three refrigerants.

Due to the relatively small vapour volume of the CO_2 system and large volumetric refrigeration capacity, the CO_2 system is relatively sensitive to capacity fluctuations. It is therefore important to design the liquid separator with sufficient volume to compensate for the small vapour volume in the pipes.

The required compressor capacity for identical refrigeration loads is calculated for the three refrigerants (table 4). As can be seen, the CO_2 system requires a much smaller compressor than the ammonia or R134a systems.

For compressors of identical displacement, the capacity of the compressor for CO_2 is times greater than for ammonia and 13 times greater than for R134a.

The subcooling produced in a liquid riser of a given height 'H' is calculated for the three refrigerants (table 5). The subcooling for the CO_2 liquid riser is much smaller than that for ammonia and R134a. This characteristic must be noted when designing CO_2 systems in order to prevent cavitation and other problems with liquid CO_2 pumps.

The CO_2 compressors also benefit from the high suction density, so the suction swept volume of the CO_2 compressors is much smaller than for R134a and R717, however it must be noted that these numbers are only for the low-pressure part of the system (condensing temperature is -15 °C / -5 °F).

© Danfoss | Climate Solutions | 2022.10

Comparison of compressor displacement			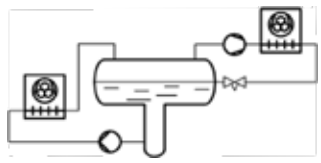		
Refrigerant			**R134a**	**R717**	**CO_2**
Capacity	**kW**	**[TR]**	250 [71]	250 [71]	250 [71]
Required compressor displacement	**m³/hr**	**[ft/min]**	1628 [57489]	1092 [38578]	124 [4387]
Relative displacement			13.1	8.8	1.0
Evaporating temperature -40 °C / -40 °F, Condensing temp -15 °C / -5 °F					

Table 10.5: Comparison of compressor displacement

One thing to consider is that the beneficial relationship between CO_2 saturation pressure and temperature, which allows for high pressure losses without significant temperature loss, leads to another effect. In a pump drop leg from a pump separator, the pressure increases due to the liquid column on top and thus effectively creates subcooling of the liquid in the bottom of the leg. In this case, the CO_2 pressure/temperature relationship becomes a disadvantage. The subcooling in K/F is much smaller than with other refrigerants. This is significant, as even a small heat ingress in the drop leg moves CO_2 closer to saturation – in % of the total subcooling – than the other refrigerants. And since the subcooling expresses the height available to the pump as NPSH, it can easily be too little, leading to cavitation.

Comparison of pressure / subcooling produced in liquid columns			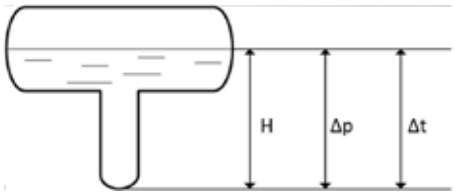		
Refrigerant			**R134a**	**R717**	**CO_2**
Capacity	**kW**	**[TR]**	250 [71]	250 [71]	250 [71]
Height of column 'H'	**m**	**[ft]**	3 [9.8]	3 [9.8]	3 [9.8]
Pressure produced by column 'Δp'	**bar**	**[psi]**	0.418 [6.06]	0.213 [2.95]	0.329 [4.77]
Subcooling produced by column 'Δt'	**K**	**[F]**	14,91 [26.8]	5.21 [9.4]	0.88 [1.6]
Evaporating temperature -40 °C / -40 °F					

Table 10.6: Comparison of pressure/subcooling

CO_2 is most commonly used in cascade or hybrid system designs in industrial refrigeration. CO_2 cascade systems can be designed in different ways, e.g. direct expansion systems, pump-circulating systems, CO_2 in volatile secondary 'brine' systems, or combinations of these.

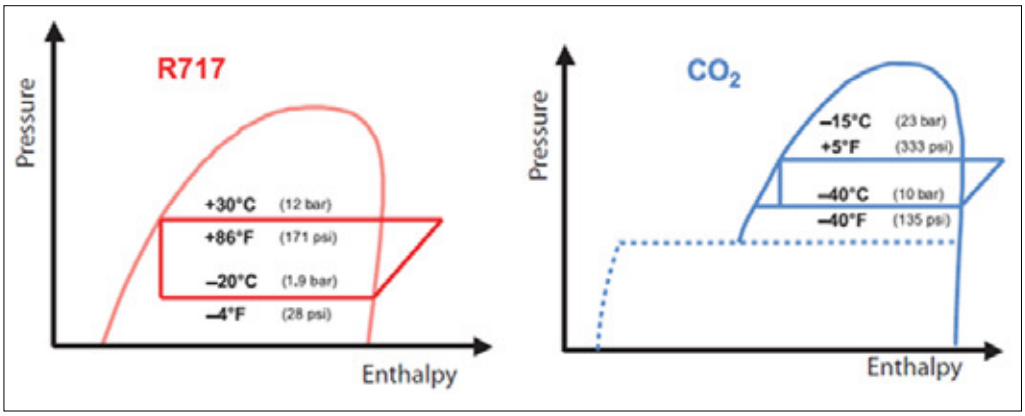

Figure 10.2.1: Comparison between R717 and CO_2 cycles

10.3 Subcritical CO_2 systems

This section covers subcritical CO_2 systems in industrial applications. Transcritical CO_2 systems are described in chapter 11.

CO_2 is typically used as the refrigerant in the low temperature cycle due to its excellent properties at temperatures below -10 °C (14 °F) regarding heat transfer and required pump power for pump circulation.

Figure 10.3.2 shows a low-temperature refrigerating system using CO_2 as a phase-change refrigerant in a cascade system with ammonia on the high-pressure side. The CO_2 system is a pump-circulating system where the liquid CO_2 is pumped from the receiver to the evaporator, where it is partly evaporated, before it returns to the receiver. The evaporated CO_2 is then compressed in a CO_2 compressor, and condensed in the CO_2-NH_3 heat exchanger. The heat exchanger acts as an evaporator in the NH_3 system. Compared to a traditional ammonia system, the ammonia charge in the cascade system can be reduced by a factor of approximately 10.

The cascade system shown also includes a CO_2 hot gas defrosting system, which is driven by a separate CO_2 defrost compressor. The CO_2 defrost compressor delivers a discharge temperature, and condensation pressure sufficiently high to do hot gas defrost.

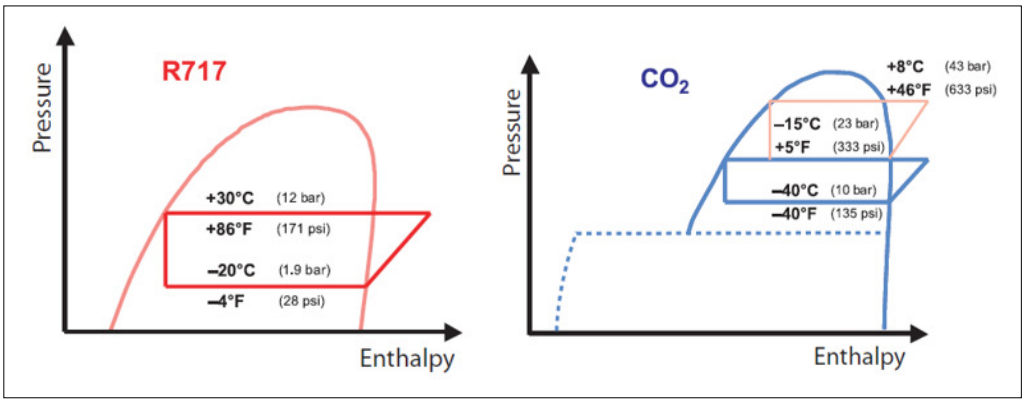

Figure 10.3.1: Comparison between R717 and CO_2 defrost

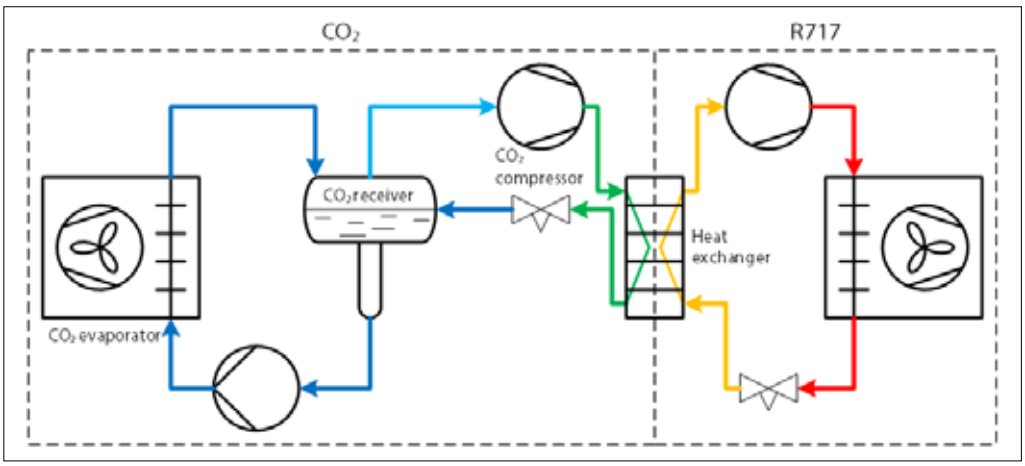

Figure 10.3.2: Principal diagram - Cascade system with 1 evaporating level and CO_2 hot gas defrost

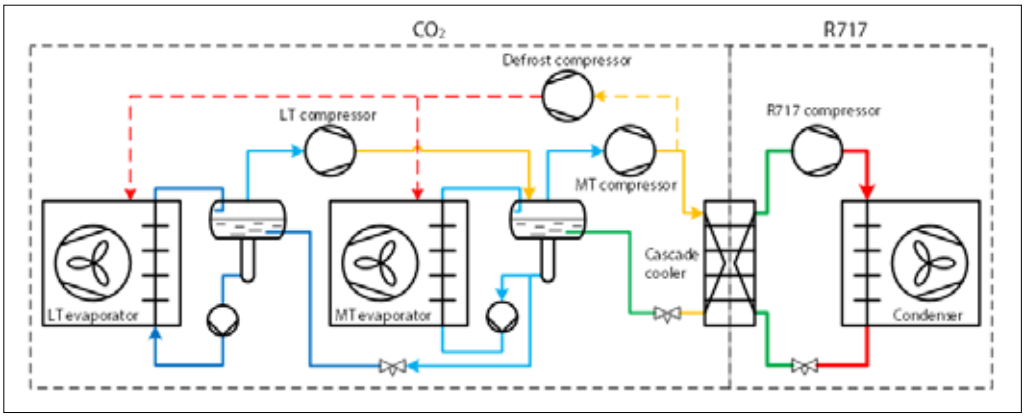

Figure 10.3.3: Principle drawing - cascade system with 2 evaporation temperature levels and CO_2 hot gas defrost

© Danfoss | Climate Solutions | 2022.10

10.3.4 and 10.3.5 shows a low-temperature refrigeration system using CO_2 as a 'brine' system with ammonia on the high- pressure side.

The CO_2 system is a pump-circulating system, where the liquid CO_2 is pumped from the receiver to the evaporator. Here it is partly evaporated, before it returns to the receiver. The evaporated CO_2 is then condensed in the CO_2-NH_3 heat exchanger. The heat exchanger acts as an evaporator in the NH_3 system. The CO_2 brine system is driven by the liquid pump, rather than by a compressor.

Depending on the evaporation temperature of the CO_2, it can be more beneficial to have compression in both cycles. If the evaporation temperature is low, e.g. below -25 °C (-13 °F), there is a benefit to having compression in the CO_2 cycle, since CO_2 compressors are more efficient than ammonia compressors at these temperature levels. With a higher CO_2 evaporation temperature, e.g. above -15 °C (5 °F), the compressor work can be allocated to the ammonia cycle for reasons of simplicity.

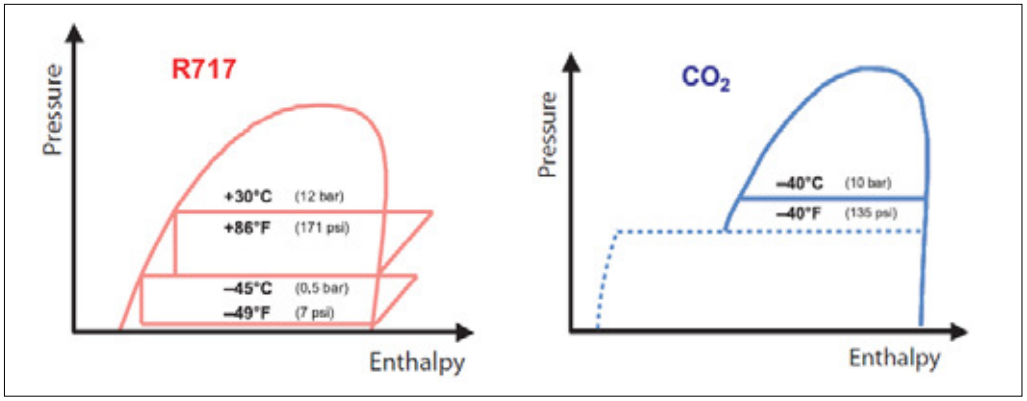

Figure 10.3.4: Comparison between R717 two stage and CO_2 volatile brine cascade cycles

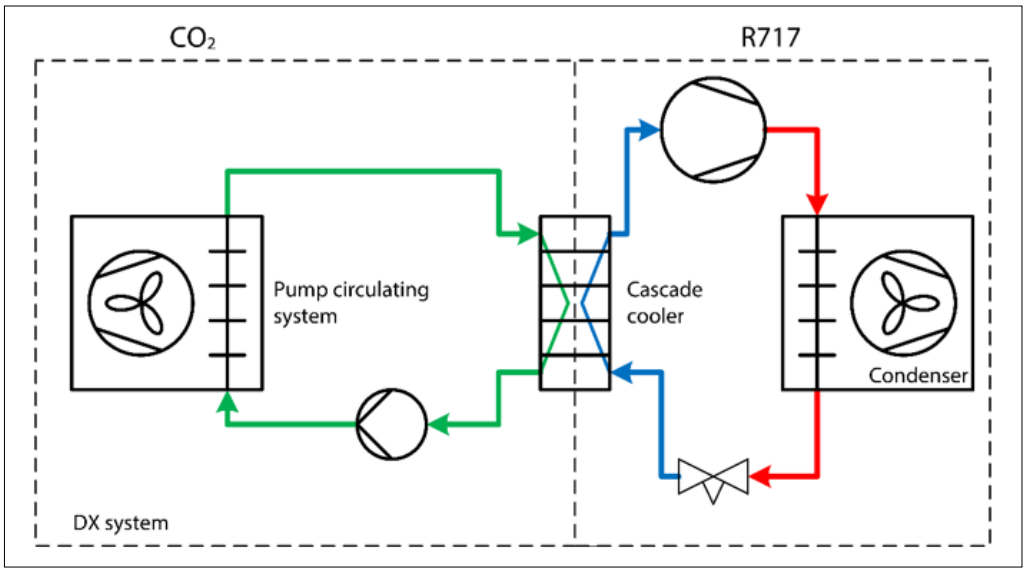

Figure 10.3.5: Principal diagram - Cascade system with CO_2 as a volatile brine system

Figure 10.3.6 shows a mixed system with flooded and DX-system, e.g. for a refrigeration system in a supermarket, where two temperature levels are required. The low-temperature evaporator on the CO_2 side could also be a flooded evaporator with a low-pressure separator, but for the sake of simplicity it is shown as a DX evaporator.

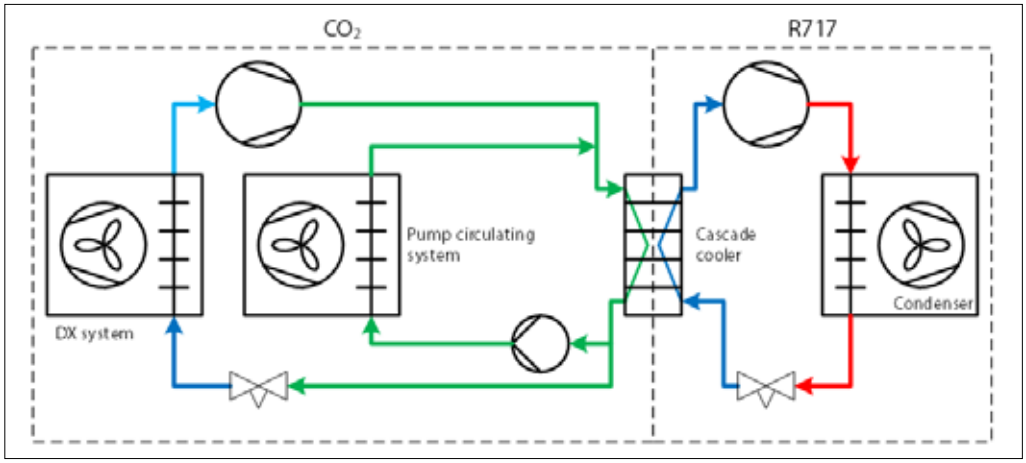

Figure 10.3.6: Principal diagram - Cascade system with two temperature levels (supermarket system)

10.3.1 Efficiency

In CO_2-NH_3 cascade systems, it is necessary to use a heat exchanger. Using heat exchangers reduces system efficiency, due to the necessity of having a temperature difference between the fluids.

However, compressors running with CO_2 are more efficient and heat transfer is greater. The overall efficiency of a CO_2-NH_3 cascade system is not reduced when compared to a traditional NH_3 system.

It is seen from the chart that the ammonia/CO_2 cascade system performs better than both ammonia systems. This confirms that CO_2 is an excellent refrigerant when running a cascade system with CO_2 in the low temperature cycle.

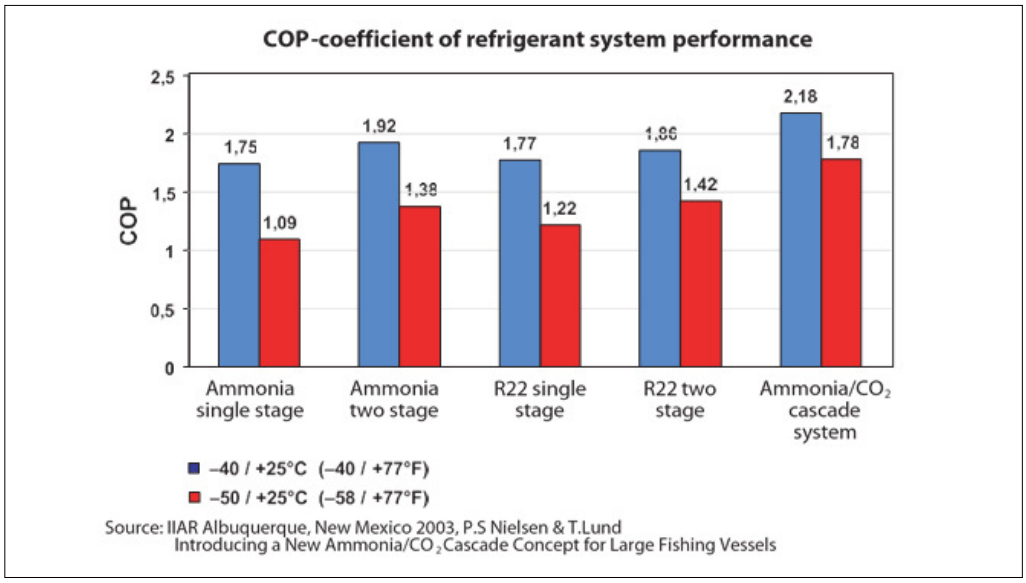

Figure 10.3.7: COP comparison of refrigeration systems

10.3.2 Design pressure

When determining the design pressure for CO_2 systems, the two most important factors to consider are:

- Pressure during standstill
- Pressure required during defrosting

The typically used design pressures for subcritical CO_2 systems are shown in Figure 10.3.10 and 10.3.11. Each dashed area represents a 'zone' for design pressure, so components in that 'zone' should be able to withstand the indicated pressure.

© Danfoss | Climate Solutions | 2022.10

10.3.3 Stand-still pressure

Importantly, without any pressure control, at standstill, i.e. when the system is turned off, the system pressure will increase due to heat gain from the ambient air. If the temperature were to reach 0 °C (32 °F), the pressure would be 34.9 bar (505 psi) or 57.2 bar (830 psi) at 20 °C (68 °F). For industrial refrigeration systems, it would be quite expensive to design a system that can withstand the equalizing pressure (i.e. saturation pressure corresponding to the ambient temperature) during standstill. Therefore, installing a small auxiliary condensing unit is a common way of limiting the maximum pressure during standstill to a reasonable level, e.g. 30 bar (435 psi).

10.3.4 Defrosting pressure

With CO_2, many different methods of defrosting can be applied (e.g. natural, water, electrical, hot gas). Hot gas defrosting is the most efficient, especially at low temperatures, but also demands the highest pressure. With a design pressure of 52 bar (754 psi), it is possible to reach a defrosting temperature of approx. 10 °C (50 °F).

The saturated pressure at 10 °C (50 °F) is 45 bar (652 psi). By adding 10% for the safety valves and approximately 5% for pressure peaks, the indicated maximum permissible working pressure would be 52 bar (754 psi) (Figure 10.3.8), also called the design pressure.

In Figure 10.3.8, the practical limits for design pressure are illustrated based on high-end safety valves (closing tolerance of 10% of design pressure). There are different standards regarding the closing tolerance of safety valves for when they should reseat. For ISO standards, the closing tolerance of safety valves is up to 15% of the design pressure for reseating, while for American standards it is even higher. If such safety valves are used, the design pressure of the system should be correspondingly higher, or the saturated pressure must be lower.

Since the pressure in the system will fluctuate, 5% closing tolerance is added to account for pressure peaks, so the safety valve will not open and reseat constantly.

In Figure 10.3.9 the opening and reseating of a safety valve is shown compared to the pressure in the system.

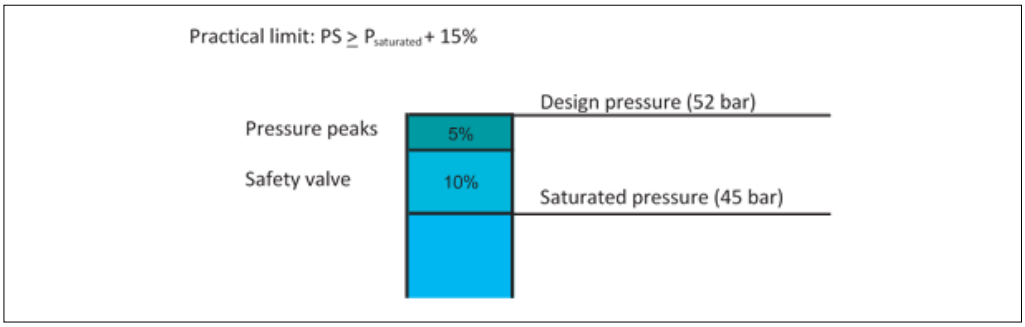

Figure 10.3.8: Design Pressure

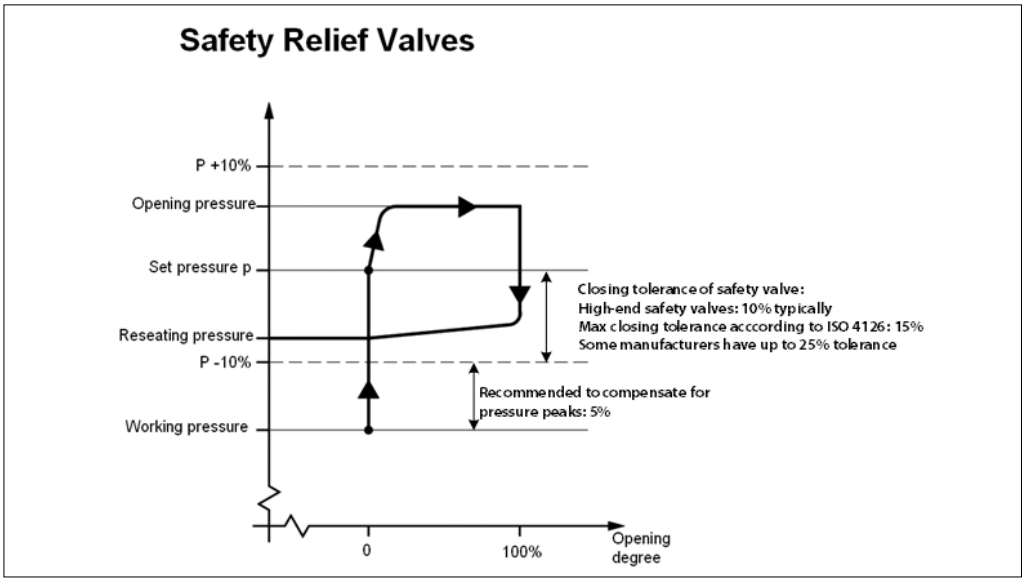

Figure 10.3.9: Opening and reseating of a safety valve

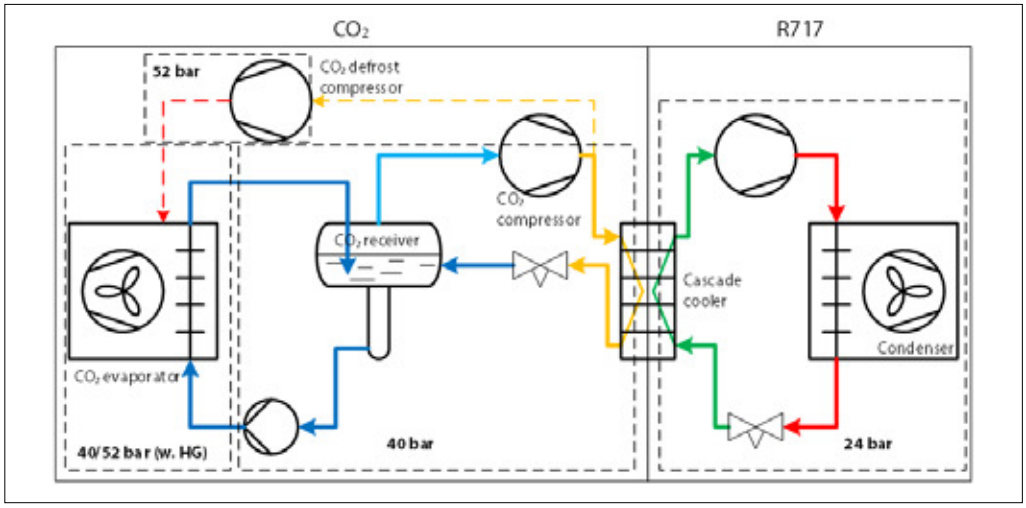

Figure 10.3.10: Typically used design pressures in CO_2/ammonia cascade system

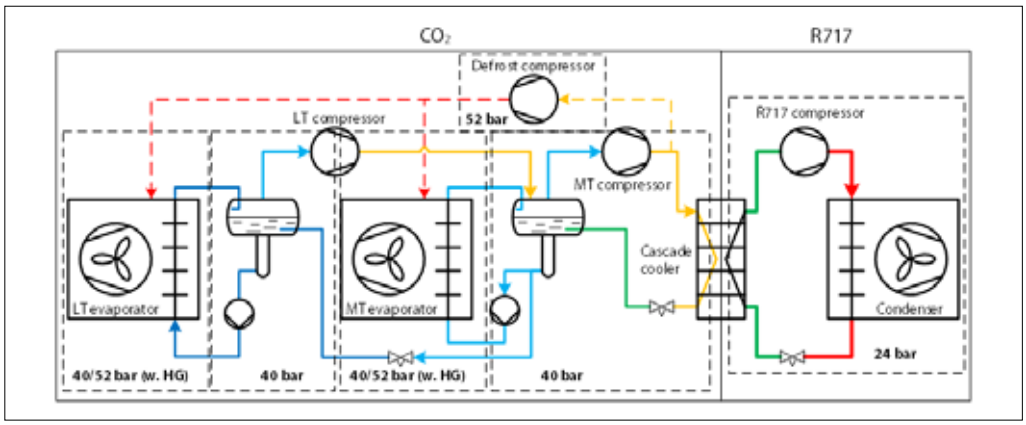

Figure 10.3.11: Typically used design pressures in 2-stage CO_2/ammonia cascade system

10.4 Special considerations for CO_2 refrigeration systems

10.4.1 Safety valve

CO_2's particularly high triple point can cause solid CO_2 to form under certain conditions. Figure 10.4.1 shows the expansion processes occurring in pressure relief valves starting at three different conditions. If the set pressure of a pressure relief valve in the vapour phase is 35 bar (507 psi) or less, e.g. the rightmost line, the pressure in the relief line will pass through the triple point at 5.2 bar (75.1 psi). Once below the triple point, the CO_2 will be pure vapour.

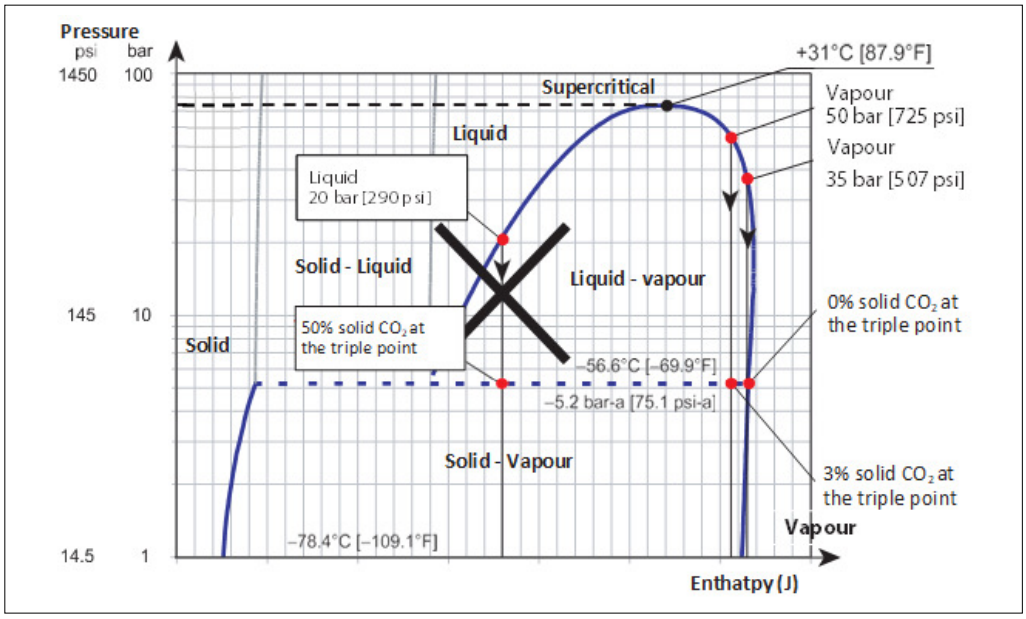

Figure 10.4.1: CO_2 expansion - phase changes

© Danfoss | Climate Solutions | 2022.10

If the set pressure of a safety valve in the vapour phase is 50 bar (725 psi), e.g. the middle line, the relief line pressure will pass the triple point and 3% of the CO_2 will be converted into solid during relief. In a worst-case scenario (e.g. a long relief line with many bends), solid CO_2 may block this line. The most effective solution to this problem would be to mount the safety valve without an outlet line and relieve the system directly to the atmosphere. The phase change of the CO_2 does not take place in the valve, but just after the valve (in this case, in the atmosphere).

If a pressure relief valve is set to relieve liquid at 20 bar (290 psi), the relief products would pass through the triple point, whereupon 50% of the CO_2 would convert into solid upon further relief, subjecting the relief line to a high risk of blockage.

Thus, to safely protect liquid lines against formation of dry ice, connect safety relief valves to a point in the system at a pressure higher than the triple point pressure of 5.2 bar (75.1 psi), e.g. internal safety valves only for liquid lines.

10.4.2 Evacuating CO_2 systems prior to start-up

Because of ammonia's high affinity to water, evacuation of such systems is not as critical as it is for HFC and CO_2 systems. CO_2 is very sensitive to water in the refrigeration system, thus starting up with a dry system is the key to keeping a dry system. Refrigeration pipes are usually left open to the atmosphere when the system is being constructed. Therefore, water can condense in the pipes during the night, and this is why it is important to evacuate all water and air from the system before charging refrigerant.

When evacuating a system before first start-up after construction or maintenance, two things are achieved:

- Removal of non-condensable gases, for efficient condenser operation
- Removal of water

The boiling temperature of the water will reduce as the pressure is reduced in the system. Residual heat from pipes and vessel walls can evaporate the remaining water if it is well-distributed in the system.

The recommendations according to IIAR are as follows:

The vacuum pump capacity should be selected according to the internal volume of the refrigeration system, so that the system can be evacuated to a vacuum pressure of 0.65 kPa (5,000 microns mercury) where the boiling point of water is around 1 °C. Note that a lower vacuum can result in the remaining water freezing. This causes the evaporation to be much slower, possibly leading to the incorrect conclusion that the system is empty of water.

Normally multiple evacuations are performed. A vacuum is pulled to 0.65 kPa (5,000 microns). The vacuum is relieved with dry nitrogen, which then absorbs more of the residual water vapour in the system. Another vacuum is pulled to 0.65 kPa (5,000 microns). If the pressure drops slowly or resides in between 1.32 kPa (10,000 microns) and 0.65 kPa (5,000 microns), there is still water in the system and an additional evacuation is recommended. The last vacuum should be broken with refrigerant-grade CO_2 VAPOUR.

WARNING: THE VACUUM MUST NEVER BE BROKEN WITH LIQUID CO_2. This will form dry ice, clog pipes and immediately reduce the temperature to -78.5 °C (-109.3 °F).

10.4.3 Charging CO_2

It is important to start up with CO_2 in the vapour phase and continue until the pressure has reached 5.2 bar (75.1 psi). It is therefore strongly recommended to write a procedure for charging a CO_2 system. One must be aware when charging a refrigerant system that until the pressure reaches the triple point, the CO_2 can only exist as a solid or vapour inside the refrigeration system. Also, the system will exhibit very low temperatures until the pressure is sufficiently raised (Figure 10.11.1). For example, at 1 bar (14.5 psi) the sublimation temperature will be –78.4 °C (–109 °F).

10.4.4 Release of CO_2 refrigerant

From Figure 10.4.1, the expansion process of CO_2 is shown when it is released from the system. It is important to release CO_2 from the gas side of the system to minimize dry ice formation in the pressure relief valves.

Dry ice plugs in the pressure relief valves can give the false impression that pressure has been released from the system, when that may not be the case. Large pressure differences might still be present between the system parts, since dry ice plugs can be formed inside the system and create pressure differences. Therefore, it is recommended that pressure gauges be mounted on the vessel from where the CO_2 is released.

CO_2 should always be released to the atmosphere. When releasing CO_2, the room from where the CO_2 is released to the atmosphere should be thoroughly ventilated during the release. If the release to the atmosphere is not done properly, the released CO_2 could be leaked to the working room. The CO_2 gas is heavier than air and sinks to the floor or lower-level locations, e.g. basements. This can create dangerous situations if the necessary precautions are not taken, since large concentrations of CO_2 could be lethal for humans in the worst-case scenario.

10.4.5 Filter cleaning

The same considerations apply to cleaning liquid strainers or filters. Even though CO_2 is non-toxic, one cannot just drain the liquid out of the system. Once the liquid CO_2 contacts the atmosphere, the liquid phase will partly change into the solid phase, and the temperature will drop dramatically, as in the example described above.
This sudden temperature drop is a thermal shock to the system materials and can cause mechanical damage to the materials. Such a procedure would be a code violation because this equipment is not normally designed for such low temperatures.

10.4.6 Trapped liquid

Trapped liquid is a potential safety risk in refrigerant systems and must always be avoided. This risk is even higher for CO_2 systems than for ammonia or R134a systems. The diagram in figure 10.4.2 shows the relative liquid volume change for the three refrigerants. As shown, liquid CO_2 expands much more than ammonia and R134a, especially when the temperature approaches CO_2's critical point.

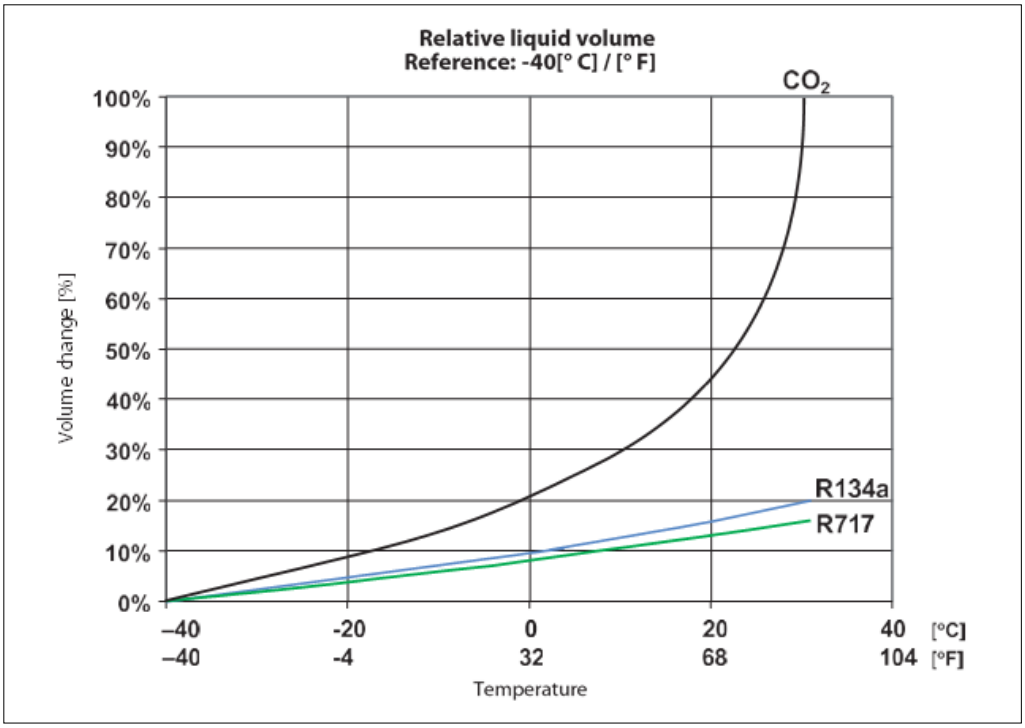

Figure 10.4.2: Relative liquid volume change of refrigerants

10.4.7 Trapped CO_2 gas

Trapped CO_2 in the system will increase the pressure when the temperature increases in the system. Compared to other refrigerants, the change in pressure for CO_2 when heated 1 °C / 1 °F is much higher.

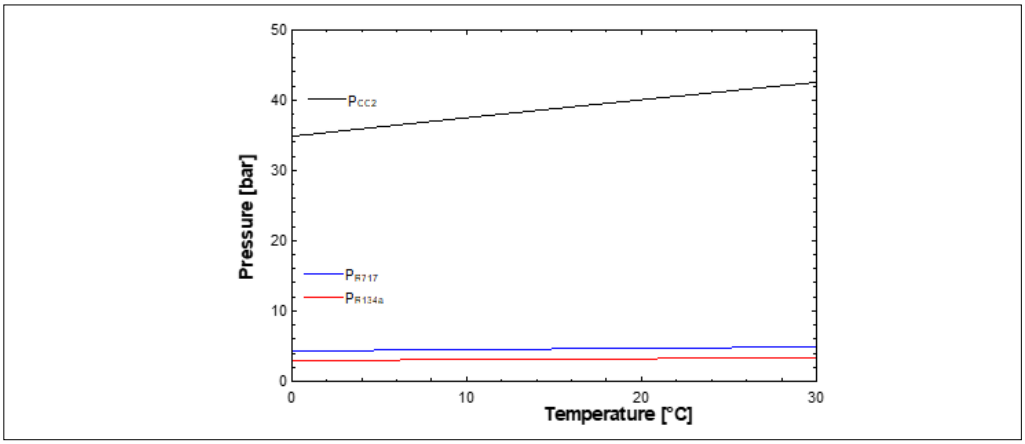

Figure 10.4.3: Pressure change in trapped gas

© Danfoss | Climate Solutions | 2022.10

The graphs above show the change in pressure caused by increasing the temperature of trapped refrigerant vapour. This could be a situation that would occur during standstill. CO_2 is compared to ammonia and R134a, which shows that the pressure of CO_2 vapour is much more sensitive to increasing temperature than other common refrigerants in industrial systems.

10.4.8 Leaks in CO_2-ammonia cascade systems

The most critical leak in a CO_2-ammonia cascade system is in the heat exchangers between CO_2 and ammonia. The pressure of the CO_2 will be higher than the ammonia, so the leak will occur into the NH_3 system, which will become contaminated. The solid substance ammonium carbamate is formed immediately when CO_2 comes into contact with ammonia. Ammonium carbamate is a highly corrosive powder.

$$\mathbf{CO_2 + 2 \cdot NH_3 \rightarrow H_2NCOONH_4}$$

CO_2 + ammonia = ammonium carbamate

The ammonium carbamate should by all means be avoided, as it is corrosive. **There is no common agreement on which cleaning method should be used to remove the ammonium carbamate, thus no recommendations will be given in this document**. However, some have experience with cleaning up contaminations with hot air or hot water above 70 °C.

10.4.9 Material compatibility

Unlike ammonia, CO_2 is compatible with almost all common metallic materials. There are no restrictions, from a compatibility point of view, when using copper or brass. The compatibility of CO_2 and polymers is much more complex. Because CO_2 is a very inert and stable substance, critical chemical reactions with polymers are not a problem. The main concern with CO_2 is the physiochemical effects, such as permeation, swelling and the generation of cavities and internal fractures. These effects are connected with the solubility and diffusivity of CO_2 in the material concerned.

Danfoss has carried out a number of tests to ensure that components released for use with CO_2 can withstand the impact of CO_2 in all aspects.

These tests have shown that CO_2 is different, and modifications must be made on some products. The large amount of CO_2 that can dissolve in polymers must be taken into consideration. Some commonly used polymers are not compatible with CO_2, and others require different fixing methods, e.g. sealing materials. When the pressure is close to the critical pressure and the temperature is high, the impact on polymers is much more extreme.

Water in CO_2 systems can cause problems with materials, since water will react with CO_2 to form carbonic acid. The carbonic acid is corrosive and corrodes metallic surfaces in particular. Water content in the refrigeration system should be minimized through proper evacuation before start-up and proper removal of water. This is described in section 10.12.5.

10.5 Conclusion

CO_2 has good properties, particularly at low temperatures, but it is not a substitute for ammonia. The most common industrial CO_2 refrigeration systems are cascade systems with ammonia on the high-temperature side of the system.

CO_2 is in many aspects a very uncomplicated refrigerant, but it is important to realize that CO_2 has some unique features compared with other common refrigerants. Knowing the differences, and taking these into account during design, installation, commissioning and operation, will help to avoid problems. The availability of components for industrial CO_2 refrigeration systems with pressures up to approximately 52 65 bar is good. Several manufacturers of equipment for traditional refrigerants can also supply some components for CO_2 systems. The availability of components for high-pressure industrial CO_2 refrigeration systems is growing, but the availability of critical components is an important factor in the growth rate of CO_2 use.

10.6 Safety and gas detection

CO_2 is an odorless, colorless substance classified as a non-flammable and non-toxic refrigerant, but even though all of these properties may seem very positive, CO_2 also has some disadvantages.

Since CO_2 is odorless, it is not self-alarming if leaks occur (ref. (6)).

CO_2 is heavier than air, so it sinks to the ground or floor level. This can create dangerous situations, especially in pits or confined spaces. CO_2 can displace oxygen so much that the resulting mixture is lethal. The relative density of CO_2 is 1.529 (air = 1 at 0 °C (32 °F)). This risk requires special attention during design and operation. Leak detection and / or emergency ventilation are always necessary.

Compared to ammonia, CO_2 is a safer refrigerant even though it is not self-alarming. The TLV (threshold limit value) is the maximum concentration of vapour CO_2 in air which can be tolerated over an eight-hour shift for 40 hours a week.

The TLV safety limit is 25 ppm for ammonia and 5000 ppm (0.5%) for CO_2.

Approx. 0.04% CO_2 is present in the air.
With higher concentrations, some adverse reactions are reported:

2%	50% increase in breath rate
3%	100% increase in breath rate
5%	300% increase in breath rate
8-10%	Natural respiration is disrupted and breathing becomes almost impossible. Headache, dizziness, sweating and disorientation
> 10%	Can lead to loss of consciousness and death
> 30%	Quickly leads to death

10.7 Gas detection

The requirements for gas detection vary across different countries. Below, one can find an overview of gas detection requirements two of the most relevant regulations for refrigeration systems; in Europe: EN 378:2016 and in the USA: ASHRAE 15-2016.

Location of gas detectors

There are two methods of locating sensors:

Point Detection, where sensors are located as near as possible to the most likely sources of leakage.

Perimeter Detection, where sensors surround the hazardous area completely.

The most appropriate method or a combination is selected depending on the size and nature of the site.

10.7.1 Location guidelines

Detectors shall be located high/low according to the density of the actual refrigerant. Since CO_2 is heavier than air, it will drop to the floor, which is why it is recommended that CO_2 sensors be located 30-40 cm from the floor (below the breathing zone). For CO_2 monitoring when CO_2 is used in a process (rather than as a refrigerant), the recommendation is to locate the sensor in the breathing zone, 1.5 metres from the floor, and where people frequent.

If mechanical ventilation exists in a machinery room, air will move towards the fan.
In problematic locations, a smoke tube can indicate air movements in a space and assist in the location of sensors.

Consideration should also be given to the possibility of pockets of gas collecting in the event of a leak.

Locations requiring most protection in a machinery or plant room would be around gas boilers, compressors, pressurized storage tanks, gas cylinders, storage rooms or pipelines.

Most vulnerable are valves, gauges, flanges, T-joints, filling or draining connections, mechanical joints, seals, and where there are regular changes in the system's temperature and pressure or excessive vibration, such as compressors and evaporator control valves.

Sensors should be positioned a little way back from any high-pressure parts to allow gas clouds to form. Otherwise any leakage of gas is likely to pass by in a high-speed jet and will not be detected by the sensor.

Accessibility to enable calibration and service in the future must be considered.

10.7.2 Number of gas detectors in a facility

The requirements for the number of gas detectors in a facility are not specifically stated in standards. However, there are some general guidelines to follow:

A detector can normally cover an area of about 50-100 m^2 (538-1076 ft^2) depending on the actual condition of the space to be covered. In spaces with several obstructions and a lack of ventilation, the coverage is approx. 50 m^2 (538ft^2). In non-obstructed spaces with good mechanical ventilation, the coverage can be increased up to approx. 100 m^2 (1076ft^2).

Machinery rooms: It is recommended that detectors are placed below or at both sides of compressors or other non-static parts of the system or downwind of such equipment, in the direction of continuously operating ventilation extractors.

Danfoss can provide Plug and Play gas detection solutions for industrial CO_2 systems with pre-calibrated digital gas detectors and sensors.

© Danfoss | Climate Solutions | 2022.10

10.8 Pressure control CO_2 systems

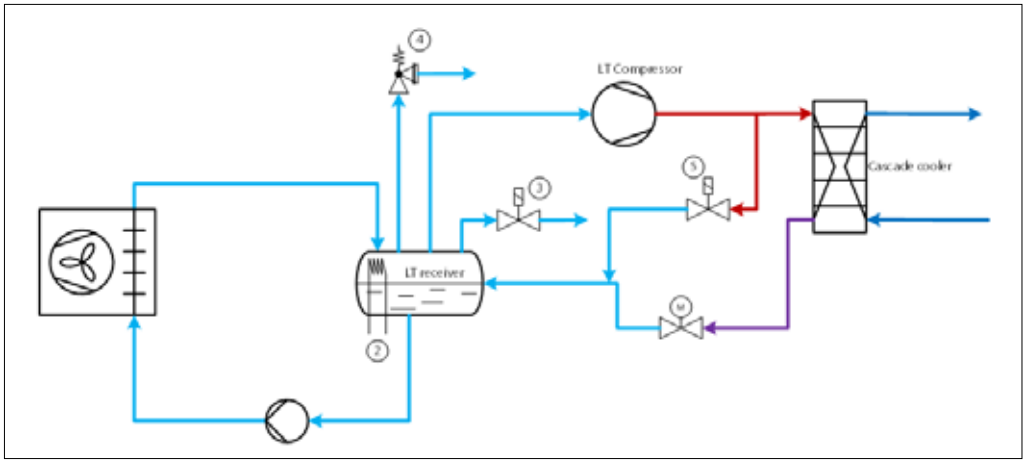

Certain measures must be taken when controlling CO_2 systems. CO_2 systems are operated above atmospheric pressure at all times. It is therefore important to have systems and procedures for maintaining pressure in the CO_2 system within the operating limits and for avoiding pressure loss which can be critical to the system, as liquid CO_2 cannot exist below 5.18 bar.

10.8.1 Possible control devices in case of high pressure in the CO_2 separator

If the pressure in the CO_2 separator rises above the normal range, the following steps can be taken to minimize the escape of CO_2:

The CO_2 compressor can be forced to start, and the CO_2 liquid pump forced to stop to prevent relatively warm liquid returning to the CO_2 separator.

If there is a fault preventing the CO_2 compressor from starting, the pressure will continue to increase. This will force the standstill unit to start.

If the pressure continues to rise, a solenoid valve can be forced open to provide a controlled release of the CO_2 pressure down to a defined pressure.

The last device is the safety valve, which operates at its set pressure.

10.8.2 Possible control devices in case of low pressure in the CO_2 separator

If the pressure in the CO_2 separator drops below the normal operating range, the following steps can be taken to minimize the risk of dry ice formation:

Opening a bypass valve enables the system to maintain a sufficiently high suction pressure in the CO_2 separator. This also prevents stopping of the compressor if there is a sudden drop in cooling load, e.g. if there is a freezing process with variations in the cooling load. This ensures that the compressor keeps running and keeps the system ready for a sudden increase in the cooling load.

The CO_2 compressor can be forced to stop, thus preventing the formation of dry ice.

10.8.3 Compressor control

There is no difference in the way the compressors can be controlled in CO_2 systems compared to a normal industrial refrigeration installation, but as they are cascade systems, it must be ensured that the NH_3 compressor is started / ready to start before the start signal is given to the CO_2 compressor (see section on compressor control).

10.8.4 Liquid level control

There is no difference in the way the liquid level can be controlled in CO_2 systems compared to a normal industrial refrigeration installation (see section on liquid level control). The Danfoss liquid level sensor AKS 4100 can handle the low dielectric constant of CO_2 and is therefore compliant for use in CO_2 systems for liquid level control.

10.9 Cascade system controls

For cascade systems, two refrigeration cycles must be controlled carefully in order to function correctly.
Control of cascade systems can be divided into:

- Condenser capacity control
- Compressor capacity controls
- Cascade injection control

10.9.1 Condenser capacity control

Capacity control of the condenser can be done by step regulation or speed control of the fans. As regulating input for the capacity control, the condenser pressure should be selected. The reference for the regulation can be defined in two ways; either as a fixed reference or as a reference that varies according to the outdoor temperature. The reference for the condensing pressure is set in °C (°F).

10.9.2 Compressor capacity controls

For a CO_2/ammonia cascade system, the high-temperature compressor, e.g. one of the ammonia compressors, should be started before the CO_2 compressors are started, to avoid the CO_2 compressors cutting out due to high pressure. Control components should coordinate the operation of the compressors on the low-temperature side and high-temperature side to ensure a smooth operation. On start-up, a suction pressure control valve will ensure that the CO_2 compressors are not overloaded.

10.9.3 Cascade injection control

The injection of refrigerant into the cascade heat exchanger should be controlled to regulate the condensation pressure in the low-temperature circuit.

It is recommended that the CO_2 gas be de-superheated before it enters the cascade heat exchanger, since the gas typically is around 60 °C (140 °F), thus heat can be rejected to the ambient air or used for heat recovery. Furthermore, de-superheating will reduce thermal stresses in the heat exchanger and mitigate high heat flux from the CO_2 gas, thus creating more stable conditions on the evaporation side.

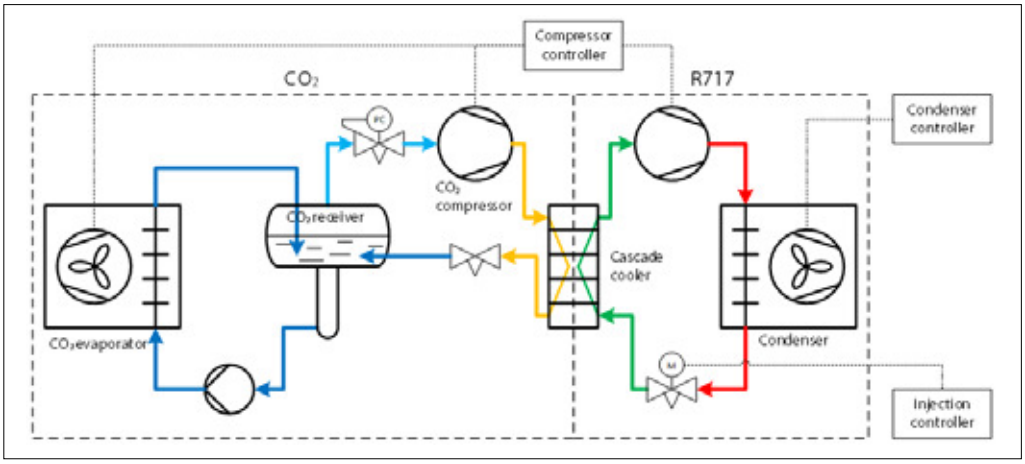

Figure 10.9.1: Principal diagram of cascade system controls

10.10 Control methods for hot gas defrosting

Experience globally shows that there are several pitfalls in hot gas defrost systems, which can lead to ineffective systems and, in a worst-case scenario, serious accidents if appropriate design and operation of the system are not followed.

10.10.1 Hot-gas defrost on pump-circulated evaporators in CO_2 systems

From an efficiency point of view, the goal is to return the highest amount of liquid condensate from the evaporator back to the liquid receiver. All liquid will be separated in the receiver and pumped out to the evaporators in cooling mode. In Figure 10.10.1 below, the hot gas defrost principle for a pumped circulated low-temperature evaporator is shown.

The valves (1) through (4) are shown in the following principle diagrams for hot-gas defrosting systems, and they represent the following: (1) is the liquid supply valve, which controls the liquid supply to the evaporator during cooling mode. (2) is the suction solenoid valve in the wet return line/suction line which is a soft-opening valve. (3) is the hot-gas supply valve which is a soft-opening valve. (4) is the liquid drain valve, which for flooded systems can be either a float valve (ICFD), or a back-pressure controlled valve (ICS+CVP).

© Danfoss | Climate Solutions | 2022.10

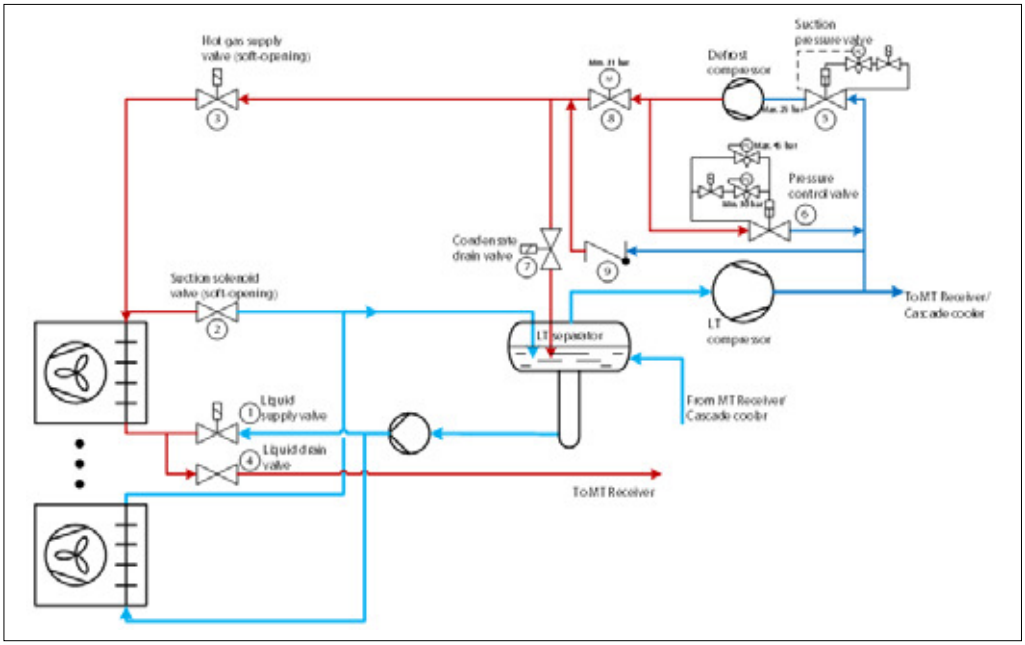

Figure 10.10.1: Hot-gas defrost principle for a low-temperature pump-circulated system with defrost compressor

As shown in Figure 10.10.1, discharge gas from the low-temperature compressor (LT) is bypassed to a defrost compressor to increase the pressure to a saturation pressure well above 0 °C (32 °F). The hot-gas pressure depends on the desired defrost sequence time. The LT compressor might only compress the CO_2 to a saturation pressure of -10 °C (14 °F) if evaporators at a medium temperature level are present in the system. A defrost compressor is therefore needed to increase the pressure to the defrost pressure level and account for the total pressure loss in the hot gas supply line, evaporator and liquid drain line.

The hot gas is supplied by the defrost compressor in Figure 10.10.1. In many cases the defrosting is done on demand from the system and must be available within a very short time. Because of this, it is not always an option to stop the defrosting compressor, and it needs to be able to run in an 'idle' mode. The pressure control valve (6) is equipped with two different pilot valve systems, either to ensure a differential pressure in 'idle' operation of the defrost compressor or to limit the maximum discharge pressure of the defrosting compressor during defrosting. A solenoid valve opens for the 'idle' pilot when no defrosting is performed, while it closes and passes control to the other pilot during defrosting.

The suction pressure valve (5) ensures a maximum suction pressure for the defrosting compressor, keeping it within its operational limits.

During defrost, where the saturation pressure in the defrost line drops, a check valve (9) installed in a bypass line from the LT compressor can feed discharge gas to the defrosting process. This gas needs no compression and, as such, is a 'free' defrosting capacity.

The motor valve (8) ensures that a drop in pressure in the defrosting system does not result in an excessively low or even negative pressure ratio for the defrosting compressor.

It is recommended that possible variations be considered for the defrost compressor's suction and discharge pressures to ensure that the compressor is always within its operational limits.

It must be noted that there is a possibility that refrigerant can condense in the hot gas pipelines, as it can be under high pressure and subjected to low temperatures. Liquid in the defrosting pipelines can form liquid 'projectiles' during the start of defrosting, being propelled through the system by large pressure differences. This can lead to failures, component and piping fractures and leakages that are potentially lethal. Liquid can be drained from the defrosting system by mounting a drain system in locations where the liquid will collect (low points in the piping). From there it can be drained back to the separator through a solenoid valve that is opened a few seconds before a defrost starts. Since expansion takes place across this valve, the valve must be suitable for that or a manual expansion valve (regulating valve) must be placed downstream of the solenoid valve. A HP float valve can also be used if available in the appropriate pressure range. In the sketch, a solenoid solution (7) is shown. It is important that the drainage is mounted in the right place. Alternatively, the hot gas supply valve (3) can be opened slowly, draining the liquid rather than creating liquid projectiles. Another possible solution is to reduce the pressure in the defrost system by keeping the condensate drain (7) open whenever defrosting is not being performed. If the pressure is at suction temperature then no condensation can occur, however the defrosting system will need to be pressurized and de-pressurized repeatedly.

The system suggested here takes care of many potential problems, however it is up to the designer to evaluate whether the various parts of the system are necessary.

The pressure levels shown in Figure 10.10.1 are just random example values and must not be used for dimensioning purposes. Proper dimensioning of defrost systems should be done by the constructor.

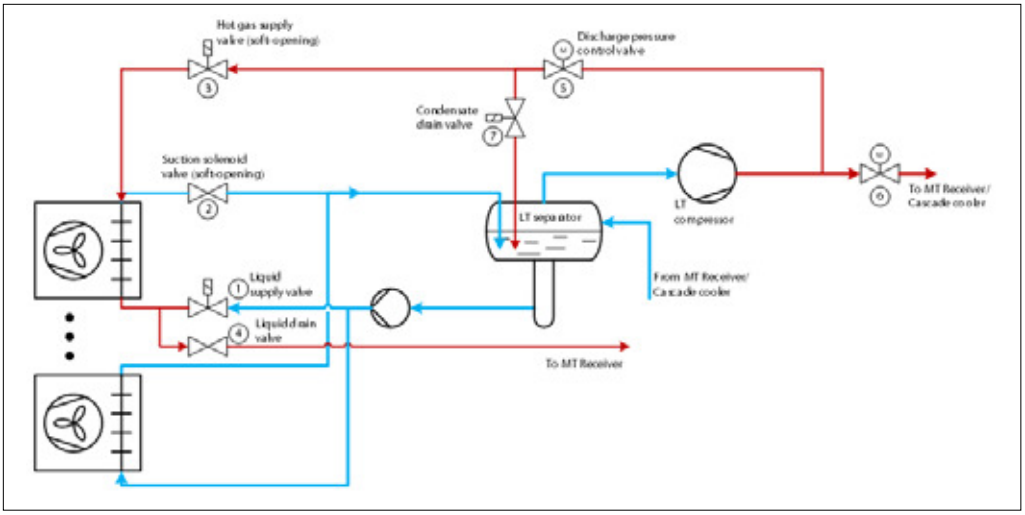

Figure 10.10.2: Hot-gas defrost principle for a low-temperature pump-circulated system without defrost compressor

Alternatively, the hot gas for the defrost sequence can be produced by one of the LT compressors as shown in Figure 10.10.2. Which solution is most feasible depends on how much time and energy is spent on defrosting the evaporators. Having a separate defrost compressor is an additional investment, but it is more energy efficient than using the LT compressors. However, the investment is saved by using the LT compressors, though one pays the penalty of inefficient use of the compressor. Generally, if it is expected to perform defrosting a large percentage of the total operation time, the separate defrosting compressor will be the most economically sound solution, while a pressure increase will be suitable for lower percentages.

The motor valve (6) closes to increase the discharge pressure of the LT compressor to a level that is suitable for defrosting (e.g. above 0 °C (32 °F)).
The motor valve (5) ensures that the pressure drop during the starting of a defrost does not lead to an excessively low discharge pressure for the LT compressor.

Liquid can be drained from the defrosting system by mounting a drain system in locations where the liquid will collect (low points in the piping). From there it can be drained back to the separator through a solenoid valve that is opened a few seconds before a defrost starts. Since expansion takes place across this valve, the valve must be suitable for that or a manual expansion valve (regulating valve) must be placed downstream of the solenoid valve.

A HP float valve can also be used if available in the appropriate pressure range. In the sketch, a solenoid solution (7) is shown. It is important that the drainage is mounted in the right place. Alternatively, the hot gas supply valve (3) can be opened slowly, draining the liquid rather than creating liquid projectiles.

10.10.2 Hot-gas defrost on DX evaporators in CO_2 systems

In principle, there is no great difference between defrosting a DX evaporator with hot gas, compared with a pump-circulated evaporator. The principles remain more or less the same as described in the defrost sequence section in chapter 5 - Evaporator controls.

If a DX system uses hot-gas defrost, the condensed liquid should be drained directly into the MT receiver by a proper liquid drain valve (4) such as ICS+CVP-H or, even better, an ICFD so that only condensed liquid will reach the receiver. A check valve must be mounted in the liquid drain line downstream of the liquid drain valve to prevent HP refrigerant from flowing back into the evaporator. To prevent flash gas from blocking the expansion valves, the liquid should not be drained directly into the liquid supply line.

© Danfoss | Climate Solutions | 2022.10

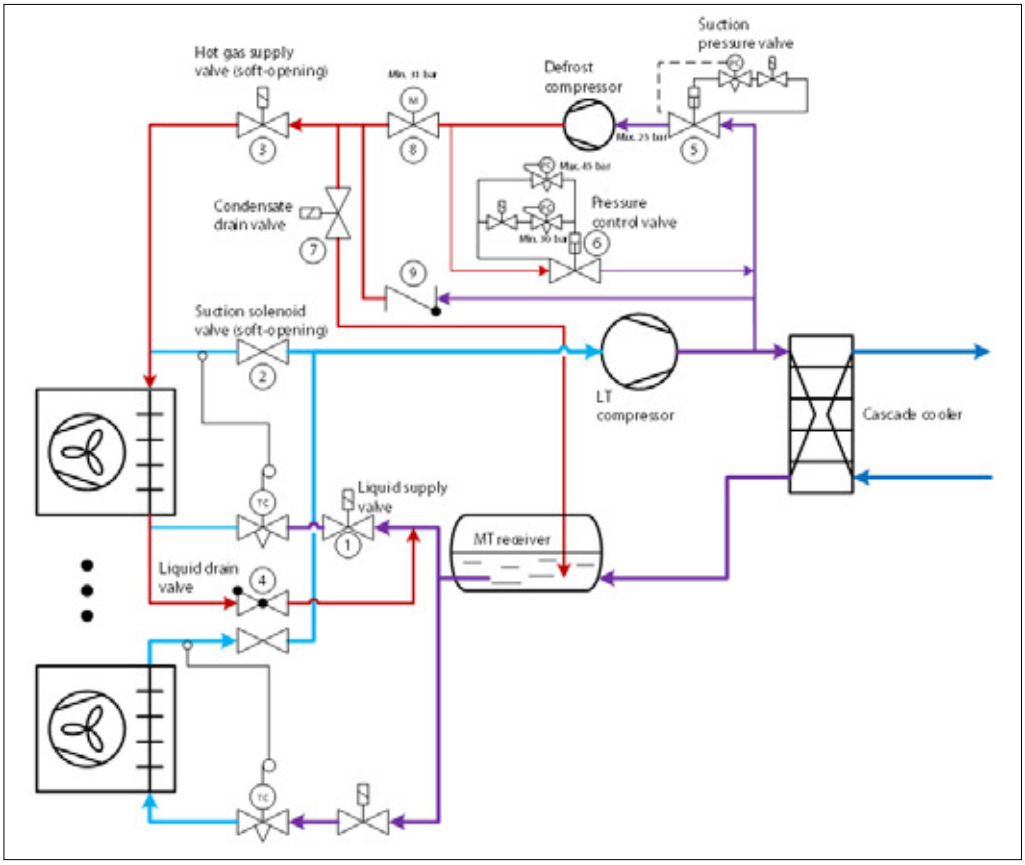

Figure 10.10.3: Hot-gas defrost principle for direct expansion system with defrost compressor

The principle diagram in Figure 10.10.3 shows the hot-gas defrost system for a direct expansion evaporator with a defrost compressor. Many of the control valves for the defrost compressor and hot-gas supply line shown are similar to the control valves shown in Figure 10.10.1. The discharge gas from the LT compressor is bypassed to the defrost compressor, which increases the pressure to the hot-gas pressure level.

The pressure control valve (6) is equipped with two different pilot valve systems, either to ensure a differential pressure in 'idle' operation of the defrost compressor or to limit the maximum discharge pressure of the defrosting compressor during defrosting. A solenoid valve opens for the 'idle' pilot when no defrosting is performed, while it closes and passes control to the other pilot during defrosting.

The suction pressure valve (5) ensures a maximum suction pressure for the defrosting compressor, keeping it within its operational limits.

During defrost, where the saturation pressure in the defrost line drops, a check valve (9) installed in a bypass line from the LT compressor can feed discharge gas to the defrosting process. This gas needs no compression and, as such, is a 'free' defrosting capacity.

The motor valve (8) ensures that a drop in pressure in the defrosting system does not result in an excessively low or even negative pressure ratio for the defrosting compressor.

It is recommended that possible variations be considered for the defrost compressor's suction and discharge pressures to ensure that the compressor is always within its operational limits.

The pressure levels shown in Figure 10.10.3 are just random example values and must not be used for dimensioning purposes. Proper dimensioning of defrost systems should be done by the constructor.

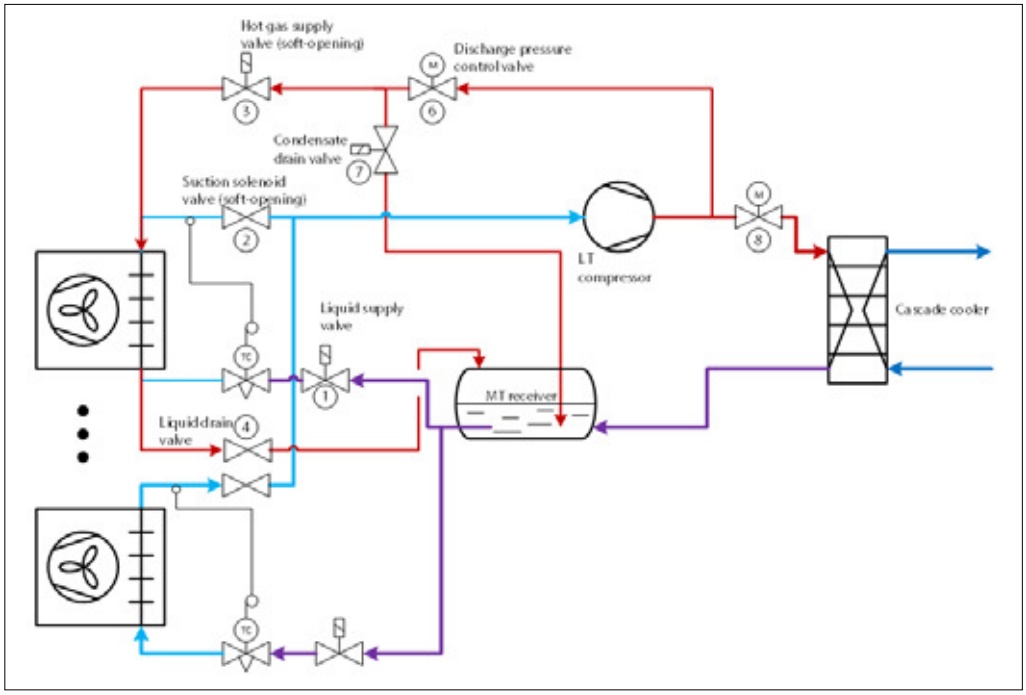

Figure 10.10.4: Hot-gas defrost principle for direct expansion system without defrost compressor

Defrosting a DX evaporator with the LT compressors is shown in Figure 10.10.4.

To increase the discharge pressure from the LT compressor, the motor valve (8) closes when a defrost sequence is started.

In case of a drop in pressure in the defrost system, the hot-gas valve (6) ensures a minimum discharge pressure of the LT compressor.

If a DX system uses hot-gas defrost, the condensed liquid should be drained directly into the MT receiver by a proper liquid drain valve (4) such as ICS+CVP-H or, even better, an ICFD so that only condensed liquid will reach the receiver. A check valve must be mounted in the liquid drain line downstream of the liquid drain valve to prevent HP refrigerant from flowing back into the evaporator. To prevent flash gas from blocking the expansion valves, the liquid should not be drained directly into the liquid supply line.

10.10.3 Hot-gas defrost pressure in CO_2 systems

The defrost cycle time can be reduced by increasing the defrost temperature. However, moisture clouds can be created in the cold room at an excessively high defrost temperature due to fast melting and heating of the frost layer on the evaporator. If moisture clouds are created, the moisture goes back into the room and not out of the defrost drain, which is not a desirable situation.

To defrost a CO_2 evaporator with hot gas, the saturated temperature in the evaporator during the defrost cycle should be sufficiently above zero degrees. A saturated temperature range in the evaporator during a defrost cycle between 7-12 °C (44.6-53.6 °F) has proven to give satisfactory results in most cases. This is equal to a saturated pressure range of 41 to 47 bar (595 to 682 psi).

Please be aware of pressure losses in pipes, components and controls between the compressor discharge and the evaporator, where typically 1 bar (14.5 psi) pressure loss equals approximately 1 °C (1.8 °F). The compressor discharge pressure during a defrost cycle must be high enough to overcome this pressure loss.

Note: using the superheat of a discharge gas with a saturated pressure below zero degrees will not give satisfactory results. For a proper defrost, the condensing energy of the hot gas should be used.

© Danfoss | Climate Solutions | 2022.10

10.11 Oil in CO_2 systems

In CO_2 systems with traditional refrigeration compressors, both miscible and immiscible oil types are used (see Table 10.2 below).

For immiscible lubricants, such as polyalphaolefin (PAO), the lubricant management system is relatively complicated. The density of PAO is lower than the density of the liquid CO_2. The lubricant therefore floats on top of the refrigerant, making it more difficult to remove than in ammonia systems. Also, to avoid fouling evaporators, compressor oil separation with non-miscible oils must be highly effective; basically, a virtually oil-free system is desirable.

With miscible lubricants, such as polyol ester (POE), the oil management system can be much simpler. POE oils have high affinity with water, so the challenge when using POE is to ensure the stability of the lubricant.

In volatile brine systems using CO_2 as a secondary refrigerant, and in recirculating systems with oil-free compressors, no oil is present in the circulated CO_2. From an efficiency point of view, this is optimum because it results in good heat transfer coefficients in the evaporators. However, it requires that all valves, controls and other components can operate dry.

Oil type	**PAO** **Poly-alpha-olefin oil** *(synthetic oil)*	**POE** **Polyol ester oil** *(ester oil)*
Solubility	Low (immiscible)	High (miscible)
Hydrolysis	Low	High affinity to water
Oil separation system	**Special requirements:** High filtration performance Multistage coalescing filters Active carbon filter	**No special requirements** (System requirements like HCFC/HFC)
Oil return system	**Special requirement:** Oil drain from low-temperature receiver (oil density lower than CO_2 - opposite of NH_3)	**Simple** (System requirements like HFC) In flooded evaporators, an oil rectifier is needed
Challenge	Oil separation and return system Long-term oil accumulation in e.g. evaporators	High affinity to water Long-term stability of oil 'Clean' refrigerant system required

Table 10.2: CO_2 and oil

The oil concentration in the pump separator increases gradually because the oil cannot be directly sucked back to the compressor with the gas. If the oil concentration in the evaporator becomes too high, the adhesive forces will make the oil 'stick' to the heat-transferring surfaces. This reduces the capacity of the plant.

By constantly boiling off part of the oil/CO_2 liquid from the pump separator, the oil concentration in the plant remains low. During the boiling process in the oil rectifier, the CO_2 liquid is sub-cooled and the oil/CO_2 liquid mixture from the CO_2 separator is boiled off and sucked back to the CO_2 compressor.

Pure CO_2 liquid must never be returned to the compressor as this will damage the compressor. It is therefore imperative that the CO_2 at the oil rectifier outlet is superheated.

The superheat can be controlled by a REG valve fitted downstream of the solenoid valve for an oil rectifier with natural circulation.

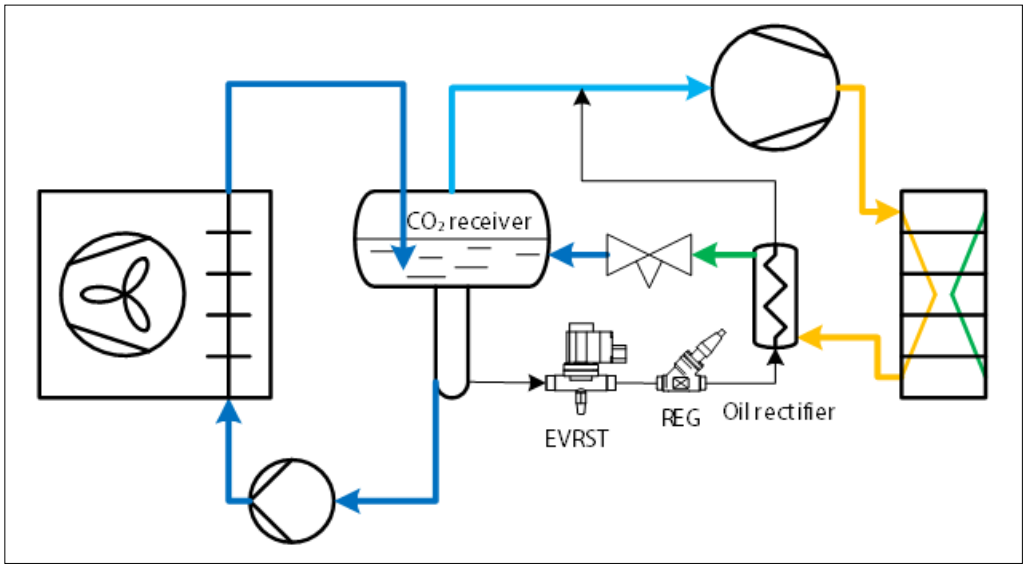

Figure 10.11.1: Oil recovery system for soluble oils driven by gravity

Figure 10.11.1 shows an oil recovery system based on natural circulation by taking a liquid/oil mixture from the bottom of the CO_2 receiver standpipe.

An alternative is to recover the liquid/oil mixture from the liquid feed line where the flow is driven by the circulation pump head as shown in Figure 10.11.2. Here the mixture is controlled by an AKVA expansion valve which is controlled by the superheat controller EKC 315A, however the AKVA could be replaced by an ICF valve with expansion valve module.

Detailed application examples for oil recovery with oil rectifiers are shown in chapter 6 (Oil Systems).

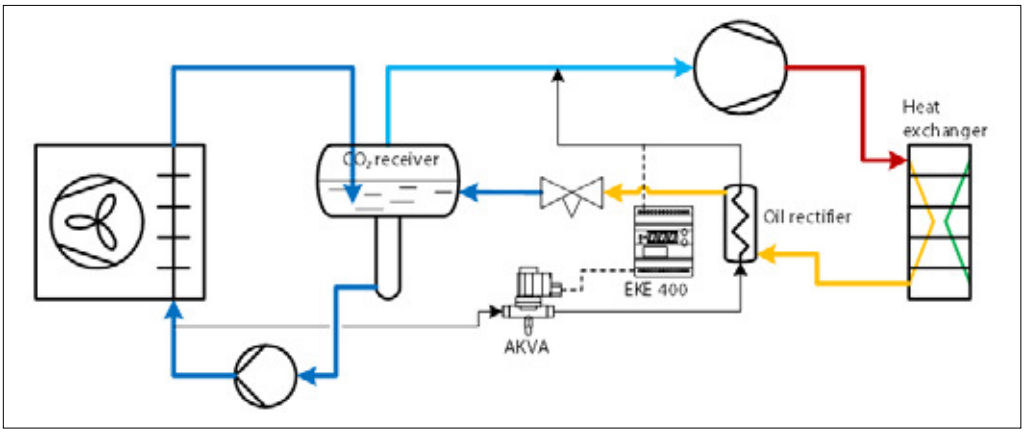

Figure 10.11.2: Oil recovery system for soluble oils driven by circulation pump head

10.11.1 Oil recovery for multi-compression systems

Most industrial applications have more than 1 evaporating temperature level and more than 1 stage of compression. The oil that is circulated in the refrigeration system will accumulate over time in the separator at the lowest temperature. An oil rectifier is used to evaporate refrigerant from the low-pressure separator and collect the oil in an oil receiver. From the oil receiver, oil can be fed to all compressors in the system through individual oil feed lines when they demand oil. To supply oil from the oil receiver to the compressors, discharge gas from the highest pressure level in the systems, e.g. from a hot gas defrost compressor, is used to increase the pressure in the oil receiver. The elevated pressure ensures that oil can be supplied to all compressors, and it prevents there being a negative pressure difference between the oil receiver and the suction pressure for each compressor.

Note that since the refrigerant for the LT separator is supplied from the MT separator, the oil will usually be transported to the LT system, which will have the highest oil content. However, if the LT load is small or it runs very infrequently, then it could be advantageous to add an oil rectifier to the MT separator as well.

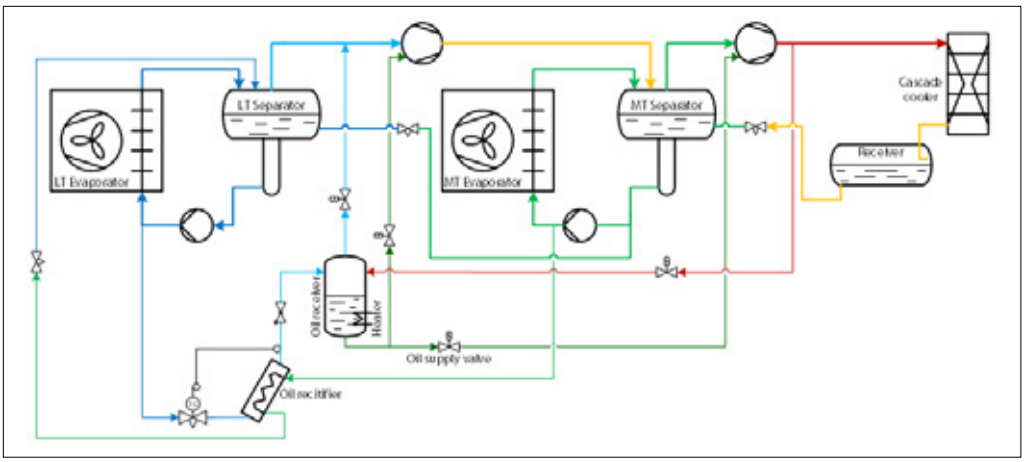

Figure 10.11.3: Oil recovery system for multiple compression stages

© Danfoss | Climate Solutions | 2022.10

10.12 Water in CO_2 Systems

In ammonia systems, the oil is changed regularly and non-condensables are purged frequently to minimize the accumulation of oil, water and solid contaminants that can cause problems.

Compared to ammonia systems, CO_2 is less sensitive, but if water is present, problems may occur. Some early CO_2 installations reported problems with control equipment, among other components. Investigations revealed that many of these problems were caused by water freezing in the system.

Modern systems use filter driers to maintain the water content in the system at an acceptable level.

The acceptable level of water in CO_2 systems is much lower than with other common refrigerants. The diagram in figure 10.12.1 shows the solubility of water in both the liquid and vapour phases of the CO_2 liquid and vapour as a function of temperature. The solubility in the liquid phase is much higher than in the vapour phase. The solubility in the vapour phase is also known as the dew point.

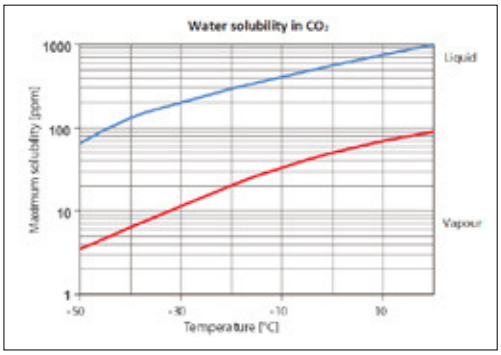

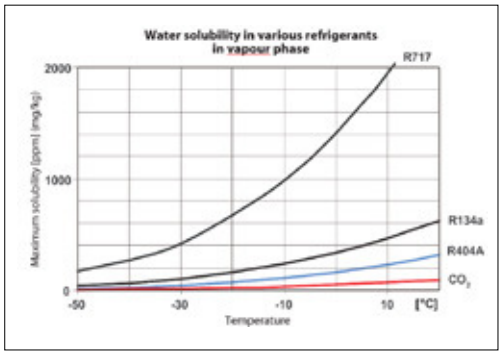

Figure 10.12.1: Water solubility in CO_2

The diagram in Figure 10.12.1 shows the maximum water solubility in ppm in CO_2 with varying temperature. The maximum solubility is about 10 times higher in liquid CO_2 than in vapour CO_2 for the temperature range shown.

Below these levels, water remains dissolved in the refrigerant and does not harm the system. Water (H2O) molecules are dissolved if the concentration is lower than the maximum solubility limit, but they precipitate out of solution into droplets if the water concentration is higher than the maximum solubility limit.
If the water is allowed to exceed this limit in a CO_2 system, problems may occur, especially if the temperature is below 0 °C (32 °F). In this case, the water will freeze, and the ice crystals can block control valves, solenoid valves, filters and other equipment. This problem is especially significant in flooded and direct expansion CO_2 systems, but less so in volatile secondary systems because less sensitive equipment is used.

10.12.1 Chemical reactions

It should be noted that the reactions described below do not occur in a well-maintained CO_2 system, where the water content is below the maximum solubility limit.

In a closed system such as a refrigeration system, CO_2 can react with oil, oxygen, and water, especially at elevated temperatures and pressures. For example, if the water content is allowed to rise above the maximum solubility limit, CO_2 can form carbonic acid, as follows (ref. (4) and (5)):

$$\mathbf{CO_2 + H_2O \rightarrow H_2CO_3}$$

(CO_2 + water → carbonic acid)
In CO_2 production systems, where water concentrations can rise to high levels, it is well known that carbonic acid can be quite corrosive to several kinds of metals, but this reaction does not take place in a well-maintained CO_2 system, because the water content in the system is kept below the maximum solubility limit.

10.12.2 Water in vapour phase

If the water concentration is relatively high, CO_2 and water in the vapour phase can react to form a CO_2 gas hydrate:

$$\mathbf{CO_2 + 8 \cdot H_2O \rightarrow CO_2(H_2O)_8}$$

(CO_2 + water → hydrated CO_2)

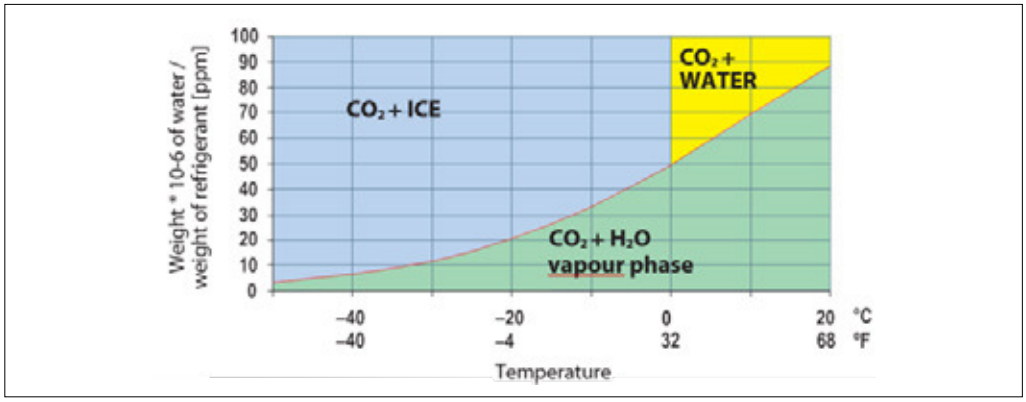

Figure 10.12.2: Water solubility in vapour CO_2

The CO_2 gas hydrate is a large molecule and can exist above 0 °C (32 °F). It can create problems in control equipment and filters, similar to the problems caused by ice.

10.12.3 POE lubricant

Generally, esters such as POE react with water as follows:

$$\mathbf{RCOOR' + H_2O \rightarrow R'OH + RCOOH}$$

(ester + water → alcohol + organic acid)

As shown, if water is present POE will react with water to form alcohol and an organic acid (carboxylic acid), which is relatively strong and may corrode the metals in the system. It is therefore essential to limit the water concentration in CO_2 systems if POE lubricants are used.

10.12.4 PAO lubricant

$$\mathbf{2 \cdot RCH_3 + 3 \cdot O_2 \rightarrow 2 \cdot H_2O + 2 \cdot RCOOH}$$

(oil + oxygen → water + acid)

PAO lubricant is also called synthetic oil. Ordinarily, PAO is very stable. However, if sufficient free oxygen is present, as might be available from corrosion in pipes, the oxygen will react with the lubricant to form carboxylic acid.

10.12.5 Removing water

Controlling the water content in a refrigeration system is a very effective way of preventing the above-mentioned chemical reactions.
In Freon systems, filter driers are commonly used to remove water, usually the type with a zeolite core. The zeolite has extremely small pores, and acts like a molecular sieve. Water molecules are small enough to pass through the sieve and, being very polar, are adsorbed on the zeolite molecules. R134a molecules are too large to penetrate the sieve. When the replaceable core is removed, the water goes with it.

© Danfoss | Climate Solutions | 2022.10

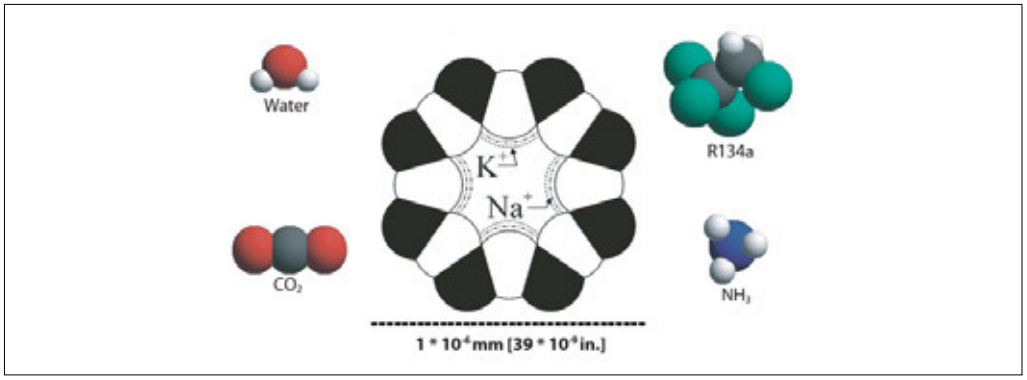

Figure 10.12.3: Refrigerants molecules and Molecular Sieves

CO_2 is a non-polar molecule, so the removal process is different. Like water molecules, CO_2 molecules are small enough to pass through the molecular sieve. However, the water molecules adsorbed on the molecular sieve tend to displace the CO_2 molecules, due to the difference in polarity. Zeolite filter driers cannot be used in ammonia systems, because both water and ammonia are very polar. Even though the driers function differently in this respect in CO_2 systems, the efficiency is good. The water retention capacity is approximately the same as in R134a systems.

The most effective location for detecting and removing water is where the concentration is high. The solubility of water in CO_2 is much lower in the vapour phase than in the liquid phase, so more water can be transported in liquid lines.

The relative humidity is highest in the wet return line since vapour CO_2 has a lower solubility of water than liquid CO_2. However, the relative humidity in the wet return line depends on the circulating rate. In a DX system, the variation of the relative humidity differs, but also in this case the highest concentration is in the suction line.

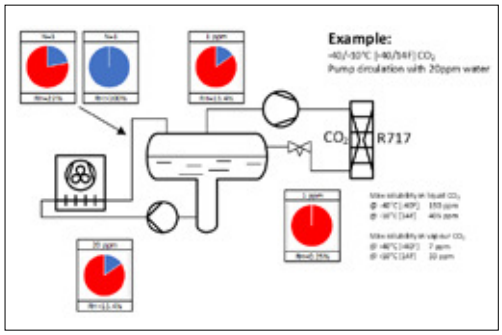

Figure 10.12.4: Humidity Distribution in flooded systems

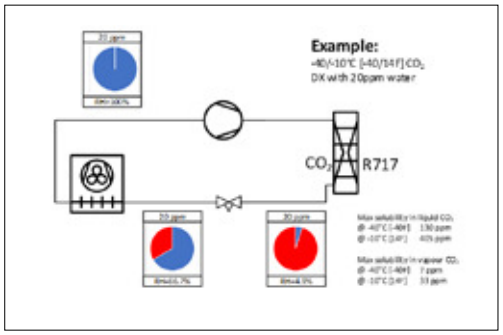

Figure 10.12.5: Humidity Distribution in DX systems

Taking advantage of this principle, moisture indicators and filter driers are typically installed in a liquid line or liquid bypass line from the pump separator (see chapter 9 for filter driers in CO_2 systems).

10.12.6 How does water enter a CO_2 system?

Unlike some ammonia systems, the pressure in CO_2 systems is always above atmospheric. However, water can still find its way into CO_2 systems.

Water may contaminate a CO_2 system through five different mechanisms:

- Diffusion
- Maintenance and repair activities
- Incomplete water removal during installation/ commissioning
- Water-contaminated lubricant charged into the system
- Water-contaminated CO_2 charged into the system

Obviously, all of these mechanisms should be avoided or minimized.

To illustrate a scenario in which water may contaminate a system, think of a person who, believing CO_2 is a very safe refrigerant, thinks that it may be handled without following the normal ammonia safety requirements. He might open the system to perform a repair. Once the system is opened, air enters, and the moisture in the air condenses inside the piping. If the person does not evacuate the system very thoroughly, some water may be left in the system.

In another scenario, the person forgets that the lubricant used in the system, POE, has a high affinity for water, and leaves the cap off the container. After the POE is charged into the system, the water may start to cause problems in the system.

11. Transcritical CO_2 systems

All substances have a triple point and a critical point. The triple point is the condition at which a substance can co-exist in all three phases – solid, liquid and vapour – in equilibrium. Liquid cannot exist at temperatures below the triple point. The triple point therefore sets a lower bound for the temperature range in which a vapour compression refrigeration cycle can be used. The critical point is the point at which evaporation and condensation no longer occur. For most refrigerants, the critical print is relatively high, so heat rejection can take place below that point. A principle of the process is shown in Figure 11.1. The refrigerant rejects its heat in 3 steps: De-superheating, where the sensible heat is cooled down. Condensing, where the refrigerants changes from gas into liquid. Subcooling, where the liquid refrigerant is subcooled.

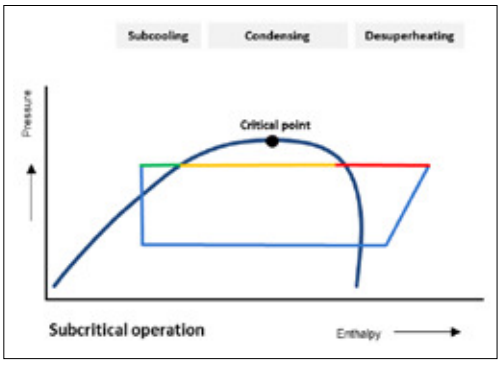

Figure 11.1: Principle of a condensing process in a log(p)-h diagram

This happens at constant pressure in a condenser. At temperatures and pressures above the critical point, no clear distinction can be made between what is liquid and what is vapour. The critical point thus sets an upper limit on heat transfer based on evaporation and condensation. CO_2 has a triple point at -56,6 °C and 5.2 bar (-69.9 °F and 75.4 psi) and a critical point at 31.1 °C and 73.8 bar (88 °F and 1070 psi). Most refrigerants are used for operation in the range between their triple point and their critical point. However, with a critical temperature at 31.1 °C (88 °F), using CO_2 in subcritical systems (below the critical point) could pose problems for condensation in geographical areas with ambient temperatures above 25 °C (77 °F). In table 11.1, the critical pressure and temperate are shown for some popular refrigerants.

Critical pressure and temperature		
	P crit / bar (psi)	T crit / °C (F)
R134a	40.6 (588.7)	101.1 (213.98)
R404A	37.3 (540.85)	72 (161.6)
R717	113.3 (1642.85)	132.3 (270.14)
R744	73.8 (1070.1)	31.1 (87.98)

Table 11.1: Critical pressure and temperature for different refrigerants

11.1 Explanation of the transcritical cycle

To overcome this problem, CO_2 can be compressed to a pressure level above the critical pressure, thus the CO_2 can reject heat at a temperature above 31.1 °C. When compressing CO_2 beyond the critical point, the refrigeration process is called 'transcritical'. Above the critical point, there is no defined phase change, which also means that when rejecting heat above the critical point, the constant condensing temperature no longer exists. With decreasing enthalpy, the CO_2 temperature is cooled down at a constant pressure. A gas cooler is used for rejecting the heat, and the control is different compared with condensers. An example of this process is show in Figure 11.2. Figure 11.3 shows a two-stage refrigeration cycle for CO_2. The sub-critical cycle rejects heat by means of condensing, the transcritical cycle by means of gas cooling.

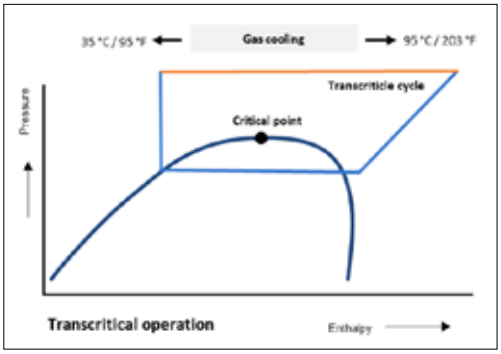

Figure 11.2: CO_2 in transcritical cycle

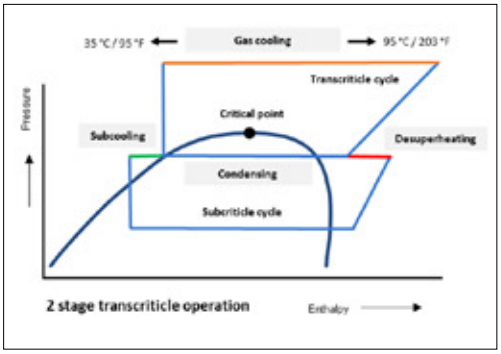

Figure 11.3: CO_2 in a 2-stage transcritical operation

© Danfoss | Climate Solutions | 2022.10

11.1.1 Heat rejection

As explained, at temperatures higher than the critical point, CO_2 is in a transcritical phase, unable to condense. The gas can only be cooled down and will not change phase. Consequently, pressure and temperature are no longer interdependent during the heat rejection process. The heat capacity of CO_2 also changes when CO_2 is cooled. This makes gas coolers different from both water-to-refrigerant heat exchangers, where the heat capacity is constant, and condensers, where the heat capacity in the gas phase is relatively low and very high when gas starts to condense (Figure 11.4).

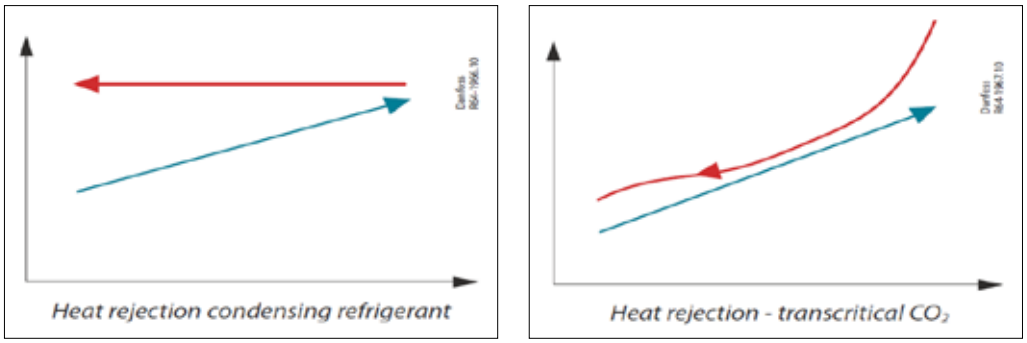

Figure 11.4: Heat rejection process of CO_2 in sub-critical (condensing) and transcritical (gas cooling) state

Gas coolers are used for rejecting heat when operating a transcritical CO2 system, since phase changes of CO2 above the critical point are not possible and do not occur or behave the same way as condensation does in a subcritical cycle.

In contrast to condensers, the refrigerant temperature is not constant in the gas cooler. It is therefore important to design a gas cooler with minimal thermal contact between gas cooler sections on the refrigerant side, in order to avoid heating the cooled CO_2 refrigerant at the gas cooler outlet.

11.1.2 Design of gas coolers

A CO_2 gas cooler must be able to handle pressures that are a lot higher than pressures seen in a normal condenser with phase change, thus it needs to be more robust. The heat transfer in a CO_2 gas cooler also differs from a condenser. Where heat is rejected at a constant temperature in a condenser, the temperature and thermodynamic properties change a lot in a gas cooler on the refrigerant side. This means that the part of the gas cooler where the CO_2 enters the gas cooler has a higher temperature than any other part, while the lowest temperature occurs at the exit. If the gas cooler is not constructed properly, heat could flow from the hot end of the refrigerant circuit to the cold end, which would significantly reduce the efficiency of the gas cooler. To reduce this heat flow as much as possible, the thermal contact between the gas cooler sections must be minimized.

The complete heat exchange between the gas cooler and the air must be counter-current flow or cross-counter-current. The last tubes with the refrigerant before leaving the gas cooler should be located where the coldest air enters. The gas cooler outlet temperature of the CO_2 must be as low as possible.

11.1.3 The effect of gas cooler control on system efficiency

Transcritical operation

Figure 11.5 shows a transcritical cycle with three different gas cooler pressures and a constant gas cooler outlet temperature for all three pressures. The figure shows an ideal gas cooler pressure, one that is too high (index H) and one that is too low (index L). If the pressure is too high, the compressor has a higher energy demand (Δh_comp), while the evaporators gain little specific enthalpy difference (Δh_evap). If the pressure is too low, the compressor saves energy, but the specific enthalpy difference of the evaporator is reduced. For each condition, the optimal pressure (3) can be found and a curve has been developed that expresses the optimum pressure as a function of the gas cooler outlet temperature (Tgco), expressing the best possible COP for a given temperature. This curve, in effect, replaces the saturation curve and, to simplify the operation, the curve has been extended into the subcritical area where it essentially expresses the condensing temperature minus a small subcooling, as explained further.

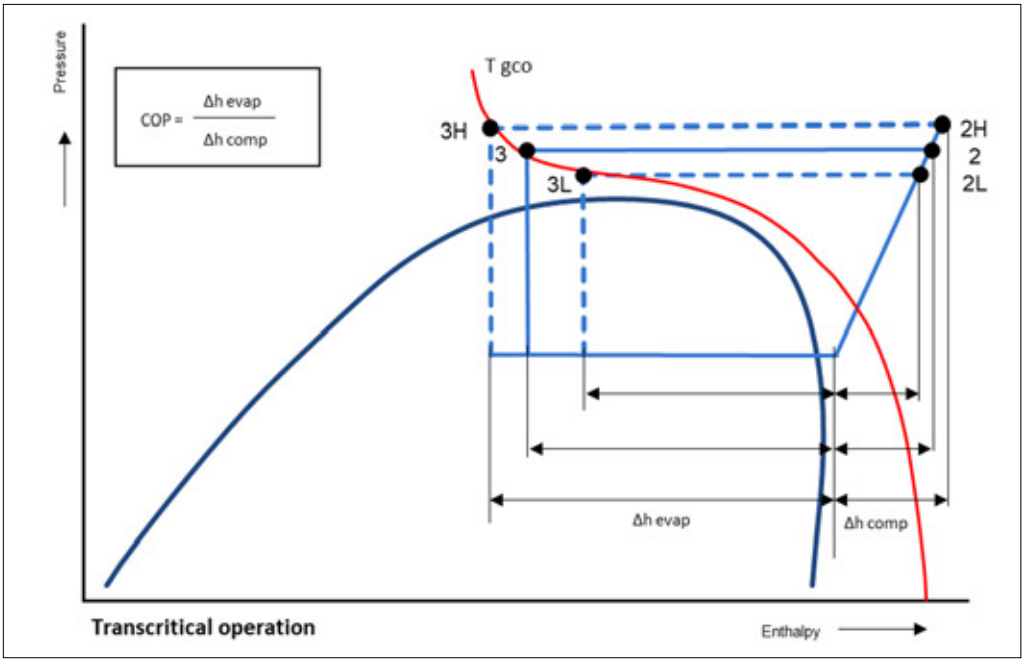

Figure 11.5: Ideal gas cooler pressure in transcritical operation

Subcritical operation

The gas cooler pressure is controlled based on the gas cooler outlet temperature, regardless of whether it is in subcritical or transcritical operation. In subcritical conditions, the system is controlled as a conventional refrigeration system where the subcooling is the control parameter. See Figure 11.6. Subcooling is the temperature difference between ambient temperature and gas cooler outlet temperature. The gas cooler outlet temperature (Tgco) is measured and compared with the ambient temperature. If the gas cooler outlet temperature is too close to the ambient temperature, and the subcooling too low, the condensing pressure will be raised to create sufficient subcooling. If the gas cooler outlet temperature is too low (and the subcooling too high) compared with the ambient temperature, the gas cooler pressure will be reduced. At temperatures approaching the critical point, the gas cooler needs to be controlled in a different way, as it is approaching transcritical operation.

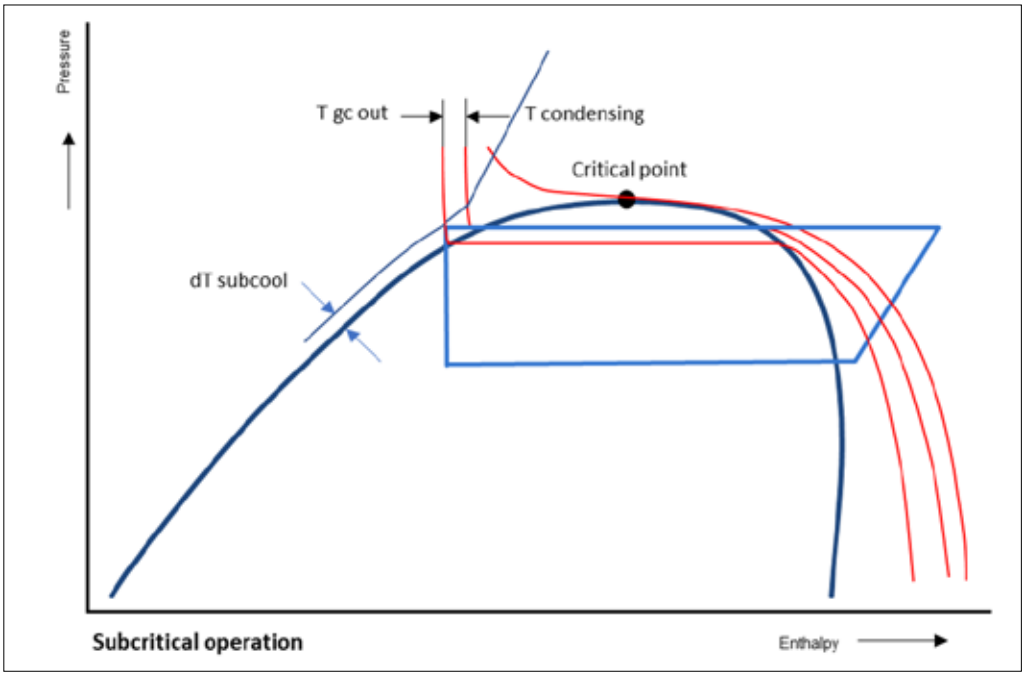

Figure 11.6: Gas cooler control in subcritical operation

© Danfoss | Climate Solutions | 2022.10

11.2 Typical CO_2 transcritical system types

Modern CO_2 transcritical systems have been developed since 2005. The systems were initially seen in Food Retail applications where they could support the growing demand for the use of natural refrigerants. The systems gained in popularity and developed successfully. These days, the systems are also used in larger commercial refrigeration systems. Typically, the liquid is injected into the evaporators by means of direct expansion control with electronic expansion valves. So they are often DX-operated systems.

The most popular commercial CO_2 system types are so-called booster systems. In principle, these are 2-stage systems, combined into one system as we often see in NH_3 systems. The benefit of a CO_2 booster system is that the huge pressure ratio is divided into 2 steps. By doing so, 1 stage takes care of the cooling demand in low evaporating temperatures (LT) and the 2nd stage takes care of the heat rejection of the LT compressors and/or the cooling demand in medium evaporating temperatures (MT).

Particularly when LT cooling demand is needed, a booster system is unavoidable because of the unavailability of compressors with such a high pressure ratio. In addition, a booster system helps to increase system efficiency and reduce the discharge temperature. The low temperature stage (1st stage) often serves freezing applications, whereas the 2nd stage serves medium-temperature applications. Booster systems with more temperature levels are also possible, but rarely seen in commercial systems.

11.2.1 Commercial booster system

The booster system is the most common CO_2 transcritical system. It is mainly used in colder climates and on smaller systems in warm climates. The system is the simplest system that can accommodate two suction temperatures and multiple evaporators. It is characterized by one compressor group for MT and one for LT, a high-pressure valve and a gas bypass valve and, finally, direct expansion (DX) liquid injection into the evaporator. See a principle drawing in Figure 11.7.

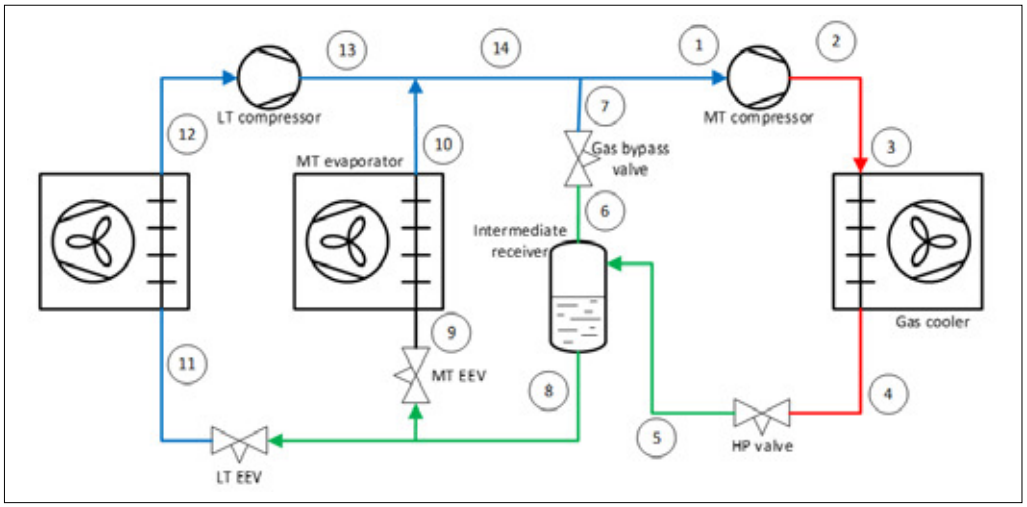

Figure 11.7: Principle drawing of a commercial CO_2 transcritical booster system

The liquid injection of both the LT and MT evaporators is maintained with superheat-controlled electronic expansion valves (LT and MT EEV). Typically, the superheat is 6 K -10 K (10.8-18 °F) depending on the combination of evaporator design and injection control. Often higher superheat is seen on CO_2 systems compared to conventional systems. A special control algorithm evaporators is used to control the evaporators to the minimum superheat. Typically for commercial systems, the evaporation temperature for MT is from -10 °C to -6 °C (14 to 21.2 °F) , and on LT the evaporation temperature often ranges from -35 °C to -30 °C (-31 to -22 °F). The gas from the LT evaporators (12) is compressed in the LT compressor (13) and is mixed with the gas from the MT evaporators (10) and the gas from the gas bypass (7). This mixture enters the MT compressor (1), where it is compressed (2), enters the gas cooler (3) and is cooled down. The gas outlet temperature (4) is controlled by means of the gas cooler controller. The high-pressure (HP) valve expands the CO_2 into a gas/liquid mixture (5), which is injected into the intermediate receiver. Here the mixture is separated into liquid (8) and vapour (6). The intermediate pressure is kept slightly higher than the MT evaporator pressure in order to create sufficient pressure for the expansion valves. The liquid (8) expands in both the LT and MT expansion valves, both into (9), the MT evaporator, and into (11), the LT evaporator. This closes the cycle. Oil transport in the system is relatively simple since the typically miscible oils are used in these systems, and the DX operation ensures that oil does not accumulate. The oil is transferred back to the suction lines of the compressors using the gas flow. Oil transfer with CO_2 is easier than with conventional refrigerants due to the high density of the gas and good miscibility of the oil and liquid. The booster system is simple and has been used in supermarkets on a larger scale since 2007. It also has the largest installation bases of all transcritical systems. The pros of the booster system are simplicity and good

scalability (from small to large systems). The cons are that in warm ambient temperatures, the energy consumption is too high compared to conventional systems. The high energy consumption can be addressed using some of the other system designs on the market.

11.2.2 Commercial booster system with parallel compression

In order to make the system more efficient, it is better to have a dedicated compressor taking care of the flash gas from the intermediate receiver pressure. This compressor is installed in a bypass line from the intermediate receiver, parallel to the MT compressors, and that is why these systems are called parallel compression booster systems. The parallel compressor compresses some of the gas from the intermediate receiver (6), while the rest of the gas is expanded (7) if necessary and fed to the suction line of the MT compressor (1). An example of such a system is shown in Figure 11.8.

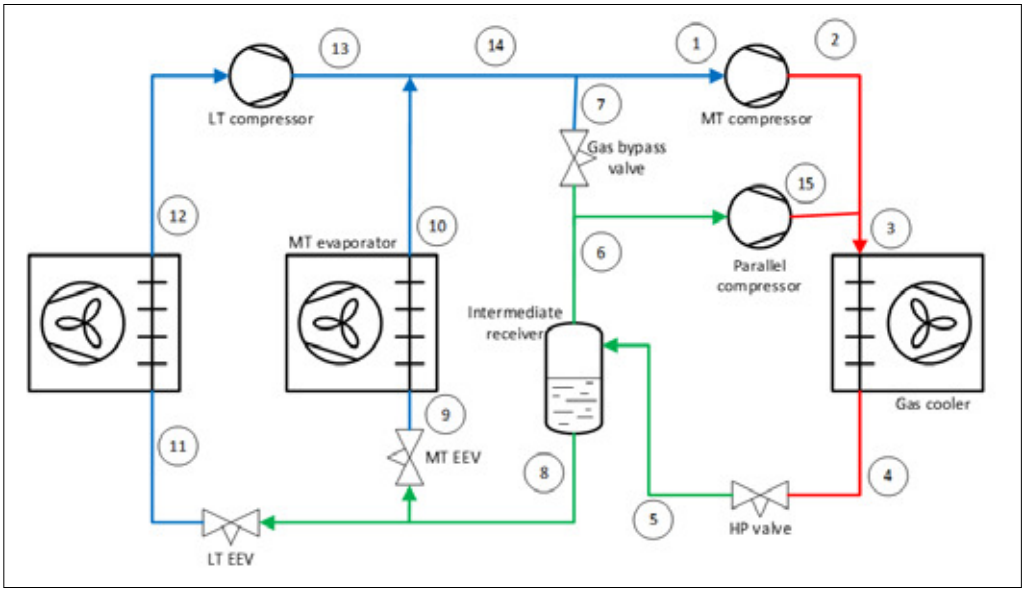

Figure 11.8: Principle diagram of a commercial parallel compression booster system

Recompressing gas from a higher pressure level saves some work from the MT compressor, and improves the system efficiency compared to compressing everything from the MT pressure level as is done in a booster system configuration. The benefit of parallel compressions is especially seen in warmer climates, where the outlet temperature of the gas cooler will be high. A high outlet temperature of the gas cooler will result in a high amount of gas in the intermediate receiver when the cooled high-pressure fluid is expanded. The corresponding log(p)-h diagram is shown in Figure 11.9.

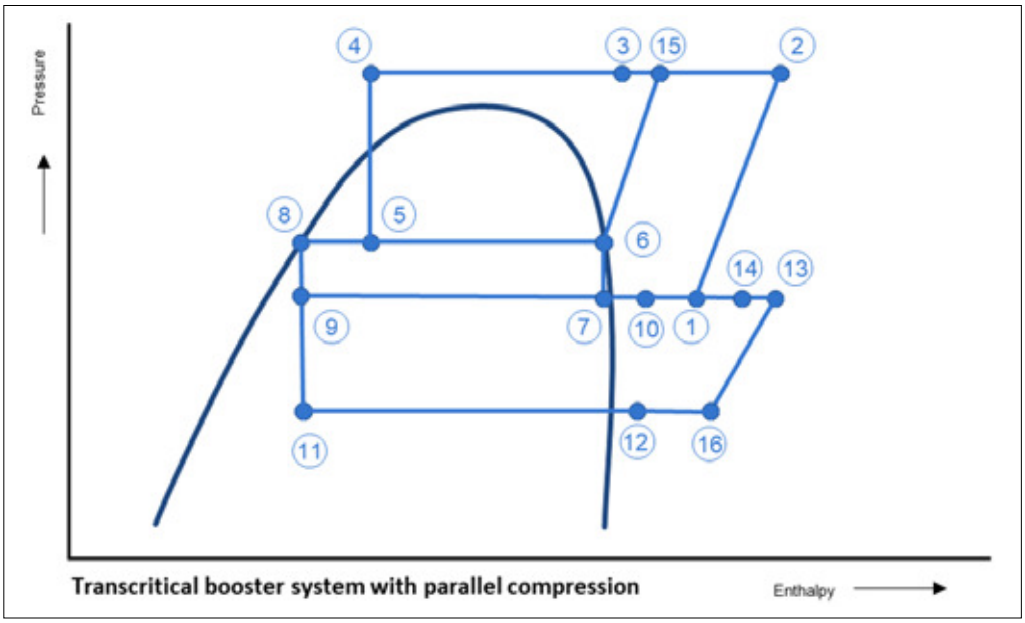

Figure 11.9: log(p)-h diagram for a parallel compression booster system

© Danfoss | Climate Solutions | 2022.10

In colder periods, the system works as a booster system, but in warmer periods the amount of flash gas (5) from the HP expansion valve increases and the parallel compressors take more intermediate pressure flash gas (6). The gas bypass valve closes. Because of the higher suction pressure of the parallel compressors, the efficiency of the system is better compared with a standard booster system.

Considerations

There are some things that need to be considered when designing a system with parallel compression.

With higher suction pressure for the parallel compressors, the oil carryover of the compressor increases. That in itself is not necessarily a problem, but it can be a challenge for the oil management system, because all the oil consumed by the parallel compressors must be fed back because there is no oil in the suction gas. If the oil amount in the system is too great, the LT compressors can also be flooded because they receive more oil than can be discharged with the gas. Very often, only one parallel compressor is on the system, and if this is sized for maximum load then it will often be too big to have a good part load. The consequence of using an oversized parallel compressor is running periods that are too short, and thus many unnecessary start-stop cycles. On the energy usage side, this configuration offers a very limited saving since it only runs in periods with high ambient temperatures and high load. Very often a better system is achieved if the parallel compressor is sized to run at low temperatures and in part load. The consequence is that the parallel compressor will then be undersized in warm periods with high load, but the system will compensate partly by increasing the receiver pressure and bleeding the remaining gas through the gas bypass valve. This very often results in better total energy consumption because the parallel compressor has more hours of operation.

11.2.3 The effect of intermediate pressure control on system efficiency

Depending on the system, the intermediate receiver pressure can either be set to a certain pressure or constantly adjusted. An adjusted intermediate receiver pressure can lead to energy savings compared to a fixed pressure.

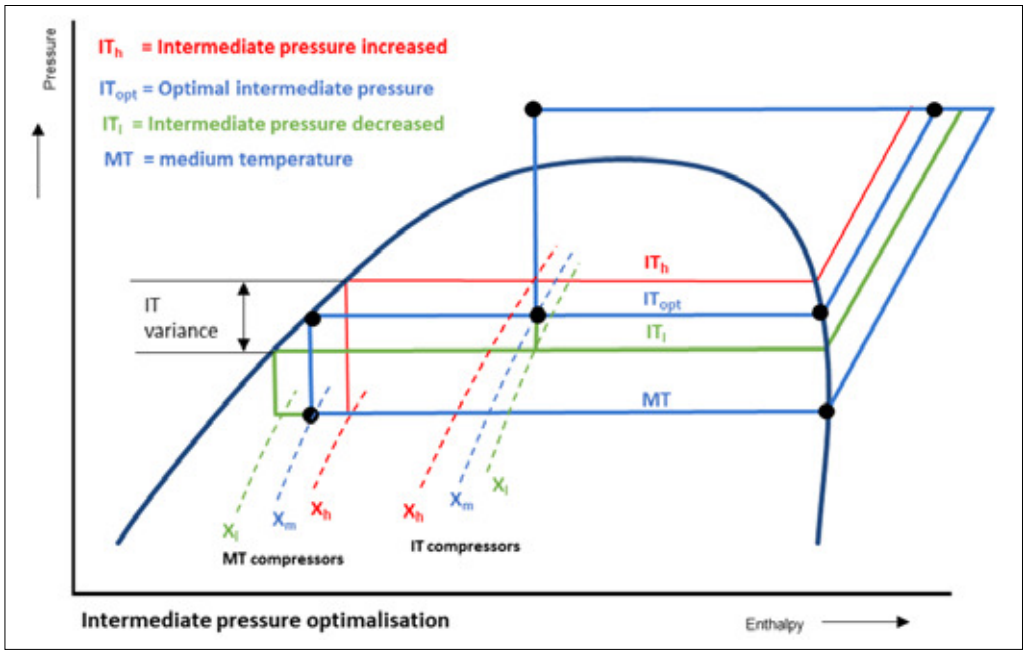

Figure 11.10: Optimal intermediate receiver pressure

In Figure 11.10, the blue cycle represents a traditional parallel compression cycle with optimal receiver pressure for this specific gas cooler outlet condition. The medium temperature is shown as MT, the intermediate temperature cycle is marked with ITopt, the optimal intermedium pressure.

If the receiver pressure is raised, represented by the red line (index h), the intermediate saturated temperature (ITh) also rises. The amount of flash gas (Xh) for the IT compressors reduces from Xm to Xh. This means that the intermediate compressors are supplied with less flash gas, at a higher pressure level. The power consumption therefore reduces. On the other hand, the MT evaporators get more flash gas, at a lower pressure and the MT compressors need to produce a higher mass flow to meet the cooling demand. A higher mass flow and a lower pressure result in a higher power consumption.

The reduction of the receiver pressure, represented by the green line (index L) also leads to a higher power demand. The intermediate compressor receives more flash gas (Xl) at a lower pressure, which leads to a higher power consumption for the compression. The MT compressor receives less flash gas and its power consumption is reduced.

11.2.4 Continuous developments for commercial CO_2 transcritical systems

CO_2 transcritical systems work by default with high pressures but also with high pressure differences. For this reason, these systems are very suitable for work with ejectors. Ejectors are a well-known technology that have been used for more than 100 years in different applications. Ejectors transform the available expansion energy delivered from the motive flow into a driving force (entrainment flow). This driving force can be used in many ways to make the systems more efficient. Danfoss has developed several ejector solutions, each with specific benefits and functionality in the system. Ejectors' efficiency depends not just on the design, but also on a system's layout, control algorithm, ambient conditions and maintenance practices. Danfoss has developed 3 different ejectors, each for a specific application and resulting in a specific benefit. See examples in Figure 11.11.

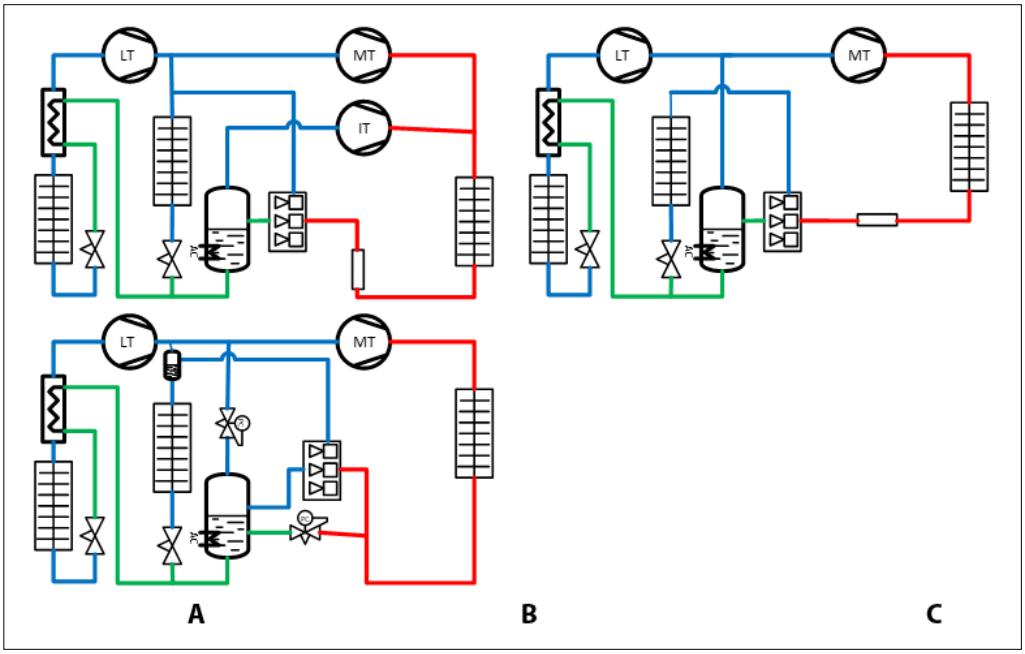

Figure 11.11 A: High-pressure (HP) ejector, B: low-pressure (LP) ejector and C: liquid (LE) ejector

In all three cycles, the ejector is placed in the same location; motive flow from the gas cooler, suction flow from the MT evaporator and outlet flow to the receiver. The control is different. The Danfoss HP ejector (system A) is designed and controlled to deliver a high-pressure lift and a relatively low suction gas flow. The Danfoss LP ejector (system B) is designed and controlled to deliver a relatively high suction gas flow at a low-pressure lift. The Danfoss LE ejector (system C) is designed to deliver a low liquid suction flow at a high-pressure lift. Whatever is entrained is a benefit. If nothing is entrained, the ejector works as an expansion valve. Danfoss has a full range of CO_2 transcritical rack controllers and valves to support these developments. Typical features on these controllers are:

- Capacity control
- Booster control
- Gas cooler control
- Heat recovery
- Intermediate pressure optimization
- Oil management
- Ejector control

© Danfoss | Climate Solutions | 2022.10

11.3 CO_2 in Industrial refrigeration

NH_3 is a natural refrigerant and is generally still considered the logical, obvious choice for large industrial refrigeration systems. This is mainly due to its excellent thermodynamic properties, it being environmentally friendly (ODP and GWP = 0) and for being widely available. This industrial refrigeration industry developed safety- and design standards, excelled in innovative system design and continuously safeguarded maintenance protocols to use this toxic and flammable refrigerant successfully and safely. Of course, NH_3 charge reduction is a constant goal in order to mitigate risks. There are several system solutions for doing this, but we focus in this chapter on NH_3/CO_2 cascade systems, but also on CO_2 transcritical systems.

11.3.1 NH_3 pump-circulated refrigeration principle

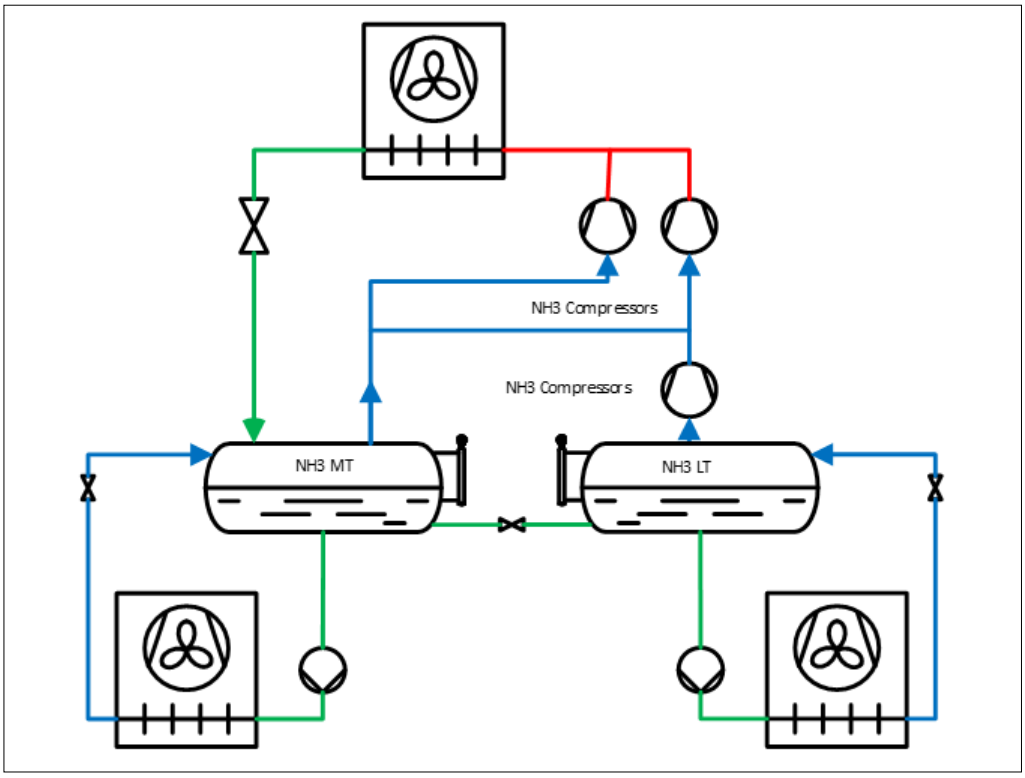

Figure 11.12: Typical 2-stage NH_3 pump circulation system

A typical industrial NH_3 system has two or more stages of evaporation at different temperature levels. Additionally, the evaporators are flooded, meaning that an overfeed of NH_3 is injected into the evaporators.

The benefit of this is an efficient use of the evaporator surface because there is no superheat. It is relatively easy to control and eliminates the risk of liquid slugging of the compressors, because the liquid and gas mixture is separated in a separator.

Only saturated vapour will pass to the compressor suction, whilst only liquid is fed by the refrigerant pumps. For 2-stage systems, the typical evaporation temperature levels are: medium temperature (MT) in the range -20 °C to -5 °C (-4 to 23 °F) – typically used for cooling applications as cold stores and packing areas, and low temperature (LT) in the range -45 °C to -25 °C (-49 to -13 °F) for cold storage, plate freezers and blast freezers.

11.3.2 NH_3/CO_2 pump-circulated refrigeration principle

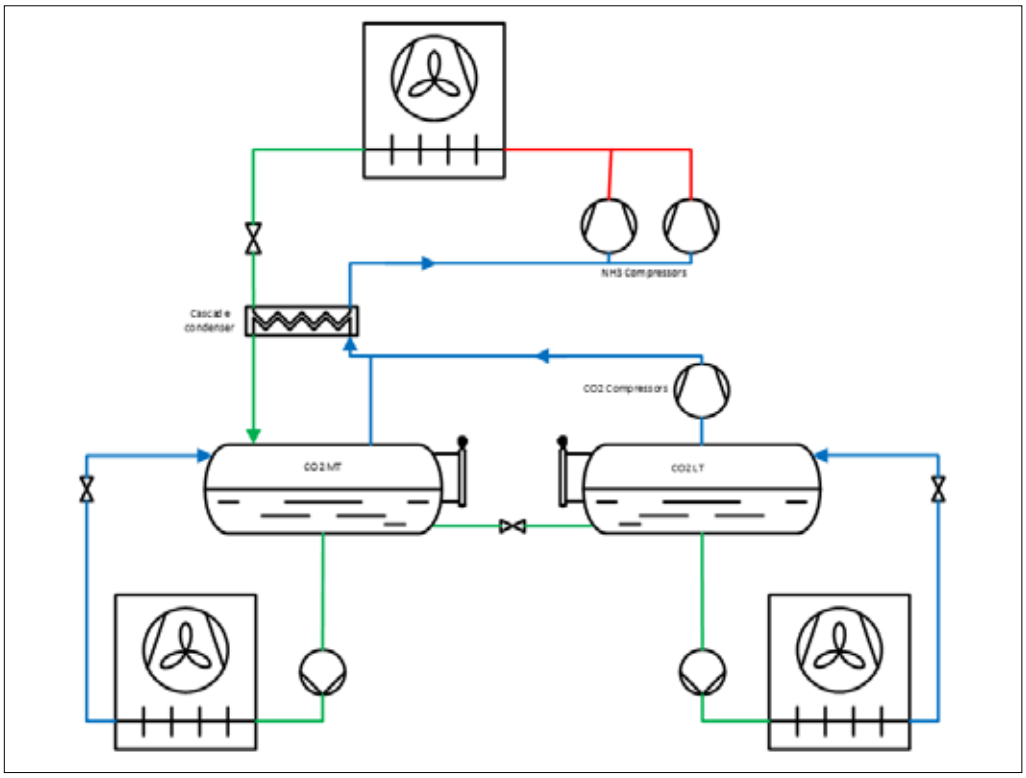

Figure 11.13: Typical NH_3/CO_2 pump circulation system

In the principle diagram in Figure 11.13, the pump-circulating NH_3 part is replaced by CO_2 as a refrigerant. The CO_2 remains in the subcritical state and is condensed in a cascade cooler, which is cooled down by an NH_3 refrigeration system.

The cascade cooler is a physical split between the NH_3 and CO_2 system. And since heat transfer needs a temperature difference, there will be a slight energy efficiency loss in this system compared with the NH_3 system in Figure 11.12. However, the NH_3 charge can be reduced by up to 80-90% depending on, of course, the physical size of the pump-circulated system.

Depending on the evaporation temperature of the CO_2, it can be more beneficial to have compression in both cycles. If the evaporation temperature is low, e.g. below -25 °C (-13 °F), there is a benefit to having compression in the CO_2 cycle, since CO_2 compressors are more efficient than ammonia compressors at these temperature levels. CO_2 can successfully be used down to evaporating temperatures of -54 °C (-65.2 °F). This is close to the triple point, so control measures must be taken to avoid going lower than this point.

11.3.3 Industrial CO_2 TC pump-circulated refrigeration principle

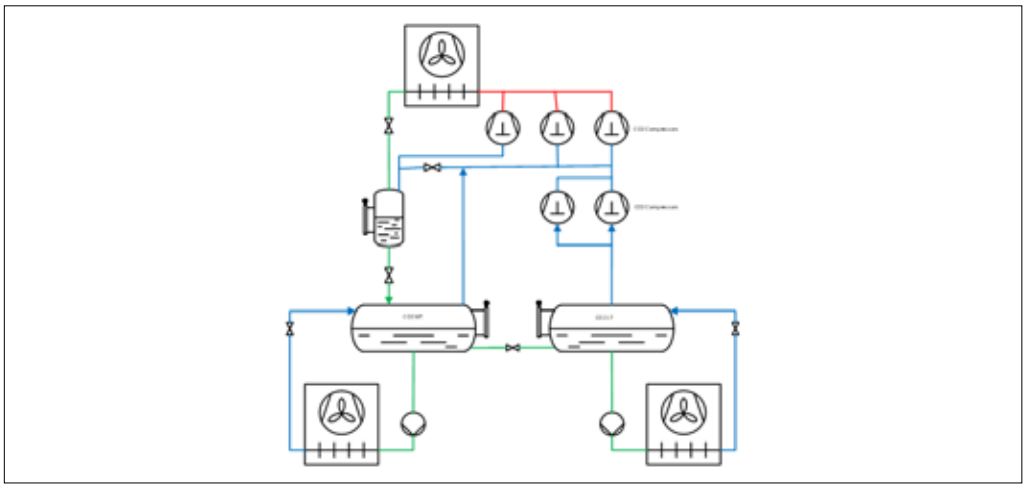

Figure 11.14: Principle of TC CO_2 pump circulation system

© Danfoss | Climate Solutions | 2022.10

In the principle diagram shown in Figure 11.14, the industrial subcritical CO_2 pump-circulated system remains the same as in the NH_3/CO_2 cascade system shown in Figure 11.13. However, it is now directly connected to a transcritical CO_2 cycle.

The NH_3 charge is now completely replaced by CO_2 as a refrigerant. However, this huge benefit comes with an efficiency compromise. During transcritical operation mode, the CO_2 transcritical systems have a higher power consumption compared to the 2-stage NH_3 systems. This, of course, depends on the climate and the number of transcritical running hours during the year.

Referring to calculations made by Danfoss (and presented at the 2019 IIR conference in Montreal), it is clear that no matter how much a transcritical R744 system is optimised, from an efficiency point of view it cannot compete with a two-stage R717 system, although it does come relatively close in colder climates.

The changing refrigerant trends and the successful adaptation of 2-stage commercial transcritical CO_2 refrigeration systems working with direct expansion in food retail applications and small commercial refrigeration plants, however, has increased the interest in pump circulation systems for larger refrigeration capacities or typical applications like ice rinks, plate freezers and common air coolers.

Other principles are possible of course, e.g. a combination of pumped on MT and DX on LT, see Figure 11.15 where the LT load is relatively low compared to the MT load. Sometimes, by contrast, when a large LT load is available (e.g. plate freezers) and only a low-load MT (ie working areas), the MT load is relatively low compared to the LT load. Then it might be considered to do MT with a DX cycle. See Figure 11.16.

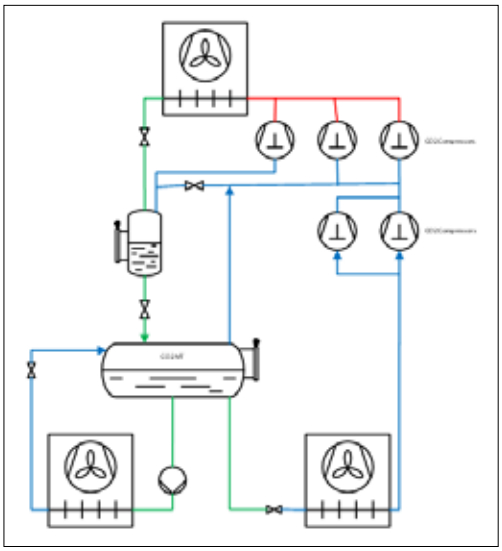

Figure 11.15: MT pump circulation and LT DX

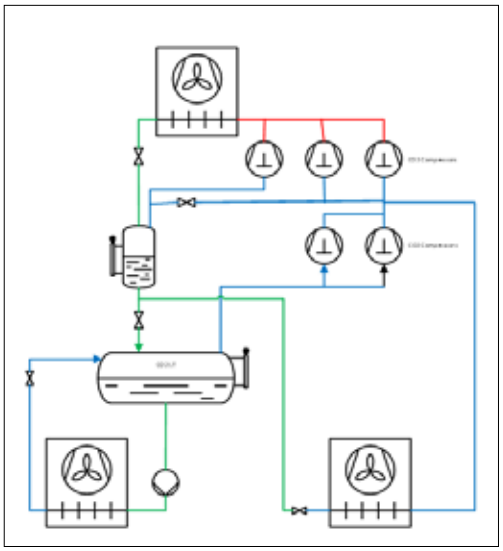

Figure 11.16: LT pump circulation and MT DX

11.4 Industrial CO_2 transcritical systems

11.4.1 Transcritical pump-circulated systems

There is an increasing demand for industrial refrigeration systems that use CO_2 transcritical technology when NH_3 is not an option or not allowed. The requirements, however, differ from commercial direct expansion systems. Considerations like performance, lifetime, reliability, durability, efficiency, safety and serviceability create different expectations. The well-known industrial pump-circulating systems with innovative hot-gas defrost familiar in NH_3 and NH_3/CO_2 plants can obviously meet this demand. Despite the increasing capacity of available transcritical compressors on the market, a considerable number of compressors are still needed to satisfy the popular capacity ranges in the 1-2 MW (285-570TR) range, but also up to 3-4 MW (857-1142TR). Often with a typical 2 temperature level requirement. Transcritical CO_2 racks developed and matured in recent years. One option for achieving larger capacities is to connect several racks in parallel and connect them to the typical industrial CO_2 pump-circulated systems that has been the standard for years.

System description

The system as shown in Figure 11.17 is a combination of the commercial booster system, with parallel compression as described in chapter 11.2.2, together with a subcritical CO_2 pump-circulation system that is well known from the NH_3/CO_2 cascades. The transcritical system is represented in light grey and the subcritical pump system in black. The transcritical system is, in this case, a 2-stage system with a low-temperature (LT,11) and medium-temperature (MT,10) suction line. The suction lines are not connected to the evaporators as is the case in direct expansion systems, but to CO_2 LT and MT liquid receivers respectively. These receivers contain CO_2 liquid which is pumped around through the evaporators. Liquid and CO_2 gas are separated in these receivers and that is why

they are called separators. The CO_2 gas from the separators is taken to the compressor suction lines which compress it to the gas coolers, where it is cooled (6) and stored as liquid (8) in the intermediate receiver of the transcritical system.

The liquid level of this receiver is proportionally controlled and the liquid expands into a liquid/gas mixture (13) into the MT separator. Figure 11.18 shows the log(P)-h diagram of the system.

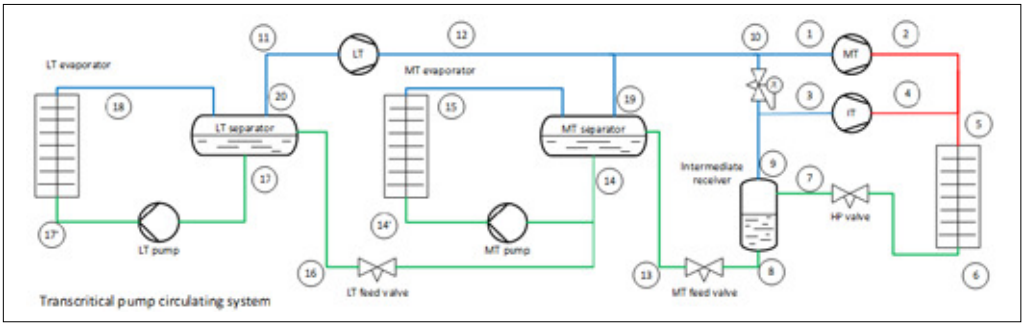

Figure 11.17: Principle of an industrial CO_2 transcritical pump-circulation system

MT system

In a direct expansion system, this liquid (8) would be injected into the evaporators. In a pump circulation system however, the liquid expands (13) through the MT feed valve and is injected into the MT separator. The liquid (14) accumulates in the MT separator and the gas (19) is drawn into the MT suction lines. The liquid (14) is increased in pressure (14') and pumped to the MT evaporators. The pump creates a head pressure to overcome the friction losses of the valve trains, pipes and the MT evaporators. It is possible to pump slightly more liquid through the evaporator, so that the evaporator's internal surface is fully wetted and optimally used to transfer heat. The liquid/gas mixture at the evaporator outlet (15) is sent back into the MT separator again, where the gas (19) is separated from the liquid (14).

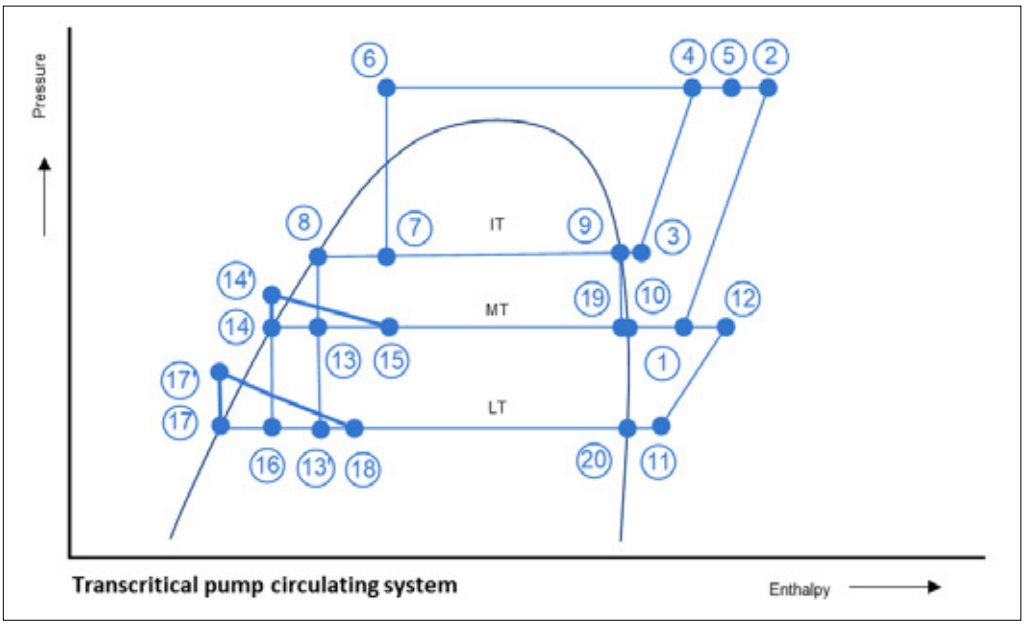

Figure 11.18: log(P)-h diagram of an industrial CO_2 transcritical pump-circulated system

LT system

Apart from being pumped through the MT evaporators, the liquid (14) from the MT receiver also expands (16) through the LT feed valve into the LT separator. Again, in a direct expansion system this mixture would be injected into the evaporators. In a pump circulation system, however, this mixture is separated into liquid and gas. The LT liquid (17) accumulates in the LT separator and the gas (20) is drawn into the LT suction lines. The liquid (17) is increased in pressure (17') and pumped to the LT evaporators. The pump creates a head pressure to overcome the friction losses of the valve trains, pipes and the LT evaporator. It is possible to pump slightly more liquid through the evaporator, so that the evaporator's internal surface is fully wetted and optimally used to transfer heat. The liquid/gas mixture at the evaporator outlet (18) is sent back into the LT separator again where the gas (20) is separated from the liquid (17).

© Danfoss | Climate Solutions | 2022.10

The advantages of pump-circulating systems are as follows:

- Can handle high peak demands safely and reliably due to the two-phase state and liquid separation
- Liquid overfeed ensures optimal internal wetted surface and thus optimal efficiency of the evaporator.
- Liquid overfeed also creates a better heat transfer coefficient for the evaporator.
- There is no superheat available, so evaporator control is simple.
- No superheat means lower temperature difference between evaporating temperature and ambient temperature, evaporating temperature can rise and efficiency will increase.
- Some evaporators, often very specialized evaporators, are not suited for DX operation and thus flooded is necessary.
- Hot-gas defrost is the most effective and energy efficient defrost method and this is relatively simple in a pump circulation system, because the condensate drain can be safely returned into the separators. And when using liquid drain control, the efficiency even increases.

The slight liquid overfeed we call circulation rate. A typical circulation rate for industrial air coolers working with CO_2 as a refrigerant is between 1.2 and 1.5.

Circulating rate n		
	State at outlet evaporator	
n	**Liquid fraction**	**Gas fraction**
1	0	1
1,2	0,2	1
1,5	0,5	1
2	1	1
3	2	1
4	3	1

Table 11.4.1: Relationship between circulation rate and liquid/gas ratio

11.4.2 Liquid level and pump control in CO_2 pump-circulated systems

Key differentiators of this system compared with a direct expansion system are the liquid separators and the circulation pumps. The CO_2 liquid level in the separators fluctuates with the cooling demand. Heavy cooling demand makes the level rise because the amount of gas in the overfeed evaporators increases. However, a lower cooling demand will decrease the level. It is important to keep the liquid level within limits. An excessively high liquid level increases the chance of liquid drops entering the compressor suction lines, causing liquid slugging. However, an excessively low level will cause cavitation to the pumps. Furthermore, the pumps also need to be controlled. The pumps need to run within a dedicated part of the pump curve to ensure optimal combination of flow, head pressure and differential pressure. Liquid level and pump control for CO_2 are broadly similar to when NH_3 is used as a refrigerant. This is described in chapter 8 and 4. However, a differentiator is the relatively high P/T relation for CO_2 compared to NH_3. This means a higher sensitivity for cavitation in the pump suction line. This can be solved by ensuring sufficient liquid suction head upstream of the pumps, avoiding sudden pressure drops in the separator (smooth capacity control together with an accurate level control.

11.4.3 Evaporator control for pump-circulation CO_2 systems

Danfoss Industrial Refrigeration offers a full portfolio of low-temperature steel valves and control solutions suitable for both NH_3 and CO_2 pump-circulation systems. The majority of the valves belong to the Danfoss Flexline™ series which offers clever simplicity, advanced flexibilty and time-saving efficiency.
The range incorporates the ICS control valves, the ICM motor valves, the ICF modular valve stations and the SVL line components. All of these products are designed for NH_3 and CO_2 and have a PS of 52 bar (754 psi) and a wide range of capacities is available.

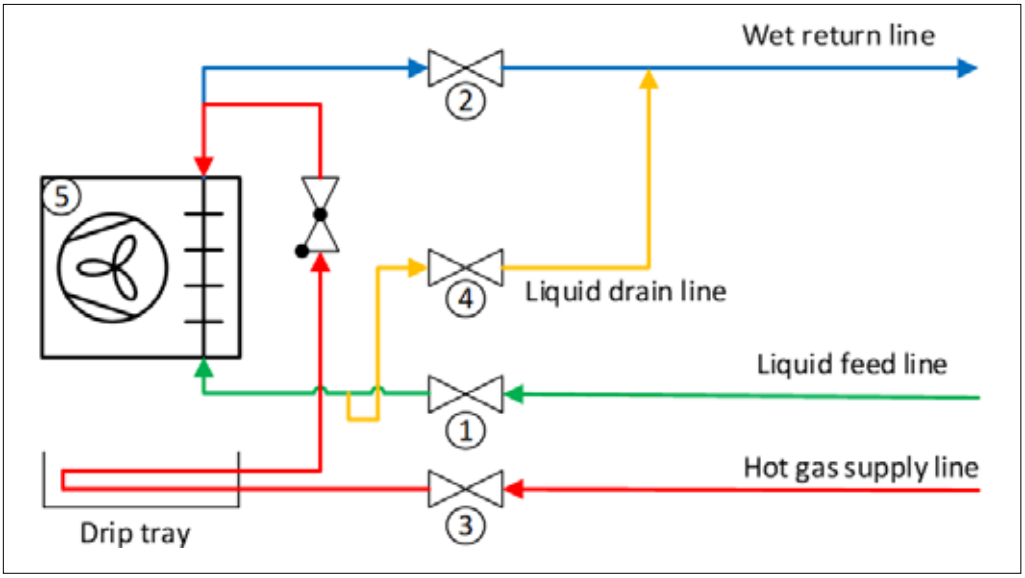

Figure 11.19: Principle of evaporator control of a CO_2 pump-circulated system

In Figure 11.19 we see a typical principle diagram for a pump-circulating system with hot-gas defrost. The principle is described in Chapter 5.6. With CO_2 as a refrigerant, the same principle can be followed. However, because the pressures and especially the differential pressures are higher, some consideration is needed regarding valve selection. First of all, the maximum working pressure is higher compared with NH_3. Systems with hot-gas defrost typically need a PS of 52 bar (754 psi), so the valves must be approved for that, please always verify that. Secondly, in some cases, higher standstill pressures are requested. Danfoss Industrial Refrigeration has some specific valve types rated for 65 bar (943 psi), please contact Danfoss. If higher standstill pressures can occur, a standstill unit is needed to keep the pressure in the system under the permissible maximum. Because of these specific CO_2-related differentiators, in the next paragraphs, the evaporator valves and valve stations are explained specifically in relation to CO_2.

11.4.4 Danfoss Industrial evaporator controller, EKE 400

The EKE 400 is designed to control industrial refrigeration evaporators, for both small and large systems. Together with Danfoss Flexline valves, it completes the Danfoss offering for industrial CO_2 systems.

It manages the complete operation in cooling and defrost mode for optimal operation and defrost sequence (ammonia, CO_2, and HFC/HCFC-based systems).

It is applicable for defrosting flooded evaporators and supports multiple defrost methods, including hot-gas defrost (pressure control/liquid drain), electrical defrost, and water/brine defrost.

An easy-to-use Wizard enables quick set-up of key parameters and efficient commissioning, and the predefined process sequence ensures reliable operation and defrost.

The EKE 400 is especially designed to get the best performance from Danfoss valves, however, it also works with non-Danfoss valves.

EKE 400 includes Modbus communication which allows integration into a central PLC system. However, it can also be used without central PLC as a standalone controller.

© Danfoss | Climate Solutions | 2022.10

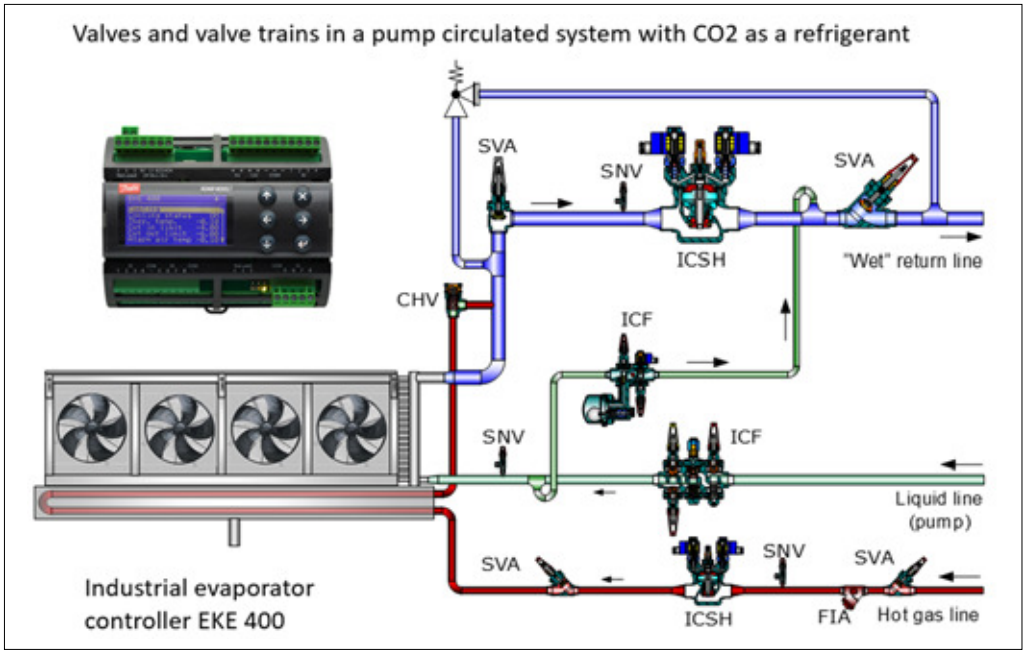

Figure 11.20: Example of Danfoss Industrial evaporator control in a CO_2 pump-circulated system

Highlights

- Distributed Control Systems (DCS) reduce the installation cost for controls compared to central PLC systems
- Easy-to-use Wizard enables quick setup of key parameters, reduced need for PLC programming in the field
- Replication of setup to multiple EKE 400 units via Danfoss tools
- Especially designed to get the best performance from Danfoss valves
- Also works with non-Danfoss valves
- Modbus communication allows integration to a central PLC system
- CANbus communication for interconnection of multiple EKE 400 controllers and process alignment
- Can be used without a central PLC as standalone

11.4.5 Valves for the liquid feed line (1)

The injected liquid at the correct temperature is pumped from a separator to the evaporators. When liquid is needed, a solenoid valve in front of the evaporator is opened. A manual regulating valve is usually fitted after the solenoid valve to allow the required circulation rate to be set and hydraulic balance to be achieved in the system.

Temperature control in evaporators can be managed as follows:

ON/OFF solenoid valve for temperature control and regulating valve for distribution control

The solenoid valve is opened for several minutes or longer, and during injection the mass of the refrigerant flow is constant. The circulating rate is controlled by a manual regulating valve (ICFR). It is important to set this regulating valve at the right opening degree. Too high an opening degree will lead to frequent operation of the solenoid valve which results in increased wear. Too low an opening degree will starve the evaporator of liquid refrigerant. A check valve is also installed to prevent hot gas entering the liquid line during defrost. The pressure drop across the solenoid valve should be relatively low, i.e. between 0.1 and 0.4 bar (1.45 and 5.8 psi), depending on the needed opening pressure differential. The pressure drop across the regulating valve depends on how the system is balanced, but is typically between 0.5 and 2 bar (7.3 and 29 psi). A Danfoss 12W AC or 20 W AC coil can typically do the job. In a traditional flooded system, the liquid injection is controlled by a thermostat which constantly measures the air temperature. Several options are available: as shown in Figure 11.21. Please use Danfoss Coolselector calculation software for a correct selection of these valves.

Option 1

The compact ICF valve station incorporating multiple valves, like a stop valve (ICFS), filter (ICFF), solenoid valve (ICFE), check valve (ICFC), regulating valve (ICFR) and stop valve (ICFS). Other configurations are also available. The pressure drop across the solenoid valve should be relatively low. Please always refer to the minimum needed pressure drop keeping the valve open. A 12 or 20 W AC Danfoss coil can typically do the job.

Option 2

A combination of standalone valves. For the solenoid valve, EVRS(T) and ICS are suitable for CO_2 as a refrigerant. For the line components, stop valves (SVA), manual regulating valves (REG), filters (FIA), check valves (CHV-X) and stop/check valves (SCA-X) are suitable for use with CO_2 as a refrigerant.PS of EVRS(T) is limited. Please check the specs.

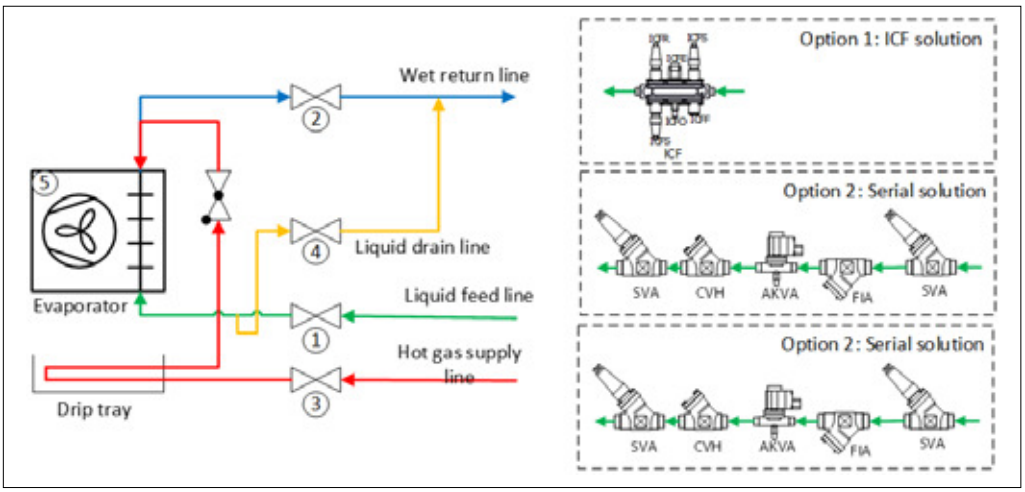

Figure 11.21: Application example of pumped liquid circulation with solenoid and regulation valves for liquid injection

Pulse Width Modulation (PWM) valves for both distribution and temperature control

Instead of injecting periodically, as described above, one can also constantly adapt the liquid injection to the actual demand. This can be done with a PWM AKVA valve or an ICF with an ICFA solenoid module. The air temperature is constantly measured and compared to the reference temperature with a digital thermostat. When the air temperature reaches the set point, the PWM valve opening is reduced. This decreases the degree of opening during the cycle, resulting in less capacity. The duration of a cycle is adjustable. In a flooded system, this means that the average refrigerant flow is constantly controlled and adapted to demand. This approach to liquid injection in a flooded system is very versatile. The amount of injected liquid can be controlled exactly, which increases the accuracy and energy efficiency of the system. It is important to size the PWM valve correctly. It should be checked that the pressure drop across the valve in relation to the circulation rate provides enough capacity. The pressure drop across the PWM valve alone in relation to the requested circulation rate will define the max. capacity of the PWM valve. Several options are available: as shown in Figure 11.22. Please use Danfoss Coolselector calculation software for a correct selection of these valves.

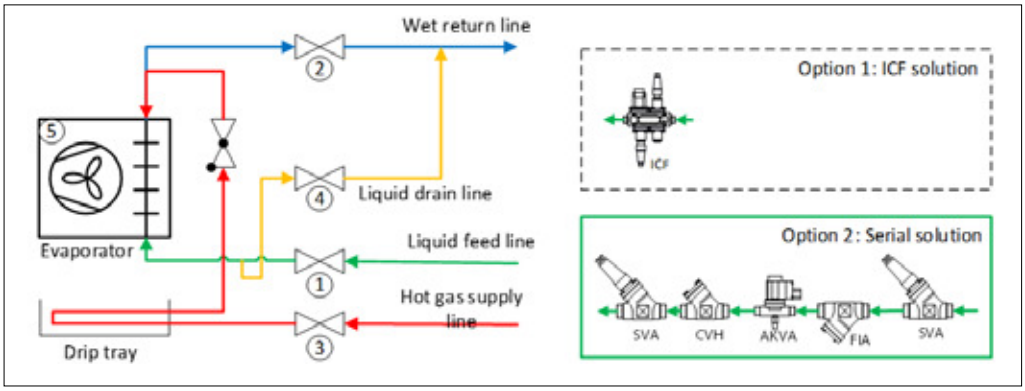

Figure 11.22: Application example of pumped liquid circulation with PWM valves for liquid injection

Option 1

The compact ICF valve station incorporating multiple valves, like a stop valve (ICFS), filter (ICFF), PWM valve (ICFA), check valve (ICFC), and stop valve (ICFS). Other confurations are also available. The PWM valve module is only available for the ICF20 and is called ICFA20. Please contact Danfoss for available orifices and selection.

Option 2

A combination of standalone valves. The AKVA10/15/20 valves are the only valves allowed for PWM operation due to the design. For the line components, stop valves (SVA), filters (FIA), check valves (CHV-X) and stop/check valves (SCA-X) are suitable for use with CO_2 as a refrigerant. PS of AKVA is limited. Please check the specs.

© Danfoss | Climate Solutions | 2022.10

11.4.6 Valves for the wet return line (2)

A wet return valve station in a typical pump-circulated system is located at position 2 as shown in Figure 11.23. The function of the wet return valve is to close the wet return line during defrost. During cooling mode, the pressure drop across the valve is advised to be as low as practically possible in order to avoid generating system losses. Furthermore, at the end of a hot-gas defrost cycle, there is a high differential pressure between the evaporator and the suction line, so it is necessary to relieve the pressure slowly, allowing the pressure to be equalized before opening fully to ensure smooth operation and avoid liquid slugging in the suction line.

The main selection criteria for such a valve are:

- low pressure drop
- slow opening characteristics after defrost to avoid liquid hammer or pressure shock
- Sufficient Maximum Opening Pressure Difference (MOPD) to overcome the high pressure difference between the evaporator and the liquid separator upon opening just after a defrost.

For CO_2, the relationship between pressure and temperature (dP/dT) is much higher than for NH_3, i.e. 0.1 bar pressure drop at -40 °C (-40 °F) results in 2.8 K (5 °F) temperature drop in NH_3 and only 0.3 K (0.5 °F) temperature drop in CO_2.

Especially for CO_2 where these pressure differentials are much higher compared to, for example, NH_3, the MOPD of a valve must be checked. The MOPD is dependent on the valve type and for solenoid vales also on the coil power. If the MOPD of the valve is lower than the actual differential pressure across the valve prior to opening, the valve will stay closed.

Example

Defrost temperature: +10 °C (50 °F)

Defrost pressure: 45 bar abs (652 psia)

Evaporating temperature (Te) = -40 °C (40 °F)

Evaporating pressure (Pe)Pe = 10 bar abs (145 psia)

dP = 45-10 = 35 bar / dP 652-145 = 508 psi

MOPD valve 2 must be > 35 bar / 507 psi

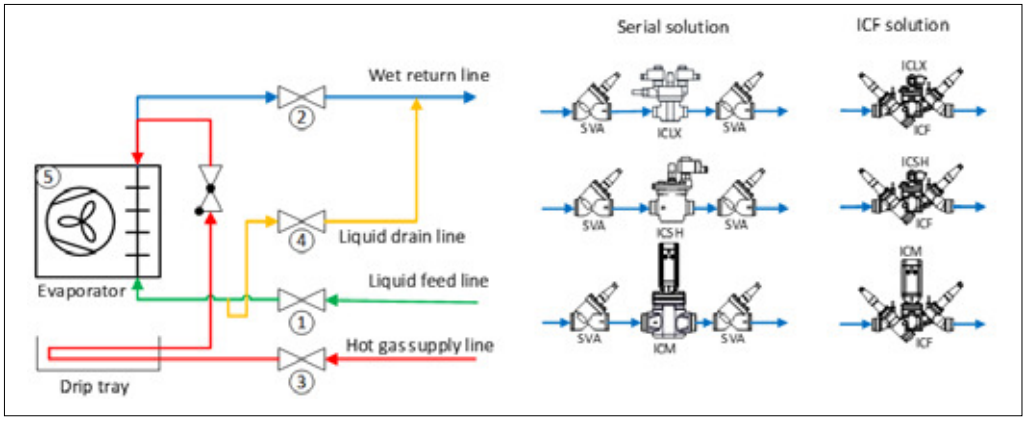

Figure 11.23: Application example of CO_2 pumped liquid circulation with suction valves for the wet return line

Danfoss developed 4 valve types for this function:

Please use Danfoss Coolselector calculation software for a correct selection of these valves.

The ICLX

This is a mechanical 2-step opening controlled solenoid valve, which equalizes the evaporator pressure and automatically opens the 2nd step whenever the pressure is equalized sufficiently. The valve fully opens driven by external pressure, i.e. hot gas, allowing use of the kV value at full opening degree, resulting in a lower pressure drop. The ICLX is controlled with 2 solenoid valves and only needs 2 wires (1 signal) from the controller for the voltage supply to the coils.

The MOPD of the valve is dependent on the external pressure and the used coils. This is especially important for CO_2 because sometimes the requested external pressure is outside the compressor envelope. Please refer to the instruction manual of ICLX.

The ICSH

This is a dual position solenoid valve originally designed for controlled opening of hotgas lines. However for applications with CO_2 as a refrigerant, it's also approved to be used in the wet return lines. Here, it equalizes the evaporator pressure after a defrost cycle. Step 1 is 20% of the kV value of step 2 and allows a smooth pressure build-up in the evaporator.

Steps 1 and 2 are controlled by an EVM pilot valve and, for maximum operating freedom, step 2 can be made dependent or independent of step 1. The steps can be controlled by a PLC where the delay between steps 1 and 2 can be freely set.

The ICM

ICM: Proportional motor valve type. The valve is controlled by an actuator, ICAD. The ICAD motor is connected to the ICM valve with a magnetic coupling, enabling easy service and maintenance activities without the need to open the ICM valve. The valve is designed to be controlled in 2 ways:

Analogue. The opening degree is controlled, and the lifting height responds proportionally with an analogue input signal (i.e. 0-20/4-20 mA and 0-10/2-10 V).

On/Off. The valve responds to a digital input contact and the opening speed can be set to the requested demand. The valve is fully closed or fully open or moving towards one of these positions.

The MOPD of these valves depends on the valve size and the quality of the supply voltage sent to the stepper motor.

The ICF solution
ICLX modules are available in ICF50/65
ICSH modules are available in ICF 50/65
ICM modules are available in ICF 20/25/50/65

11.4.7 Valves for the hot-gas defrost line (3)

An explanation of hot-gas defrost in a pumped circulation system is described in chapter 5.6. This solution must only be used in refrigeration systems with three or more evaporators. As a rule of thumb, only a third of the total evaporator capacity can be under defrost at a given time. All examples in this document are shown with hot gas injection into evaporators in the top of the evaporator in the suction line. This method is generally seen as a safe solution with a very low risk of 'liquid hammer'. Hot-gas defrost systems must be designed and controlled correctly to achieve the expected operation, behaviour and result. During a cooling cycle, the hot-gas supply line is closed. However, during a defrost cycle, the hot-gas supply valve is slowly opened and injects hot gas into the evaporator. Liquid and wet suction lines are closed during the hot-gas injection. The hot gas condenses in the evaporator and defrosts the ice on both the evaporator and the drip tray. The condensed liquid is sent back via the drain line to the wet return line. The defrost time is either controlled by a timer or with a temperature sensor on the evaporator. Hot-gas supply lines are designed to transport hot gas. However, because these lines cross cold rooms or long areas with relatively low ambient temperatures, it is often inevitable that some of the hot gas will condense in these lines, even when insulated. Because liquid in hot-gas lines can create serious liquid hammer and CO_2 plants work with higher system- and differential pressures, the risk of liquid hammer in CO_2 hot-gas defrost systems is higher than with ammonia. Some design principles should therefore be observed:

- Slowly increase the pressure in the evaporator at the start of a defrost cycle. Use valves principles that secure a controlled and slow opening.
- It is good practice to install the hot-gas lines with a slope, and then install drain facilities at the lowest point. This could be a float valve, i.e. ICF with solenoid and ICFD function, or a periodically activated expansion valve.
- Ensure sufficient Maximum Opening Pressure Difference (MOPD) of the hotgas supply valves to overcome the high pressure difference between the hot-gas supply line and the evaporator at start of defrost.

Example

Hot-gas supply pressure: 48 bar (696 psia)

Evaporating temperature (Te) = -40 °C (= 40 °F)

Evaporating pressure (Pe) = 10 bar (145 psia)

dP = 48-10 = 38 bar / dP 691-145 = 551 psi

MOPD valve 3 must be > 38 bar / 551 psi

© Danfoss | Climate Solutions | 2022.10

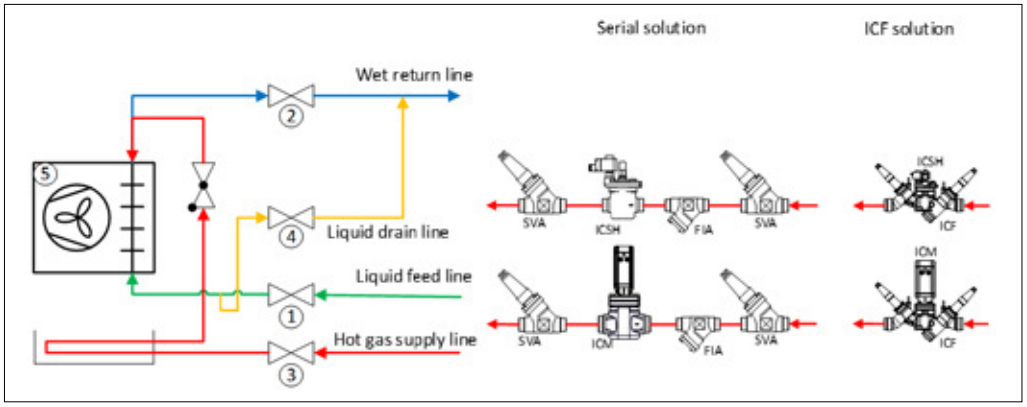

Figure 11.24: Application example of pumped liquid circulation with hot-gas valves for the hot-gas supply line

Danfoss developed 3 valve types for this function:

Please use Danfoss Coolselector calculation software for a correct selection of these valves.

The ICSH

ICSH: Dual position solenoid valve. Step 1 is 20% of the kV value of step 2 and allows a smooth pressure build-up in the evaporator. Steps 1 and 2 are controlled by an EVM pilot valve and, for maximum operating freedom, step 2 can be made dependent or independent of step 1. The steps can be controlled by a PLC where the delay between steps 1 and 2 can be freely set.

The ICM

ICM: Proportional motor valve type. The valve is controlled by an actuator, ICAD. The ICAD motor is connected to the ICM valve with a magnetic coupling, enabling easy service and maintenance activities without the need to open the ICM valve.

The valve is designed to be controlled in 2 ways:

Analogue. The opening degree is controlled, and the lifting height responds proportionally with an analogue input signal (i.e. 0-20/4-20 mA and 0-10/2-10 V).

On/Off. The valve responds to a digital input contact and the opening speed can be set to the requested demand. The valve is fully closed or fully open or moving towards one of these positions.

The MOPD of these valves depends on the valve size and the quality of the supply voltage sent to the stepper motor.

The ICF solution
ICSH modules are available in ICF 50/65
ICM modules are available in ICF 20/25/50/65

11.4.8 Valves for the liquid-drain defrost line (4)

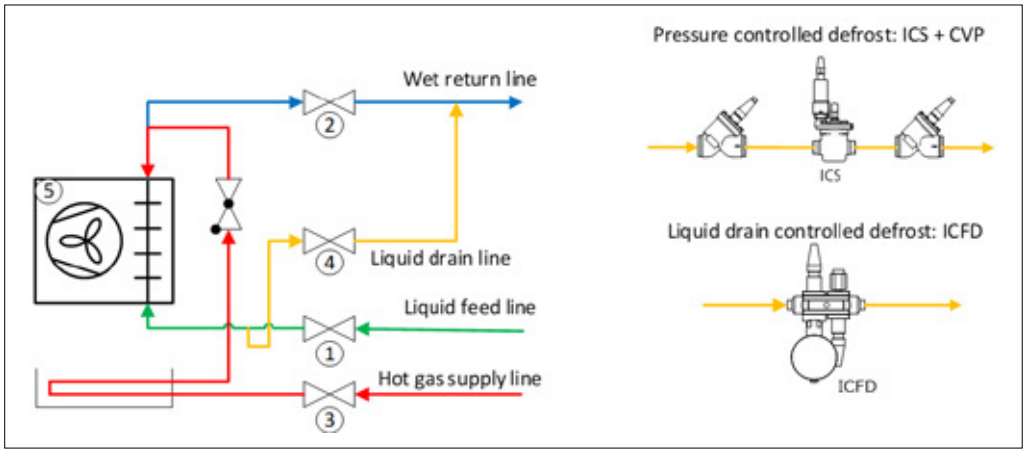

Figure 11.25: Application example of drain control in the liquid drain defrost line

During defrost, ideally, all hot gas should condense and return as 100% liquid to the liquid seperator. The benefit for a pump circulated CO_2 transcritical system is that condensed liquid remains in the subcritical part of the system and will not interfere with the transcritical cycle.

However, without any control, large amounts of high-energy gas flow uncondensed back to the system, which have to be recompressed and this results in an efficiency loss. So for a safe and efficient defrost, it is very important that these drain lines are controlled. As explained in chapter 5.6, there are two possible ways of doing so.

Pressure-controlled defrost

The first one is pressure-controlled defrost. With pressure-controlled defrost, the evaporator pressure is controlled, ensuring a defrost process sufficiently above the melting point of ice. A controlled pressure with a saturated temperature between 7 to 12 °C (45 to 54 °F) has shown to be very effective. However, it is unavoidable that during the defrost process, some blow-by gas will be formed (with relatively high enthalpy) and sent back to the system. This must be recompressed and is a loss. See Figure 11.26.

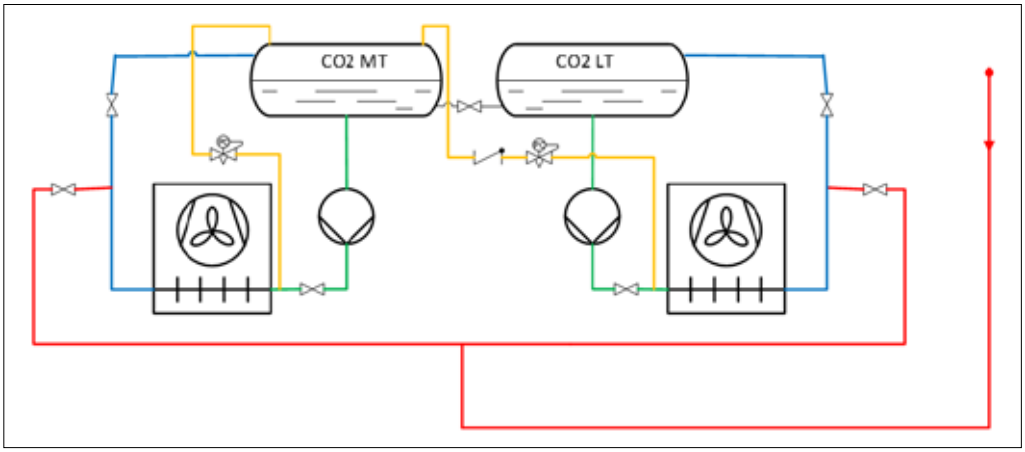

Figure 11.26: Application example of pressure-controlled defrost

Note: if pressure-controlled defrost is chosen, it is important that the condensate of the LT system is drained into the separator of the MT system. This maximises system efficiency. A check valve must be mounted downstream of the pressure control valve in order to prevent MT pressure being drained into the LT system during cooling mode.

The ICS + CVP-H

The ICS is a mechanical servo-controlled valve. The function of its pilot valve determines the function of the valve. CVP-H is a pressure control pilot and installed in an ISC it provides an inlet pressure functionality. CVP H has a set pressure between 25-52 bar (363-754 psi).

The ICM+ ICAD ICM

Proportional motor valve type. The valve is controlled by an actuator, ICAD. The ICAD motor is connected to the ICM valve with a magnetic coupling, enabling easy service and maintenance activities without the need to open the ICM valve. The pressure can be controlled with analogue signals. Analogue. The opening degree is controlled, and the lifting height responds proportionally with an analogue input signal (i.e. 0-20/4-20 mA and 0-10/2-10 V).

The MOPD of these valves depends on the valve size and the quality of the supply voltage sent to the stepper motor.

To ensure the correct selection of these valves, the defrost temperature, the defrost capacity factor, the main hot-gas supply temperature, the reduced hot-gas supply temperature, and the drain conditions must be defined. This can be done in Coolselector as explained in chapter 5.6. Please use Danfoss Coolselector calculation software for a correct selection of these valves.

Liquid-controlled defrost

The second option is liquid-controlled defrost. The liquid-controlled defrost method is more efficient than a pressure-controlled defrost. It ensures that condensed liquid is sent back to the system with a minimum amount of blow-by gass. This liquid has a relatively low enthaply. The liquid can be sent back to the liquid separators. See an example in Figure 11.27.

© Danfoss | Climate Solutions | 2022.10

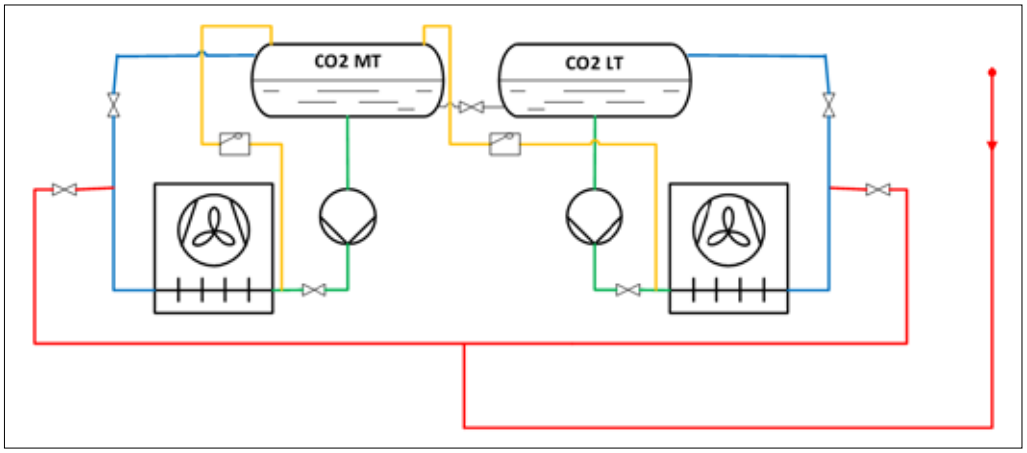

Figure 11.27: Application example of liquid-controlled defrost

ICFD defrost module

This module is designed for the drainage of defrost liquid. It can be mounted on ICF20. The ICF20D module is designed for NH_3 and the ICFD20C module is designed for CO_2. The gas in the system upon start-up of the defrost process is removed only through a small gas bypass orifice that is built into the ICFD defrost module. Furthermore, the orifice provides sufficient lift for the condensed liquid if needed. It is very important to get and keep the refrigerant in the liquid phase. The ICFD defrost module must be installed at the drain outlet of the evaporators, which must be located at the lowest point of the evaporator and equipped with P-traps as explained in Figure 11.28 and chapter 5.6.

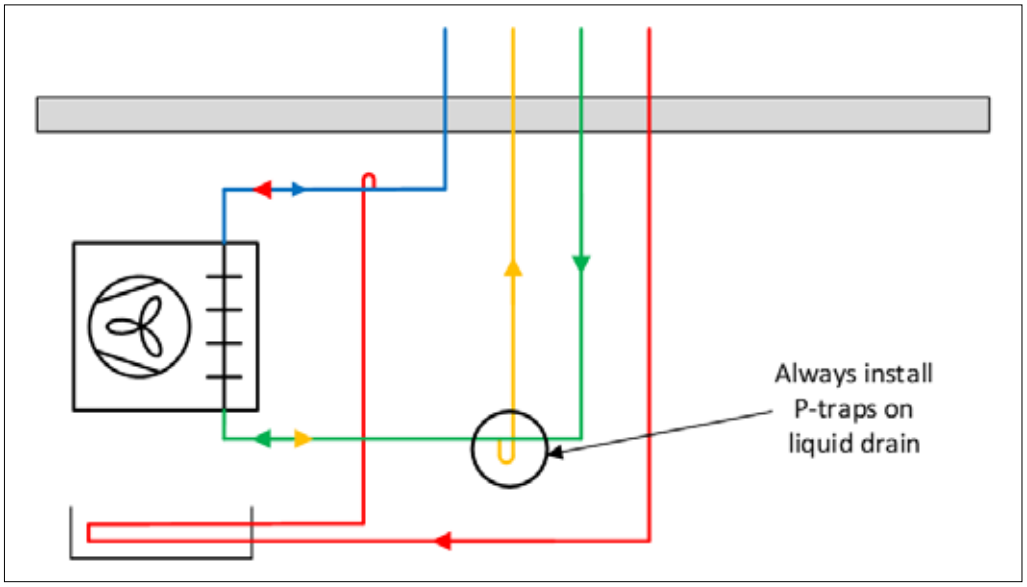

Figure 11.28: P-trap at drain line connection

It is important to take the necessary precautions to minimize the pressure drop to avoid flash gas. Any pressure loss will reduce the liquid drain capacity. For evaporators with distribution nozzles at the drain outlet (side/bottom feed in Figure 11.29), the liquid passing the nozzles during defrost will create a certain pressure drop in the drain line. This pressure drop must be taken into account when determining the total pressure loss. Please use Danfoss Coolselector calculation software for a correct selection of these valves.

- Always install a P-trap at the drain line connection to the evaporator to collect the liquid. See Figure 11.28.
- To minimize total pressure drop, the lifting height of the liquid should not exceed 5 m (16.5 ft).
- For further information regarding placement of the ICFD liquid drain, please refer to the relevant documentation.

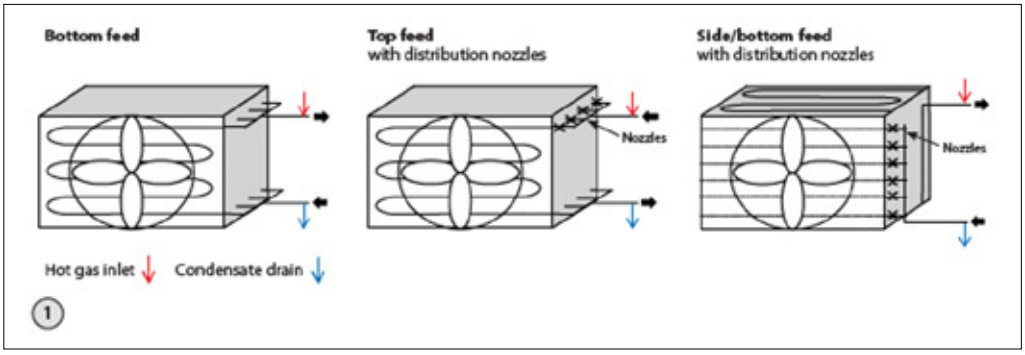

Figure 11.29: The drain lines should always be located at the lowest point of the evaporator

11.5 Defrosting of industrial pump-circulated transcritical systems

Hot gas defrost is the most efficient way of defrosting. It is a so-called 'internal' defrost, meaning the heat is supplied from inside the evaporator tubes. This results in a good internal heat transfer coefficient, with minimum convection losses to the cold room, so less compressor power is needed to compensate for that. Because they are relatively fast and effective for removing ice compared to some of the other methods, it is generally accepted as the standard in the industrial refrigeration sector. Despite being proven to be very efficient systems, they need to be designed and controlled correctly, in order to obtain the expected performance. Experience globally shows that there are several pitfalls in hot-gas defrost systems, which can lead to ineffective systems, and in a worst case scenario, serious accidents if appropriate design and operation of the system are not followed. From an efficiency point of view, the goal is to return the highest amount of liquid condensate from the evaporator back to the liquid receiver. All liquid will be separated in the receiver, and pumped out to the evaporators in cooling mode. A complete description of how to perform hot-gas defrost is described in chapter 5.6.

11.5.1 Optimal defrost pressure

It is a misconception that a higher defrost pressure or temperature automatically gives a better defrost result. However, an excessively low defrost pressure also does not give the required results. To defrost a CO_2 evaporator with hot gas, the saturated temperature in the evaporator during the defrost cycle should be sufficiently above the melting point of ice. A saturated temperature range in the evaporator during a defrost cycle between 7-12 °C (45-54 °F) has proven to give satisfactory results in most cases. This is equal to a saturated pressure range of approx. 42 and 47 bar (609 and 682 psi).

Please be aware of possible pressure losses in pipes, components and controls to the evaporator. The hotgas supply pressure during a defrost cycle must be high enough to overcome this pressure loss. Note: using the superheat of a discharge gas with a saturated pressure below zero degrees will not give satisfactory results. For a proper defrost, the condensing energy of the hot gas should be used. See Figure 11.30.

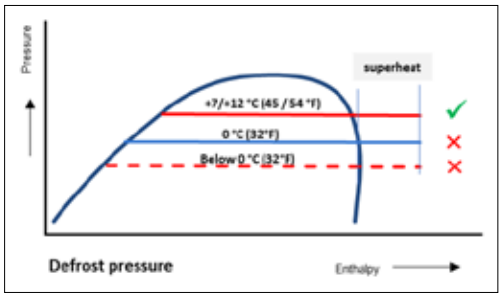

Figure 11.30: Optimal saturated defrost temperatures

11.5.2 Hot gas source

When hotgas defrost of evaporators in a sub critical CO_2 system is applied, the supplied hotgas pressure must be lower than the maximum working pressure of the parts of the subcritical system, where the hotgas supply lines are connected to. In order to enable a safe and efficient hotgas defrost, it makes sense to produce hotgas with a pressure close to the advised defrost pressure and lower then the allowed maximum working pressure.
If it is produced with compressors, then basically there are 2 options:Create hotgas with the discharge gas of LT compressors, or create it with the discharge gas of MT compressors. The main difference between these 2 compressor types are the reached discharge pressures and the working envelopes.

Discharge gas from LT compressors

Typically the hotgas pressure closest to the advised defrost pressure can be generated by LT compressors. The discharge pressure needs to be sufficiently lifted in order to reach the advised defrost pressure in the evaporators. This can be seen in the log(P)-h diagram in Figure 11.31. Point A represents normal discharge pressure if the compressor is used in a booster system. The discharge pressure must be sufficiently lifted in a controlled way to a level where it's high enough, represented by point B. Point B represents the pressure of the hotgas sent to the evaporators of the sub critical system for defrosting. B is a controlled pressure, which must be lower than the maximum working pressure of the parts of the subcritical system where it's connected to, but higher than point C.

© Danfoss | Climate Solutions | 2022.10

C represents the requested defrost pressure in the evaporators during defrost. B-C must be larger than the pressure drop in the discharge lines, valves, evaporator distributor/nozzles and the evaporator itself. It should be checked if this pressure lifting together with the used suction pressure is within the compressor working envelope. Also the needed hotgas production should be calculated, in order to check if the LT compressors can deliver enough hotgas. Further, enough evaporator capacity must be available for the creation of the hotgas.

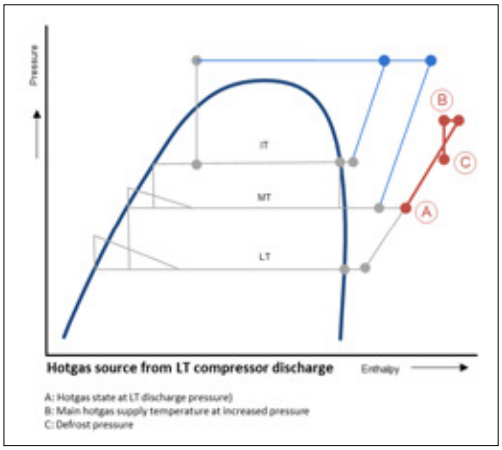

Figure 11.31: LT discharge source

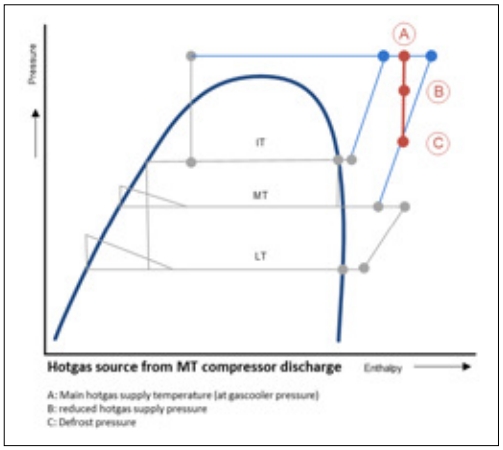

Figure 11.32: MT discharge source

Discharge gas from MT compressors

When using hotgas from MT compressors, also here, the goal is to produce the pressure as close as possible to the required defrost pressure. In this case, however, the discharge pressures are considerably higher than both the advised defrost pressures and the maximum working pressure of the connected parts of the subcritical pump-circulated system. Furthermore, the discharge temperatures are much higher compared to that of LT compressors.

Both the pressure and temperature conditions in the discharge line need to be controlled and decreased in order to perform a safe defrost. This is visualized in Figure 11.32. The hot gas is collected from point A. From point A, it is reduced in pressure and temperature to point B. B represents the pressure of the hotgas sent to the evaporators of the sub critical system for defrosting. B is a controlled pressure, which must be lower than the maximum working pressure of the parts of the subcritical system where it is connected to, but higher than the defrost pressure C.

C represents the requested defrost pressure in the evaporators during defrost. B-C must be larger than the pressure drop in the discharge lines, valves, evaporator distributor/nozzles and the evaporator itself.

The benefit of taking hot gas from the MT compressor discharge is that there is normally enough evaporator capacity available for the creation of the hotgas.

The downside however is that a high-pressure system has to be connected to a part of the system designed for lower pressure. This means that a well-designed pressure control system and safety system with back up has to be in place to ensure always safe hotgas pressures into that part of the system where the system pressure design is lower.

11.6 Oil management

Reliable and efficient oil management in refrigeration systems is extremely important. Refrigeration compressors are subject to heavy load conditions and a proper and reliable lubrication of all moving parts is crucial for a trouble-free working life. Conditions like suction and discharge pressures, suction and discharge temperatures, refrigerant type, rpm, part or full load conditions and of course the compressor type are all key parameters defining the requested oil specification. For that reason, compressor manufacturers have clear oil type recommendations for each compressor type, refrigerant type and application. Compressor oil is meant to lubricate the compressor only and the optimal situation would be that the oil remains inside the compressor. However, it is unavoidable that some of the compressor crankcase oil is mixed with refrigerant, compressed and ends up in the compressor discharge. This phenomenon is called oil carryover. Oil carryover should be kept to a minimum because the oil ultimately ends up in the refrigeration system. This presents two challenges.

First of all, the oil will form an oil film inside the evaporators (fouling), resulting in a loss of heat transfer and decreased system efficiency.

Secondly, the oil must be returned from the system back to the compressors. Depending on the system type, direct expansion or flooded systems, different oil management strategies need to be followed and applied.

It is important to realize that the typical commercial systems are of the DX type, where in most cases miscible oil is sent back to the suction lines. In industrial systems flooded operation is usually employed, and as the oil enters pump separators with the injected liquid, it does not leave with the suction gas. Consequently, it is necessary to collect the oil from the separators and the amount of effort to collect the oil is closely connected to the oil carryover. Because of this, it is of great importance that the primary oil separation in the oil separators is good.

11.6.1 Oil carryover and main oil separation

The CO_2 booster system has compressors on both LT, MT and IT level and, of course oil carryover occurs on all levels. However, MT and IT compressors have a higher oil carryover rate in comparison with the LT compressors. This is caused by the higher suction vapour densities and mostly higher cooling loads on MT level. With oil return in the suction line, this could lead to a situation where the oil distribution between compressors does not match the amount lost, with the consequence that the level inside the crankcases of the LT compressors rises above the maximum. Thus, the effectiveness of the oil separator must be high and in the range of the oil carryover rate of the LT compressors to ensure a balanced condition. This is a very important fact and leads us to the conclusion that the effectiveness of any oil management system starts with the oil carryover of the compressors (as low as possible) and the efficiency of the main oil separators (as high as possible). Oil separation can be situated both on the LT and MT/IT compressors. It is obvious that oil separators are always positioned in the MT compressor's discharge lines. Oil separators are not commonly seen in the discharge lines of the LT compressors. However, applying this will reduce the oil carryover to the MT compressor suction lines and thus reduce the absolute oil carryover of the MT compressors.

11.7 Oil return

11.7.1 Oil return in DX systems

For a reliable oil distribution under all load conditions, the application of a suitable oil management system is essential. Based on the combination of CO_2 and POE oil, the oil return in commercial direct expansion systems has proven to be reliable. Good miscibility of liquid CO_2 and POE oil, as well as high vapour densities on the suction side of the system, lead to an easy return of the lubricant to the compressors, provided that similar velocities in suction lines, e.g. with HFC refrigerants, are applied. Considering only a small number of compressors are in operation during part load conditions in a commercial application, e.g. during night time in winter. Consequently, mass flows and velocities inside the evaporators and suction lines are reduced and the return of lubricant becomes more challenging.
A sufficient oil supply to the compressors under various operating conditions can be ensured with proper oil management systems. In Figure 11.33, a simplified principle diagram is shown for oil management and oil return in a CO_2 transcritical system with miscible POE oil. Such a system obviously starts with a highly efficient oil separator and level sensor. This sensor controls an oil supply valve to the oil receiver. The valve controls both the oil flow to the oil receiver and simultaneously maintain the oil receiver pressure. The oil reservoir is equipped with a differential pressure valve, ensuring de-gassing of CO_2.
The differential pressure must be higher than the highest suction pressure applied in the system, e.g. the intermediate pressure level in the case of systems with parallel compression. A level sensor inside the oil receiver ensures that the oil level regulators on the compressors only open if this oil receiver level is sufficiently high. This is to avoid a hot-gas bypass to the compressor crankcase. For booster systems, the oil level regulators are assembled on the compressors of each suction group and connected to the common oil reservoir. In booster systems with parallel compression or Multi Ejectors and high loads for air conditioning compared to the MT and LT load, oil management is more sensitive. Possible options in the case of applying POE oils are pplication of highly efficient oil separators and oil reservoirs with a larger volume. And smart control strategies (pressurize reservoir on demand, dynamic controlled opening sequences of the oil level regulators).

© Danfoss | Climate Solutions | 2022.10

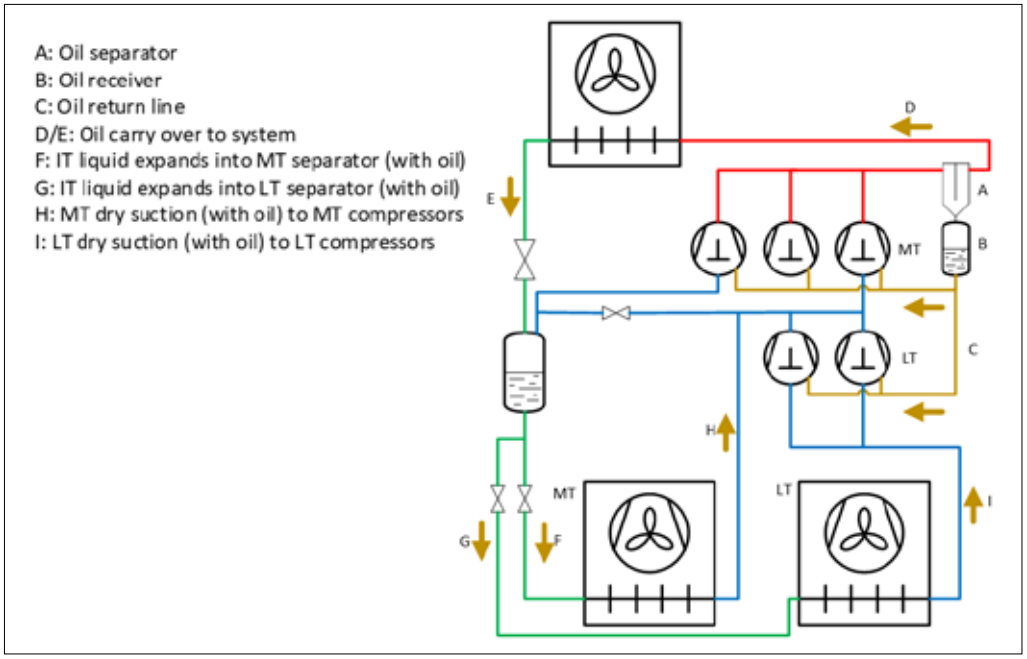

Figure 11.33: Oil management in a CO_2 transcritical DX system with miscible POE oil

11.7.2 Oil management in transcritical pump-circulating systems

In CO_2 pump circulation systems, the oil carried over to the system ultimately collects in the liquid separator. If there are more liquid separators, oil is collected in all of them. This oil has to be rectified and sent back to the compressors. The system oil can either be miscible or immiscible. If miscible oil is used, the liquid CO_2/oil mixture can be relatively simply rectified from the liquid separator. This is done with oil rectifiers, a well-known principle since many years in both freon- and CO_2 sub critical- pump circulated systems. If immiscible oil is used, it depends on the oil type and system conditions where the oil rich layer is located in the liquid separator. Several collection points can be used to skim from the right location. Regardless of the oil type, it has to be collected.

In Figure 11.34, a principle diagram shows the oil management principle in a pump-circulated CO_2 transcritical system with only one temperature level on medium temperature and miscible oil.

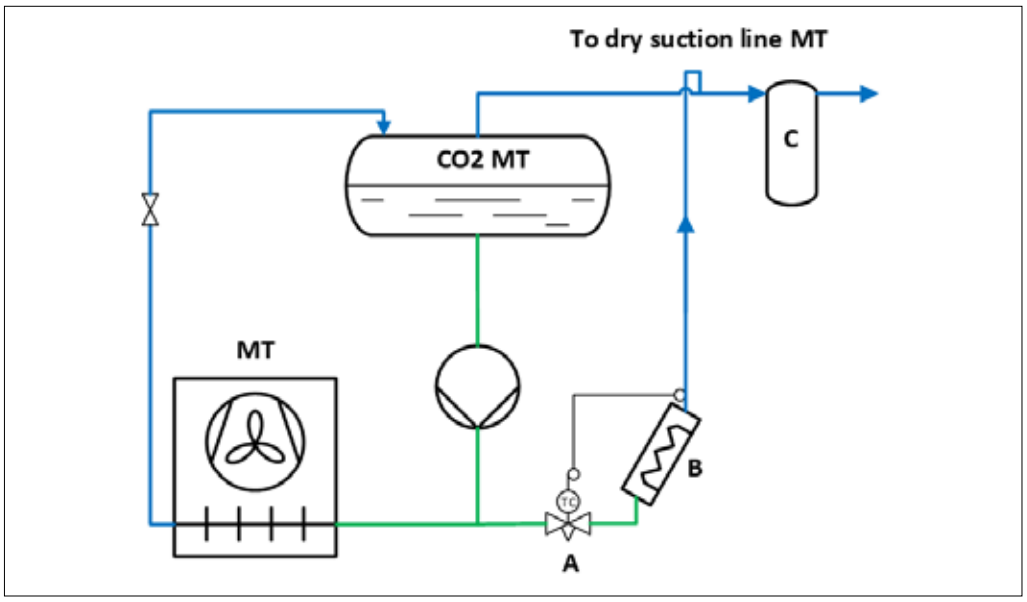

Figure 11.34: Principle of oil rectify- and return process in a pump-circulated CO_2 transcritical system on MT temperature and miscible oil

This is the same principle as described in chapter 6.3. The oil rectifier (B) essentially is a heat exchanger and boils off the oil-rich liquid CO_2 into CO_2 vapor and oil. In this example liquid is injected in the oil rectifier by means of an electronic expansion valve (A), superheat controlled. The pump pressure enables the needed pressure drop across the expansion valve. The CO_2 vapor/oil mixture is sent back to the MT dry suction line. For extra safety, a suction accumulator (C) can be used to catch liquid drops. In the return line from the oil rectifier, sufficient speed is needed to secure oil being moved up to the suction line. The principle of this is the same as in refrigerant risers. It is a possibility to run the oil rectifier with thermosyphon operation if a pump is not available.

In case the pump system only has an LT liquid separator, the principle of rectifying is the same. However if the CO_2/oil mixture is directly sent back to the LT suction lines, the LT compressors receive all of the collected oil, (included that lost from the MT/IT compressors) And as explained before, since the MT/IT compressors have a much higher oil carryover than the LT compressors, the LT compressor would get an overbalanced oil return, resulting in flooding. To overcome that, the rectified oil can be collected in an oil receiver after the oil rectifier and sent back to the parts of the system that need oil. Figure 11.35, shows a principle diagram of oil return from an LT liquid separator with miscible oil.

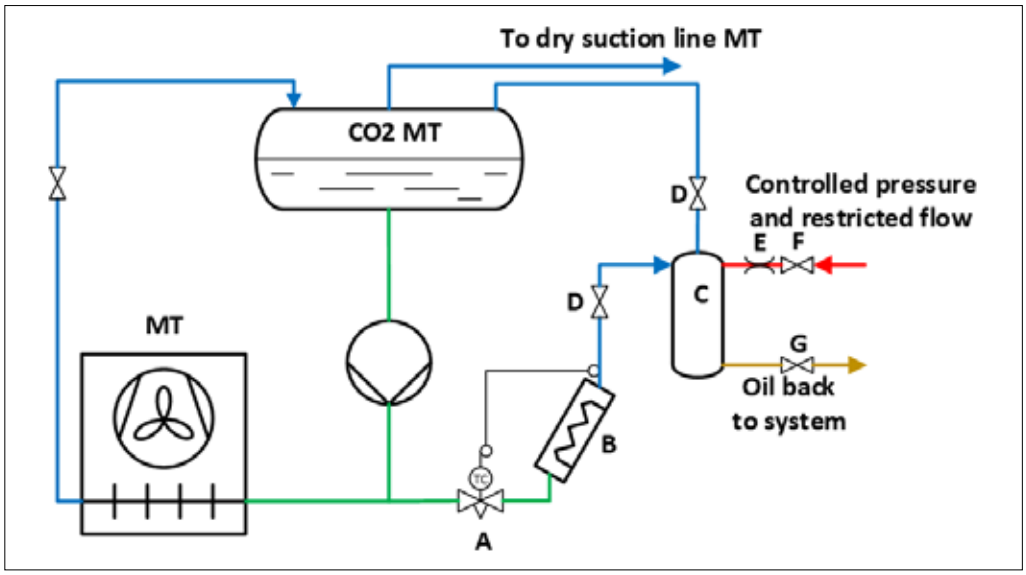

Figure 11.35: Principle of oil rectify- and return process in a pump-circulated CO_2 transcritical system on LT temperature and miscible oil

The rectifying process itself is the same as explained in Figure 11.34.

Valve A is regulating and the two valves D are in open position during the oil rectifying process. Valves F and G are closed. The liquid is in this example injected in the rectifier B) and the superheat is controlled by electronic expansion valve A. A mixture of CO_2 vapor and oil leaves the rectifier and enters an oil accumulator (C). CO_2 vapor leaves the oil accumulator and returns to the liquid separator, oil is separated from the CO_2 and accumulates at the bottom of the oil accumulator. When the oil rectifying process is done, valves D are closed.

Now the oil return process starts. The pressure in the oil accumulator should be slowly and safely increased to a pressure higher than the place where the oil has to be delivered to. Valve F is connected to a higher pressure CO_2 gas available in the system.

E represents a restriction so the pressurization is done slowly and safely. Valve G is connected to parts of the system that need oil. This could either be compressors or oil receivers, so the pressures where the oil needs to be sent to can be different.

It is unsafe and unnecessary to introduce a large flow of high pressure CO_2 gas to the oil accumulator. For that reason, the hot-gas supply lines should be well designed and flow restricted, e.g. with a fixed orifice (E). When the oil rectifying and oil return process is well balanced, it is a continuous repetitive process. So the oil flow and simultaneously the hot-gas flow, is of less importance as long as the timing of the oil return is well controlled and safe. The described process is just a simplified example. Other methods of oil rectifying or the oil return cycle are also possible. Pressure build-up in the system due to defective valves, trapped liquid or power cuts should of course be safeguarded against in the usual ways, ie with pressure relief valves. Generally oil collects in receivers where liquid enters and only vapor leave. In the case where a LT liquid is fed from a MT liquid separator, the LT separator would take the majority of the oil. While it is necessary to collect oil from the LT separator it is not necessary but could be beneficial to do this from the MT separator as well, the decision would be based on the distribution of capacity between LT and MT. In the case of a LT and a MT separator that are both fed with condenser liquid, both have only vapor leaving and both need oil collection.

© Danfoss | Climate Solutions | 2022.10

11.7.3 Oil rectifying and oil return in transcritical pump-circulating systems with immiscible oil

Oil rectifying in a pump-circulating system with immiscible oil works similar to a system with miscible oil, but the challenge is that the oil may collect at different levels in the separator. Depending on the oil type and temperature range this might be on top of the CO_2 liquid or on the bottom. Collecting this oil will be a matter of a device that can reach the different levels where the oil collects – usually a number of nozzles in the vessel. Which nozzle to use can be determined by the level if a level indicator is used, or it can simply be done by cycling through all collections points. After collection from on or more of these points, the collected oil can be handled as in the examples above.

11.7.4 Oil rectifying capacity and oil concentration

In order to boil off the oil-rich liquid CO_2, the oil rectifier capacity must be defined. The capacity depends on how much oil enters a system (LT or MT) and how much leaves. In the below equation, we look at the oil flow into and out of the LT separator being fed from the MT separator.

$$m_{in} \cdot ROPS_{MT} = m_{rectLT} \cdot ROPS_{LT}$$

m_{in} = total refrigerant flow into LT separator (kg/s)
$m_{rect.LT}$ = mass flow evaporated in LT rectifier (kg/s)
$ROPS_{LT}$ = Requested Oil Percentage Separator (%)
$ROPS_{MT}$ = Requested Oil Percentage Separator (%)

The left part of the equation is oil flow into the LT separator from the MT separator, specified by the refrigerant flow multiplied by the oil content (%) in the MT separator. The right side of the equation expresses the amount of oil being removed from the LT separator by the oil rectifier, expressed by the amount of refrigerant being boiled off in the rectifier (giving the rectifier capacity) and the oil content (%) in the LT separator. Rearranging this equation slightly gives an interesting insight into the dynamics of this problem.

$$m_{rectLT} = m_{in} \cdot ROPS_{MT} / ROPS_{LT}$$

Suppose the content in the MT separator is 0.1% and you want to keep 0.1% in the LT separator as well, then the simple math shows us that we need to evaporate all of the refrigerant flow into the LT separator in the oil rectifier. That leaves nothing for an actual cooling duty on the LT side, so that is hardly realistic. If we increase the LT oil content to 1%, then we need to evaporate 1/10 (= 10%) of the total LT flow in the oil rectifier.

The heat source of the oil rectifier is the subcooling of the liquid from the MT into the LT, so we can actually regain what is being boiled off in the oil rectifier as subcooling, making it more or less energy-neutral. However, there is a limit to how much heat we can extract from that flow. As an example of an MT temperature of -5 °C (23 °F) and an LT temperature of -30 °C (-22 °F), then we have a maximum (!) of 25K (45 °F) to sub-cool the liquid, and even getting all of the 25K (45 °F) will require an infinitely large oil rectifier. That energy content works out to around 20% of the total LT capacity available to the oil rectifier. With a smaller difference between MT and LT the % is lower, so realistically we can guess that we can put aside 10% of the LT capacity for the oil rectifier, making the oil content in the LT separator 10 times the oil content in the MT separator.

Applying the same rules for the content in the MT separator, we will also find that it is impossible to keep the oil content there below several times the content in the inlet flow, e.g. from the compressors, and that will cascade down to the LT separator. So ultimately the oil carryover from the compressors, together with the oil separator efficiency, is the most important issue to manage. In some commercial systems the oil carryover rate is around (or even above) 1%, but that is not a problem when you run DX as you will return the oil in the suction line immediately, and it will not accumulate in the evaporators. However, on flooded systems you will get into the problems mentioned above and, with insufficient handling, the oil content could be very high in the LT separator.

An oil content that is very high could hurt the heat transfer in the evaporators, as just one of the many issues this can bring with it. The OCR of the LT/MT and IT compressors differ from each other, however the average oil carryover will be close to that of the MT compressors. This is because they carry over much more oil than the LT compressors and obviously dominate in quantity in a transcritical systems. Assuming that both rectifiers are in operation and that the rectifier capacity of each separator is proportional in relation to its refrigeration capacity, this means that the requested oil percentage in the separator defines the oil rectifier capacity.

11.8 Heat recovery

When applying heat reclaim in subcritical refrigeration systems, there are certain limits that have to be considered. The primary limit of heat reclaim in subcritical systems is that the condensation temperature is constant, which sets a natural limit on how much heat can be reclaimed. Heat recovery systems for ammonia refrigeration systems are covered in chapter 9.5. When the CO_2 is cooled in the gas cooler under transcritical conditions, the temperature of the CO_2 changes during the 'phase change', as described in section 11.1.1. A low temperature difference can therefore be kept in the heat reclaim unit between the high-pressure CO_2 refrigerant and, for example, water for a hot water system. Therefore, it is possible to achieve very efficient heat reclaim from the gas cooler. However, one should consider the optimal condensation/gas cooler outlet temperature compared to the ambient temperature when doing heat recovery.

Heat reclaim feasibility

The economic feasibility of heat recovery should be considered beforehand. Very little heat can be recovered in cold periods, where the heating demand might be high and vice versa. Hot water systems, e.g. for cleaning-in-place systems, could be a utility for which heat reclaim can be economically feasible, if the demand for hot water is somewhat constant throughout the year. In the figures below, examples of temperature profiles are shown for heat reclaim in a transcritical CO_2 system and a subcritical CO_2 system.

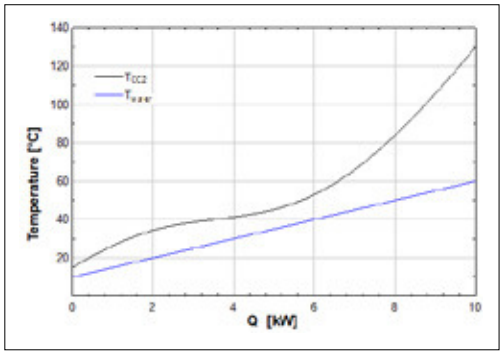

Figure 11.36: Heat reclaim in a transcritical CO_2 system

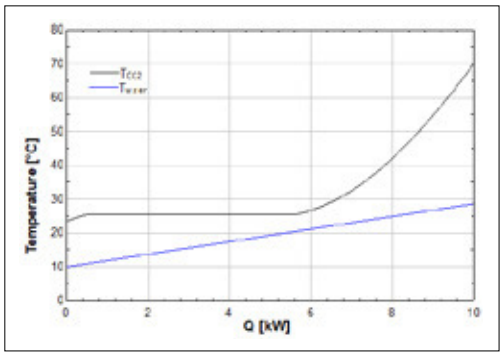

Figure 11.37: Heat reclaim in a subcritical CO_2 system

In both systems, water is supplied at 10 °C (50 °F) and 10 kW (2.86 TR) of heat is recovered. For both systems, a minimum temperature difference of 5 °C (9 °F) between the refrigerant and the water must be observed. The temperature glide in the transcritical system allows the water to be heated to 60 °C (140 °F). The constant temperature during condensation in the subcritical system limits the heat transfer to the water and the temperature of the water reaches 29 °C (84.2 °F) out of the de-superheater. For transcritical CO_2 systems, the discharge temperature of the gas from the compressors could be well above 120 °C (248 °F). With high discharge temperatures, there is a potential for heat recovery from the refrigeration system at the gas cooling pressure. In order to have an efficient heat reclaim, e.g. for hot water systems, the CO_2 gas needs to be cooled as much as possible. For hot water systems, this is possible by heating water from a tap water supply temperature of around 10 °C (50 °F), since the supply temperature of the water will set the 'target' outlet temperature of the CO_2 – the lower the water supply temperature, the lower the CO_2 outlet temperature – the more efficient the heat reclaim. However, the heat reclaim unit can not replace the gas cooler. The heat reclaimer should be installed in series upstream to the gas cooler so that the heat reclaimer can be used when there is a demand for hot water, for example. This demand can vary with the ambient temperature. Furthermore, ambient temperature can also determine whether the system is operated under transcritical conditions or under subcritical conditions.

11.8.1 System design

In general, all heat exchangers are placed in series to optimize the COP of the system by ensuring the lowest temperature out of the gas cooler. As many heat exchangers as are needed can be placed in series, but on most systems one or two heat exchangers for heat reclaim and one air-cooled gas cooler will be most commonly used. For the purpose of providing hot tap water, it is a good idea to make a system with two heat exchangers, since this will ensure the highest system efficiency. Figure 11.38 shows the principle of heat reclaim with two heat exchangers in series. In this chapter, for the sake of clarity, there will be one heat exchanger for heat reclaim and one air cooled gas cooler. But the control strategy will be the same as if more heat exchangers are needed.

© Danfoss | Climate Solutions | 2022.10

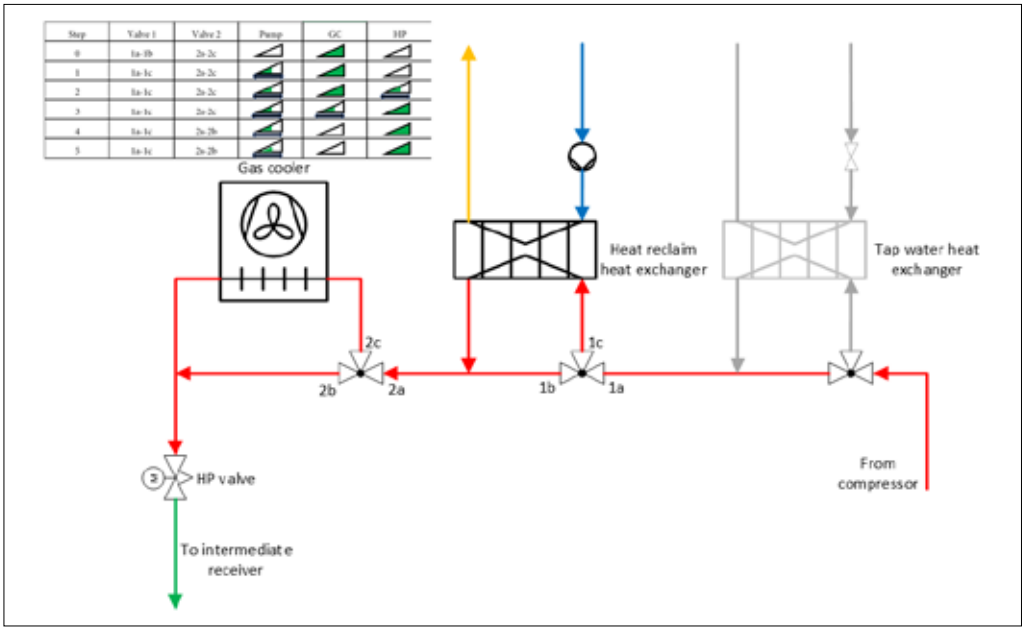

Figure 11.38: Principle of heat reclaim in a transcritical CO_2 refrigeration system

From the compressor, the hot gas enters the first 3-way valve in tap water mode, where highest temperatures are needed. In heat reclaim mode, the gas will go to the heat reclaim heat exchanger. In the heat reclaim heat exchanger, the gas is cooled down to as low a temperature as possible. The most common heat exchanger for heat reclaim is a tube-in-tube or plate heat exchanger. From the heat exchanger, the cold gas goes through the second 3-way valve. This valve directs the gas through the air-cooled gas cooler or bypasses it directly to the high-pressure expansion valve. In the gas cooler, the gas is cooled down further before it enters the high-pressure expansion valve. This is the basic setup. There can be many variations of it, but this is the most common and most widely used.

11.8.2 Control strategy

To meet the objective of reclaiming the heat needed, at the needed temperature as efficient as possible, the control strategy needs to cope with this. There are the following measures that can be used to do this.

- Pump speed on the secondary side
- High pressure increase
- Fan speed on the gas cooler
- By pass of gas cooler

The important thing is to use these measures in the right way to optimize the output of the system. The Danfoss strategy is to do this in 6 steps. The heat load on the heating system is feed back to the controller from the building management system or from a PI controller. To explain a typical Danfoss In the following description will be followed by a small example. The focus is on heat reclaim with the following basic data for the example:

- Ambient temperature 0 °C (32 °F)
- Water inlet temperature 25 °C (77 °F)
- Water outlet temperature 65 °C (149 °F)
- Exit temperature difference air cooled gas cooler subcritical 8 K (14.4 °F)
- Exit temperature difference air cooled gas cooler transcritical 2 K (3.6 °F)
- Exit temperature difference heat reclaim heat exchanger 5 K (9 °F)

Step 0

Normal cooling mode without any heat reclaim. If something goes wrong, step 0 will be used as a failsafe mode to avoid loss of goods. Cooling is always the first priority.

Step 1

The pump is turned on. There are different ways to control the pump speed, but normally the speed is controlled to maintain a fixed temperature out of the heat exchanger. However, temperature difference of the water or ingoing water temperature can also be used. All of them make sense in different systems. When the pump is at minimum speed and the flow switch in the water circuit is on and the temperature in the water circuit is below 95 °C (203 °F), the 3-way valve is turned to position 1a-1c. The pump speed is adjusted so that the temperature setpoint is satisfied. This will remove the part of the superheat with the highest temperature. If this is not enough to satisfy the heat load, the controller will be forced into step 2.

Step 2

The pump is still running according to the temperature, but the high pressure is pushed up to make a larger part of the heat available at the temperature needed. This is done by changing the reference setpoint in the high-pressure controller and thereby closing the high-pressure expansion valve. The higher pressure increases the compressor workload but also hugely increases the heating capacity. In step 2, the heat rejection in the air-cooled gas cooler is still a big part of the system's total heat rejection. By increasing the pressure, the part of the heat rejection that can be reclaimed increases and at the same time the discharge temperature increases. However, at some point it is no longer efficient to raise the pressure higher. The compressor workload would be too high and the reclaimed heat would not increase at the same rate.

Step 3

The reference setpoint for the gas cooler fans is gradually increased up to the optimum COP, causing that at low ambient temperature conditions the fans stop. This causes the heat rejection from the air-cooled gas cooler to decrease. This will result in a loss of cooling capacity, but the system will compensate by putting in more compressor capacity. This will also result in a higher compressor workload, but also more capacity in the heat reclaim system. Even when the fans are stopped, the natural convection of the gas cooler is enough to take some capacity out of the system. By reducing the condenser fan speed, the capacity is reduced. Therefore, the part of the heat reclaimed increases, and the part rejected to the ambient air decreases.

Step 4

The air-cooled gas cooler is bypassed to avoid natural convection and thereby heat rejection from this part of the system. As in step 3, this reduces the cooling capacity, but the system will compensate by putting in more compressor capacity. This will also result in a higher compressor workload, but also more capacity in the heat reclaim system. At this point, no heat is rejected to the ambient air and the system is basically running as a heat pump system but with the control sensor on the low-temperature side. By bypassing the gas cooler, all heat rejected from the system must go into the heat reclaim system.

Step 5

In step 4, all heat put into the system is reclaimed. If the heating demand is still not satisfied, the load on the cold side of the system needs to be higher. This can be done by adding an extra evaporator that takes heat from the ambient air. The efficiency of this is lower than the other steps, but it represents an easy solution for getting more heat. The efficiency should be looked at on a yearly basis, because the number of hours running in step 5 should be taken into account.

11.8.3 Features and challenges

Some aspects of heat reclaim in a transcritical system are different from conventional systems and they need to be addressed and handled.

11.8.3.1 Condensing in the heat-reclaim heat exchanger

Since it is possible to do a partial reclaim, the CO_2 can be partially condensed in the heat-reclaim heat exchanger. When using more than one heat exchanger, the problems grow accordingly, and the strategy becomes slightly more complex to prevent the various problems that may occur. One problem that may occur is that the liquid can build up in one part of the system, and then, due to the gas pressure, is pushed out into the system at high velocity, possibly causing severe damage to parts of the system.

This problem can be handled in many ways.

The system can be forced into transcritical mode when there is a need for heat reclaim. This will reduce the efficiency of the system, but the operation is safe because there is only one phase.

The inlet water temperature can be kept high enough (maybe 30 °C (86 °F)) to ensure it is not possible to condense. This will not force the system to run transcritical, but will still reduce the efficiency. This control strategy can be implemented with a mixing loop on the water side.

The pressure in the system can be controlled in such a way that the superheat out of the heat-reclaim heat exchanger is kept high enough to ensure condensation does not occur. This is a safe and the most efficient way to control the process.

Ensure that the temperature between various heat exchangers is at an appropriate level.

Physically mount the heat exchangers and route the piping to ensure that any liquid created will not accumulate and is transported to the next heat exchanger safely. This generally means downwards flow without pockets.

In some system designs, condensation is not a problem, but this needs to be considered in the system design.

© Danfoss | Climate Solutions | 2022.10

11.8.3.2 Temperature protection

Since the temperature of the compressor discharge gas can be very high, measures must be taken to avoid boiling of water in the water circuit of the heat reclaim heat exchanger.

11.8.4 Conclusion

Heat reclaim in a transcritical system can be attractive. Compared to HFC systems, the efficiency is higher and the temperatures that can be obtained are higher compared to HFC technology. It has been shown that it is possible for correctly designed systems, where the heat demand is not high, to eliminate additional heat sources. This makes heat reclaim a very interesting option when looking at total costs.

11.9 Design pressure and safety

Close attention should be paid to precautions and considerations when working with transcritical CO_2 systems, due to the increased pressure levels in these systems. A CO_2 transcritical pump circulation system has different working pressures depending on the system part. The variation can be wide. CO_2 at saturated freezing temperatures of -50 °C (-58 °F) correspond to 6.8 bar(a) (89.6 psi). However, the transcritical discharge part is typically designed for 140 bar (2030 psi). For practical and economic reasons, the system is divided into zones which each have their specific design pressure. An example of such design pressure levels for transcritical CO_2 systems are shown in Figure 11.39 but can differ from system to system for design reasons, size of the liquid separators and the actual LT/MT evaporating temperatures.

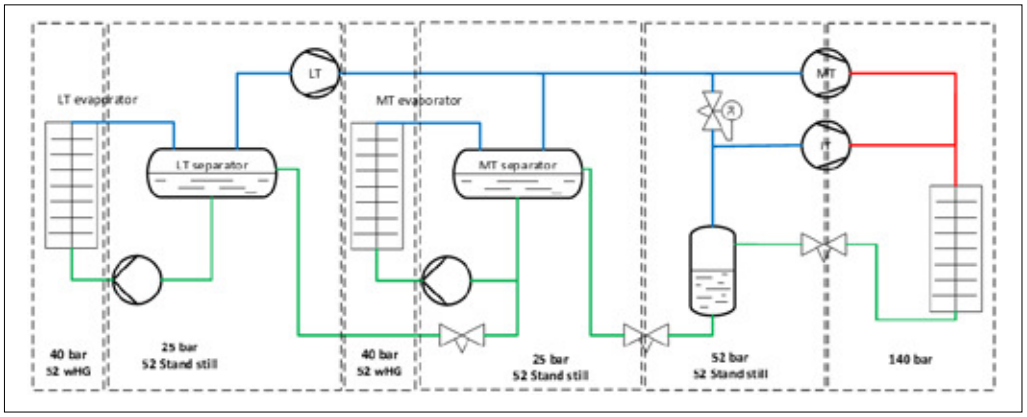

Figure 11.39: Typical design pressures in an industrial CO_2 transcritical pump circulation system

In this case, we typically see 6 zones: LT and MT evaporator zones, LT and MT separator zones, intermediate pressure zone, and finally, the transcritical zone. For the LT and MT evaporator zones, the design pressure can be defined by looking at the evaporation temperatures. In that case, 40 bar (580 psi) should be sufficient. However, when hot-gas defrost is applied, a design pressure of 52 bar (754 psi) is needed. The design pressures for the separator zones are defined by the required working pressure of the separators. The intermediate working design pressures are 52/65 bar (754/943 psi). Standstill pressures in large industrial systems are typically lower than in smaller commercial systems because of the relatively large receiver volumes. The Danfoss Industrial series of Flexline valves have a PS of 52 bar (754 psi). For a PS of 65 bar (943 psi), please contact Danfoss).

General safety topics related to CO_2 are described in chapters 10.4 to 10.7.

12. Heat exchangers

Heat exchangers perform the primary duties of the refrigeration/heat pump systems – heating and cooling – as well as several internal functions.

For efficient operation of heat exchangers, it is necessary that the system is both designed, constructed and controlled appropriately.

Figure 12.1 below shows the heat exchangers that are normally used in a single-stage system. Note that not all are necessary and that the heat exchangers numbers (7) to (9) are not often all used at the same time. Likewise, it is not normal to use all types of evaporators – thermosyphon (1), pumped (2) and DX (3) – in the same system. These variations are included here to illustrate all possible variations. All valves except expansion are omitted for clarity.

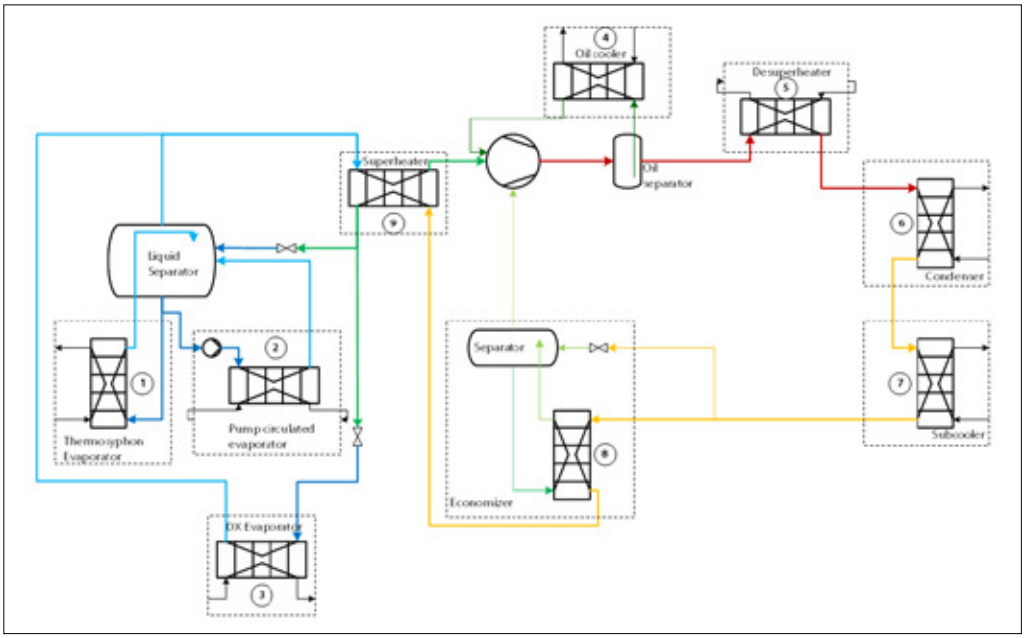

Figure 12.1: Overview of the most common heat exchangers in a refrigeration system

Thermosyphon evaporator: This type is a 'flooded evaporator', signifying that more refrigerant is circulated than evaporated. Because of this, the exit flow is a mixture of vapour and liquid and it is therefore returned to a separator to ensure a dry suction gas is fed to the compressor. The thermosyphon evaporator is fed with liquid through natural circulation.

Pumped evaporator: This type is also a 'flooded evaporator', but in comparison with the thermosyphon, it uses a pump to feed liquid to the evaporator. These are very often air coolers located in such a way that thermosyphon operation is not possible (e.g. far away from the compressor/separator, for instance in a cold store or a freezing tunnel). Plate freezers are another common type of pumped evaporator.

DX evaporator: DX is an abbreviation for 'Direct expansion', signifying that the evaporator is fed with high-pressure liquid through an expansion valve. The control of the expansion valve ensures that the refrigerant return from the evaporator is fully evaporated, e.g. with no liquid in it, and, as such, it can be passed directly to the compressor.

Oil cooler: Screw compressors require oil cooling and the oil cooler performs this task. Oil coolers can be glycol/water-cooled (as shown here) or thermosyphon oil coolers (not shown) that evaporate liquid from the condenser to cool the oil. Evaporated liquid is returned to the compressor discharge line before the condenser to be re-condensed. Water/brine-cooled oil coolers are often part of a heat recovery system or heat pumps.

De-superheater: The de-superheater cools discharge gas from the compressor before entry into the condenser, usually for use in a heat recovery system or heat pump. The higher temperatures in the de superheater enable a higher heat recovery temperature than is possible in the condenser.

Condenser: The condenser cools the compressor discharge gas and condenses it into liquid. Condensers can be evaporative condensers (not shown), air-cooled condensers (not shown) or a glycol/water-cooled heat exchanger as shown here. The heat delivered to the glycol/water circuit can either be dispersed by a cooling tower or used in a heat recovery system / heat pump.

Subcooler: The subcooler cools the condensed liquid further using water/glycol or possibly air. With a colder liquid being passed to the low-pressure side, the compressor capacity increases. Subcoolers are often part of a heat recovery / heat pump system.

Economizer: Screw compressors usually have an additional port, the economizer port, that allows refrigerant to be fed in after the compression has started. As such, it can be used to compress

© Danfoss | Climate Solutions | 2022.10

additional refrigerant at a starting pressure above the evaporating pressure, without compromising the compressor's capacity at evaporating pressure. Generally, two different economizer types exist – the 'open' economizer (not shown) and the 'closed' economizer.
The open economizer is a simple vessel without heat exchangers, so it will not be covered here. The economizer cools the condensed liquid further, increasing the compressor capacity in the same way as a subcooler. The cooling is performed by flashing and evaporating some of the condenser liquid and this vapour is passed to the compressor's economizer port. In the closed economizer, a heat exchanger performs the cooling duty.

Superheater: Sometimes called a Suction Superheater. This heat exchanger heats the suction gas to the compressor to ensure that no liquid is fed to the compressor. As a heat source, the condenser liquid is used. Since the superheating of the compressor's suction gas decreases the gas density, the compressor mass flow drops, but the subcooling of the condenser liquid compensates for this. Depending on the refrigerant and operating conditions, it can result in a total change in capacity – either positive or negative – but usually it is very close to break-even.

For the sake of clarity, four noteworthy additions to the above diagram were not added.

Side load: It is not unusual to add an evaporator to an economizer, allowing external cooling to be performed at an additional (higher than evaporating temperature) temperature level. This is often referred to as 'side load'.

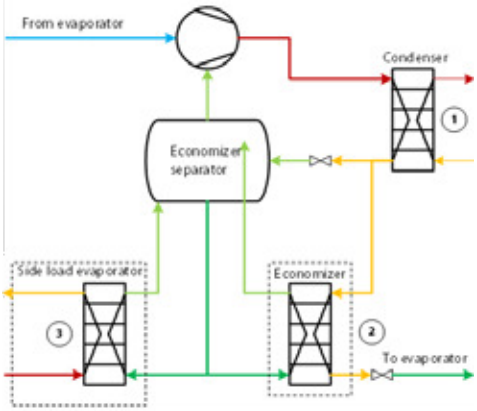

Figure 12.2: Side load evaporator

In the above sketch in Figure 12.2, a thermo-syphon evaporator (3) has been added to the economizer (2) which here is mounted directly after the condenser (1). For all practical purposes, this evaporator can be treated as a normal thermosyphon evaporator. Pumped operation from the economizer is also an option.

Intercooler: On two-stage systems, an intercooler (also known as an interstage cooler) cools the discharge gas from the low-stage compressor before entry into the high-stage compressor. If not cooled, the high temperature of the suction gas to the high-stage compressor will result in an excessively) high discharge temperature for this compressor. The cooling of the gas is often performed by bubbling it through a liquid bath, thereby cooling it to (near) saturation. In much the same way as the economizers, the intercooler can be 'open' or 'closed', where the open type does not involve a heat exchanger. A closed intercooler is shown in Figure 12.3 below.

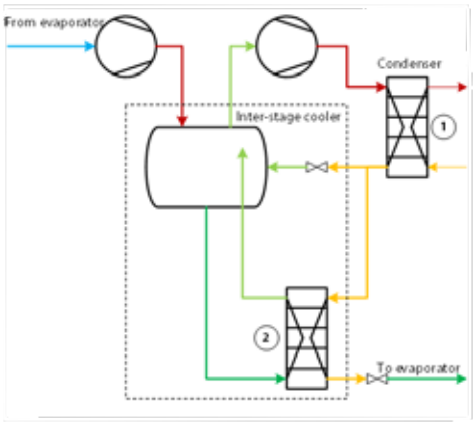

Figure 12.3: Inter-stage cooler

The intercooler takes refrigerant liquid from the condenser (1) and cools it further in the intercooler heat exchanger (2), using condenser liquid flashed to the vessel. Note that the flashed liquid is also used to de-superheat the low-stage compressor discharge gas, by bubbling it through a liquid bath. Other possible ways to de-superheat the discharge gas is injection of liquid into the low-pressure compressor's discharge pipe or in a heat exchanger with external cooling. The former method must be controlled carefully to avoid having liquid in the suction of the high-stage compressor. Generally, the bubbling method is the most common.

In much the same way as on the economizer, a heat exchanger can be added to provide a refrigeration duty at the interstage pressure (not shown), either through thermosyphon operation or pumped operation. Alternatively, a separator can be added in parallel with the intercooler.

Cascade cooler: A cascade cooler is the connection between the two refrigerant circuits in a cascade system. Typically, the low temperature refrigerant will be R744 (CO_2), while the high temperature refrigerant is R717. The cascade cooler condenses R744. The cooling for this process is provided by evaporating R717 at a temperature below the R744 condensing temperature.

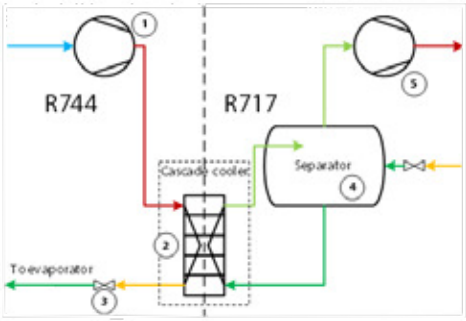

Figure 12.4: Cascade cooler

In Figure 12.4 above, the R744 compressor (1) discharge gas is condensed in the cascade cooler (2) and flashed back to evaporating temperature by the R744 expansion valve (3) (possibly after storage in a receiver). On the R717 side, the cascade cooler is used as a thermosyphon evaporator with a liquid separator (4). From the separator, the vapour created is compressed by the R717 compressor (5).

Typically, R744 is condensed at -10 °C (14 °F) and R717 evaporates at -15 °C (5 °F).

The temperature difference in the cascade cooler can be considered an efficiency loss, so it is recommended to examine the change in operating cost (compressor power) versus the installation cost of a larger cascade cooler that operates at, for instance, a 3 °C (5.4 °F) temperature difference.

Intermediate circuit: Finally, it is not uncommon to have an intermediate circuits between the evaporator and a product.

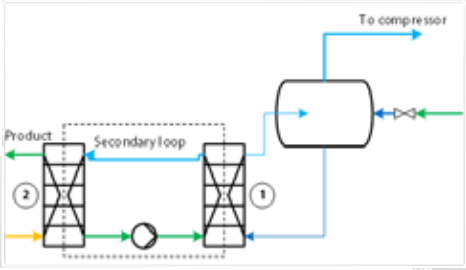

Figure 12.5: Secondary loop/brine loop

In case of a leak in the evaporator (1), refrigerant may contaminate the secondary side. If the secondary side is a product such as beer or milk, the product will be destroyed. Thus, the product is cooled in a secondary heat exchanger (2), which is cooled by the water/glycol cooled by the evaporator (1). In this way, product safety is ensured.

© Danfoss | Climate Solutions | 2022.10

12.1 Heat transfer fundamentals

Heat exchangers utilize differences in temperature to move heat. Two fluid flows are brought into close contact on either side of a wall or a pipe, allowing energy – in the form of heat – to travel through the wall or pipe from the hot side to the cold side. The heat exchanged (gain or loss) leads to changes in the media on either side. In the case of a single phase (liquid or vapour) it leads to a temperature change. In evaporators, the heat exchanged leads to refrigerant liquid being evaporated, and in condensers, the heat exchanged leads to refrigerant vapour being condensed.

Generally, the capacity of a heat exchanger can be expressed by:

$$Q = U \cdot A \cdot \Delta T$$

Where:

Q	is the capacity (W or BTU/hr)
U	is the overall heat transfer coefficient ($W/(m^2K)$ or BTU/ft^2 F hr)
A	is the heat transfer area (m^2 or ft^2)
ΔT	is the temperature difference (K, °C or F)

Heat transfer types in heat exchangers

In heat exchangers for refrigeration systems, heat is typically transferred from gas/vapour or air to a liquid refrigerant or phase-changing refrigerant, or the other way around. Two types of heat transfer are experienced in this case:

Conduction: When heat is transferred through a solid material, e.g. through the wall of a metal pipe, or when heat is transferred between two solid materials through contact, e.g. in plate freezers.

Convection: When heat is transferred between a liquid, gas, or phase-changing refrigerant and a solid material, e.g. when evaporating refrigerant flow through the evaporator pipes, and heat is transferred from the pipe wall to the evaporating refrigerant.

Heat transfer coefficient - U

The overall heat transfer coefficient, U, describes how well heat is transferred in the heat exchanger. The overall heat transfer coefficient depends on the flow properties for the heated media and the cooled media in the heat exchanger, the wall/pipe size and its thermal conductivity (k-value) as well as factors like fouling (dirty surfaces).

For single-phase flows (water, glycol, vapour or liquid refrigerant), the heat transfer coefficient depends on the fluid properties, which are usually a given factor, and the velocity of the fluid in the heat exchanger. A higher velocity gives a higher heat transfer coefficient, but it also results in a higher pressure loss. Liquid flows usually have the highest heat transfer coefficients.

For evaporation, the heat transfer coefficient depends on the properties of the refrigerant as well as the heat flux (W/m2 (BTU/ft2 hr)) and operation method (flooded, DX) and various parameters such as circulation rate or superheat. For condensation, it is much the same, albeit with different parameters. Often, there is not much a designer of heat exchangers can do about evaporation and condensation heat transfer coefficients.

Fouling is a value given by the designer that expresses the dirt, oil etc. that adds resistance to the heat transfer. This value is very much an experience-based value, with the actual value depending on the type of fluid, such as clean water versus river or sewage water – the latter requiring a much higher fouling than the former. Oil contamination of refrigerants is also a source of fouling. Fouling is usually stated for each side of the heat exchanger.

Finally, the properties of the wall between the two sides are usually given by the actual heat exchanger through the materials and the geometry selected.

All of these factors combine to form the total heat transfer coefficient. It is noteworthy that it is the side with the lowest heat transfer coefficient (which is the largest resistance to heat transfer) which dominates the total heat transfer coefficient. For instance, an evaporator with very low speed on the water/glycol side will have a low heat transfer coefficient on that side, so the evaporative side can basically be very high without any significant difference to the overall heat transfer coefficient.

Heat transfer surface - A

The heat transfer area is not always as simple as it sounds. In many heat exchangers the surface available to the two sides are not the same. For instance, in shell-and-tube heat exchangers, the pipe surface inside and outside is not the same due to the difference in diameter (wall thickness) or the use of 'extended surface', e.g. fins. This is a factor that affects the overall heat transfer coefficient and it is important (when programming the calculation tool) to ensure that the area used is in accordance with the correction to the overall heat transfer coefficient. In cases such as plate heat exchangers, the area is the same on both sides and thus presents few problems when it comes to calculation.

Typically, a total heat transfer rate, U*A given in (W/K), is calculated based on the individual contribution from each heat transfer type's U-value and corresponding heat transfer area, A.

Temperature difference - ΔT

The temperature difference is the driving force for a heat exchanger, as the heat flows from the hot side to the cold side. However, as the temperatures of the flows change, it is not always apparent what the temperature difference is at a given point.

An example: Two water flows enter a heat exchanger from the same side with the temperatures 70 °C (158 °F) and 10 °C (50 °F) respectively. The hot water flow has twice the volume flow rate of the cold-water flow.
The figure below shows the temperature on the y-axis (vertical axis) and the relative path travelled by the flow through the heat exchanger in %, thus 0% is the inlet, 50% is half way and 100% is the outlet.

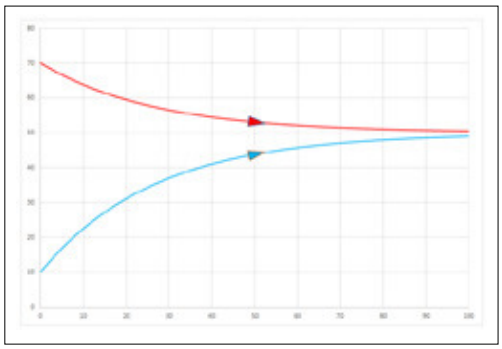

Figure 12.1.1: Temperature profile for co-current heat exchanger

Since the hot water flow rate is twice the flow rate of the cold water, an equilibrium temperature of 50 °C (122 °F) would be achieved if the flows were mixed. It can be seen from Figure 12.1.1 that the flows approach 50 °C (122 °F) at the outlet. The rate of temperature change for the flows through the heat exchanger should be noted. At the inlet, the heat transfer is high, as the temperature changes a lot. As the flows is heated/cooled, the temperature difference decreases, and the heat transfer is reduced. At the outlet, the flows are almost at the same temperature, but the temperatures change very little from about 80% until the outlet, due to the very low heat transfer at the small temperature difference. If the heat exchanger were infinitively large (A = ∞), the temperatures of the flows would reach 50 °C (122 °F).

This figure above illustrates the problem of determining what the actual temperature difference is, since the difference varies from 60 °C (108 °F) at the inlet to 1.5 °C (2.7 °F) at the outlet. The solution is to use a 'logarithmic mean temperature difference' (LMTD) that compensates for the changes in temperature. The LMTD is calculated as follows:

$$LMTD = \frac{(\Delta T_{inlet})-(\Delta T_{outlet})}{ln((\Delta T_{inlet})/(\Delta T_{outlet}))}$$

Where ΔTs represent the temperature differences on either end of the heat exchanger. Using this, the LMTD is calculated to be 15.86 °C (28.55 °F).

12.1.1 Co-current vs counter-current

Co-current and counter-current are terms that refer to the direction of the flows in a heat exchanger relative to one another.

Co-current: A co-current flow heat exchanger has the hot and cold flow to flow in the same direction. The figure above is a co-current heat exchanger. By having the flows in the same direction, a high heat transfer is achieved around the inlet of the heat exchanger. However, for a co-current heat exchanger, the hot-side flow cannot be cooled below the outlet temperature of the cold-side flow and vice versa, the cold-side flow cannot be heated above the outlet temperature of the hot-side flow.

Counter-current: A counter-current flow heat exchanger has the ho~~t and cold flow flo~~w in opposite directions, such that the cold-side inlet is placed at the hot-side outlet. A counter-current heat exchanger can cool the hot side below the cold-side outlet, since the hot-side outlet transfers heat to the cold-side inlet and vice versa.

The figure below shows the same example as before but with a counter-current heat exchanger instead of a co-current. It is seen that the temperature drop for the hot side is 25 °C (45 °F), whereas it was 20 °C (36 °F) for the co-current. This means that more heat has been transferred in this situation, with the result that the counter-current heat exchanger is more efficient than the co-current, and thus the counter-current has the highest capacity.

© Danfoss | Climate Solutions | 2022.10

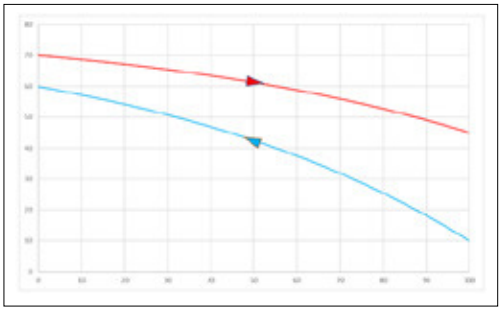

Figure 12.1.2: Temperature profile counter-current heat exchanger

In this case, the cold stream can be heated to 60 °C (140 °F) and the hot stream can be cooled to 45 °C (113 °F). All other parameters are the same. The difference is that the LMTD is higher at 20.0 °C (36 °F), some 25% of which is directly reflected in the capacity as well. As a conclusion, the counter-flow heat exchanger is much more efficient than a co-current.

Visually the difference in LMTD can be seen as the area between the two curves. Although the co-current starts out with a high temperature difference, it drops quickly to near zero, while the counter-current maintains a large difference throughout the whole heat exchanger.

12.1.2 Pinch point

The pinch point is the point in the heat exchanger where the temperature difference is at the minimum. This means that the pinch point is the limiting factor to the heat exchanger regarding capacity. For the two examples shown above, the co-current heat exchanger in Figure # has a pinch point temperature difference of 1.5 °C (2.7 °F), while for the counter-current heat exchanger it is 10 °C (18 °F). An excessively high pinch-point temperature difference is not desirable, since this means that the heat exchanger is too large, and its capacity is not utilized optimally.

The pinch-point temperature difference is a parameter that is typically investigated when dimensioning a heat exchanger to optimize the performance. Typically, it is a trade-off between efficiency, cost and capacity.

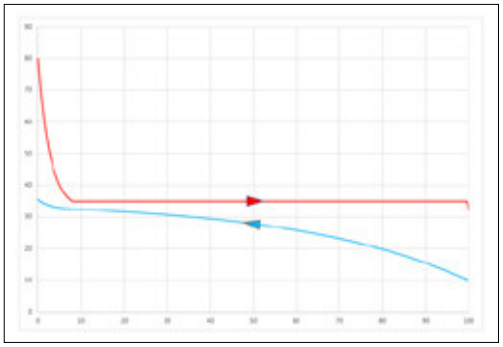

Figure 12.1.3: Temperature profile for condenser

12.1.3 Condensers

In a heat exchanger with phase change, it is a little more complex. During the phase change the refrigerant will remain at a constant temperature, or constant temperature glide (slope) for refrigerant mixtures, when the phase change takes place. Below is a sketch of condensing ammonia in a heat exchanger. The ammonia enters the heat exchanger at the compressor's discharge temperature, which has been set to 80 °C (176 °F) in this example. The gas is cooled until it reaches the saturation temperature – here 35 °C (95 °F) – where condensing begins. As long as condensation takes place, the temperature remains at the saturation temperature. At the end, all is condensed and a little subcooling takes place. On the water side, the water enters at 10 °C (50 °F) and is heated to near the condensing temperature with a gradually decreasing capacity as the temperature difference decreases. Before the end, the water enters the area where the hot discharge gas is cooled, and the water gets a little boost from the increasing temperature difference.

But the diagram illustrates a key point in condenser design. Looking at the refrigerant inlet temperature (80 °C (176 °F)), it would be easy to hope for a water exit temperature of perhaps 60 °C (140 °F), which would be very welcome in heat recovery systems or heat pumps. However, at the start of the condensation process – at around 8% on the diagram – the water temperature is very close to the condensing temperature. This is the pinch point where the temperatures in the heat exchanger limit performance.

The water temperature increases approximately 25 °C (77 °F) in the condenser sample, but if a 60 °C (140 °F) water outlet temperature was desired, e.g. a 50 °C (154 °F) increase, it would be intuitive to lower the water flow to half. However, that results in the below temperature profile shown in Figure 12.1.4:

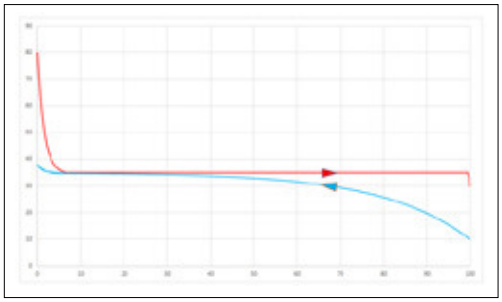

Figure 12.1.4: Temperature profile for condenser at half water flow

Clearly the water temperature approaches the condensing temperature more rapidly, but it is unable to heat further since the temperature difference drops to nearly zero.

Since the temperature difference between 8% and 30% of the path is approximately 0, there is effectively no heat transfer from the ammonia to the water in that part of the heat exchanger.

As the water stream enters the de-superheating zone, it heats to around 38 °C (100 °F). Hotter than before, but with half flow. As a result, the condensing capacity is reduced to around 55% of the previous example. The pinch point has limited the heat transfer in a large part of the condenser – which is essentially wasted.

The conclusion is that the overall LMTD – which focuses on inlet and outlet temperature differences – is not sufficient to describe the actual situation. Using the inlet and outlet temperatures, the LMTD is calculated to 29.76 °C (53.6 °F) (for the first condensing example). However, if the heat exchanger is split into sections according to the 3 different situations on the condensing side, a more precise LMTD can be calculated using the LMTD for each section. In the de-superheating section, the LMTD is 7.77 °C (14 °F), in the condensing section 4.98 °C (9 °F) and in the subcooling section it is 22.09 °C (39.76 °F). Since the de-superheating accounts for 11.3% of the total capacity, the condensing 86.4% and the subcooling 2.4%, a weighted LMTD scaled according to this is 5.70 °C (10.26 °F), which is approximately 20% of the overall calculation. Another way of weighing the LMTD is by the area used by the different sub-processes.

It can be noted that the de-superheating duty – which is 11% of the total capacity in this example – requires around 8% of the total area. This is due to the higher LMTD in this area. In this example, which focuses on temperatures, the heat transfer coefficient has been set to a constant value. In real life, the heat transfer coefficient of the de-superheating – which is simple gas cooling – is much less than in the condensing and subcooling zones, so the area used for de-superheating would need to be somewhat larger.

12.1.4 Evaporators

In a flooded evaporator, the evaporating side temperature is constant throughout the heat exchanger. With this simple behaviour of both sides, the overall LMTD gives a sufficiently good picture of the temperature difference. Note that, from a temperature perspective, it does not matter if the refrigerant and brine flow in the same or opposite directions, however it is the norm to have the flows in the same direction to 'kick-start' the evaporation with the largest possible temperature difference.

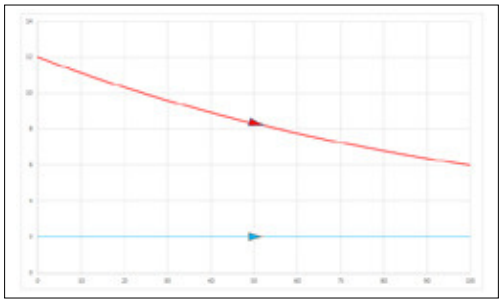

Figure 12.1.5: Temperature profile for flooded evaporator

© Danfoss | Climate Solutions | 2022.10

However, in a direct expansion (DX) evaporator, the evaporating temperature remains constant until all refrigerant is evaporated and then the gas is superheated to the outlet temperature.

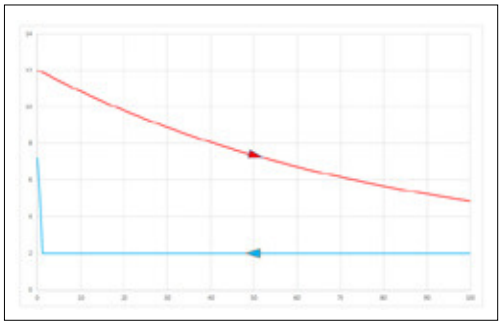

Figure 12.1.6: Temperature profile for DX evaporator

Again, a simple LMTD consideration from the in/outlet temperatures does not show the real situation. Using these temperatures, the LMTD is 3.75 °C (6.75 °F), while doing a split similar to the condenser example, the weighted LMTD is 5.70 °C (10.26 °F) – approximately 50% higher.

Like the 'pinch-point' problem in the condenser, the creation of superheat in the evaporator can be a problem if the temperatures are too close. It is clear that the hot side outlet temperature cannot go below the evaporating temperature, but it is also necessary to have sufficient temperature difference in the inlet end to create superheat. A sufficiently large superheat is essential for ensuring that the refrigerant flow to the compressor is always without liquid. Normally superheat is in the range 5 to 10 °C (9 to 18 °F). In the temperature profile shown below in Figure 12.1.7, the DX evaporator from the previous example has had its evaporating temperature raised from 2 °C (35.6 °F) to 6 °C (42.8 °F).

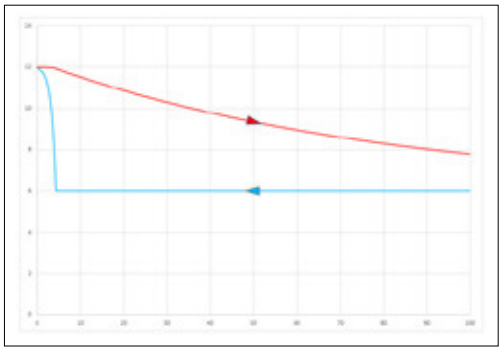

Figure 12.1.7: Temperature profile for DX evaporator with higher evaporation temperature

Clearly the evaporator has difficulties in creating superheat and, as such, is not safe.

These are the basic operations of heat exchangers, but many variations exist. Cross flow is where the two fluids are neither co- nor counter-current but rather perpendicular to each other. Similarly, heat exchangers can have several 'passes' on one or both sides, where the flows change direction. These variations require a careful application of LMTD functions to adequately express the real temperature difference, however this is not covered here.

12.1.5 Limitations to heat exchangers

As mentioned, the heat transfer is composed of 3 parts – heat transfer on the refrigerant side (left), heat transfer through the wall (center) and heat transfer on the water side (right). Fouling is ignored in this example.

Apart from the above temperature difference-related limitations, a couple of other issues need to be addressed to ensure safe and efficient operation of a heat exchanger.

Freezing of the brine/water is the biggest risk, as it has the potential to destroy the heat exchanger. As water expands when it freezes, the forces released from this are sufficient to break the metal of the heat exchanger.

Considering an application where it is desired to cool water to +2 °C (35.6 °F) using a refrigerant that evaporates at -2 °C (28.4 °F), the temperatures involved could, as an example, be as shown in Figure 12.1.8 below.

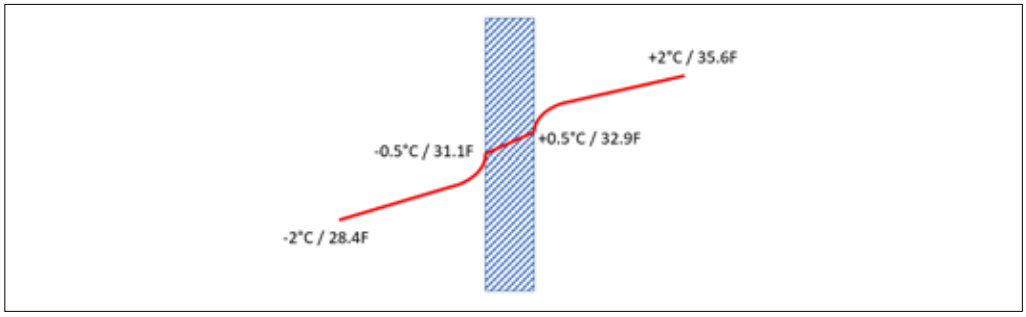

Figure 12.1.8: Temperature profile across wall in heat exchanger with 4 °C (7.2 °F) temperature difference

Any heat transfer needs a temperature difference as a driving force, so the wall temperature on the water side is lower than the water bulk temperature, the wall temperature on the refrigerant side is lower than on the water side and finally the refrigerant (evaporating) temperature is lower than the wall temperature on the refrigerant side. The actual temperature differences can be calculated from the heat transfer coefficient on the two fluid sides and the heat conductivity and wall thickness in the wall. The values given here are just to provide an example.

The all-important value is the wall temperature on the water side, which here is at +0.5 °C (32.9 °F) – above but close to freezing.

It would be tempting to run with a lower evaporating temperature, since the larger temperature difference would mean a smaller – and cheaper – heat exchanger. However, the lower evaporating temperature shifts the wall temperatures on both sides.

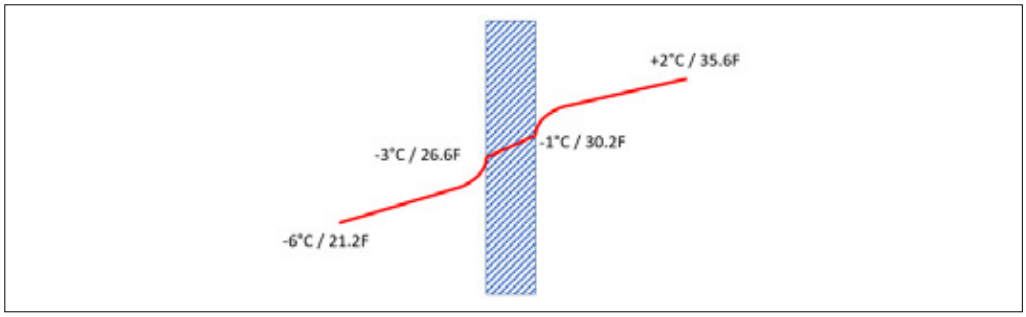

Figure 12.1.9: Temperature profile across wall in heat exchanger with 8 °C (14.4 °F) temperature difference

In Figure 12.1.9 above, the temperature difference from evaporating to water outlet temperature has been doubled from 4 °C to 8 °C (7.2 to 14.4 °F). With the assumption that the heat transfer coefficients are constant, this effectively doubles all temperature differences. Consequently, the wall temperature on the water side is now -1 °C (30.2 °F) and the heat exchanger will certainly freeze.

12.2 Plate heat exchangers

Plate heat exchangers consist of layers of metal plates. The metal plates are designed as corrugated plates to create small channels between each plate, which make plate heat exchangers very efficient compared to other heat exchanger types, since a larger surface area for heat transfer is obtained.

The channels on a plate are typically formed as fishbone shapes. The angle of the fishbone, the chevron angle or corrugation angle, is an important design parameter for a plate along with the depth of the corrugations. They determine the length of the path inside a channel that the fluid must travel. The channel and path lengths determine the pressure drop and the heat transfer capacity of the plate heat exchanger. A fish-bone plate is shown in Figure 12.2.1.

© Danfoss | Climate Solutions | 2022.10

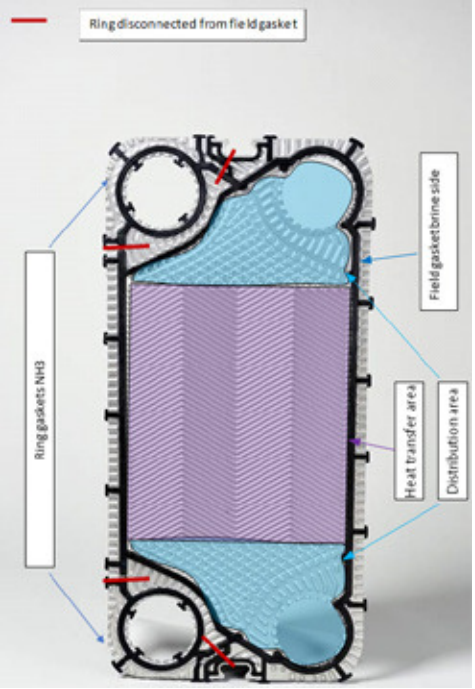

Figure 12.2.1: A fishbone plate for a plate heat exchanger

If the corrugation angle is small, the plate is referred to as a long plate, since the flow path is long, and a large corrugation angle yields a short flow path, and the plate is referred to as a short plate. The flow path for a long and a short plate is shown in Figure 12.2.2.

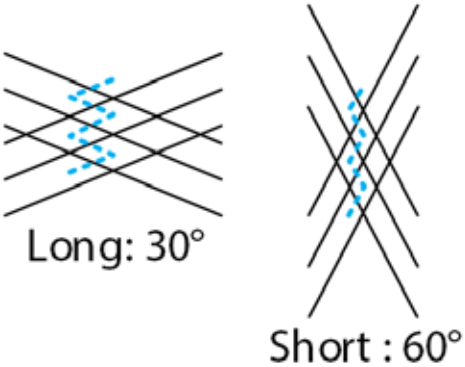

Figure 12.2.2: Flow path for a long and short plate

A long flow path on the long plate gives a high heat transfer rate with a high penalty of a high pressure drop due to the length of the path and changes of flow direction. A short flow path on a short plate gives a lower pressure drop but also a lower heat transfer rate.

The corrugations in the plate are made by cold pressing the plates. The pitch depends on the pressing depth. A high number of pitches will give narrower channels in the plate and a high turbulence. Wider channels will yield a lower turbulence. A plate corrugation principle diagram is shown in Figure 12.2.3.

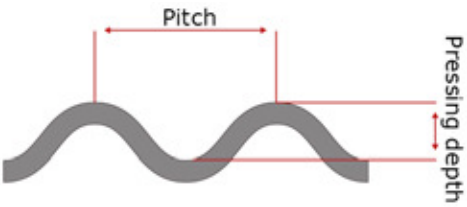

Figure 12.2.3: Plate corrugation

The plates have gaskets mounted at the outer rim to make the space for the channels between the plates and gaskets mounted on the plate to keep the fluids from mixing.

The plates are kept together in a rigid frame to form the flow channels with alternating hot and cold fluids as shown in Figure 12.2.4. The thick red front plate in the frame is called a 'Head' and the thick back plate is called a 'Follower'.

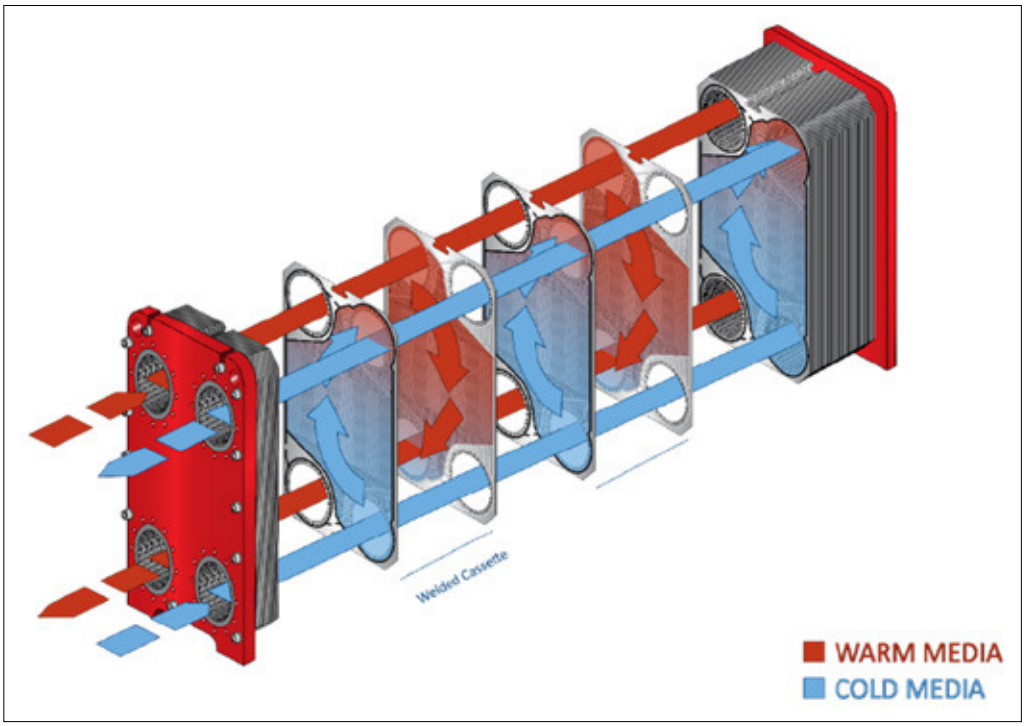

Figure 12.2.4: Working principle of a plate heat exchanger

The semi-welded plate heat exchanger shown in Figure 12.2.4 could be a condenser, as the high-pressure hot fluid is passed through the welded cassette.

The cassettes in a semi-welded plate heat exchanger can have various properties depending on which type of plates are combined into the cassette. The combination of cassette types that are used in the plate heat exchanger will determine the properties of the PHE. Three types of cassettes are used in semi-welded plate heat exchangers:

- Long: Long cassettes consist of two long plates that are welded together, giving a high heat transfer rate and a high pressure loss.
- Mixed: Mixed cassettes consist of a long plate and a short plate that are welded together.
- Short: Short cassettes consist of two short plates that are welded together, giving a low pressure drop but also a low heat transfer rate.

It is possible to change the flow direction of a media in the plate heat exchanger by using a multi-pass solution. Changing the flow direction can be beneficial, e.g. for evaporators when running co-current in an evaporation section to kickstart the evaporation with a large temperature difference, while running counter-current in the superheating section.

The plate materials for semi-welded plates are typically stainless steel or titanium, which supports ammonia, HFCs and brines.

The plate thicknesses available are 0.5 mm, 0.6 mm and 0.7 mm. The thickness of the plates determines the strength of the plate heat exchanger and the maximum operating pressure. The last plate in the plate rack, the end plate, does not usually have connection ports where fluid runs through as the other plates. When performing evacuation of the system before start-up, one should be aware of the vacuum pressure that is applied to the plate heat exchanger. If the connection ports are large, an excessively low vacuum pressure can cause the area of the connection ports on the end plate to deform permanently. This affects the strength of the plate heat exchanger and can lead to unwanted and unsafe operation of the heat exchanger. One should pay attention to the vacuum pressure that is used to evacuate the system when plate heat exchangers are installed. Typically, the thickness of the end plate will be as thick as possible, e.g. 0.7 mm (0.028 in).

An assembled semi-welded plate heat exchanger is shown in Figure 12.2.5. The plates are kept together by tie bolts that are bolted to the 'Head' plate and the 'Follower' plate. In addition, the plates are supported by a guiding bar at the bottom and a carrying bar at the top. The guiding bar and the carrying bar are bolted to the 'Head' plate and a support column behind the 'Follower' plate.

© Danfoss | Climate Solutions | 2022.10

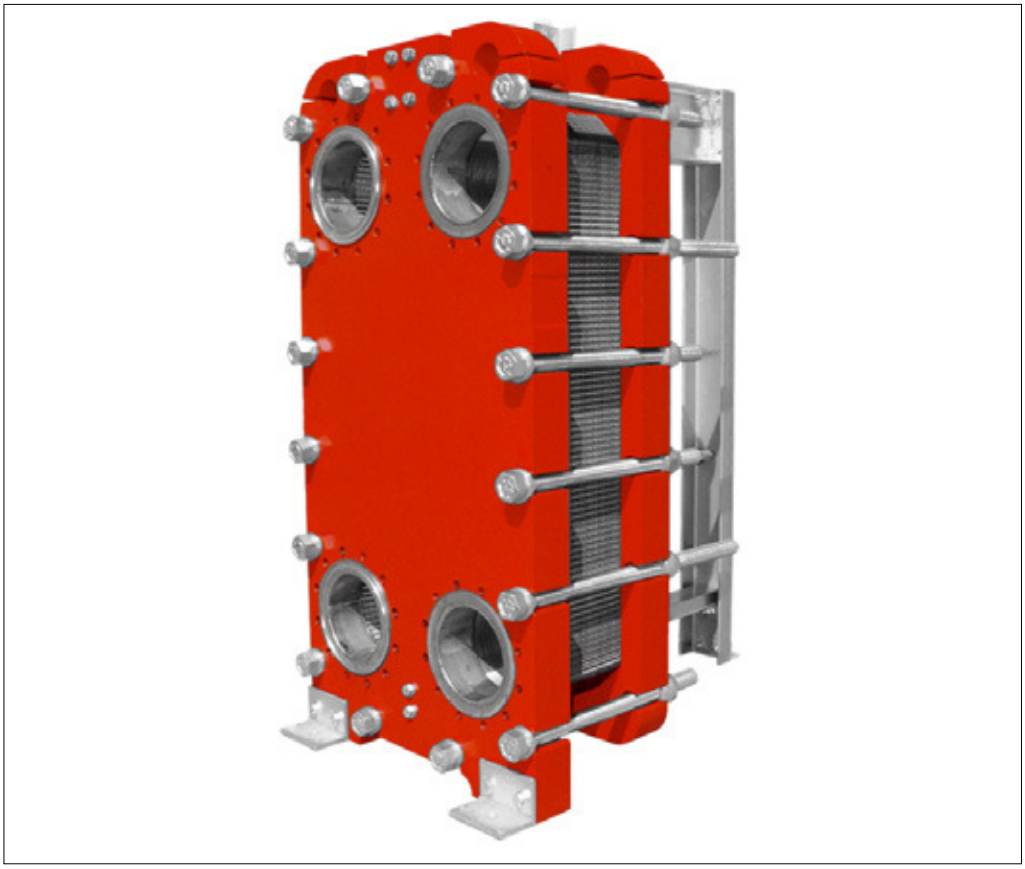

Figure 12.2.5: Assembly of a semi-welded plate heat exchanger

Danfoss can provide plate heat exchangers for industrial refrigeration applications, including plate heat exchangers for evaporators and condensers.

Fully gasketed plate heat exchangers: All plates are mounted with gaskets to enclose the heat transfer area on the plates. Fully gasketed PHEs are typically used with water or brine on both the hot and cold side. Pressure levels are typically below 25 bar (363 psi) temperatures below 150 °C (302 °F).

Semi-welded plate heat exchangers: Plates are made in cassettes. Two flow plates are laser-welded together as a cassette to create a sealed flow channel. On the other side of the plate, gaskets are mounted to seal the flow channel between each cassette. Semi-welded PHEs can usually handle higher pressures than fully gasketed PHEs – up to 40 bar (580 psi) (on the welded side) and temperatures below 180 °C (356 °F). Semi-welded PHEs are typically used for heat transfer between refrigerant and brine or refrigerant and refrigerant.

Fully welded plate heat exchangers: All plates are welded together to seal the flow channels between them. Among fully welded plate heat exchangers there also exists brazed plate PHE, which is sealed by copper or nickel melted under vacuum and fusion-welded PHE, which is made of stainless steel plates that are welded together by fusion.

12.3 Installation of heat exchangers

It is important to install and use the systems heat exchangers in a way that does not compromise their efficient and safe operation.

12.3.1 Evaporators

It is crucial that evaporators are installed in a correct way, so that pressure loss is minimized, liquid is fed properly and oil in the evaporator is handled to avoid fouling and loss of cooling capacity.

Thermosyphon evaporators

Thermosyphon evaporators are the most critical component with regard to installation. Thermosyphon evaporators rely on a natural circulation to maintain a sufficient flow of refrigerant, and if the system does not support this, the performance will suffer. A thermosyphon evaporator is shown in Figure 12.3.1 below.

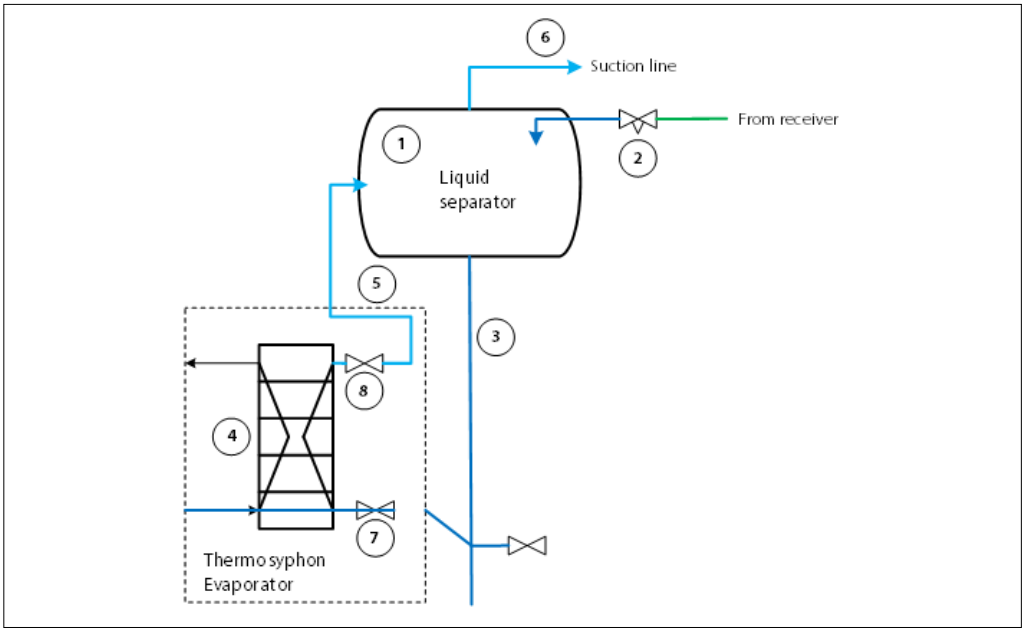

Figure 12.3.1: Thermosyphon evaporator

High-pressure liquid is fed to the separator (1) through an expansion valve (2). Liquid settles at the bottom of the separator and is led to the evaporator (4) through the 'drop leg' (3). From the evaporator, the two-phase return flow is led through the 'wet return' (5) back to the separator where the liquid part is separated. After separation, the dry (liquid-free) gas is led to the compressor through the suction nozzle (6). The evaporator has two SVA service valves (7) and (8).

Oil drain

An oil drain/return valve is located at the bottom of the drop leg. It is important to ensure that oil stays in the drop leg and does not enter the heat exchanger. If oil is present in the heat exchanger, it creates fouling which reduces the heat transfer or, in the worst-case scenario, partially fills the heat exchanger with oil. The line from the drop leg to the evaporator must slope up towards the heat exchanger and it must be designed to have a low speed to allow oil to drain back into the bottom of the drop pipe where it can be collected.

In some cases, an external vessel is attached at the bottom of the drop leg to collect oil. If automatic oil return is desired, this vessel can be isolated from the separator by solenoid valves and the oil moved back to the compressor through the use of the compressor's discharge pressure.

An alternative solution often seen is to provide a small pipe that collects oil from the bottom of the heat exchanger.

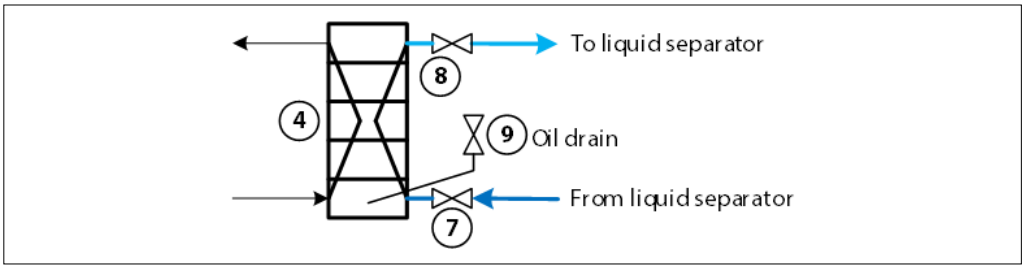

Figure 12.3.2: Oil drain from evaporator

While this will drain oil from the evaporator, it is not recommended because it means that the oil is already in the evaporator. In the 'port' – the channel created by the holes in the plates – the flow can be rather turbulent and the oil might not be available for collection before a large amount is present in the evaporator.

Circulation

The height difference between the level in the separator and the evaporator inlet is the driving force for the thermosyphon evaporator.

The pressure difference between the separator and evaporator inlet is thus:

$$\Delta P = \rho \cdot g \cdot \Delta H$$

Where

ΔP	is the driving pressure (Pa / psi)
ρ	is the liquid density (kg/m³ / ln/ft³)
g	is the gravity (m/s² / ft/s²)
ΔH	is the height difference (m / ft)

© Danfoss | Climate Solutions | 2022.10

This driving pressure needs to be larger than the combined pressure loss in the evaporator, the wet return and the valves in the circuit.

It is recommended that the circuit be designed for a circulation rate of 3, since this provides a safety margin. The system will perform satisfactorily if the circulation rate drops to 2.5 because of uncertainties in the calculation, while if it is calculated at 1.2 and uncertainties give a circulation rate less than 1, performance will not be as expected.

The pressure loss in the evaporator is given from the design of the heat exchanger and is listed in the calculation results.

Pumped evaporators

For pumped evaporators – very often air coolers or plate freezers – some of the same considerations for thermosyphon evaporators should also be taken for pumped evaporators. The driving pressure, however, is secured by a pump. The wet return still needs to be designed according to the riser rules, but rather than hindering circulation, the primary problem of a riser in a pumped system is the pressure loss. An excessive pressure loss will increase the evaporating temperature in the evaporator and thus reduce capacity.

12.3.2 DX evaporators

DX, or direct expansion, signifies that the expansion valve feeds the evaporator directly from the high-pressure side. The amount of refrigerant expanded to an evaporator is traditionally controlled by superheat. Usually a superheat of 5 to 10K (9 to 18 °F) is desired to ensure that all refrigerant is evaporated. Failure to do so can result in compressor damage from either liquid hammer (attempt at compressing liquid) or poor lubrication from refrigerant in the oil.

Typically, DX evaporators are used in CO_2 and HFC systems, primarily in air coolers, but also in chillers. In R717 systems, DX has not been used to a great extent due to difficulties with control of the injection of refrigerant. However, in recent years the problem has been worked on and a solution is perhaps within reach.

The refrigerant injected into a DX evaporator is partially evaporated from the flashing process, so the speed in the evaporator channels is high from the start, as opposed to a flooded evaporator where it is 100% liquid and the speed is low. That results in higher heat transfer in the first part of the evaporator, however since the evaporator needs to superheat the evaporated refrigerant it has another zone with low heat transfer (and lower temperature difference). Overall, the DX evaporator often needs a higher media to evaporating temperature difference to cope with the superheating zone which makes it less efficient than a flooded evaporator.

A special challenge in DX evaporators is the distribution of the refrigerant fed to the evaporators since it is a mixture of gas and liquid. Depending on the type of evaporator, different types of distributors are available, but in general they have a relatively high pressure loss, which in itself is not a problem, as it does not affect the performance of the evaporator. However, the pressure loss reduces the pressure difference available to the expansion device and this needs to be considered when selecting valves.

12.3.3 Condensers

Condenser installation depends on the way injection to the low-pressure side is controlled. Note that the terms 'high-pressure float valve operation' and 'low-pressure float valve operation' refer to the mode of operation, not specifically the use of a float valve. Both operation modes can be achieved by using level switches/ transmitters and a normal expansion valve.

High-pressure float valve operation

High-pressure float valve operation is expansion of the liquid immediately after the condenser. Any variation in the charge volume due to variations in capacity must be handled at the low-pressure side, e.g. in a liquid separator. Since the flow after the expansion valve is two-phase, it is not suitable for distribution to more than one location and thus it is primarily used in systems with only one low-pressure separator, such as a chiller unit.

High-pressure float valves are usually mounted immediately after the condenser and as such pose no special problems with regard to condenser installation.

Low-pressure float valve operation

Low-pressure float valve operation controls the expansion of the condensed liquid to keep a given level in one or more low-pressure separators. Any variation of the charge volume due to variations in capacity must be handled on the high-pressure side, e.g. in a receiver.

To ensure proper functioning of a condenser in a low-pressure float valve system, the installation must be correct.

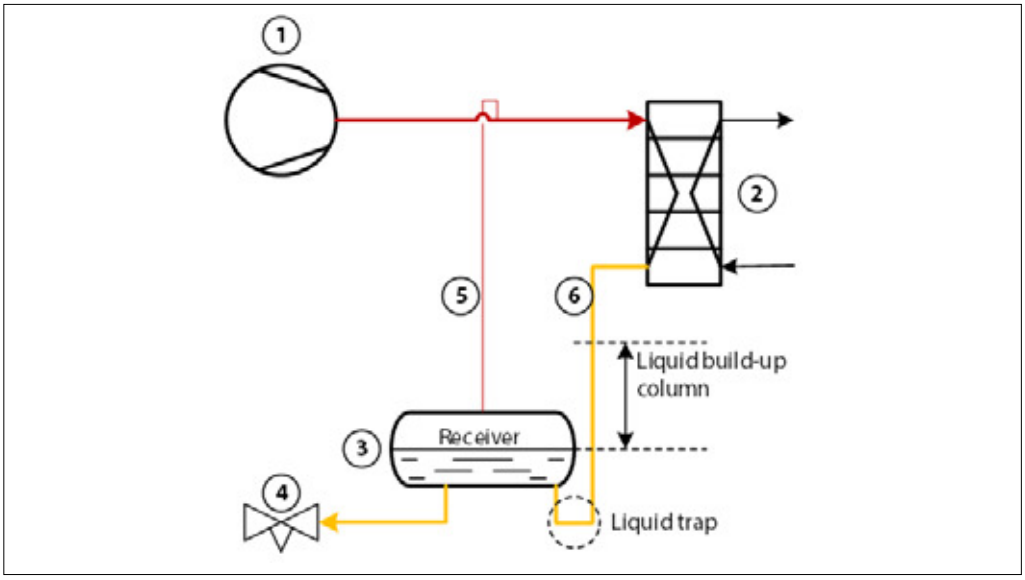

Figure 12.3.3: Low-pressure float valve operation with connection to bottom of receiver

The compressor (1) delivers discharge gas to the condenser (2) that condenses the gas into liquid, which is stored in the receiver (3) until a demand from the low-pressure side requires re-filling through the expansion valve (4).

During times where the expansion valve is closed, the condenser will still produce liquid that needs to flow into the receiver. However, adding a certain volume of liquid requires the removal of the same volume of gas from the receiver. Otherwise the pressure in the condenser will increase to compress the gas in the receiver or the liquid will accumulate in the condenser. Both situations lead to an undesirable operation of the condenser (and compressor). To remove gas from the receiver, an equalization line (5) is added, allowing gas to pass back to the condenser and securing free flow of liquid into the receiver.

However, the installation of the equalization line short-circuits the condenser. The condenser will have a pressure loss and therefore, the pressure in the outlet of the condenser will be lower than the pressure in the receiver, restricting the flow to the receiver. To counter this, a drop leg (6) on the outlet of the condenser must be used. The drop leg must have a liquid trap at the bottom to allow liquid to build up in the drop leg. This liquid build-up will provide a positive pressure that counters the pressure drop in the condenser. The height of the drop leg must be larger than the pressure loss in the condenser, expressed in metres of liquid. In the diagram above in Figure 12.3.3, the liquid trap is secured through entering the receiver from the bottom, using the liquid level in the receiver as the top level. An alternative solution is to enter the receiver through the top while having an external liquid trap, as depicted below.

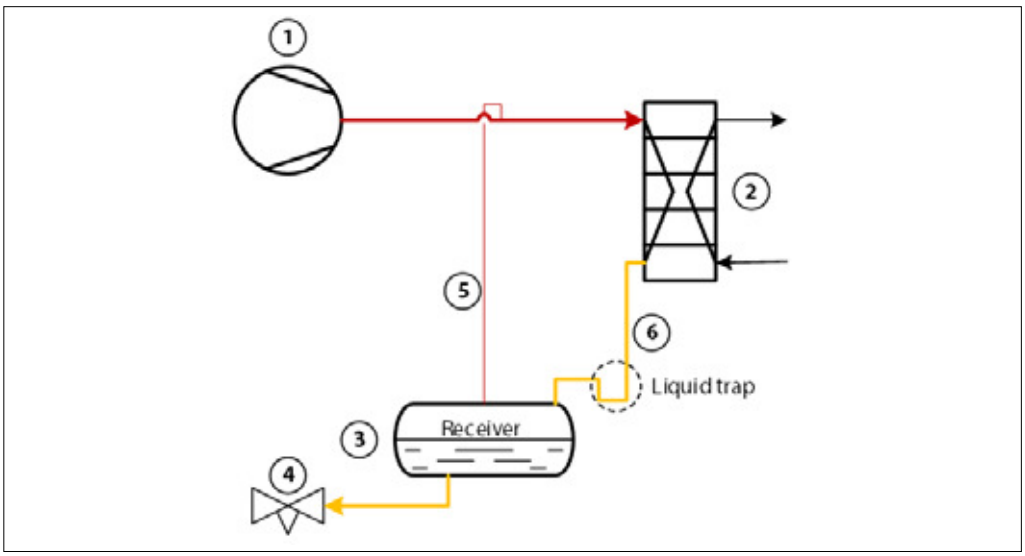

Figure 12.3.4: Low-pressure float valve operation with connection to top of receiver

Especially in the case of multiple condensers or multiple circuits in a single condenser, it is essential that these guidelines are followed.

© Danfoss | Climate Solutions | 2022.10

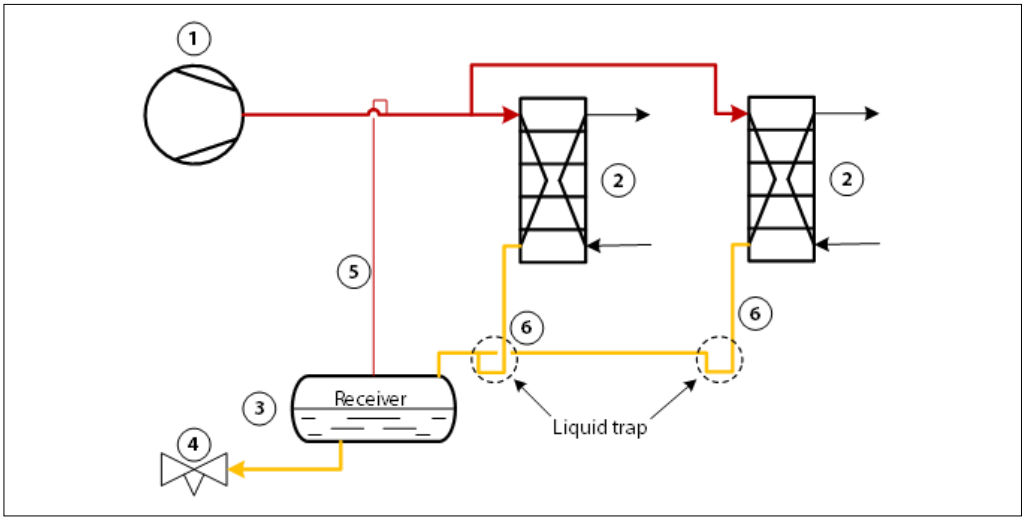

Figure 12.3.5: Low-pressure float valve operation with parallel connected condensers

Note that the condenser outlets are not collected until after the liquid trap. This allows the condensers to even out their pressure loss individually. If the two condensers are of a different size/construction or one is more fouled than the other, they will have a different pressure loss. Connecting these at outlet level will result in liquid accumulating in the one with the lowest pressure loss, reducing capacity.

Note that the use of individual drop legs is also necessary for high-pressure float valve operation in the case of multiple condensers/circuits.

12.3.4 Oil coolers

The oil coolers described in this section are either brine/water or refrigerant-cooled. Air-cooled oil coolers are shown in chapter 6.

Brine/water-cooled oil coolers often deliver the oil cooling load to a heat recovery system, but it is also common to disperse the oil cooling load in a separate air-cooled cooling tower. Brine/water cooled oil coolers pose no special problems to install.

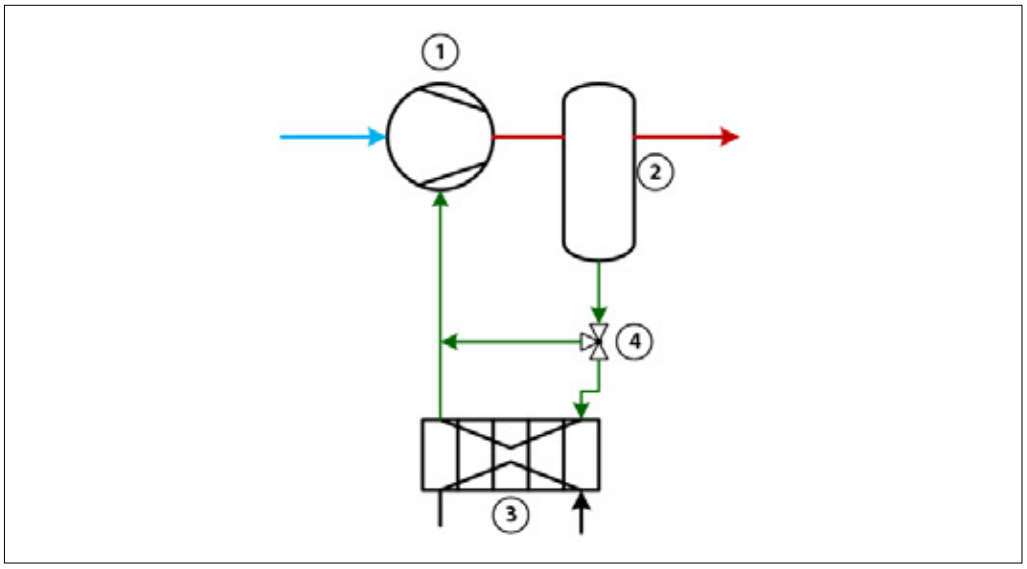

Figure 12.3.6: Brine/water cooled oil cooler

The (screw) compressors (1) discharge gas contains oil, which is separated in the oil separator (2). This oil is led to the oil cooler (3) where it is cooled by a water/glycol flow. A 3-way valve (4) regulates the temperature of the oil passed to the compressor as the capacity of the oil cooler might be too high with varying compressor loads or condensing temperatures.

Refrigerant-cooled oil coolers are often referred to as 'thermosyphon oil coolers' as the evaporative circuit employs the thermosyphon principle.

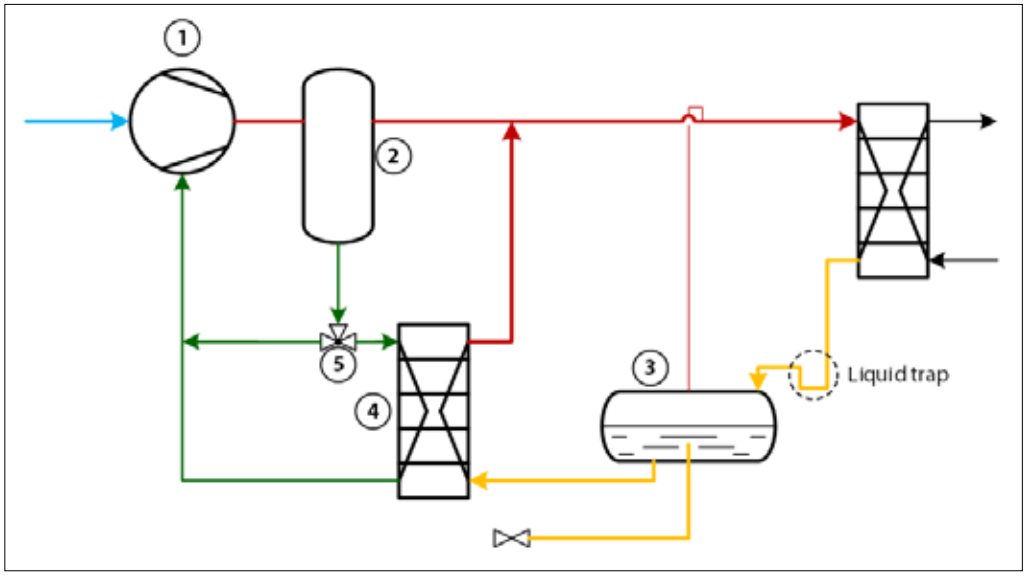

Figure 12.3.7: Thermosyphon oil cooler

The oil circuit is the same as for the brine/water-cooled oil coolers. The cooler is cooled by evaporation of liquid from the condenser. This liquid is evaporated at condensing pressure/temperature and passed back to the compressor's discharge line to be re-condensed in the condenser. Alternatively, the oil cooler can return the partly evaporated refrigerant to the receiver. However, this requires the pressure equalization line between the receiver and the compressor's discharge line to be dimensioned to take the gas flow.

The evaporating side of these thermosyphon oil coolers requires the same considerations as a thermosyphon evaporator. The driving force is a height difference from the liquid level in the receiver and the pressure losses are again the pressure loss in the evaporator (oil cooler) and the wet return line. As before, the wet return line needs to be calculated as a riser.

Note that it is necessary to provide the oil cooler with a 'priority'. If the low-pressure system is demanding liquid and no priority is supplied, then the oil cooler might run dry, which results in no oil cooling. No oil cooling is naturally a problem for the compressor. Usually a priority volume of refrigerant liquid is calculated from what the oil cooler evaporates in 5 to 7 minutes. The priority can be secured by having the receiver outlet for the low-pressure system raised above the bottom of the receiver, or by adding a separate vessel that is filled by the condenser before the receiver gets any liquid, the former method being illustrated in Figure 12.3.7.

Thermosyphon oil coolers are rarely seen on high-pressure float valve systems since there is no receiver to supply liquid. It is possible to mount a priority vessel between the condenser and the expansion valve, however careful consideration needs to be made to counter the pressure loss in the condenser, since the oil cooler needs to return the evaporated refrigerant back to the discharge line, which is at a higher pressure (corresponding to the pressure loss in the condenser) than the liquid before the expansion valve. A drop leg similar to the low-pressure float valve installation is necessary and, on top of that, there must be a driving height to drive the thermosyphon function of the oil cooler.

12.3.5 De-superheaters

The primary consideration for a de-superheater is to have as little pressure loss as possible, as this increases the compressor's discharge pressure which results in increased power consumption.

A secondary consideration is to avoid condensation in the de-superheater. If the water/brine heated in the de-superheater is colder than the condensing temperature, it is possible to condense some of the refrigerant in the de-superheater. It is recommended to avoid running with such low water temperatures. If it is not possible, then the de-superheater should be designed in such a way that condensed liquid can drain from the heat exchanger and not be built up inside. In addition, the piping from the de-superheater should slope down towards the condenser, hindering the condensed refrigerant from settling in undesirable places.

12.3.6 Subcoolers

Similar to the de-superheater, a subcooler is not critical with regard to installation. The primary consideration is to avoid having too large a pressure loss on the refrigerant side. If the pressure loss (in °C or F) exceeds the subcooling (in °C or F) provided by the subcooler, the refrigerant will 'flash' causing problems for expansion valves downstream.

© Danfoss | Climate Solutions | 2022.10

12.3.7 Economizers

Economizers can be of the 'open' or 'closed' type. For both types the pressure in these are a balance between the capacity of the economizer and how much the compressor's economizer port can absorb.

The economizer port is located physically in the screw compressor after the compression has (just) started. As such, the pressure between the screw compressor's rotors is higher than suction pressure and to be able to feed additional gas in between the rotors, the pressure in the economizer port needs to be higher still. The higher the economizer port pressure, the more gas can be absorbed by the port. On the other hand, the port pressure equates to a saturation (evaporating) temperature in the economizer, which again with a higher pressure means a lower capacity.

In many cases the economizer pressure is controlled by a suction pressure regulation to be above what the economizer port dictates. It is, of course, not possible to go below what the economizer port dictates.

The simplest form of economizer is the 'open' economizer, which is a vessel (3) to which the condenser (2) liquid is flashed from condensing pressure to economizer pressure. The gas developed by this flashing is passed to the economizer port. The liquid, at economizer temperature, is flashed once again to the low-pressure side. The benefit of this type is that it is a very simple vessel, the temperature of the liquid to the low-pressure side is the lowest possible, but the downside is that the liquid to the low-pressure side is at a lower pressure, requiring a larger expansion valve.

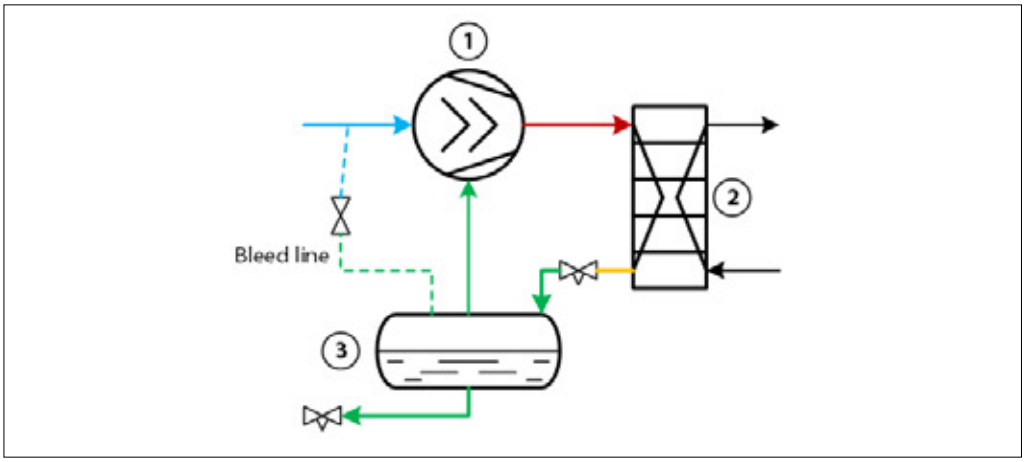

Figure 12.3.8: Open economizer with bleed line

In contrast, the 'closed' economizer is a heat exchanger (3) that cools the condenser (2) liquid at condensing pressure. To perform the cooling duty, a part of the condenser liquid is flashed to economizer pressure, evaporated and passed to the compressor's (1) economizer port. In the below diagram, the economizer heat exchanger is a thermosyphon evaporator, but a DX version can be used if suitable.

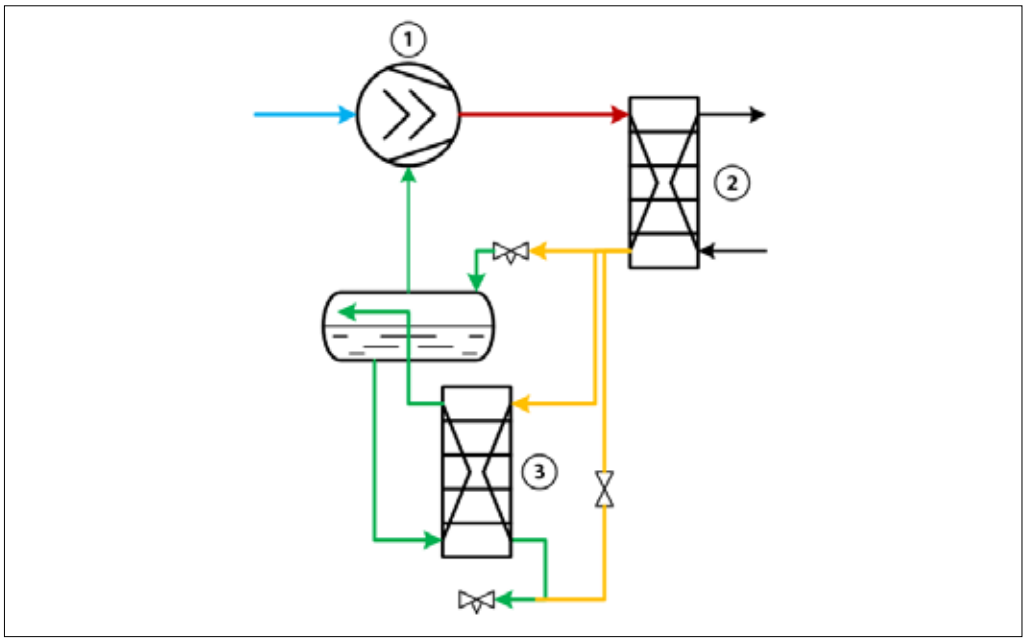

Figure 12.3.9: Closed economizer

The benefit of the closed economizer is that the liquid to the low-pressure side is at condensing pressure and thus the expansion devices can be smaller than with an open economizer. The downside is that the liquid temperature cannot reach the temperatures achieved with an open economizer, since a temperature difference needs to exist in the heat exchanger. Because of this, the closed economizer is a little less efficient than an open type.

One important thing to know about screw compressor economizer ports is that if the compressor is capacity-regulated using slide valves, the economizer port will be exposed to the suction side very shortly after the compressor regulates down from 100%. This has two important implications. The economizer pressure will drop to suction pressure, which is very bad for the open economizer, since the pressure difference between the economizer vessel and the suction side is zero. This means that no flow will pass through the expansion devices from the economizer to the low-pressure side. The closed economizer will have an increased capacity. In addition, the economizer will load the suction port, meaning that there is less flow available for actual evaporation on the low-pressure side.

Naturally, these problems do not occur it the compressor is VFD (variable frequency drive) controlled only.

Usually economizers are fitted with valves in the economizer suction line to control the pressure, to start/stop the economizer and to avoid the above problems. In some instances, it is not desirable to use all the capacity available on the economizer port and thus a simple suction pressure regulation is employed. With open economizers on slide valve-controlled systems, it is necessary to control the minimum pressure in the economizer to ensure a minimum pressure difference for the expansion valves. This can be implementing through a minimum pressure, assuming suction pressure does not rise above a certain value, or a pressure difference to the suction pressure.

Finally, it can be desirable to start and stop the economizer according to the operation of the system. The closed economizer is easily stopped with a solenoid in the economizer suction line. It is necessary to consider the pressure loss in the heat exchanger compared to the (anticipated) subcooling from the condenser to avoid flash gas before the expansion valve.

A simple solenoid in the economizer suction line is not appropriate for an open economizer. The entire refrigerant flow is flashed to the economizer vessel, and when the pressure is below condensing pressure, the gas developed during the flashing will increase the pressure until it is at or just below the condensing pressure. This makes it impossible for the expansion valve between the condenser and economizer to deliver enough flow. Therefore, a separate bleed line is needed to dispense of the flash gas to the suction line. The bleed line must contain valves that secure an appropriate economizer pressure for both expansion valves to function. Compared to not having an economizer, the total impact of this installation on the compressor will be zero. The amount of gas flashed to the suction line is countered by a lower temperature of the liquid passed to the evaporators.

However, if a side load is run in parallel with the economizer, it is either not possible or ineffective to stop the economizer. Stopping a closed economizer will stop the side load as well, while with an open economizer, stopping it will move the side load to the suction side, which is much less efficient.

The screw compressor's rotor 'lobes' pass the economizer port while shifting from one 'channel' to another within the compressor. This results in oscillations in the economizer pressure, which can result in undesirable effects such as valve oscillation. To counter this, a damper can be fitted that reduces these oscillations and thereby reduces the strain put on the economizer system. This is described in chapter 2.5 regarding economizer line pulsation damping units.

12.3.8 Superheaters

Superheaters use cooling from the condenser liquid to heat the suction gas for the compressor to provide security of dry suction gas.

Like subcoolers and de-superheaters, the pressure loss in these heat exchangers is important with regard to system efficiency, but apart from that the installation poses few problems.

© Danfoss | Climate Solutions | 2022.10

ENGINEERING
TOMORROW

A **partnership** based on extensive **application knowledge**

Working with Danfoss means more. It means that you do not only get highly reliable, efficient, and innovative solutions – you also get to partner with a world-leading supplier in industrial refrigeration. Our partnership gives you access to a wide range of benefits. From extensive application knowledge to a wide range of solutions and tools.

Supporting you and your business is our priority. Let's talk! We believe that long-term business relationship start with a start conversation. Danfoss wants to understand your situation and learn how we can fulfil your needs.

So contact your local Danfoss representative – **and let's talk.**

Coolselector®2 application tool

Coolselector®2 provides a scientific and time saving way to select Danfoss manufactured components. In addition, the too offers sppecific sales/order codes and easy access to consult Danfoss Industrial Refrigeration experts for advice.

Link to Cool selector
Coolselector®2 free cooling calculation software | Danfoss

Support Tools for Professionals (TBD)

CoolConfig

IR Application Tool: How a two-stage ammonia plant works

IR App: Complete overview of spare parts and service kits

Hexact: Plate heat exchanger design and configuration tool

Application Handbook: How to select control methods for different refrigeration systems

3D CAD symbols: Download symbols and illustrations

Download now:
Downloads | Danfoss

Training for Professionals

Danfoss Learning
Your personal learning portal is fast, easy and always accessible.
www.learning.danfoss.co.uk

Follow us in **Social media**

LinkedIn: http://linkedin.com/showcase/DanfossCool

YouTube: http://youtube.com/c/DanfossCool

Twitter: http://twitter.com/DanfossCool

Instagram: http://instagram.com/DanfossCool

Danfoss A/S
Climate Solutions • danfoss.com • +45 7488 2222

Any information, including, but not limited to information on selection of product, its application or use, product design, weight, dimensions, capacity or any other technical data in product manuals, catalogues descriptions, advertisements, etc. and whether made available in writing, orally, electronically, online or via download, shall be considered informative, and is only binding if and to the extent, explicit reference is made in a quotation or order confirmation. Danfoss cannot accept any responsibility for possible errors in catalogues, brochures, videos and other material.
Danfoss reserves the right to alter its products without notice. This also applies to products ordered but not delivered provided that such alterations can be made without changes to form, fit or function of the product.
All trademarks in this material are property of Danfoss A/S or Danfoss group companies. Danfoss and the Danfoss logo are trademarks of Danfoss A/S. All rights reserved.

© Danfoss | Climate Solutions | 2022.10