Installation Guide

XB12 Mounting bracket & Insulations

❶ Mounting bracket

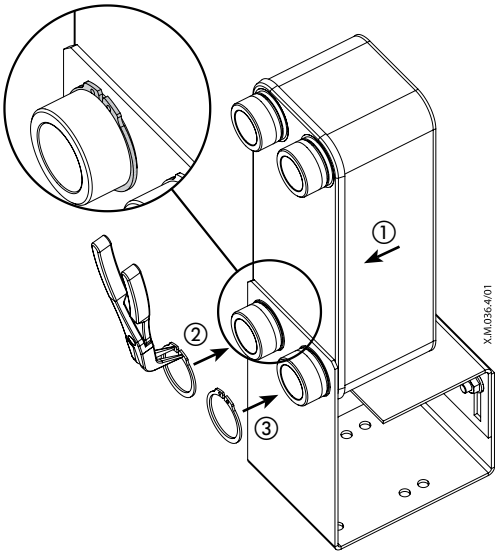

❷ EPP Insulation

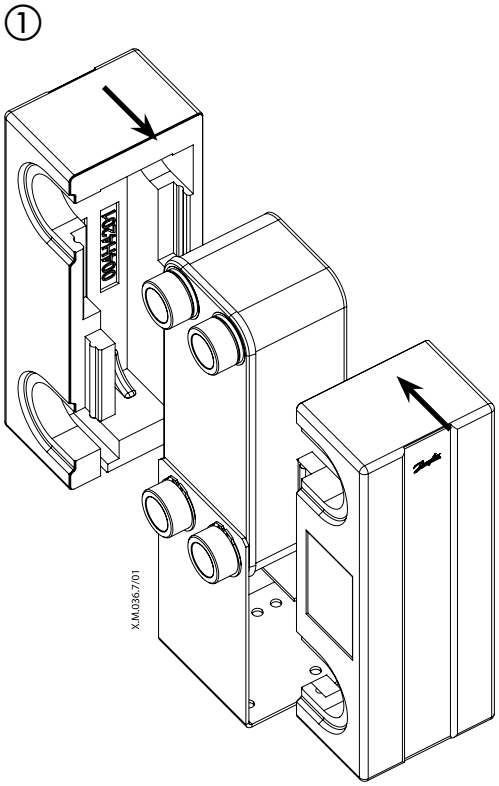

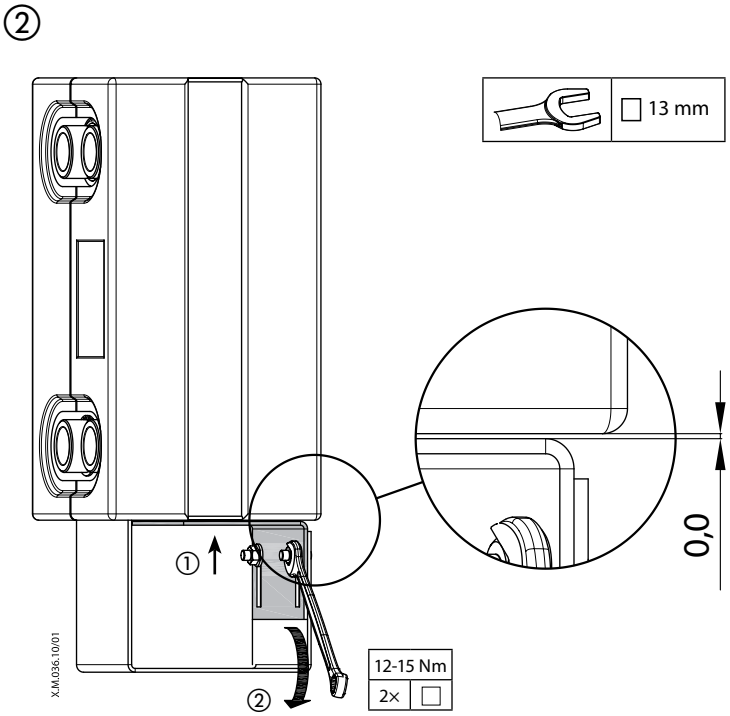

3 PU Insulation

①

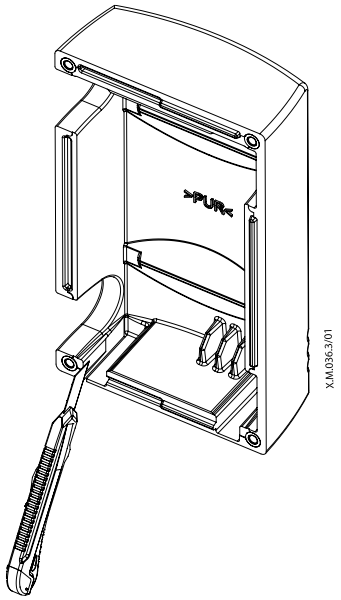

②

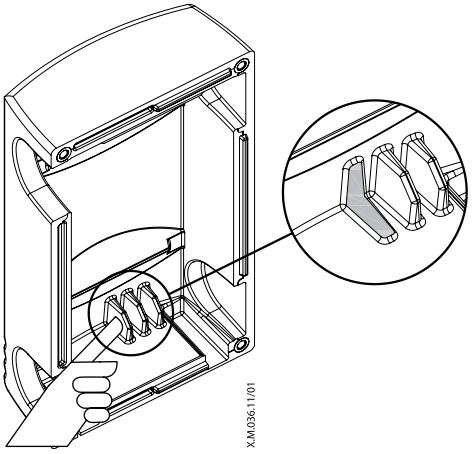

③

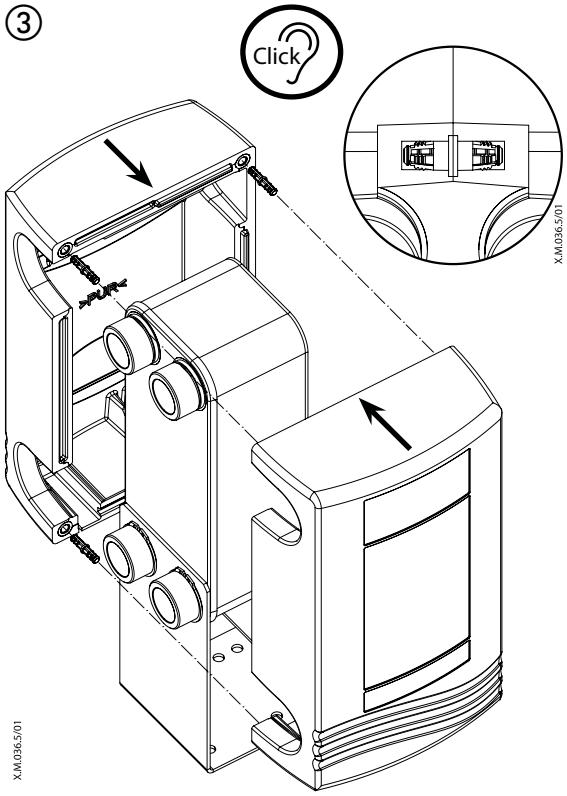

④

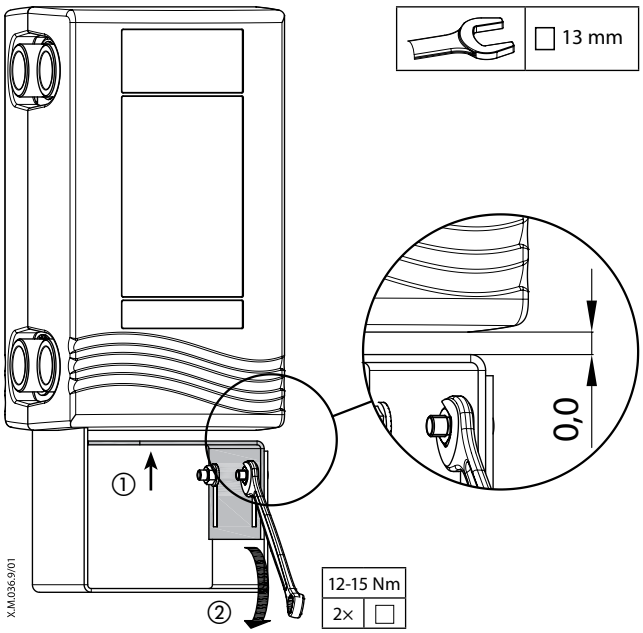

Danfoss can accept no responsibility for possible errors in catalogues, brochures and other printed material. Danfoss reserves the right to alter its products without notice. This also applies to products already on order provided that such alterations can be made without subsequential changes being necessary in specifications already agreed.
All trademarks in this material are property of the respective companies. Danfoss and the Danfoss logotype are trademarks of Danfoss A/S. All rights reserved.

Produced by Danfoss A/S © 07/2014