D Series Hydraulic Gear Pump Seal Kit
Service Instruction Bulletin
Single pump seals replacement procedure

Genuine Parts

ILLUSTRATION

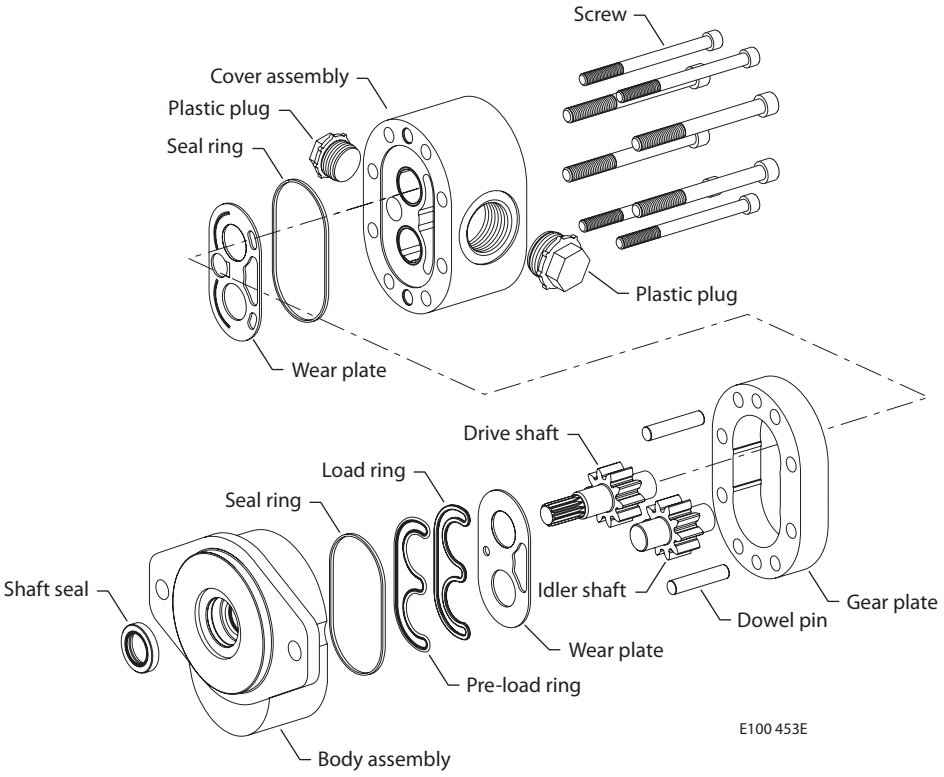

DISASSEMBLY

Identification marks must be made on the side of the pump before disassembly. Proper assembly orientation of the various pump sections is critical.

1. Disassemble the pump, noting the orientation of the gears.
2. Remove the old shaft seal, being careful not to scratch the seal bore.
3. Inspect the body seal bore and shaft seal area.
4. Polish the shaft to remove rust and contaminants, being careful not to scratch the sealing area.
5. Clean and inspect all hardware prior to assembly.

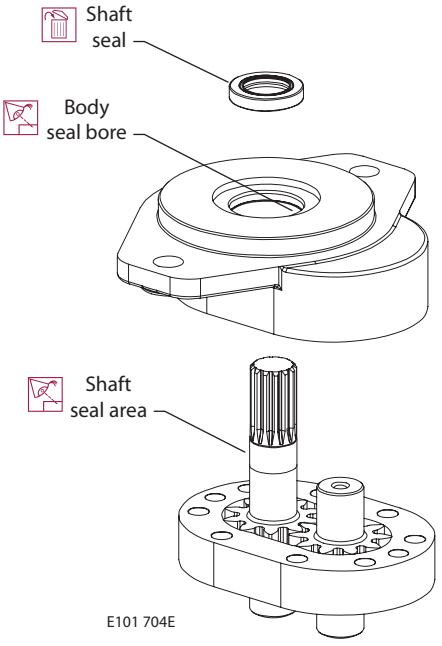

ASSEMBLY

1. Place body assembly, with E-ring seal grooves facing up, into vise with soft jaws or in holding fixture. Extreme caution must be used when using a vise to avoid distorting any parts or damaging mounting pilot.

2. Place the rubber seal ring in body groove.

3. Place the pre-load seal in the bottom of the body E-ring groove.

4. Place the load seal directly on top of the pre-load seal.

5. Find the wear plate with the .250" diameter pressure hole and no oblong holes on the inlet side. Place this wear plate on top of the load ring with the bronze side facing up towards the gears and the .250" pressure hole located on the E-ring side of the body.

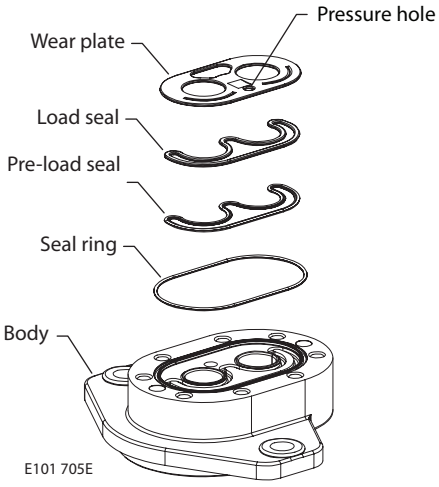

6. Lubricate key or spline end of drive gear with petroleum grease or equivalent and carefully insert in correct bearing bore.

7. Insert idler gear in the other bearing bore.

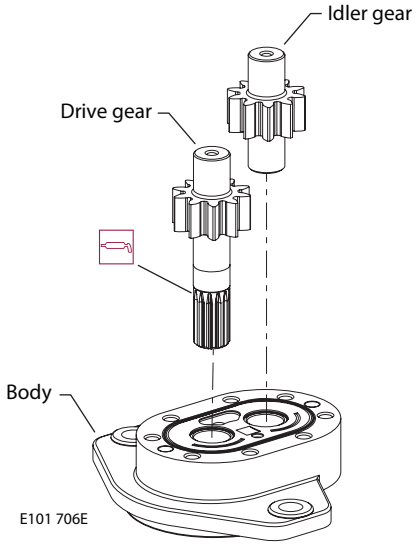

8. Place cover assembly on assembly bench with machined surface facing up.

9. Place the rubber seal ring in cover seal ring groove.

10. Find the wear plate with the .625" diameter pressure hole and two oblong holes on the inlet side. Place the wear plate in the cover with the bronze side facing up towards the gears and the .625" pressure hole located over the circular hole in cover.

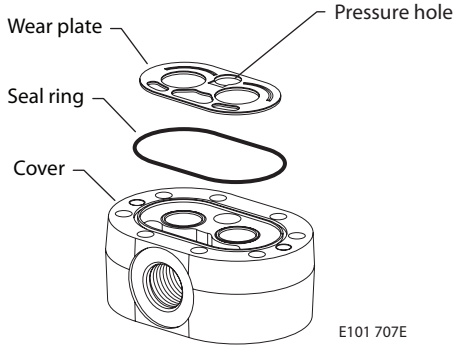

ASSEMBLY
(CONTINUED)

11. Place the gear plate onto the cover.

12. Insert the two dowel pins through the gear plate and into the cover.

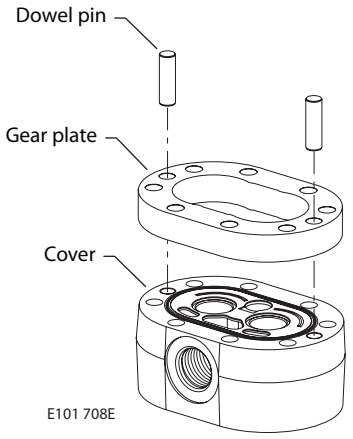

13. Lubricate gearset completely, using clean oil that is compatible with test stand oil.

14. Place cover/gear plate assembly over shaft journals making certain that the pressure holes in the body and cover wear plates are on the same side. If necessary, tap lightly on the back of the cover until dowel pins are completely engaged.

15. Place appropriate screws in the cover holes and turn until thread engages. Use care so that cross-threading does not occur.

16. Turn screws evenly with socket wrench to approximately 27 N·m [20 lbf·ft]. Using a torque wrench, torque screws to 64 N·m [47 lbf·ft] in a crossing pattern begining with one of the four center screws.

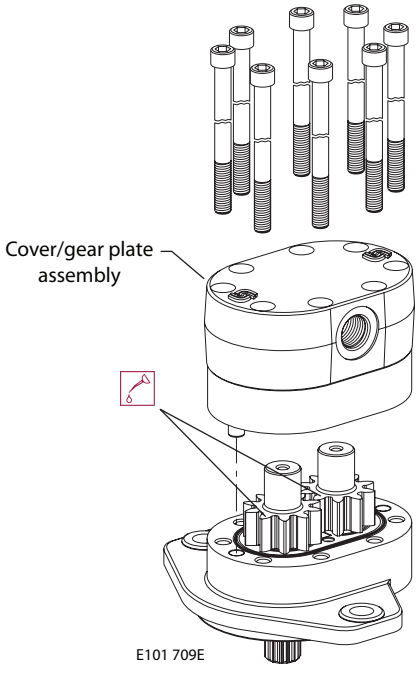

ASSEMBLY
(CONTINUED)

17. Remove assembly from vise or holding fixture and position with drive shaft facing upwards.

18. Place seal bullet over drive shaft, sliding it downward until it bottoms out. If a seal bullet is not available, cover the shaft keyway, exposed threads, or splines with packaging tape to protect the shaft and seal during installation.

19. Apply petroleum grease or equivalent to sealing lips of shaft seal.

20. Place the shaft seal over seal bullet with spring loaded side facing inward and slide it down. If shaft extension allows, remove bullet when sealing lips of seal are clear of keyway or spline.

21. Place driving tool over bullet and/or shaft and press seal into housing with a smooth uniform pressure. Be certain seal is not cocked when applying pressure.

Lip seal to be installed a minimum of 6.35 mm [0.25] below the mounting pilot face surface.

22. Remove tool and bullet.

Bullets and driving tools should be inspected frequently for cracks or other imperfections that may cause seal damage.

23. Rotate drive shaft to make sure it turns smoothly.

