ENGINEERING
TOMORROW

Danfoss

Application guide for ECL Comfort controllers

Get your job done swiftly **Easy selection** of your application is **the key**

The ECL Comfort series offers an optimum range of electronic controllers for temperature control in heating and domestic hot water systems.
In this guide, you will find the full range of applications, intuitively described and illustrated for you to plan and design systems with confidence.

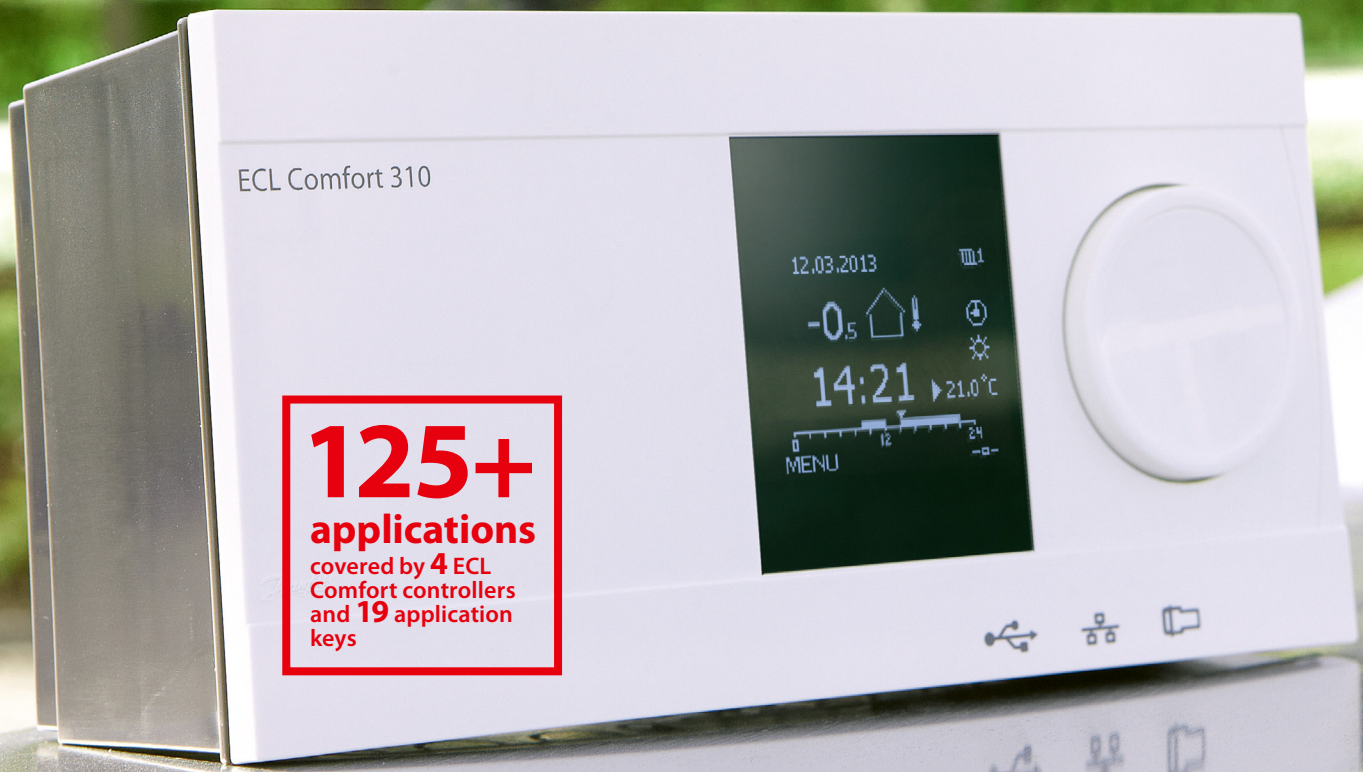

125+
applications
covered by **4** ECL Comfort controllers and **19** application keys

ECL.danfoss.com

Electronic controllers from Danfoss:

Only a few products for an endless number of applications

Based on the success and benefits of previous generations, the Danfoss ECL Comfort 120, 210, 296 and 310 controllers ensure comfort and convenience for heating, cooling and domestic hot water systems.

The components of ECL Comfort

The ECL Comfort range consists of ECL Comfort 120, 210, 296 and 310 – each in an elegant and timeless Scandinavian design.

ECL Comfort 120 is the choice for smaller 1-circuit heating systems for which the installer or user prefer a simple operation and smart device application.

ECL Comfort 210 appeals to users who prefer an increased number of options. The series offers many functional options and can be used for commercial installations. Two control circuits + thermostatic function, optimizer function, 3-point control of actuators, Modbus communication for smaller SCADA systems etc.

ECL Comfort 296 covers the same as ECL Comfort 210 and has in addition M-bus and Ethernet connections. Furthermore, ECL 296 has the popular size, 144 x 96 mm.

ECL Comfort 310 is the advanced controller with a large number of functions, such as: Three control circuits + thermostatic function, optimizer function, 3-point control of actuators, Modbus/M-bus/Ethernet communication etc.

The intelligent key concept for ECL Comfort 210 / 296 / 310 ensures optimum user-friendliness of these advanced controllers.

The ECL Comfort range also comprises an elegantly designed remote control in two versions, which can access all parameters in the controller.

The future is in the keys

The ECL Comfort range and its advanced software key not only meet your present demands but also the future requirements you might have for heating control.

With ECL Comfort 210 / 296 / 310 new demands are covered by new keys with new settings. The few basic models and the large variety of ECL keys give you a considerably better and quicker overview of the unique application opportunities offered by the ECL Comfort range. Menus are available in multiple languages.

By means of the chosen key, it is easy to set the controller and change the factory settings precisely to the relevant type of system and required settings.

The schedule in the ECL Comfort can be programmed for each day in the week. The building will be heated in the comfort periods you request; also holidays can be scheduled on beforehand. This is environmentally sound and saves money.

Some features of ECL Comfort:

- Optimizer and boost function
- Return temperature limitation based on outdoor temperature
- Frost protection
- Heating cut–out function
- Year clock and automatic changeover between summer and winter time
- Copy function to/from the intelligent ECL key
- Anti-bacteria function (DHW circuit)
- Communication via the standardized RS485/TCP/IP, M-bus and Modbus options
- Motor protection
- Automatic saving
- Menus in multiple languages
- Master/slave functions
- Log and alarm
- Holiday program
- Analog input/output
- Refill water function
- Two pump control
- Optimum control of heat exchangers in cascade
- Buffer tank temperature control for heating systems
- 0 - 10 Volt / PWM based speed control of pumps

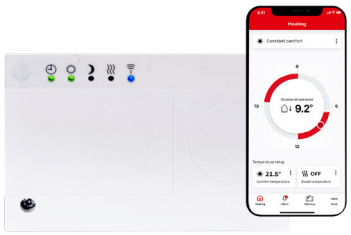

ECL Comfort 210

ECL Comfort 310

ECL Comfort 310

20.01.2010
-0
13:37
22.0°C
MENU

A266
ECL Comfort
210/310

ECL Comfort 296
12:40
MENU

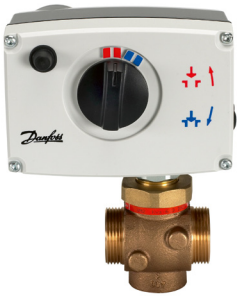

A266
ECL Comfort
210/310

Automatic setup of DHW parameters

A precondition for a well functioning heating system is that the correct settings are made before it is put to use. Adjustments are necessary to preset the control parameters.

Presetting gives the following benefits:

- A high degree of comfort
- Improved protection against lime deposits in DHW heat exchangers
- Energy saving
- Long operating life
- Minimum service

The introduction of automatic setting of control parameters on the controller itself, i.e. auto tuning and motor protection, gives optimum control of the DHW system. This ensures a high degree of comfort, stable control during idle operation and, subsequently, longer motor life.

The setting of control parameters can thus be reduced to one easy and reliable procedure. Auto tuning is especially necessary in DHW systems.

How to do auto tuning with ECL Comfort?

- Open for the tap water to get a constant tapping load
- Activate auto tuning by pushing a button
- Wait 7-25 minutes to complete the tuning

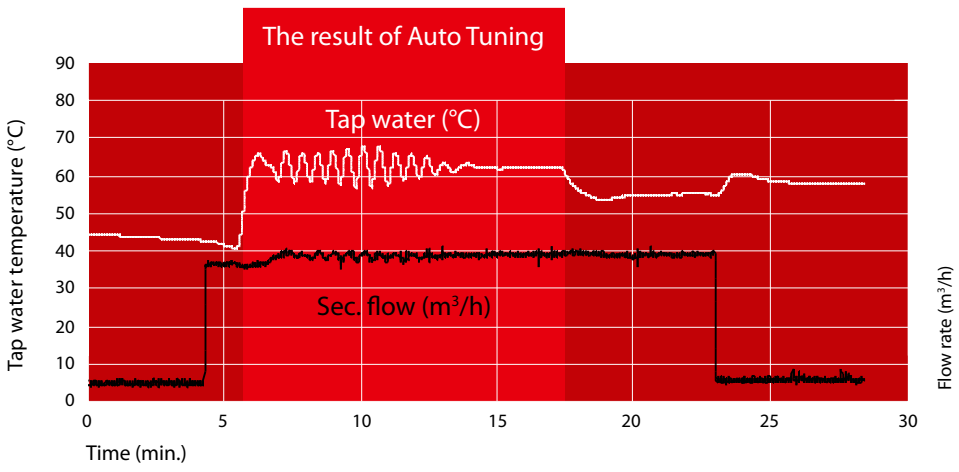

Intelligent communication solutions

Our solutions are wide-ranging – in every respect. We cover almost every area of application. From busy cities and suburbs to idyllic villages – as well as from public or commercial buildings to residential homes.

Intelligent solutions – intelligent communication

Danfoss communication solutions provide the ultimate in control. We don't just supply controllers, but unique software which facilitates remote monitoring and control of district heating systems. Our offering ranges from standard software fully integratable with the existing plant and buildings, to complete systems with full support.

There are many good reasons to choose a solution which allows you to monitor, control – and therefore service – your system remotely, regardless of whether the system services buildings in urban areas or rural communities. Danfoss has – and will supply – an advantageous solution for you.

Your future communication platform

Remote monitoring and communication is the future as of today. Our solutions cover traditional forms of district heating and alternatives, such as biomass plants. A Danfoss platform will provide better, and simplified control over a system, which not only optimizes the control processes, but also yields savings and protects the environment. In some networks you have large pumps and large controllers leading to substantial energy usage. Here it is important with an optimized district heating network. An electronic controller will not only simplify plant management, it will also save energy.

Act proactive to service

Danfoss communication solutions enable you to act pro-actively to provide better service. Thanks to efficient monitoring and alarm systems, they can isolate and remedy problems – even before the customer knows they exist. For example; if the flow temperature is incorrect, the system will automatically activate an alarm, to warn about excessive energy consumption.

For optimum control in any system

Your requirements have been combined with our know-how to extend and innovate our product range. Danfoss markets a comprehensive range of motorized control valves with features that give an optimum fit with the ECL Comfort controller. Our control valves are available in multiple sizes, different materials and with a variety of connections. The range of motorized control valves meet the requirements in any of these applications:

- Terminal and zone
- Heating and cooling
- District heating
- Steam

ENERGY SAVING AND COMFORT IS A MATTER OF OPTIMUM ENERGY CONTROL

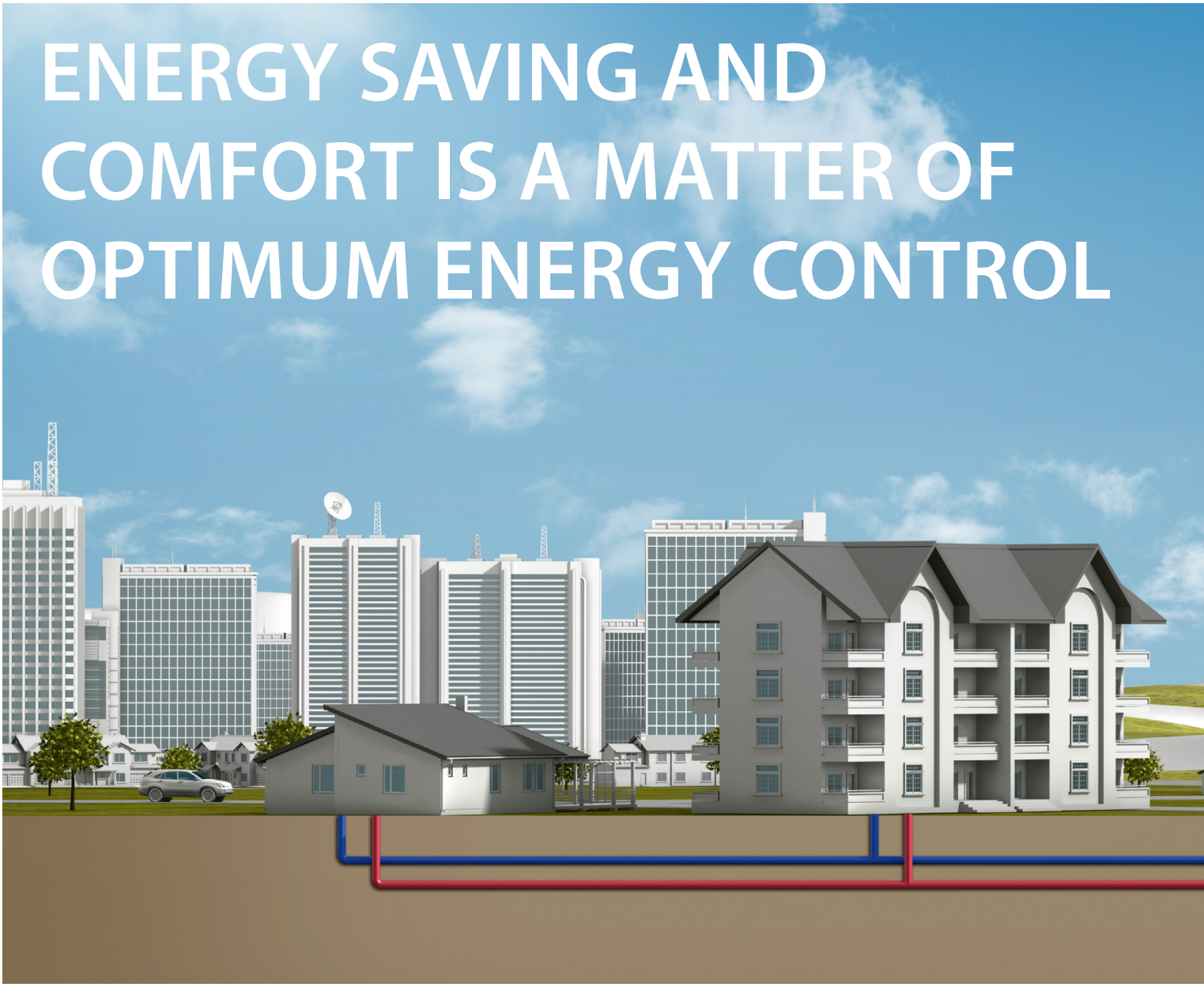

When you look at urban and rural areas with varying housing densities, the selection of heat sources for each individual building will differ. Where available, district heating will most often be a part of the solution. District heating benefits the individual homeowner or tenant as well as the society at large. Where district heating is not available, individual solutions will be used – preferably in combination with renewable energy sources.

One of the solutions for achieving energy savings in any building is the use of electronic controllers for weather compensation. By letting the flow in the heating system of the house reflect outdoor temperatures, optimum operation and performance of the heating installation is obtained.

In a recently published COWI report, the advantages of weather compensation are sound and clear: In one family houses, the expected energy saving is on average 10% – and in some cases up to 40%.

What role does the ECL Comfort play?

The ECL Comfort is an electronic controller for weather compensation. By fitting typical applications for district heating, cooling and micro network systems including communication, it enables you easily to optimize system performance and operation. This leads to energy savings and longer system life.

A correctly installed and commissioned electronic controller is the prerequisite for a stable and well-functioning heating system. Easy installation and an intuitive interface makes sure that the ECL Comfort controller is always installed correctly for the maximum benefit.

The house owners/tenants favorite

For the end-user, ECL Comfort controllers are first and foremost equal to energy savings. Lower energy consumption, registered by the Sonometer™ connected to the ECL Comfort, and a smaller heat bill will always be popular. The comfort level is of course still the same, and operation is made easy with the single dial interface which features a modern design.

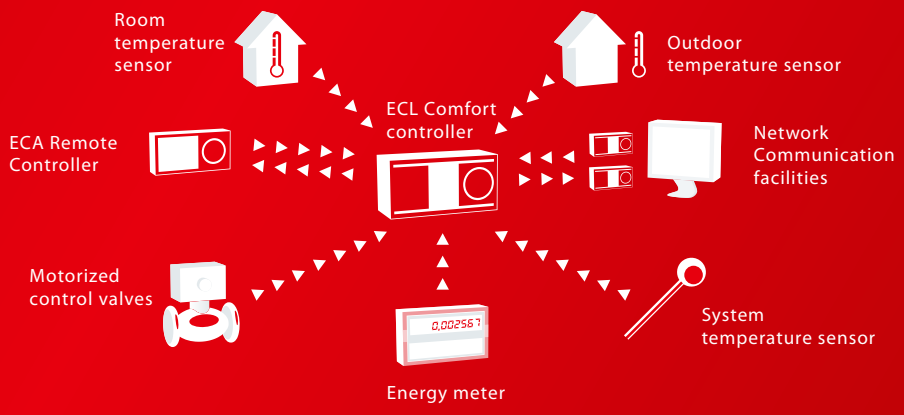

A few steps of commissioning that put you...

Countless advantages

For successful commissioning of the Danfoss ECL Comfort controller only a few steps are required. It is very straightforward, and in fact you don't need any special programming knowledge.

- Elegant no-fuss user interface
- Intuitive software makes operation a breeze
- Instant feedback displayed in your own language
- Access to user data, alarms, logs and settings
- User-friendly technical documentation

Setup wizard
– Language selection

After wiring and connecting system components, such as pumps, actuators and temperature sensors, you can insert the ECL Application Key. Use the turn/push dial to select your preferred language and follow the setup progress on the display.

Setup wizard
– Application selection

Select your application from the system application range included on the ECL Application Key.
You can choose from application-specific factory settings or user-specific settings if they have been stored on the key.

The key to easy installation

The ECL Comfort controller is matched with a full range of ECL Application Keys. Each Application Key is programmed with specific parameters for a particular district heating or cooling application.

The ingenious ECL Application Key makes it easier than ever to install and set up your heating system application in the ECL controller, all without any need for advanced programming. This makes it easy to manage and adjust your application settings.

In the event of malfunction in the heating system the application parameters won't be affected by e.g. power failure since they are stored in the controller. Besides the data logging facility in the ECL controller facilitates troubleshooting and keeps system maintenance at a minimum.

The Application Key also facilitates copying of settings to other ECL controllers in the system. This makes it easy to adjust settings and helps ensure smooth operation and energy optimisation for years to come.

...one step ahead of schedule

Main controller settings

The main control parameters should be configured for optimum commissioning. They are located in the "settings" menu. Room heating and DHW flow temperatures are set in the user menus.

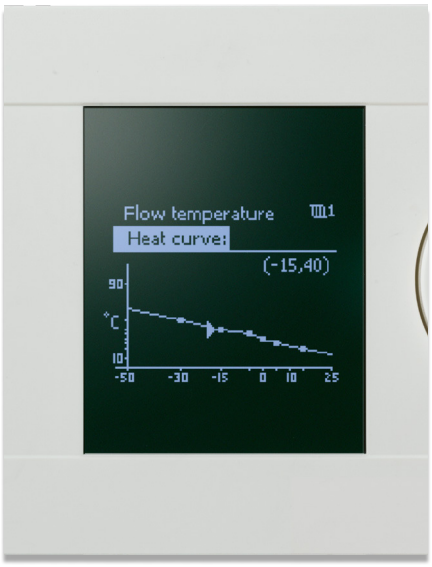

Heating curve

With six configurable coordinates for the flexible heating curve, the ECL Comfort 210 / 296 / 310 controller meets all requirements for achieving an accurate comfort temperature level in the system.

Favorite display

Select your favorite display from a set of pre-defined displays in order to get a quick system overview. Using your favorite display, you can perform functions such as selecting the controller mode (scheduled, comfort, saving or frost protection mode) and desired comfort temperature level (room and DHW).

One key
100% application expertise

The data programmed in every ECL Application Key incorporates dedicated and applied expertise from worldwide experience with district heating applications. This is your best guarantee for optimum system performance.

No
unplanned service visits

With correct commissioning, the lasting durability of ECL leads to full customer satisfaction and no unplanned service visits.

ECL Comfort 120 + ECL Go App

Stand-alone controller with installation App for 1 heating circuit

- 1 control circuit
- 4 built-in heating applications
- ECL Go App:
  - for iOS-14/Android-8 and higher
  - Bluetooth range 1.5 meter
  - guided installation
  - commissioning report
  - automatic updates
- 5 LED + 1 push button
- Master/slave setup for systems with shared outdoor temperature signal
- DIN rail, wall or panel mounting
- Inputs: 4 Pt 1000, 1 PWM, 1 pot. free
- Outputs:
  - 1x 3-point control output optimized for actuators
  - 1x Relay
  - 1x PWM
- Modbus RS 485 for longer distances
- Ethernet RJ 45 for e.g. Connection with Leanheat® Monitor

ECL 120 summary:

Intelligent, App controlled for single heating circuit.

ECL Comfort 210

Stand-alone controller for multiple heating and cooling applications with up to 2 circuits

- 2 control circuits + thermostatic function
- Intelligent ECL Application Keys, series A2xx
- Turn/push dial navigation
- Large graphical display with backlight
- More room for cabling
- Cable box and user interface can be separated
- 2x 3-point control outputs optimized for actuators
- 8 inputs: 6 Pt 1000, 2 configurable
- 4 relay outputs
- Data logging readout on display or via USB interface
- USB port for service
- Modbus RS485 for short cable distances
- Master/slave option
- Optimized for substations and operation in a system using Danfoss actuators, control valves, Pt 1000 sensors and pressure transmitters
- Optional ECA 30/31 Remote Control Unit

ECL 210 summary:

Basic requirements, high performance in district heating systems.

ECL Comfort 296

Controller with communication interfaces for applications with up to 2 circuits

In addition to the features of the ECL Comfort 210, the ECL Comfort 296 gives you:

- Integrated communication interfaces:
  - Modbus RS485 for longer distances
  - M-bus master dedicated for heat meters
  - Modbus TCP
  - Connection to ECL Portal – easy to install, access and adjust / monitor
- Smaller size, 144 x 96 mm
- Optional ECA 30/31 Remote Control Unit

ECL 296 summary:

For basic requirements, with communication and sized 144 x 96 mm.

ECL Comfort 310

Controller with communication interfaces for applications with up to 3 circuits

In addition to the features of the ECL Comfort 210, the ECL Comfort 310 gives you:

- 3 control circuits + thermostatic function
- Integrated communication interfaces:
  - USB interface for service
  - Modbus RS485 for longer distances
  - M-bus master dedicated for heat meters
  - Modbus TCP
- 10 input: 6 Pt 1000, 4 configurable
- 3x 3-point control output optimized for actuators
- 6 relay outputs
- Data logging readout on display or via communication interface
- Connection to ECL Portal – easy to install, access and adjust / monitor
- Optional ECA 30/31 Remote Control Unit

ECL 310 summary:

For high requirements – with communication and extension options, without programming.

Select ECL Comfort for your application

ECL COMFORT				ECL Application Key designation	Application and system type	Circuit types			Domestic hot water (DHW)		
ECL 120	ECL 210	ECL 296	ECL 310			Heating	Cooling	DHW	Storage with internal heat exchanger	Storage with charging	DHW control with HEX
■				A130	DH						
	■	■	■	A214	DH/DC (Vent)		✱				
	■	■	■	A217	DH						
	■	■	■	A230	DH/DC	[1]	✱ [1]				
	■	■	■	A231	DH						
	■	■	■	A232	DH/DC		✱				
	■	■	■	A237	DH						
	■	■	■	A247	DH						
	■	■	■	A260	DH						
	■	■	■	A266	DH						
	■	■	■	A275	BOILER						
			■	A319	DH						
			■	A333	DH						
			■	A361	DH						
			■	A362	DH						
			■	A367	DH						
			■	A368	DH						
			■	A376	DH						
			■	A377	DH						
			■	A390	DH	[1]	✱✱✱ [1]				

Legend for ECL Application Key designation:
A = Application Key (A130 built-in for ECL Comfort 120)
2 = Suitable for ECL Comfort 210, 296 and 310
3 = Only suitable for ECL Comfort 310
xx = Specific application type

Abbreviations: DH (district heating); DC (district cooling)
Notes: [1] = Either heating or cooling

ECL Comfort 310 extension options

For applications with extended requirement the additional internal I/O extension module ECA 32 and ECA 35 are available.

- For refill water and two pump function
- For analog (0 - 10 V) control of motorized control valves, dampers and rotating heat exchangers
- Extra signal inputs
- For analog (0 - 10 V) control of circulation pump speed
- For PWM signal based control of circulation, charging and control pump speed (ECA 35 only)

ECL accessories and temperature sensors

- Base part for mounting on wall or DIN rail
- Temperature sensors (Pt 1000)
  - Outdoor and room
  - Pipe surface and immersion

Index for applications keys

ECL Comfort 120	Application	Description	Page
■	A130 Heating circuit	Electronic temperature controller for weather compensated flow temperature control of directly or indirectly connected heating systems	15

ECL Comfort 210	ECL Comfort 296	ECL Comfort 310	Application	Description	Page
■	■	■	A214	**A214 also covering A314:** Multi purpose application. Temperature control of, for example, ventilation systems with heating or cooling or a combination of these. Weather based compensation, return temperature limitation, frost and fire protection. Optional analog control of cross-flow or rotary heat exchanger. Alarm function related to duct / flow temperature, fire and frost.	17
		■	(A314)		
■	■	■	A217	**A217 also covering A317:** Advanced temperature control of DHW circuit with storage tank, directly heated or charging system. Return temperature limitation. Optional temperature control of DHW heating temperature. Alarm function related to flow temperature.	31
		■	(A317)		
■	■	■	A230.1 Heating	Weather compensated control of flow temperature in a heating circuit. Room temperature and wind speed compensation. Sliding return temperature limitation. Alarm function related to flow temperature.	35
■	■	■	A230.2 Cooling	Control of flow temperature in a cooling circuit. Room and weather compensation. Return temperature limitation.	
■	■	■	A 230.4 Heating	Weather compensated control of flow temperature in a heating circuit. Room temperature compensation. Sliding return temperature and power / flow limitation. Alarm function related to flow temperature. Monitoring of temperatures in self-acting controlled DHW circuit.	
■	■	■	A231	**A231 also covering A331:** Weather compensated control of flow temperature in a heating circuit. Sliding return temperature limitation. Control of one or two circulation pumps. Optional control of flow temperature related to supply temperature. Refill water function. Alarm function related to flow temperature, pressure and circulation pumps operation. Additional function in A331: Control of one or two pumps for refill water function.	40
		■	(A331)		
■	■	■	A232	**A232 also covering A332:** Weather compensated flow temperature control of heating / cooling circuit(s). Automatic change-over between heating and cooling. Circulation pump control. Dew point (cooling mode only) and surface temperature compensation. Return temperature limitation.	42
		■	(A332)		
■	■	■	A237	**A237 also covering A337:** Weather compensated control of flow temperature in heating circuit. Room temperature compensation and sliding return temperature limitation. Temperature control in DHW circuit with storage tank, directly heated or charging system. Return temperature limitation. Possibility for DHW priority. Alarm function related to flow temperatures.	47
		■	(A337)		
■	■	■	A247	**A247 also covering A347:** Weather compensated control of flow temperature in heating circuit. Room temperature compensation and sliding return temperature limitation. Temperature control in DHW circuit with storage tank, directly heated or charging system. Return temperature limitation. Possibility for sliding DHW priority. Alarm function related to flow temperatures.	49
		■	(A347)		
■	■	■	A260	Weather compensated control of flow temperature in two heating circuits. Room temperature compensation and sliding return temperature limitation. Circuits independent in parallel or circuit 2 after circuit 1. Alarm function related to flow temperatures.	55
■	■	■	A266	Weather compensated control of flow temperature in heating circuit. Room temperature compensation and sliding return temperature limitation. Flow temperature control in DHW circuit. Return temperature limitation. Sliding DHW priority possibility. Optional DHW temperature control related to DHW flow detection. Alarm function related to flow temperatures.	57
■	■	■	A275	**A275 also covering A375:** Weather compensated flow temperature control of 1-stage boiler based heating systems. One direct heating circuit and one mixing circuit. Circulation pumps control, room temperature control and sliding return temperature limitation. Temperature control of DHW storage tank with internal heat exchanger. Frost protection and alarm function. The A275 application key contains applications related to ECL Comfort 310 for increased functionalities (multiple boiler stages).	59
		■	(A375)		

ECL Comfort 210	ECL Comfort 296	ECL Comfort 310	Application	Description	Page
		■	A319	Weather compensated control of flow temperature in a heating circuit, based on an advanced buffer temperature control. Charging pump is speed controlled, based on 0 - 10 Volt or PWM (Pulse Width Modulated) signal. Discharging of buffer is avoided according to built-in logic. Differential pressure can be maintained by means of speed controlled circulation pump (0 - 10 Volt or PWM). Optional sliding return temperature limitation. Relay output present for buffer heating demand; override signal for remote setting of desired flow temperature. Alarm functions are related to flow and buffer temperatures.	68
		■	A333	Weather compensated control of flow temperature in heating circuit. Sliding return temperature limitation. Control of one or two circulation pumps. Refill water function for one or two pumps and refill water storage control. Pressure and temperature monitoring functions. Alarm function related to flow temperature, pressure and circulation pumps operation.	69
		■	A361	Weather compensated control of flow temperature in two heating circuits. Sliding return temperature limitation. Control of one or two circulation pumps in each heating circuit. Optional control of flow temperature related to supply temperature. Refill water function. Alarm function related to flow temperature, pressure and circulation pumps operation.	70
		■	A362	Weather compensated control of flow temperature in a heating circuit, based on advanced cascade control of 2 heat exchangers (HEX). Control valve characteristics are taken into consideration and flow in unused HEX circuit can be stopped. Optional sliding return temperature limitation. Scheduled shift for inversed cascade (HEX-1 - HEX-2 and HEX-2 - HEX-1) can be set. Override inputs for start of HEX-1 and HEX-2 are available. M-Bus based signal can be used for flow / energy limitation. Up to 6 heat exchangers can be cascade controlled by 1, 2 or 3 ECL Comfort 310 controllers, each equipped with the application key A362; the ECL controllers are interconnected by means of the ECL 485 Bus. Alarm functions are related to flow and flow temperatures.	71
		■	A367	Weather compensated control of flow temperature in two heating circuits. Room temperature compensation and sliding return temperature limitation. Heating circuits work independent in parallel or circuit 2 after circuit 1. Temperature control in DHW circuit with storage tank, directly heated or charging system. Return temperature limitation. DHW priority. Alarm function related to flow temperatures.	74
		■	A368	Weather compensated control of flow temperature in heating circuit. Sliding return temperature limitation. Control of one or two circulation pumps. Optional control of flow temperature related to supply temperature. Refill water function for one or two pumps. Flow temperature control in DHW circuit. Return temperature limitation. Sliding DHW priority possibility. Control of one or two circulation pumps. Alarm function related to flow temperature, pressure and circulation pumps operation.	77
		■	A376	Weather compensated control of flow temperature in two heating circuits. Room temperature compensation and sliding return temperature limitation. Heating circuits work independent in parallel or circuit 2 after circuit 1. Flow temperature control in DHW circuit. Return temperature limitation. Sliding DHW priority possibility. Optional DHW temperature control related to DHW flow detection. Alarm functions related to flow temperatures, pressures and extra alarm input. Optional control of motorized control valves by means of analog signal (0 - 10 volt).	79
		■	A377	Weather compensated control of flow temperature in two heating circuits. Room temperature compensation and sliding return temperature limitation. Heating circuits work independent in parallel or circuit 2 after circuit 1. Temperature control in DHW circuit with storage tank, directly heated or charging system. Return temperature limitation. DHW priority. Optional temperature control of DHW heating temperature. Alarm function related to flow temperatures.	83
		■	A390	Weather compensated control of flow temperature in up to three heating circuits. Room temperature compensation and sliding return temperature limitation. Heating circuits work independent in parallel or circuit 2 and 3 after circuit 1. Control of flow temperature in up to three cooling circuits. Room temperature compensation and return temperature limitation. Cooling circuits work independent in parallel or circuit 2 and 3 after circuit 1. Temperature control of DHW tank charging circuit. Control of DHW heating temperature. Return temperature limitation. DHW priority possibility. Alarm functions related to flow temperatures. Optional control of motorized control valves by means of analog signal, 0 - 10 volt, (3 x heating circuits only).	86

ECL Comfort 120 + ECL Go App Application A130

Flow temperature control based on outdoor temperature.

A130.1

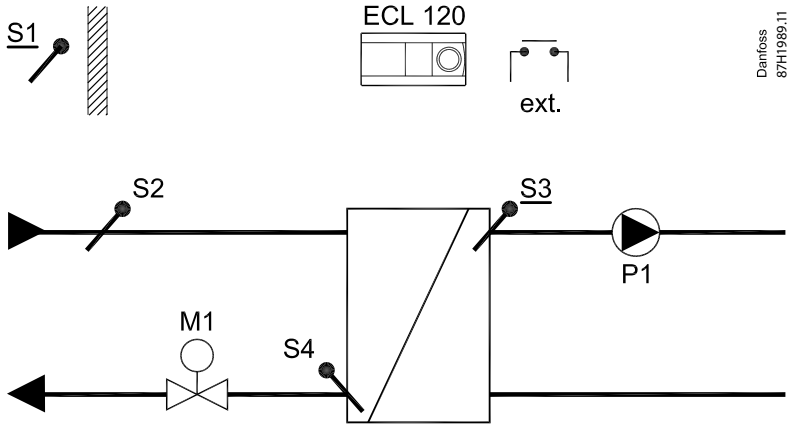

Example a

District heating circuit with heat exchanger (indirect connected heating circuit).

A130.1

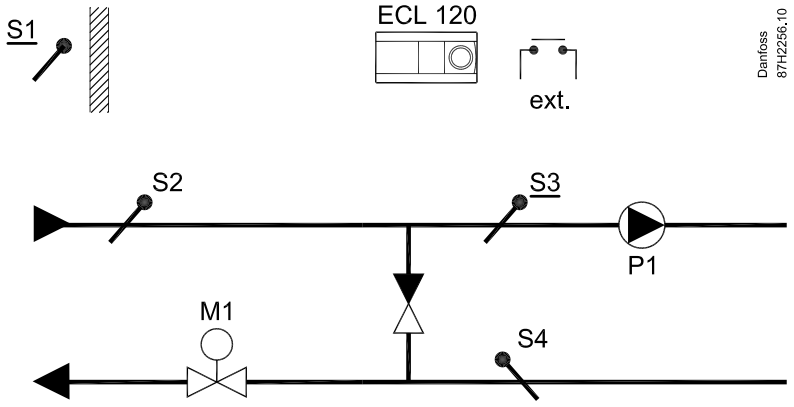

Example b

Direct connected district heating circuit.

A130.1

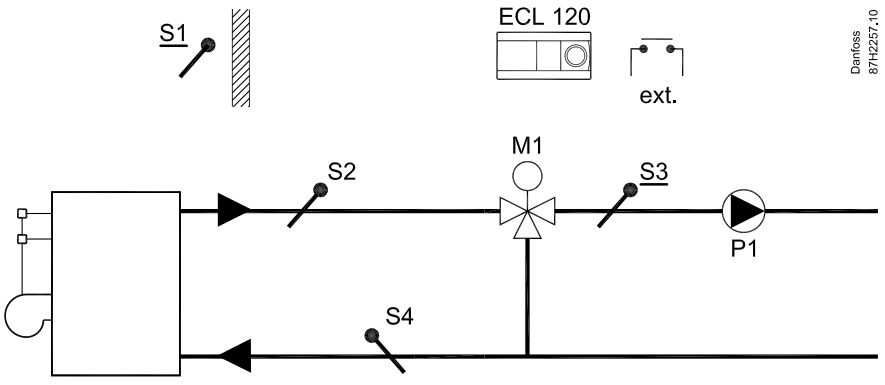

Example c

Boiler based heating circuit.

ECL Comfort 120 + ECL Go App Application A130

Flow temperature based on room thermostat (on/off).

A130.2

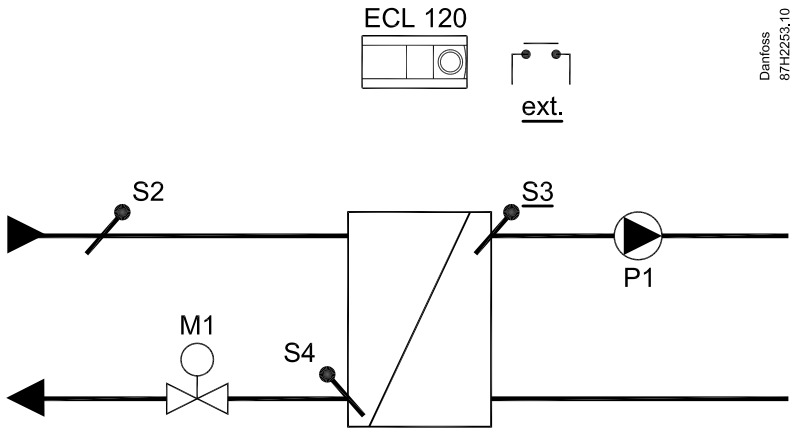

Heating controlled on/off via a room thermostat and the heating circuit is supplying a fixed flow temperature.

Flow temperature compensated on room sensor.

A130.3

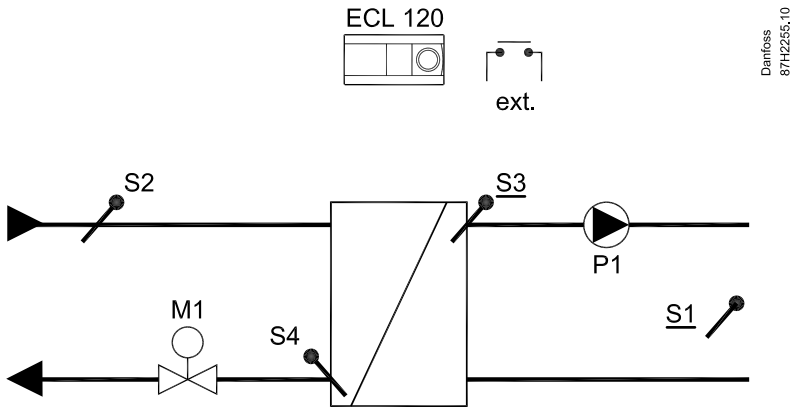

Heating circuit with heat exchanger and room temperature compensated flow temperature. Alternatively, this could be a direct connection to a district heating network as well as supplied from a boiler.

Flow temperature based on compensated supply temperature (offset).

A130.4

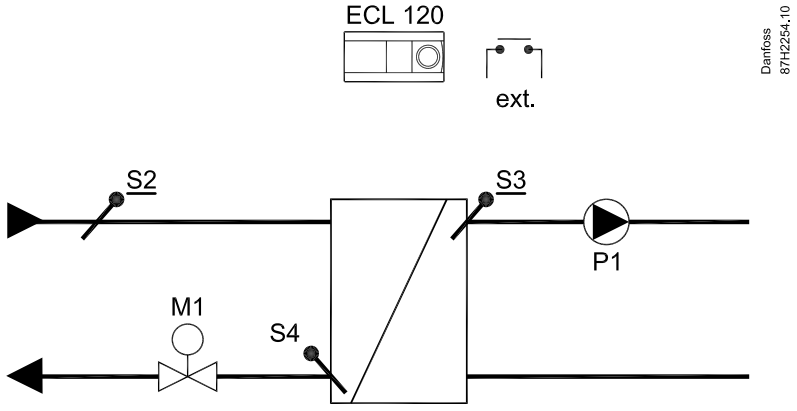

Heating circuit with heat exchanger and the flow temperature compensated according to the temperature in the supply line.

ECL Comfort 210/296/310 Application A214/A314

Multi purpose application. Temperature control of, for example, ventilation systems with heating or cooling or a combination of these. Weather based compensation, return temperature limitation, frost and fire protection. Optional analog control of cross-flow or rotary heat exchanger.
Alarm function related to duct / flow temperature, fire and frost.

A214.1

Example a

Ventilation system with cooling and constant room temperature control.

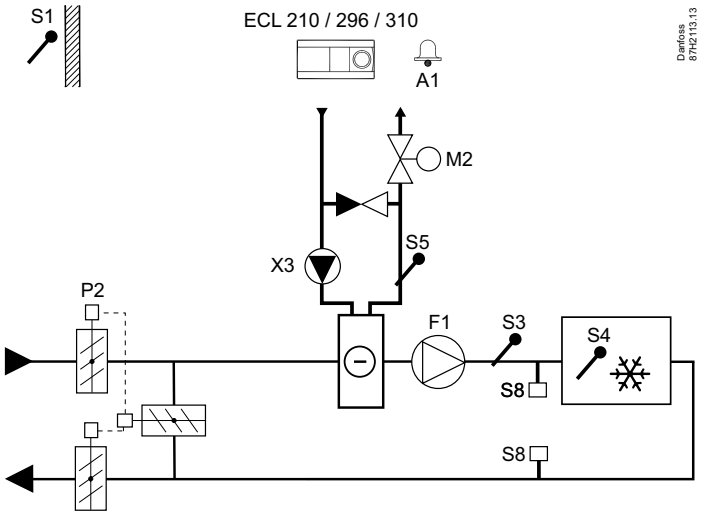

A214.1

Example b

Ventilation system with cooling and constant room temperature control. Chiller has constant flow.

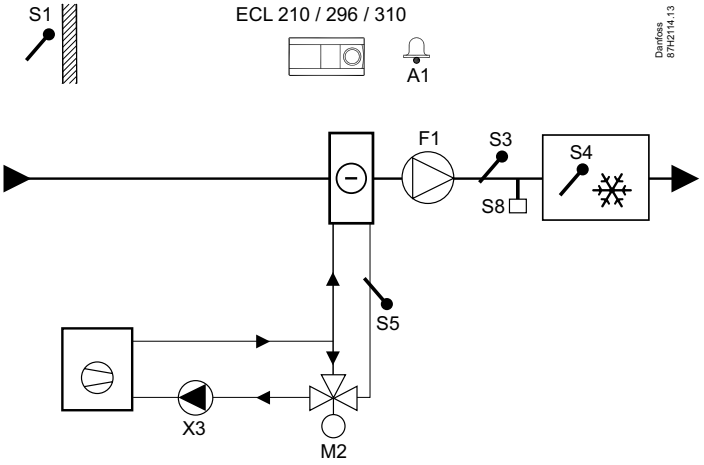

A214.1

Example c

Ventilation system (fan coils) with cooling and constant room temperature control.

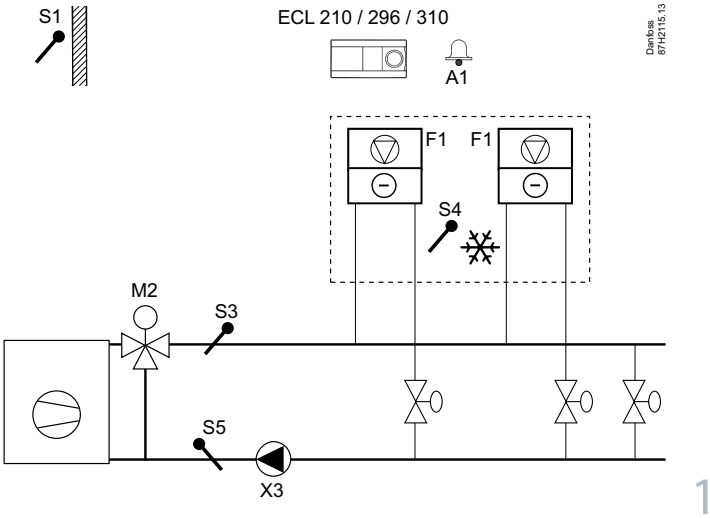

ECL Comfort 210/296/310 Application A214/A314

Multi purpose application. Temperature control of, for example, ventilation systems with heating or cooling or a combination of these. Weather based compensation, return temperature limitation, frost and fire protection. Optional analog control of cross-flow or rotary heat exchanger.
Alarm function related to duct / flow temperature, fire and frost.

A214.1

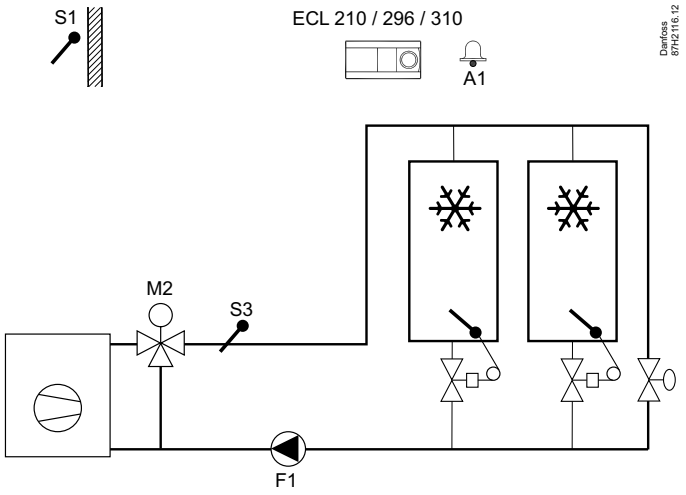

Example d

Cooling system with constant flow temperature control.

A214.1

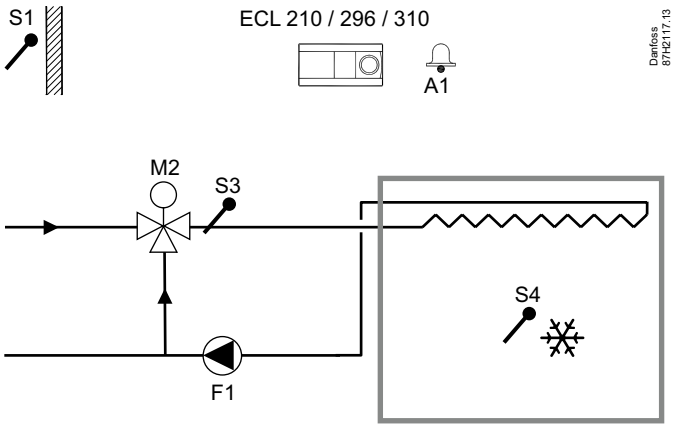

Example e

Cooling system in ceiling and constant room temperature control in for example a wine cellar.

A214.2

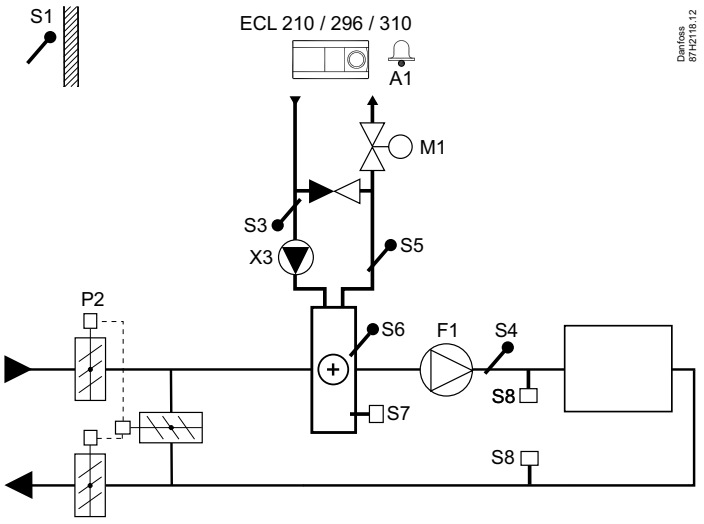

Example a

Ventilation system with heating and constant duct temperature control.

A214.2

Example b

Heating of a swimming pool, constant water temperature control.

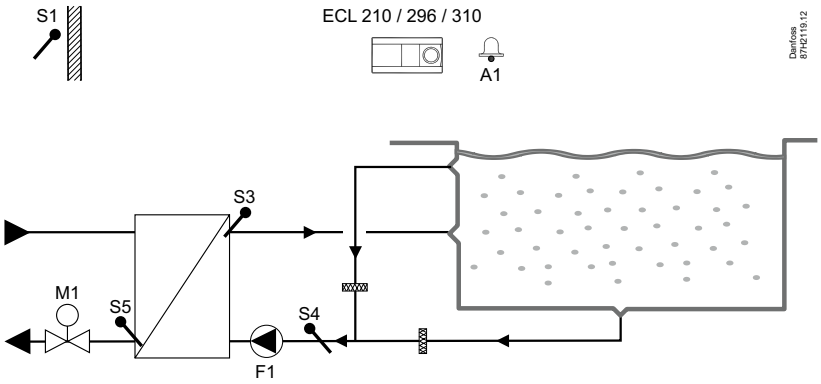

A214.3

Example a

Ventilation system with heating and constant room temperature control.

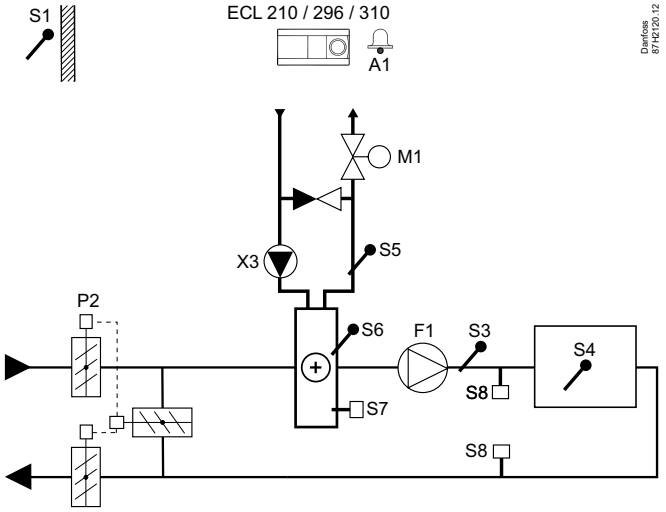

A214.3

Example b

Ventilation system (fan coils) with heating and constant room temperature control.

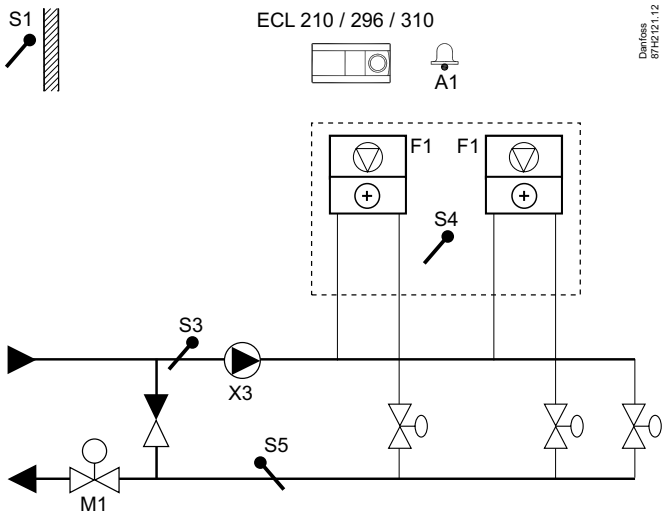

ECL Comfort 210/296/310 Application A214/A314

Multi purpose application. Temperature control of, for example, ventilation systems with heating or cooling or a combination of these. Weather based compensation, return temperature limitation, frost and fire protection. Optional analog control of cross-flow or rotary heat exchanger.
Alarm function related to duct / flow temperature, fire and frost.

A214.4

Example a

Ventilation system with heating, cooling and constant duct temperature control.

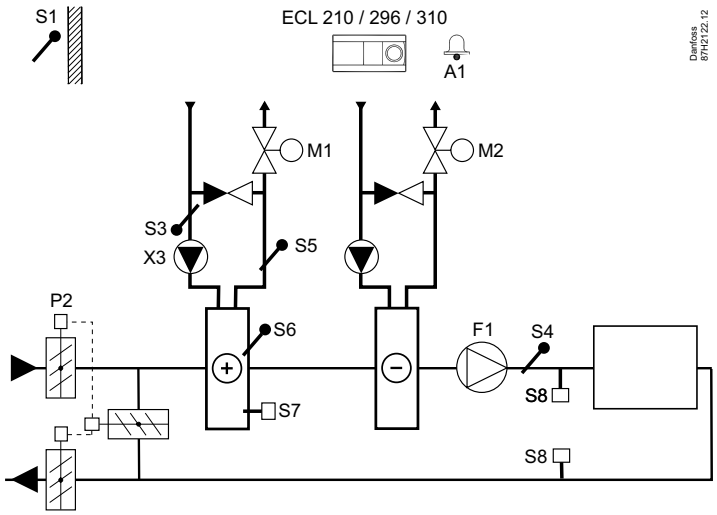

A214.4

Example b

Ventilation system with heating, passive cooling (outside air) and constant duct temperature control.

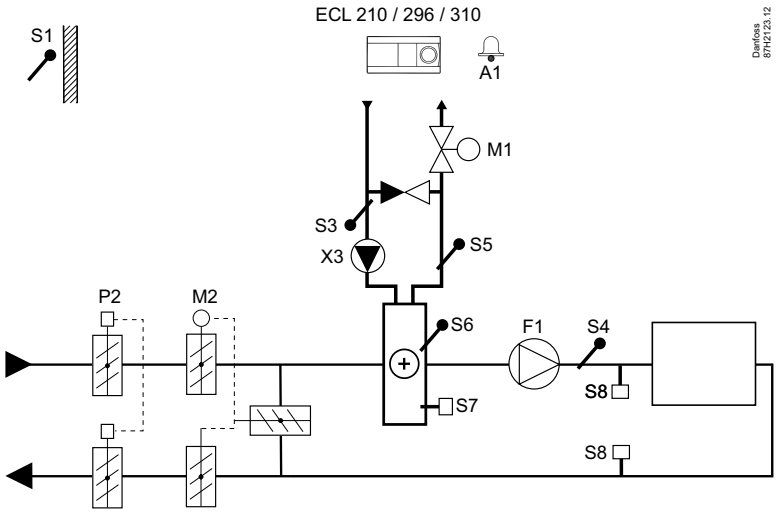

A214.5

Example a

Ventilation system with heating, cooling and constant room temperature control.

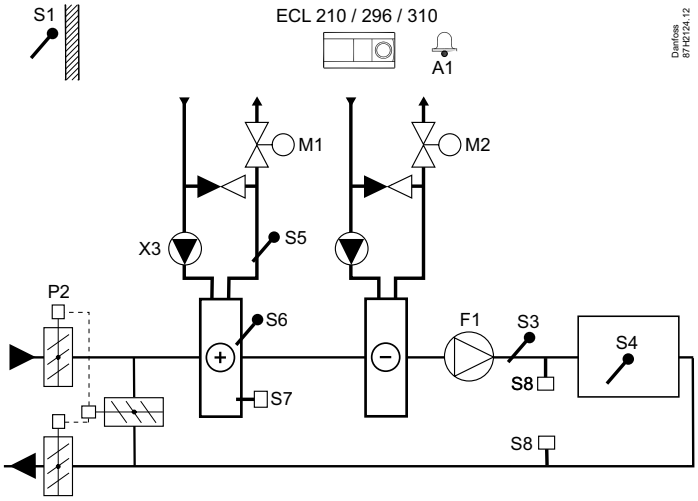

A214.5

Example b

Ventilation system with heating, passive cooling (outside air) and constant room temperature control.

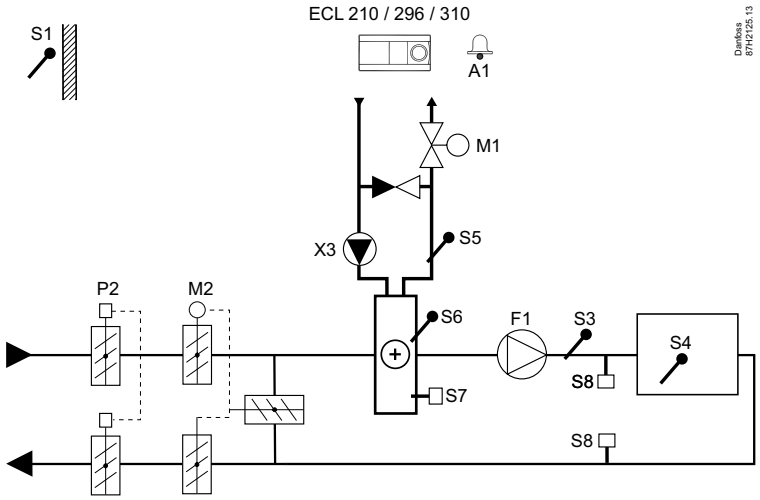

A214.5

Example c

Ventilation system with heating, cross-flow heat exchanger control and constant room temperature control.

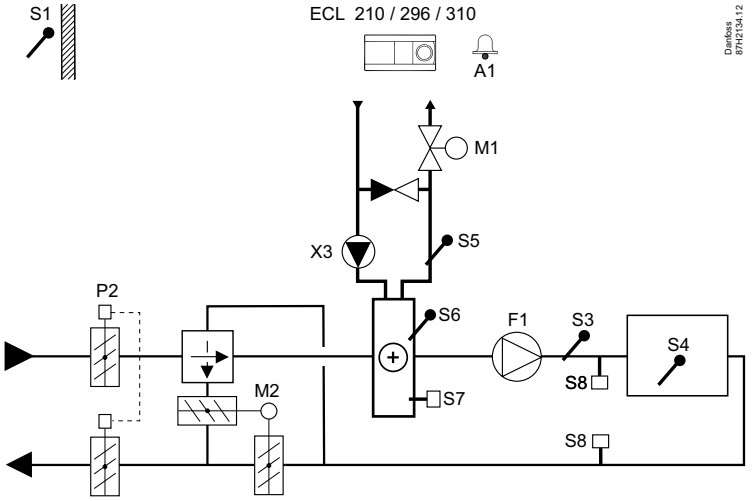

ECL Comfort 210/296/310 Application A214/A314

Multi purpose application. Temperature control of, for example, ventilation systems with heating or cooling or a combination of these. Weather based compensation, return temperature limitation, frost and fire protection. Optional analog control of cross-flow or rotary heat exchanger.
Alarm function related to duct / flow temperature, fire and frost.

A214.6

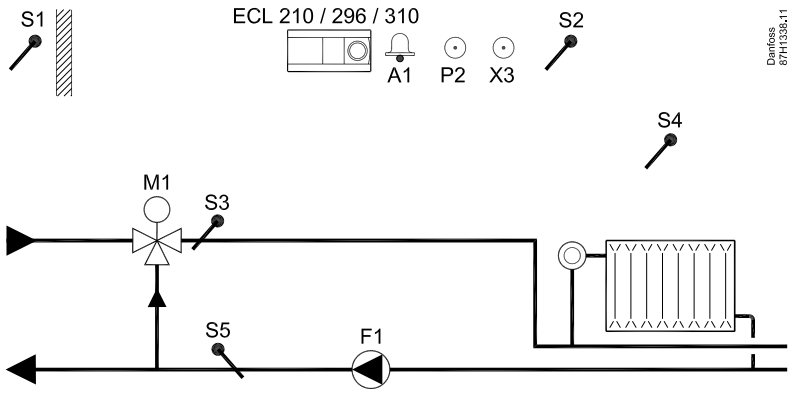

Example a

Heating system with 3-port mixing valve

A214.6

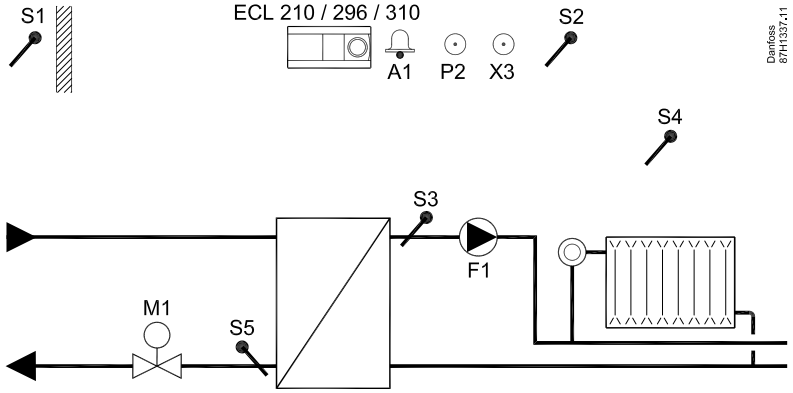

Example b

Heating system with heat exchanger

A314.1

Example a

Ventilation system with heating, passive cooling (outside air) and constant duct temperature control. Analog controlled passive cooling (M2).

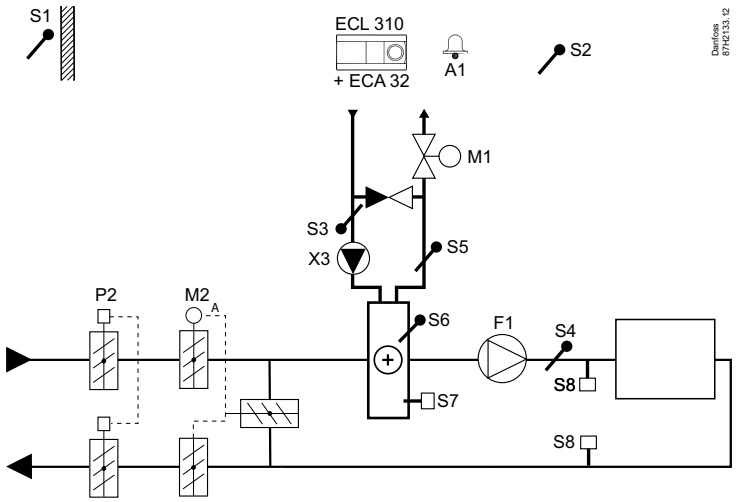

A314.1

Example b

Ventilation system with heating, cooling and constant duct temperature control. Analog controlled cooling (M2).

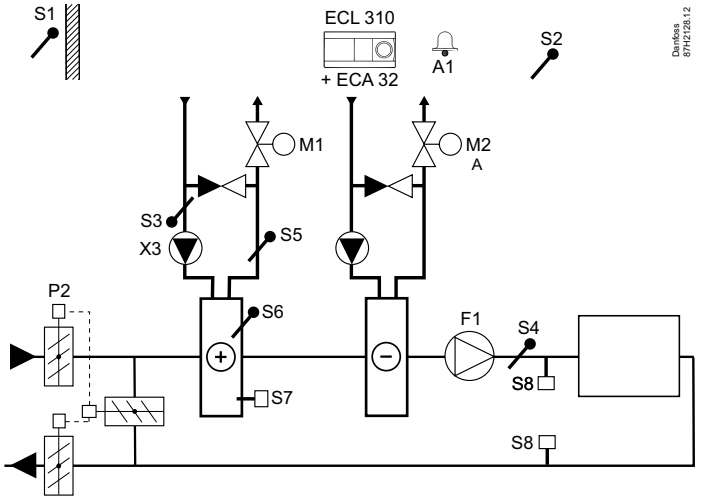

A314.2

Example a

Ventilation system with heating, passive cooling (outside air) and constant room temperature control. Analog controlled passive cooling (M2).

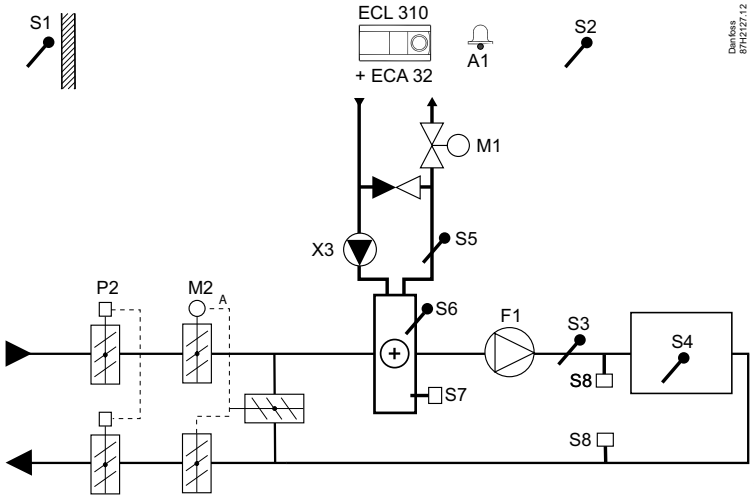

ECL Comfort 210/296/310 Application A214/A314

Multi purpose application. Temperature control of, for example, ventilation systems with heating or cooling or a combination of these. Weather based compensation, return temperature limitation, frost and fire protection. Optional analog control of cross-flow or rotary heat exchanger.
Alarm function related to duct / flow temperature, fire and frost.

A314.2

Example b

Ventilation system with heating, cooling and constant room temperature control. Analog controlled cooling (M2).

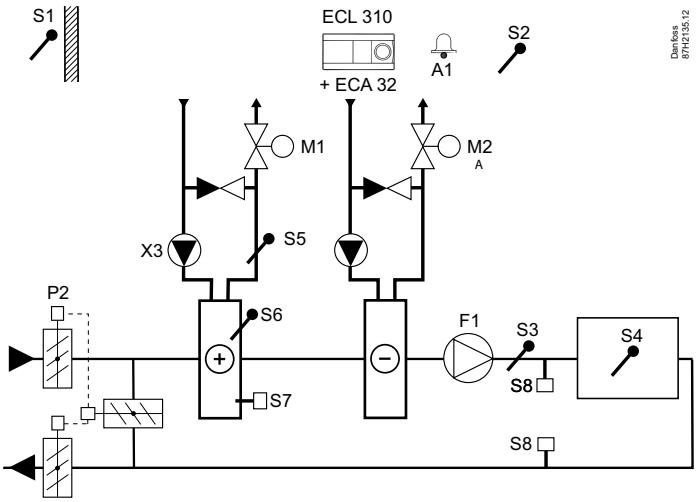

A314.3

Example a

Ventilation system with heating and constant room temperature control. Analog controlled fan speed (V1) based on outdoor wind speed.

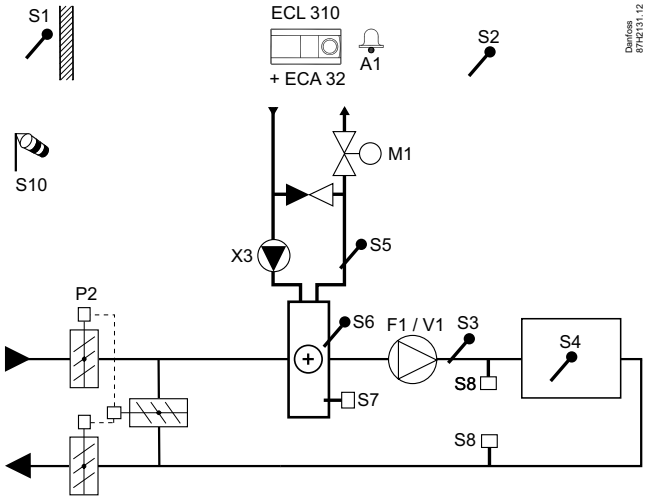

A314.3

Example b

Ventilation system with heating and constant room temperature control. Analog controlled air curtain (V1) speed based on outdoor wind speed.

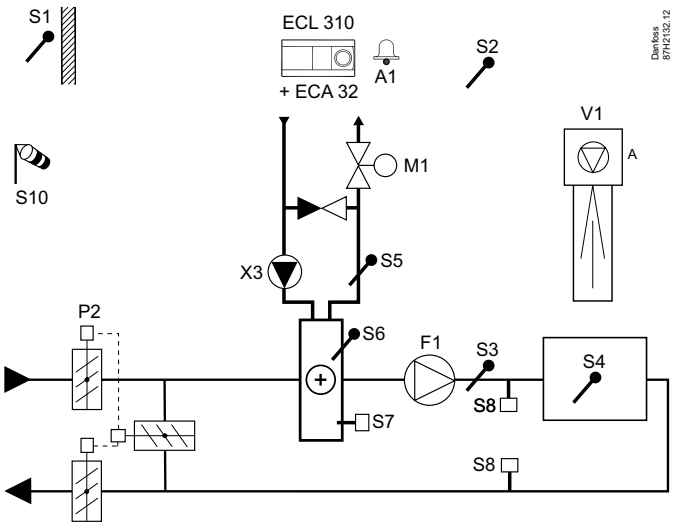

A314.4

Example a

Ventilation system with heating, passive cooling (outside air) and room temperature control. Analog controlled speed of fans in relation to pressures. Analog controlled speed of rotary heat exchanger (M2) for heat recovery.

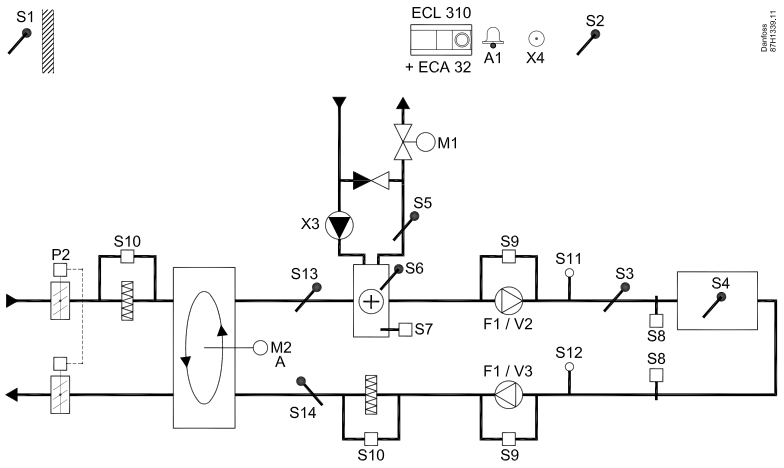

A314.4

Example b

Ventilation system with heating, passive cooling (outside air) and room temperature control. Analog controlled speed of fans in relation to pressures. Analog controlled damper (M2) for heat recovery by means of a cross heat exchanger.

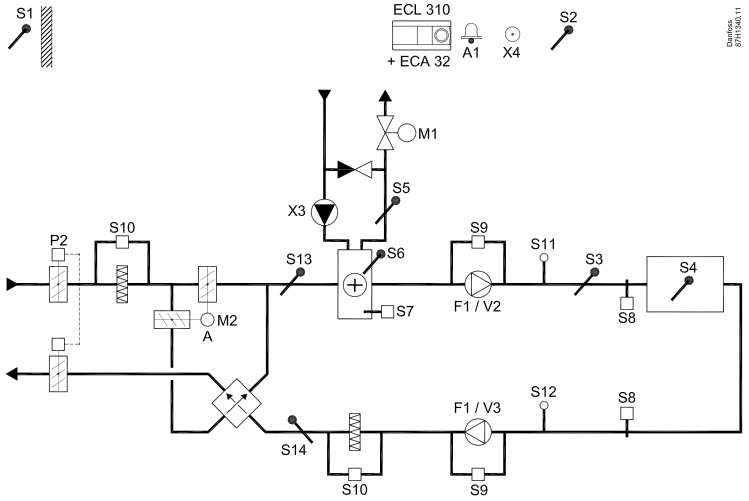

A314.4

Example c

Ventilation system with heating, passive cooling (outside air) and room temperature control. Analog controlled speed of fans in relation to pressures. Analog controlled speed of rotary heat exchanger (M2) for heat recovery. Control of Night damper P8 for reduced ventialtion during saving periods.

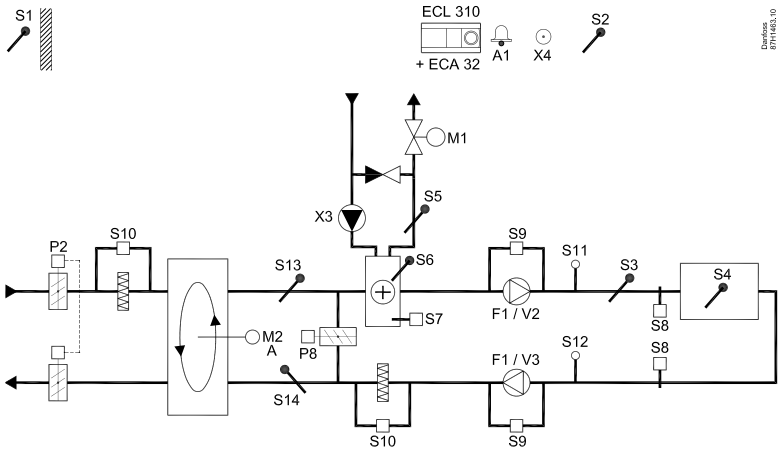

ECL Comfort 210/296/310 Application A214/A314

Multi purpose application. Temperature control of, for example, ventilation systems with heating or cooling or a combination of these. Weather based compensation, return temperature limitation, frost and fire protection. Optional analog control of cross-flow or rotary heat exchanger.
Alarm function related to duct / flow temperature, fire and frost.

A314.4
Example d

Ventilation system with heating, passive cooling (outside air) and room temperature control. Analog controlled speed of fans in relation to pressures. Analog controlled damper (M2) for heat recovery by means of a cross heat exchanger. Control of Night damper P8 for reduced ventilation during saving periods.

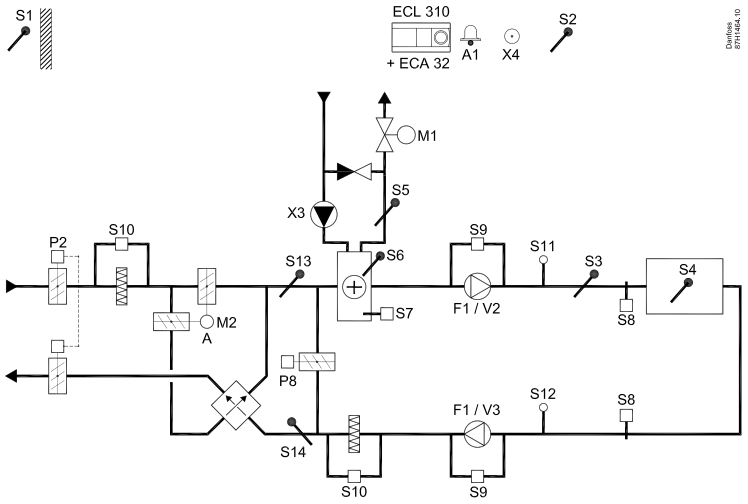

A314.4
Example e

Ventilation system with heating, passive cooling (outside air) and room temperature control. Analog controlled speed of fans in relation to pressures. Analog controlled valve (M2) for heat recovery by means of a Fluid battery. Control of Night damper P8 for reduced ventilation during saving periods.

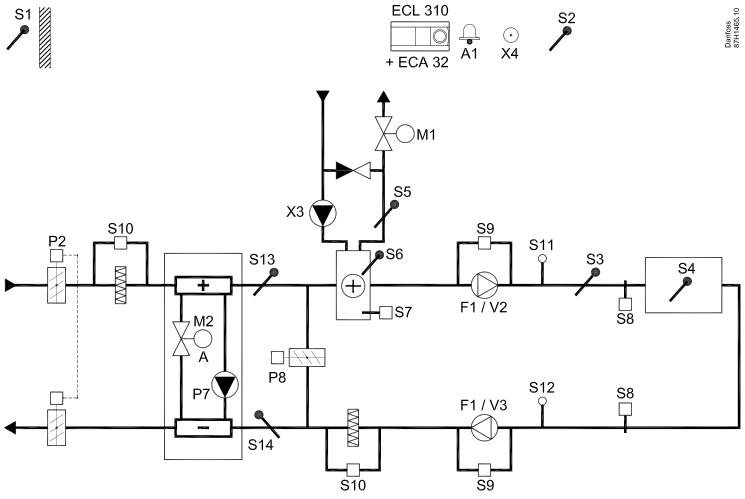

A314.5
Example a

Ventilation system with heating, passive cooling (outside air) and room temperature control. Analog controlled speed of fans in relation to air quality (CO2). Analog controlled speed of rotary heat exchanger (M2) for heat recovery.

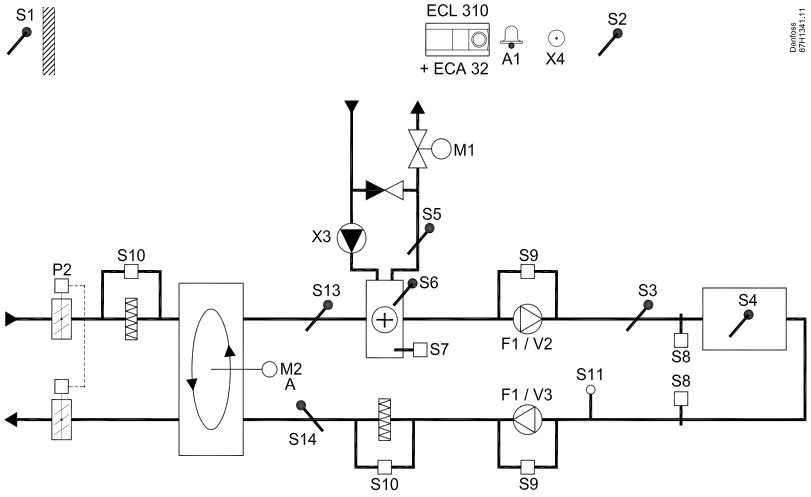

< back to index

A314.5

Example b

Ventilation system with heating, passive cooling (outside air) and room temperature control. Analog controlled speed of fans in relation to air quality (CO2). Analog controlled damper (M2) for heat recovery by means of a cross heat exchanger.

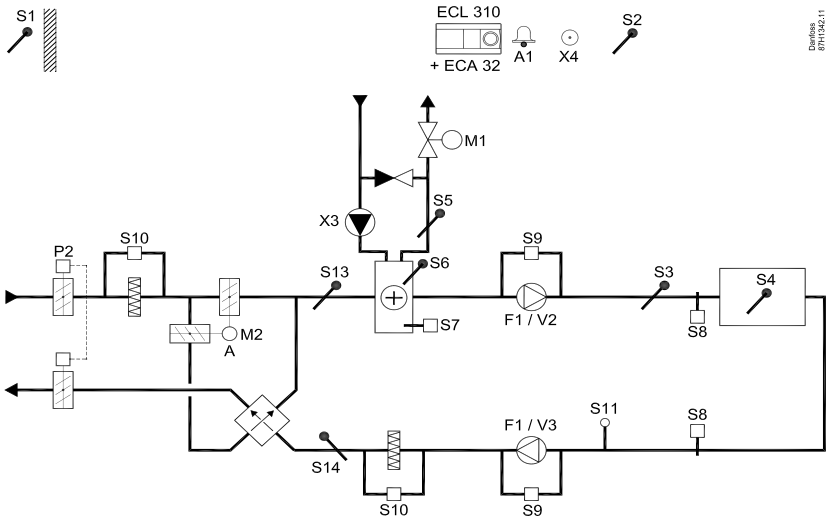

A314.5

Example c

Ventilation system with heating, passive cooling (outside air) and room temperature control. Analog controlled speed of fans in relation to air quality (CO2). Analog controlled speed of rotary heat exchanger (M2) for heat recovery. Control of Night damper P8 for reduced ventilation during saving periods.

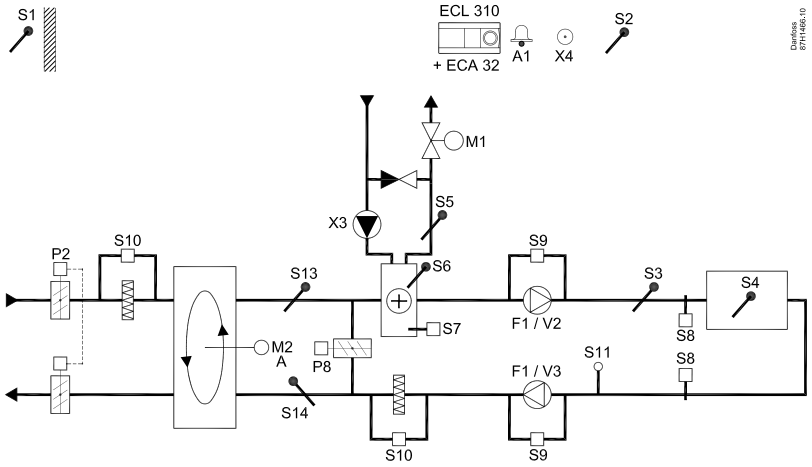

A314.5

Example d

Ventilation system with heating, passive cooling (outside air) and room temperature control. Analog controlled speed of fans in relation to air quality (CO2). Analog controlled damper (M2) for heat recovery by means of a cross heat exchanger. Control of Night damper P8 for reduced ventilation during saving periods.

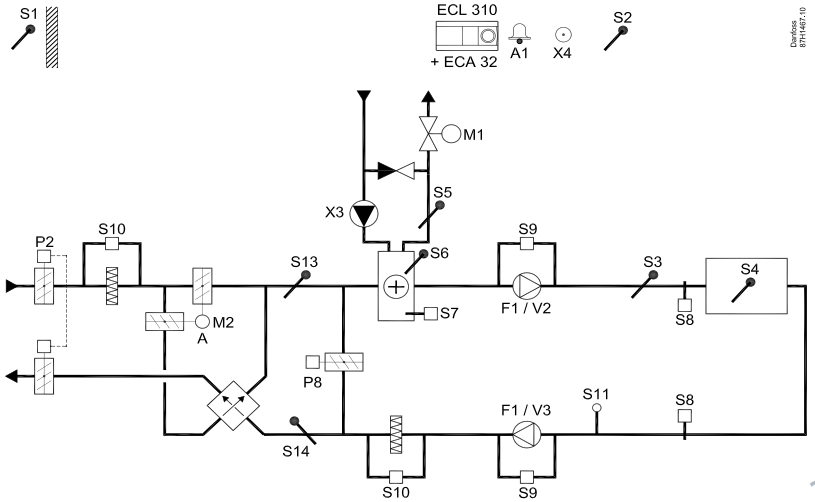

ECL Comfort 210/296/310 Application A214/A314

Multi purpose application. Temperature control of, for example, ventilation systems with heating or cooling or a combination of these. Weather based compensation, return temperature limitation, frost and fire protection. Optional analog control of cross-flow or rotary heat exchanger.
Alarm function related to duct / flow temperature, fire and frost.

A314.5

Example e

Ventilation system with heating, passive cooling (outside air) and room temperature control. Analog controlled speed of fans in relation to air quality (CO2). Analog controlled valve (M2) for heat recovery by means of a Fluid battery. Control of Night damper P8 for reduced ventilation during saving periods.

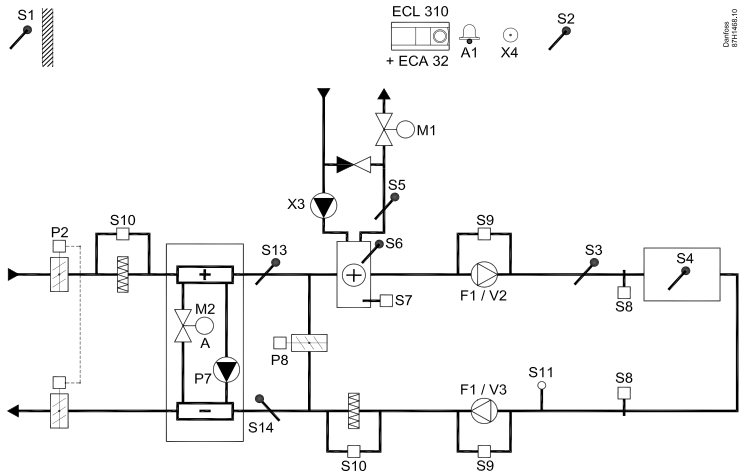

A314.6

Example a

Ventilation system with heating, cooling and room temperature control. Analog controlled speed of fans in relation to pressures. Analog controlled speed of rotary heat exchanger (M2) for heat recovery.

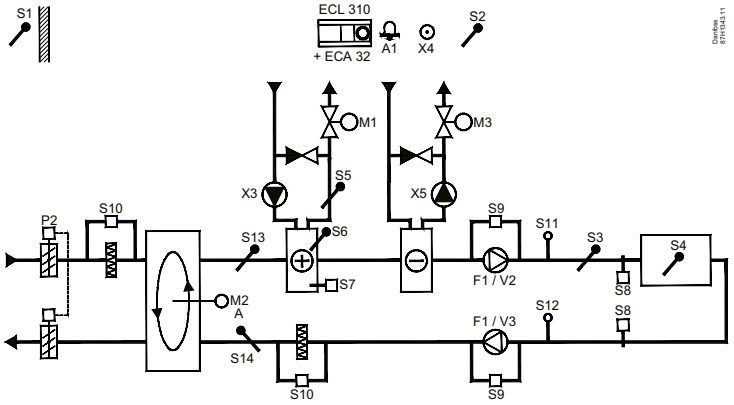

A314.6

Example b

Ventilation system with heating, cooling and room temperature control. Analog controlled speed of fans in relation to pressures. Analog controlled damper (M2) for heat recovery by means of a cross heat exchanger.

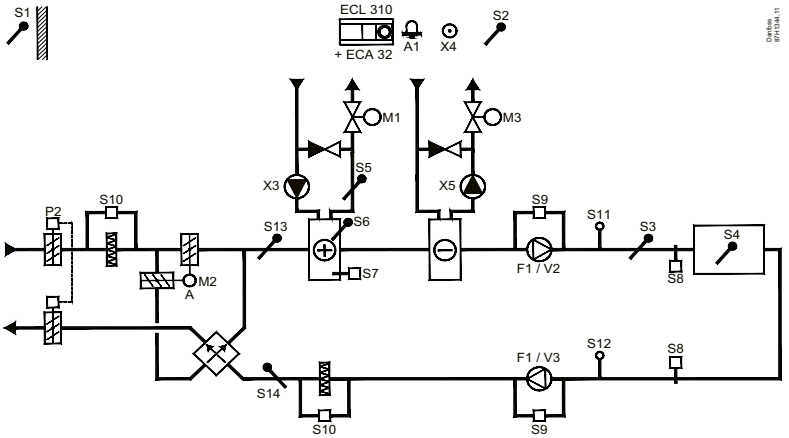

A314.6

Example c

Ventilation system with heating, cooling and room temperature control. Analog controlled speed of fans in relation to pressures. Analog controlled valve (M2) for heat recovery by means of a Fluid battery.

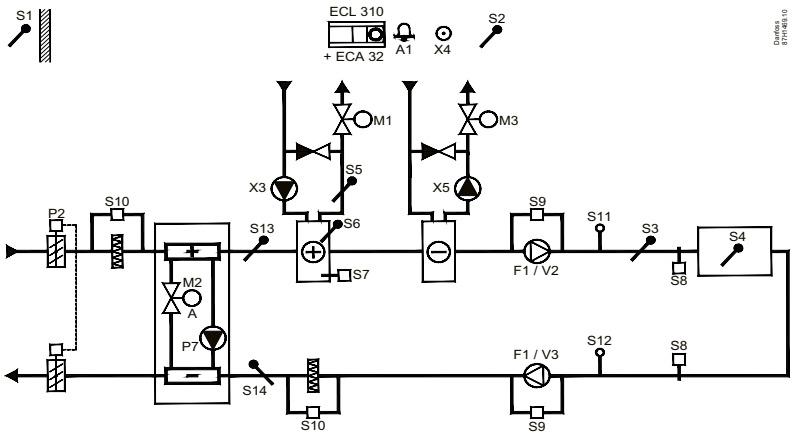

A314.7

Example a

Ventilation system with heating, cooling and room temperature control. Analog controlled speed of fans in relation to air quality (CO2). Analog controlled speed of rotary heat exchanger (M2) for heat recovery.

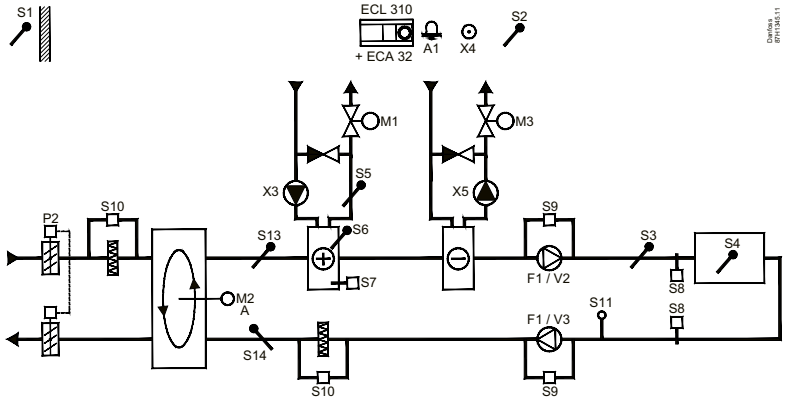

A314.7

Example b

Ventilation system with heating, cooling and room temperature control. Analog controlled speed of fans in relation to air quality (CO2). Analog controlled damper (M2) for heat recovery by means of a cross heat exchanger.

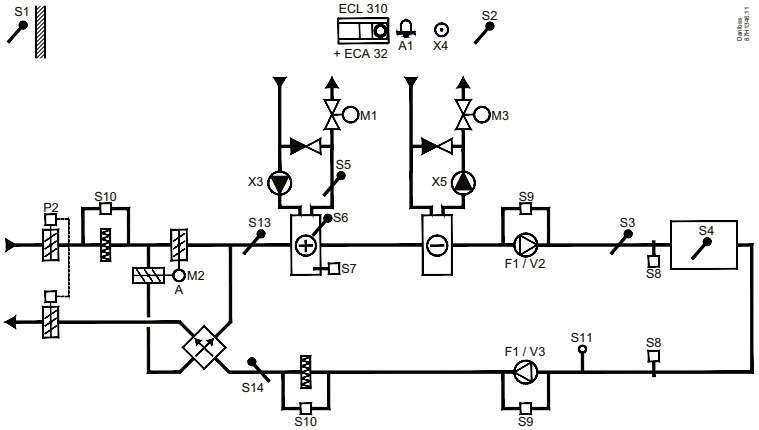

ECL Comfort 210/296/310 Application A214/A314

Multi purpose application. Temperature control of, for example, ventilation systems with heating or cooling or a combination of these. Weather based compensation, return temperature limitation, frost and fire protection. Optional analog control of cross-flow or rotary heat exchanger.
Alarm function related to duct / flow temperature, fire and frost.

A314.7

Example c

Ventilation system with heating, cooling and room temperature control. Analog controlled speed of fans in relation to air quality (CO2). Analog controlled valve (M2) for heat recovery by means of a Fluid battery.

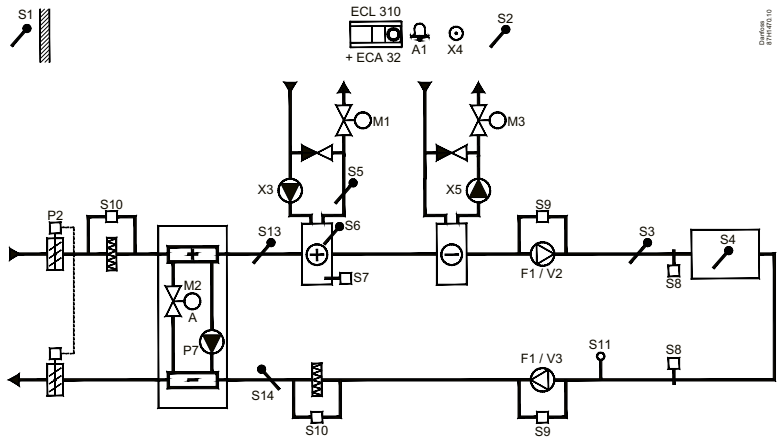

A314.9

Example a

Ventilation system with heating and room temperature control. Analog controlled speed of fans in relation to air quality (CO2).

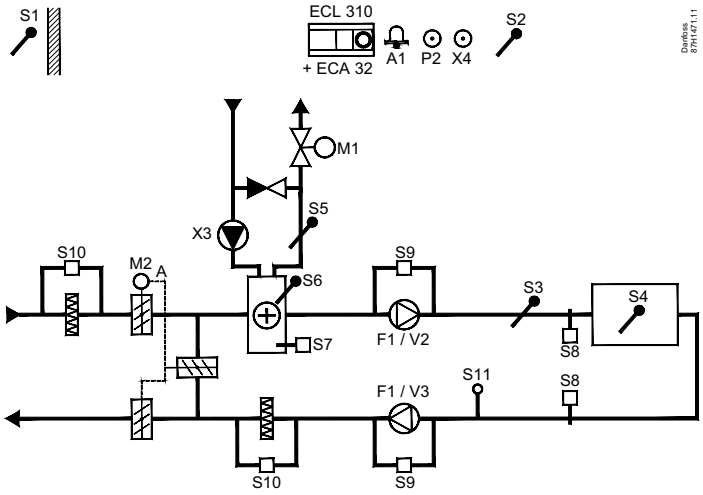

A314.9

Example b

Ventilation system with heating and room temperature control. Analog controlled speed of fans in relation to air quality (CO2). ON-OFF control of damper P2.

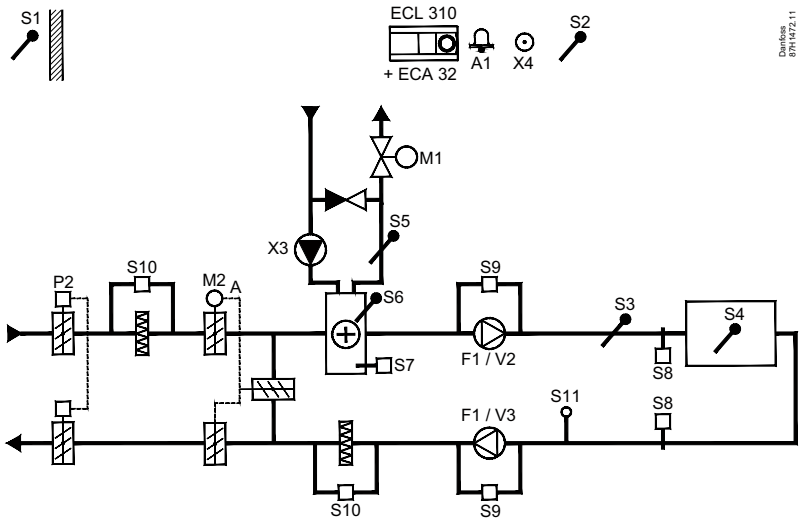

ECL Comfort 210/296/310 Application A217/A317

Advanced temperature control of DHW circuit with storage tank, directly heated or charging system. Return temperature limitation. Optional temperature control of DHW heating temperature.
Alarm function related to flow temperature.

A217.1 / A317.1

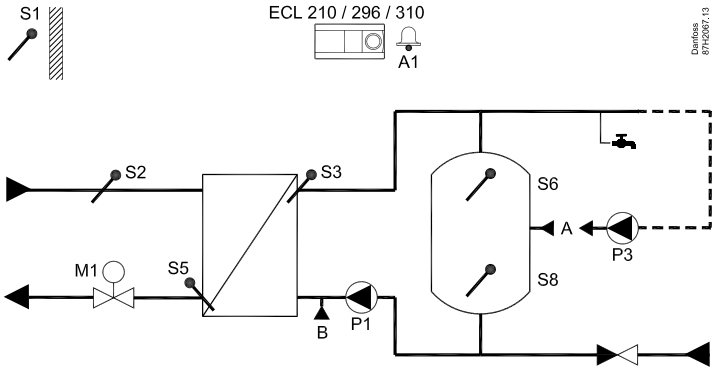

Example a

Indirectly connected DHW charging system. DHW circulation through DHW tank (A) or heat exchanger (B).

A217.1 / A317.1

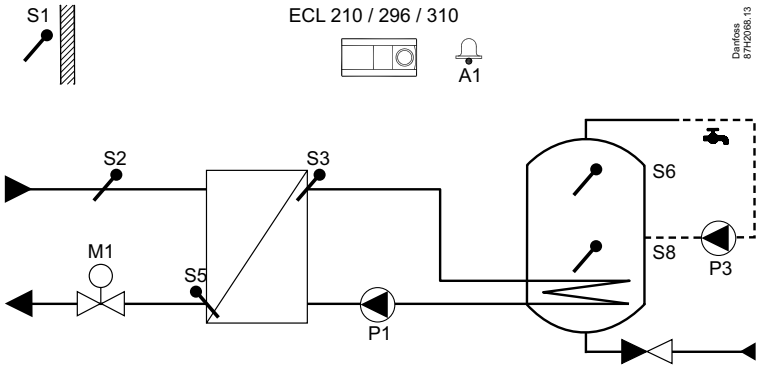

Example b

Indirectly connected DHW heating system.

A217.1 / A317.1

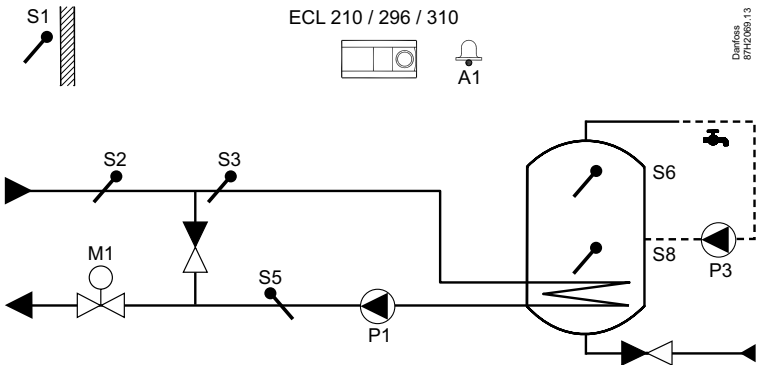

Example c

Directly connected DHW heating system.

ECL Comfort 210 Application A217

Advanced temperature control of DHW circuit with storage tank, directly heated or charging system. Return temperature limitation. Optional temperature control of DHW heating temperature.
Alarm function related to flow temperature.

A217.1 / A317.1

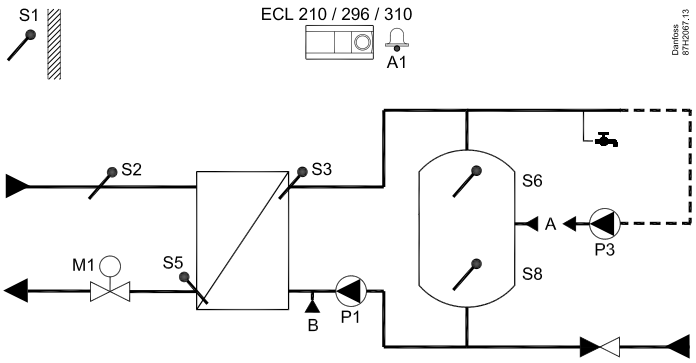

Example d

Directly connected DHW heating system.

A217.2 / A317.2

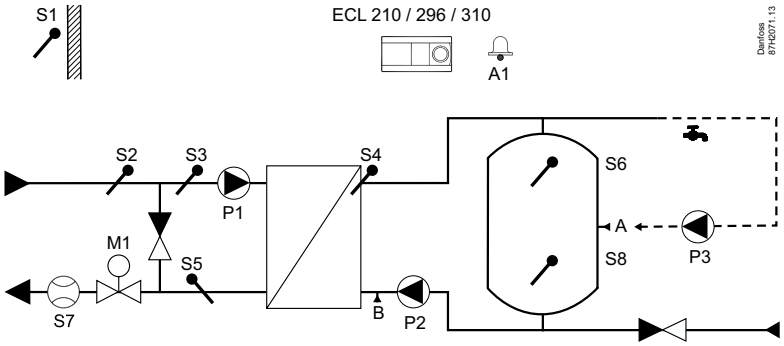

Example a

Indirectly connected DHW charging system with controlled heating temperature. DHW circulation through DHW tank (A) or heat exchanger (B).

A217.2 / A317.2

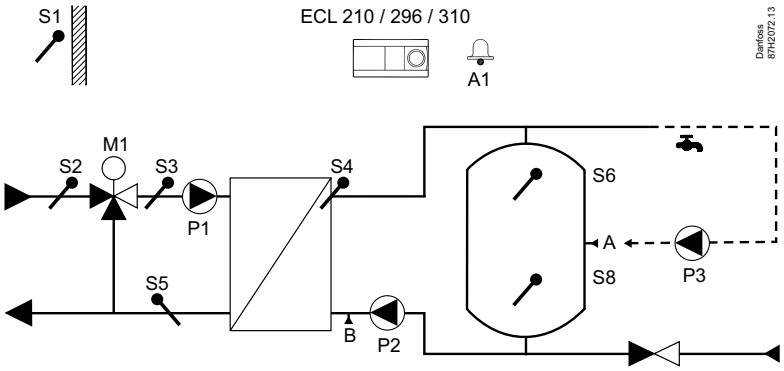

Example b

Indirectly connected DHW charging system with controlled heating temperature. DHW circulation through DHW tank (A) or heat exchanger (B).

A217.3

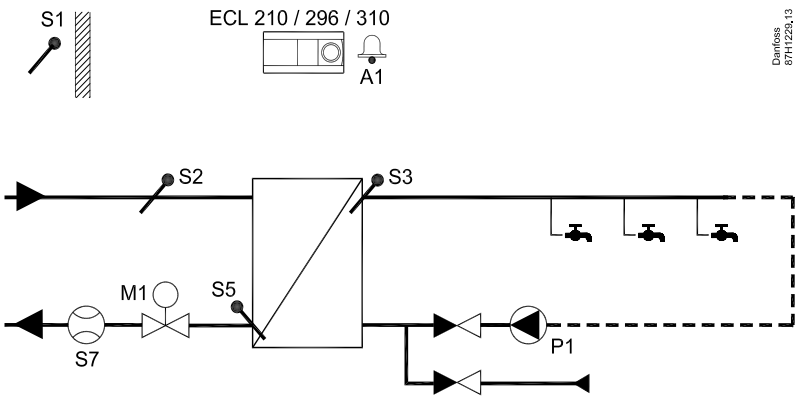

Example a

Indirectly connected DHW heating system. DHW circulation through heat exchanger.

A217.3

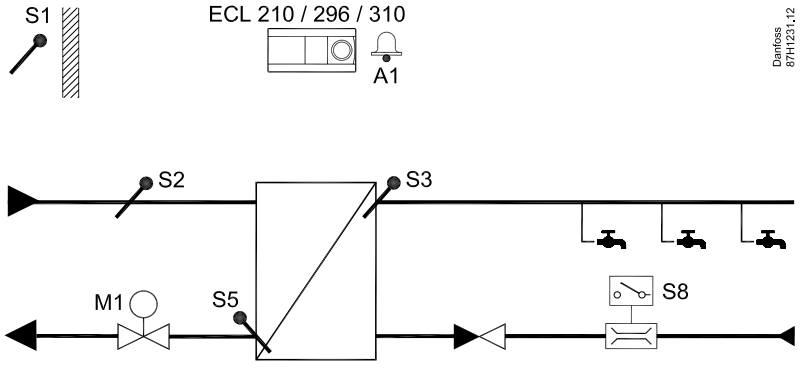

Example b

Indirectly connected DHW heating system. DHW heating on demand via flow switch (S8).

ECL Comfort 210 Application A217

Advanced temperature control of DHW circuit with storage tank, directly heated or charging system. Return temperature limitation. Optional temperature control of DHW heating temperature.
Alarm function related to flow temperature.

A217.3

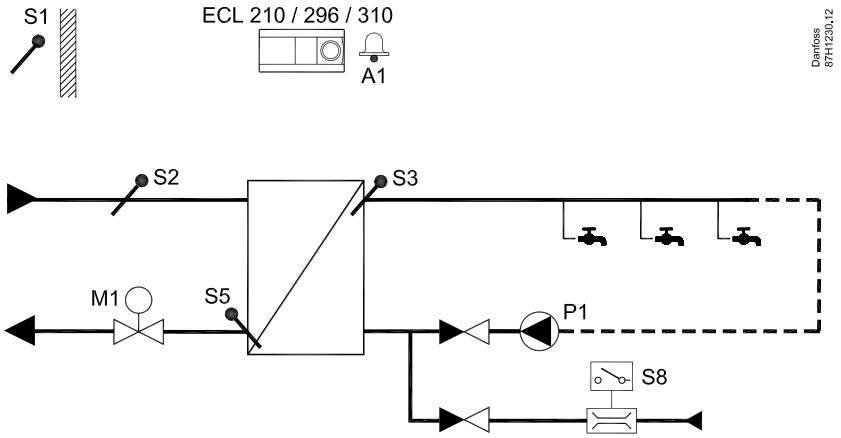

Example c

Indirectly connected DHW heating system. DHW circulation through heat exchanger.

A217.3

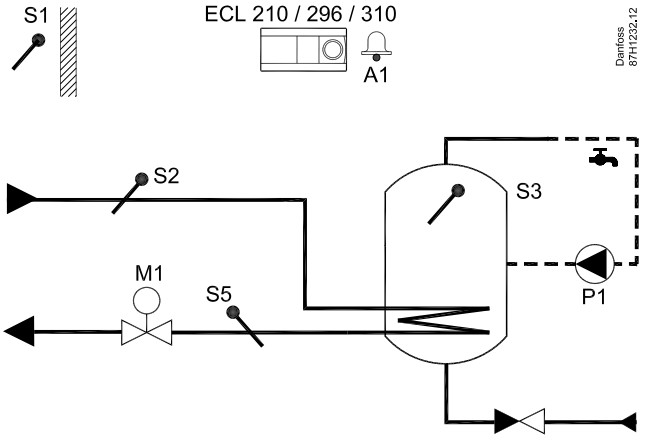

Example d

Directly heated DHW tank. DHW circulation through DHW tank.

Heating – Application A230.1
Weather compensated control of flow temperature in a heating circuit. Room temperature and wind speed compensation. Sliding return temperature limitation. Alarm function related to flow temperature.

A230.1

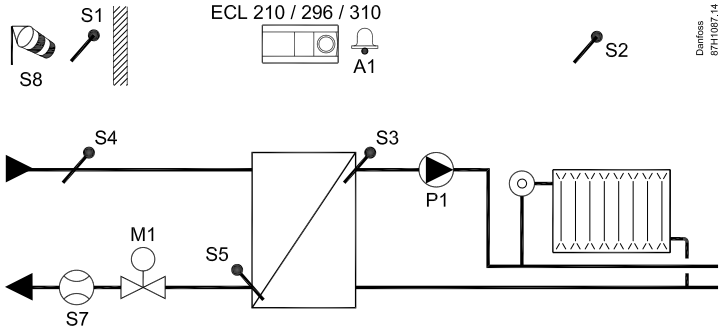

Example a

Indirectly connected heating system (typically district heating).

A230.1

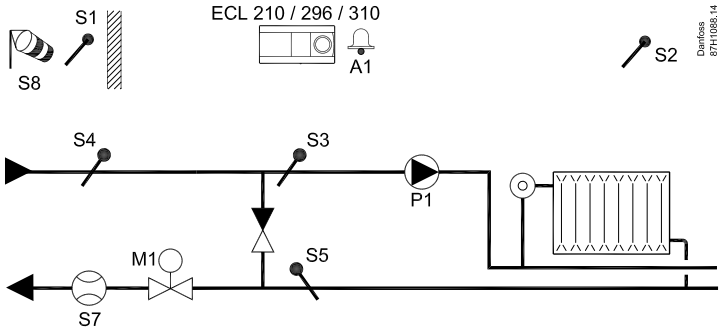

Example b

Directly connected heating system.

A230.1

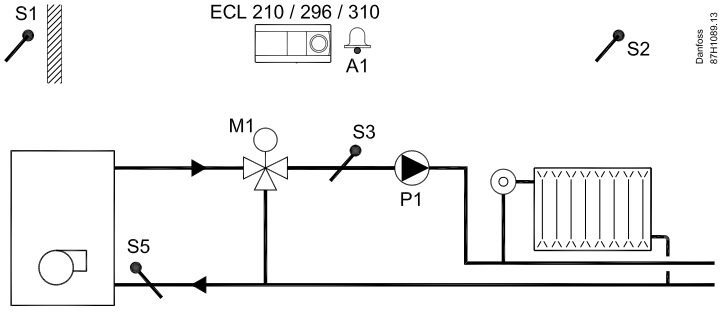

Example c

Boiler heating system with 3–port valve.

Cooling – Application A230.2
Control of flow temperature in a cooling circuit. Room and weather compensation. Return temperature limitation.

A230.1

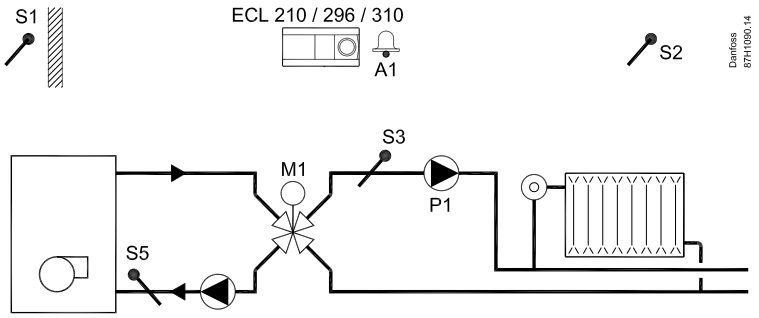

Example d

Boiler heating system with 4–port rotary valve.

A230.2

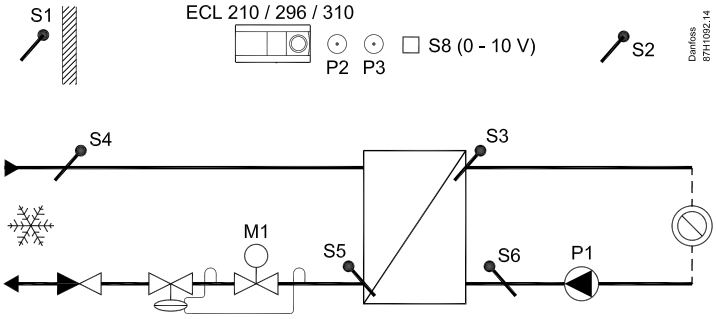

Example a

Indirectly connected cooling system (typically district cooling).

A230.2

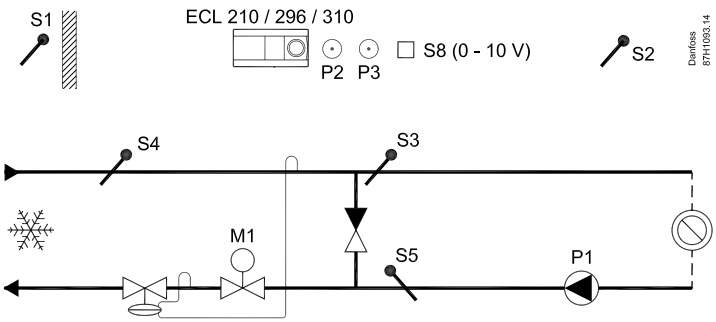

Example b

Directly connected cooling system.

A230.2

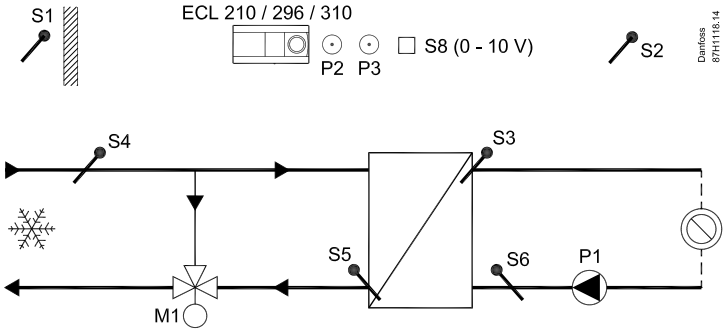

Example c

Indirectly connected cooling system, constant flow on cooling supply side.

A230.2

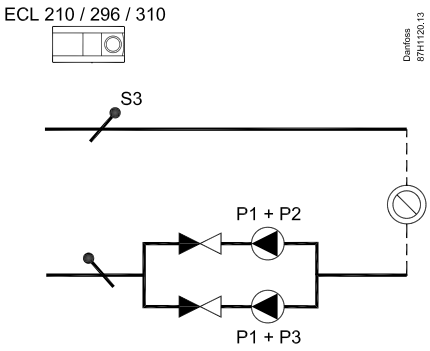

Example d

Two circulation pumps in shifted control, controlled by schedule 2.

ECL Comfort 210/296/310 Application A230

Heating – Application A230.4
Weather compensated control of flow temperature in a heating circuit. Room temperature compensation. Sliding return temperature limitation. Power / flow limitation. Alarm function related to flow temperature.
Monitoring of temperatures in self-acting controlled DHW circuit.

A230.4

Example a

Indirectly connected heating system (tipically district heating). Monitoring of pressure and DHW temperatures.

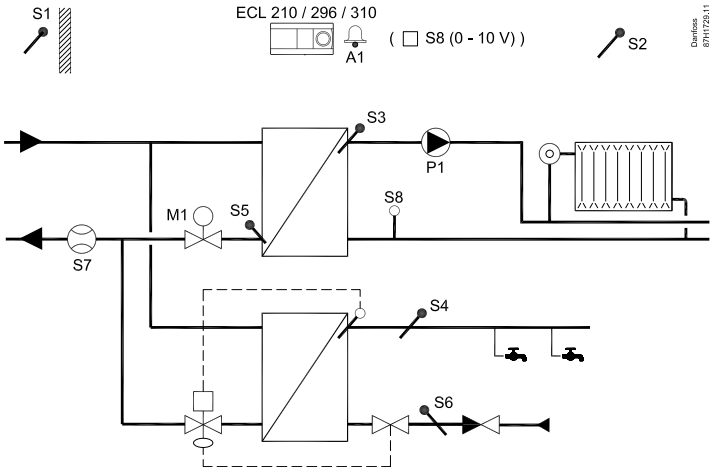

A230.4

Example b

Indirectly connected heating system (tipically district heating). Monitoring of pressure and DHW temperatures. Scheduled DHW circulation.

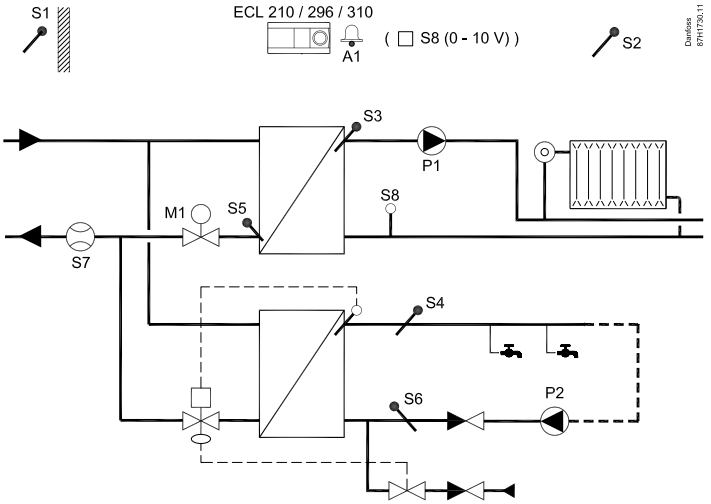

A230.4

Example c

Directly connected heating system (tipically district heating). Monitoring of pressure and DHW temperatures.

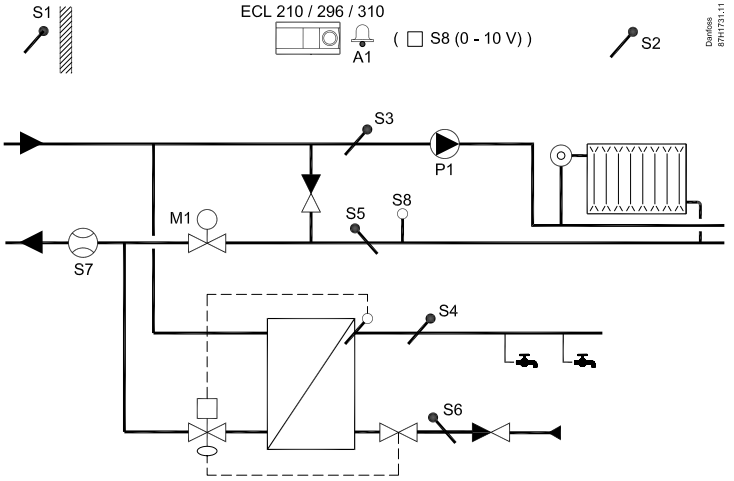

A230.4

Example d

Directly connected heating system (tipically district heating). Monitoring of pressure and DHW temperatures.

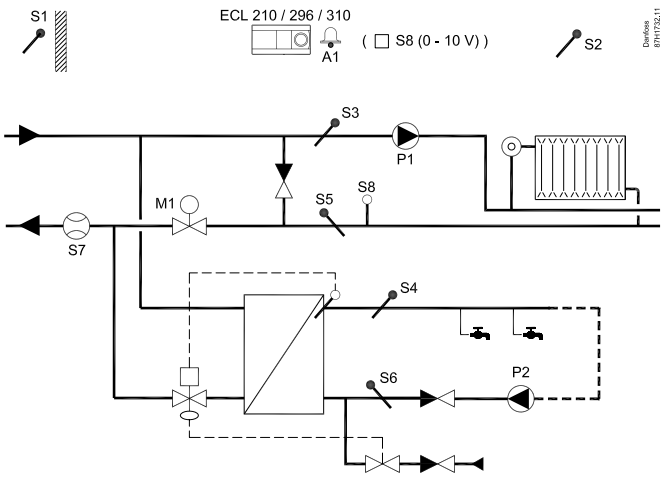

ECL Comfort 210/296/310 Application A231/A331

Weather compensated control of flow temperature in a heating circuit. Sliding return temperature limitation. Control of one or two circulation pumps. Optional control of flow temperature related to supply temperature. Refill water function.
Alarm function related to flow temperature, pressure and circulation pumps operation.
Additional function in A331: Control of one or two pumps for refill water function.

A231.1

Example a

Indirectly connected heating system with two-pump control and refill water function.

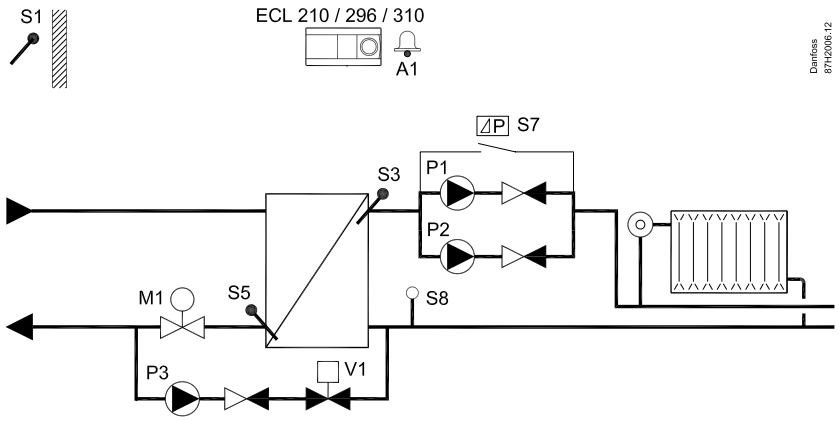

A231.2

Example a

Indirectly connected heating system with two-pump control and refill water function (supply temperature measurement gives further control / limitation possibilities).

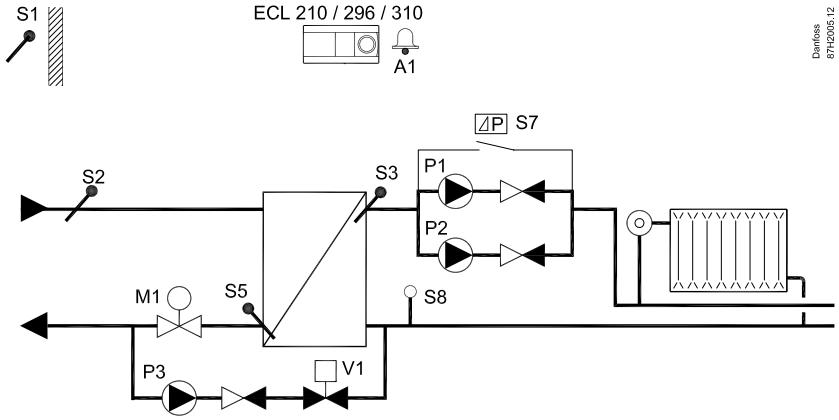

A331.1

Example a

Indirectly connected heating system with two-pump control and refill water function.

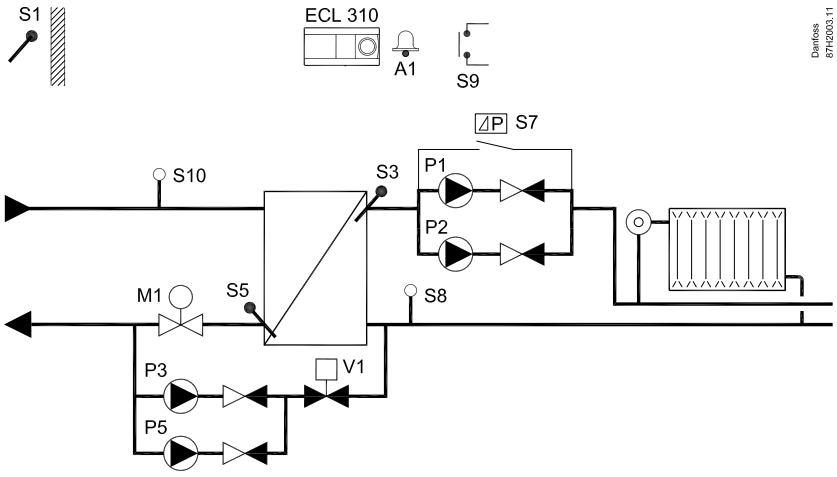

A331.2

Example a

Indirectly connected heating system with two-pump control and refill water function (supply temperature measurement gives further control / limitation possibilities).

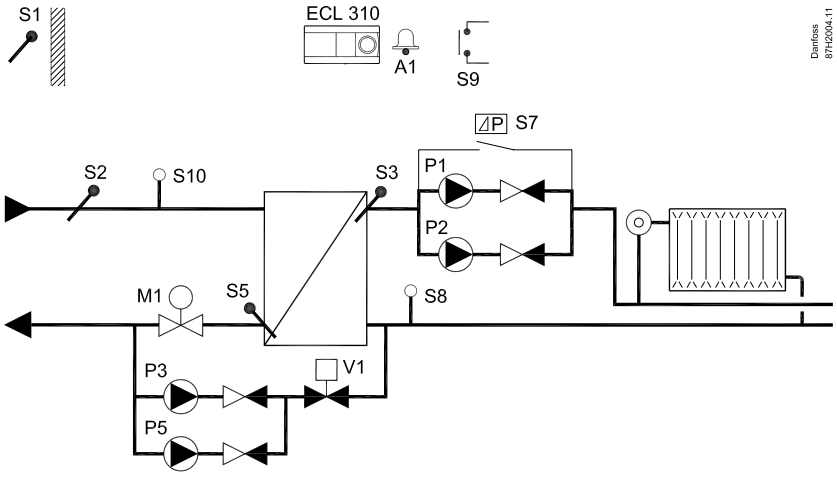

ECL Comfort 210/296/310 Application A232/A332

Weather compensated flow temperature control of heating / cooling circuit(s). Automatic change-over between heating and cooling. Circulation pump control. Dew point (cooling mode only) and surface temperature compensation. Return temperature limitation.

A232.1

Example a

Control of flow temperature (heating in floor / cooling in ceiling) in relation to outdoor, room and dew point temperature.

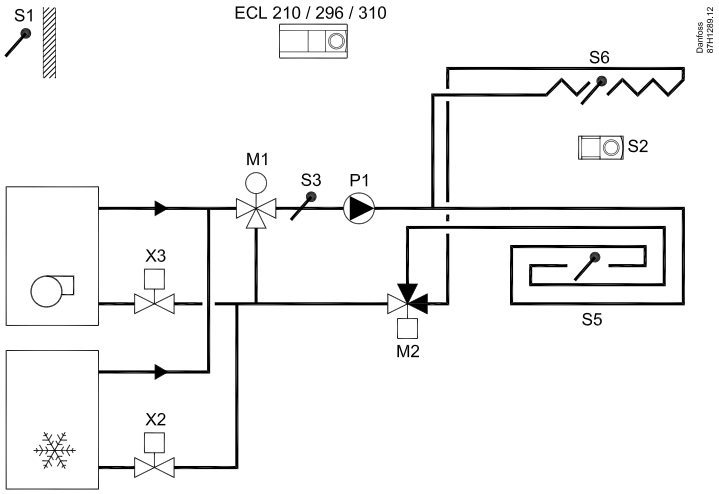

A232.1

Example b

Control of flow temperature (heating / cooling) in floor in relation to outdoor, room and dew point temperature.

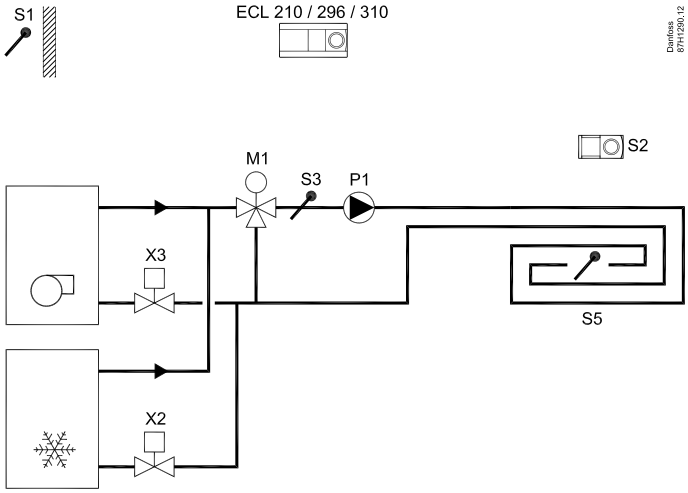

A232.1

Example c

Control of flow temperature (heating / cooling) to a fan-coil in relation to outdoor, room and dew point temperature.

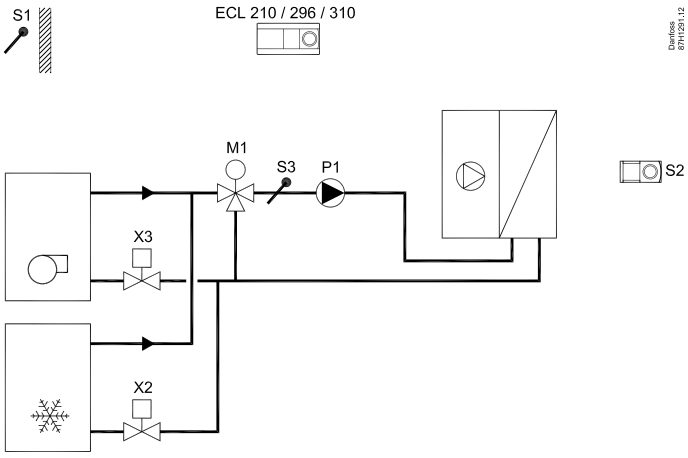

A232.1

Example d

Control of flow temperature (heating / cooling) to a fan-coil in relation to outdoor, room and dew point temperature. Heating source: District heating. Cooling source: Cooling machine.

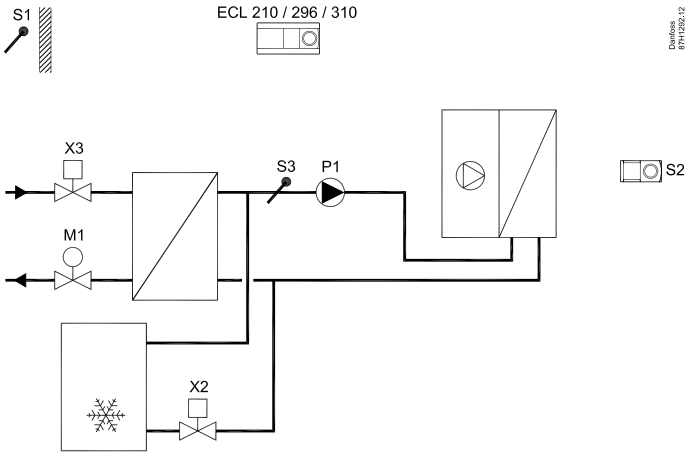

A232.1

Example e

Control of flow temperature (heating / cooling) in relation to outdoor, room and dew point temperature. Heating / cooling sources: District heating / district cooling.

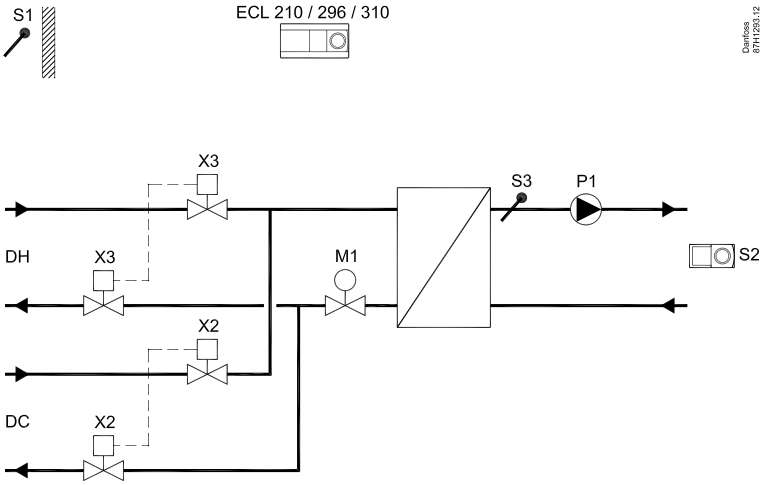

A332.1

Example a

Control of flow temperature (heating in floor / cooling in ceiling) in relation to outdoor, room and dew point temperature. Optional return temperature limitation.

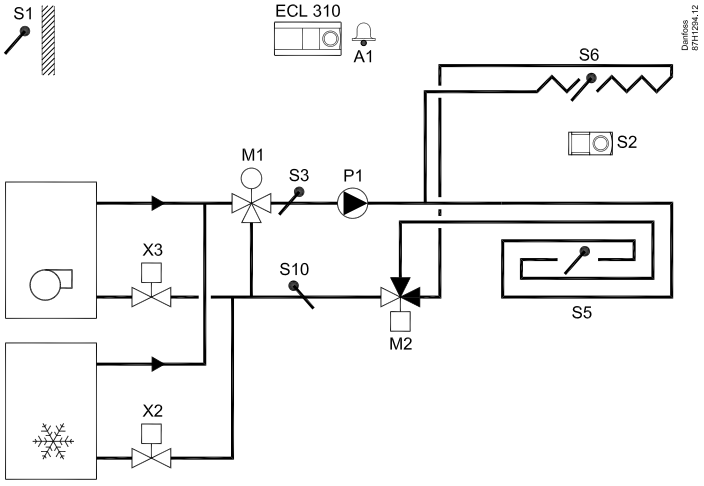

ECL Comfort 210/296/310 Application A232/A332

Weather compensated flow temperature control of heating / cooling circuit(s). Automatic change-over between heating and cooling. Circulation pump control. Dew point (cooling mode only) and surface temperature compensation. Return temperature limitation.

A332.2

Example a

Separated control of flow temperatures for heating / cooling in relation to outdoor, room and dew point temperature. Optional return temperature limitations.

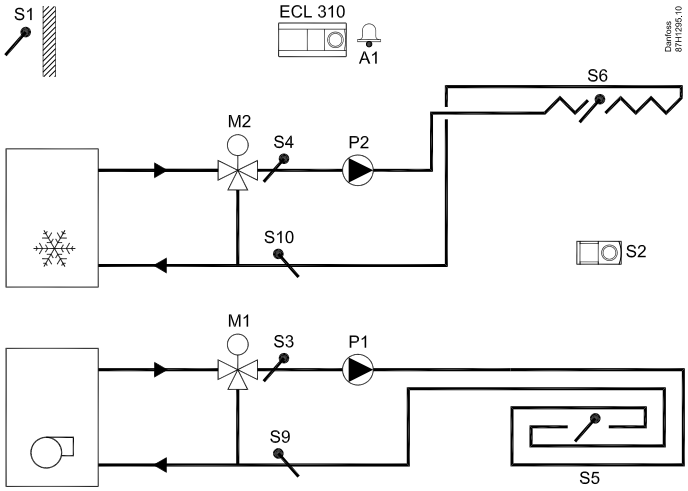

A332.2

Example b

District heating / cooling based control of flow temperatures for heating / cooling in relation to outdoor, room and dew point temperature. Optional return temperature limitations.

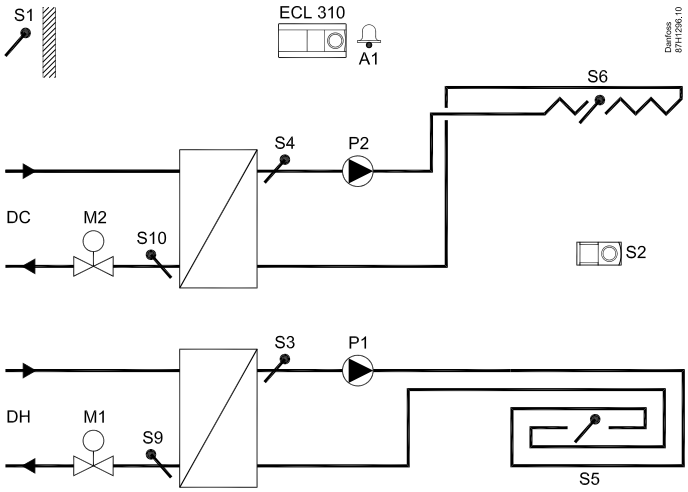

A332.2

Example c

Direct connected heating / cooling based control of flow temperatures for common heating / cooling circuit. Control in relation to outdoor and room temperature. Optional surface and return temperature limitations.

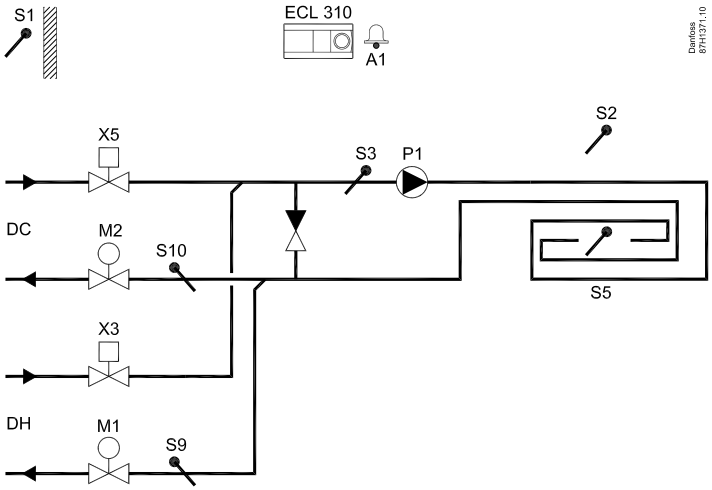

A332.2

Example d

Indirect connected heating / cooling based control of flow temperatures for common heating / cooling circuit. Control in relation to outdoor and room temperature. Optional surface and return temperature limitations.

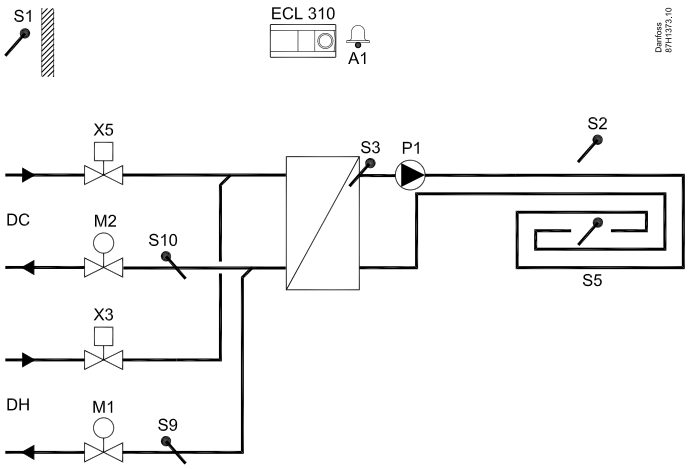

A332.3

Example a

Separated control of flow temperatures in heating and cooling circuits. Control in relation to outdoor and / or room temperature. Optional surface and return temperature limitations.

Indirectly connected DHW system with flow switch for DHW heating on demand.

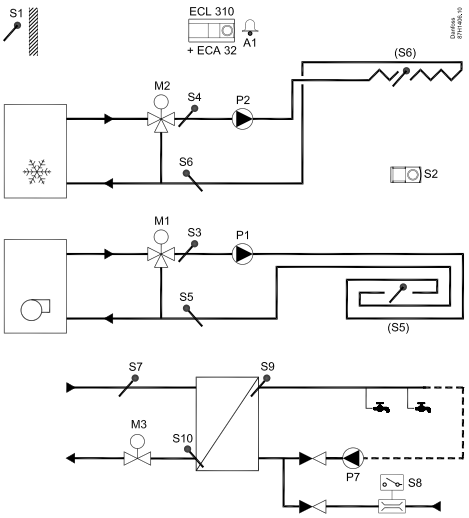

ECL Comfort 210/296/310 Application A232/A332

Weather compensated flow temperature control of heating / cooling circuit(s). Automatic change-over between heating and cooling. Circulation pump control. Dew point (cooling mode only) and surface temperature compensation. Return temperature limitation.

A332.3

Example b

Separated control of flow temperatures in heating and cooling circuits. Control in relation to outdoor and / or room temperature. Optional surface and return temperature limitations.

Indirectly connected DHW system with flow switch for DHW heating on demand.

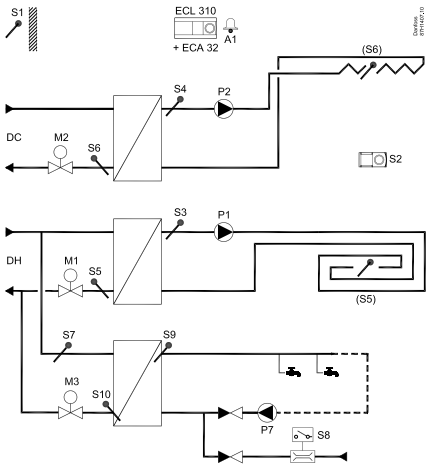

A332.4

Example a

Control of flow temperature (heating in floor / cooling in ceiling) in relation to outdoor, room and dew point temperature. Optional return and surface temperature limitation. Override functionalities for heating and cooling modes.

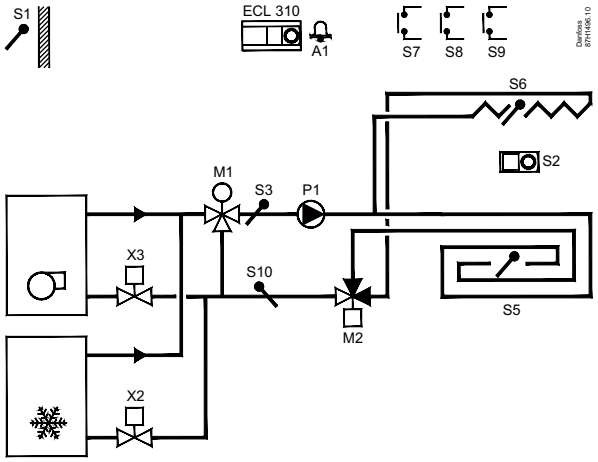

ECL Comfort 210/296/310 Application A237/A337

Weather compensated control of flow temperature in heating circuit. Room temperature compensation and sliding return temperature limitation.
Temperature control in DHW circuit with storage tank, directly heated or charging system. Return temperature limitation. Possibility for DHW priority.
Alarm function related to flow temperatures.

A237.1 / A337.1

Example a

Indirectly connected system and secondarily connected DHW tank with internal heat exchanger (optional DHW priority).

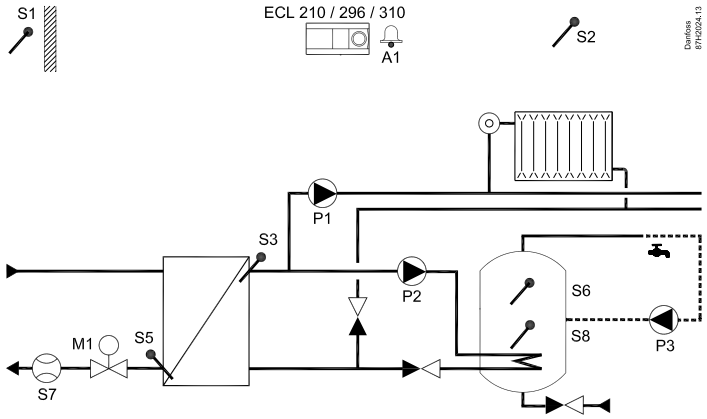

A237.1 / A337.1

Example b

Indirectly connected system and secondarily connected DHW tank with internal heat exchanger (DHW priority).

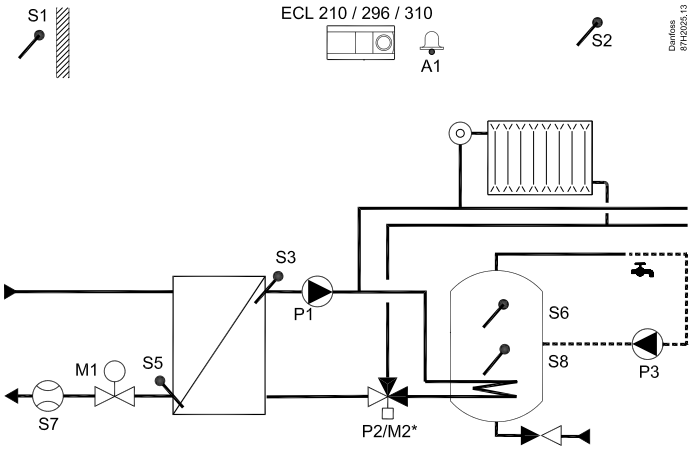

A237.1 / A337.1

Example c

Indirectly connected system and primarily connected DHW tank with internal heat exchanger (optional DHW priority).

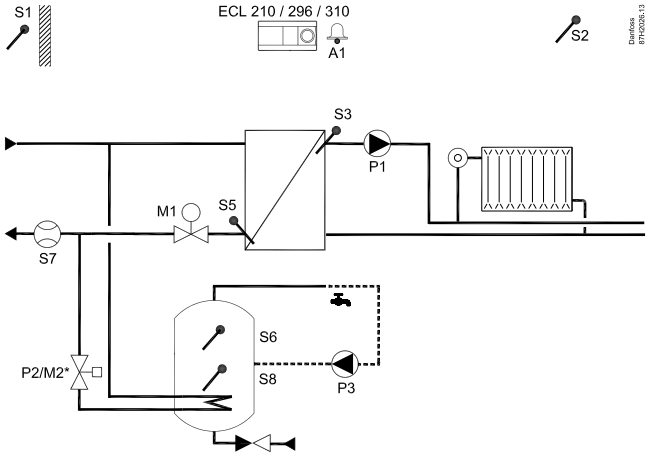

ECL Comfort 210/296/310 Application A237/A337

Weather compensated control of flow temperature in heating circuit. Room temperature compensation and sliding return temperature limitation.
Temperature control in DHW circuit with storage tank, directly heated or charging system. Return temperature limitation. Possibility for DHW priority.
Alarm function related to flow temperatures.

A237.1 / A337.1

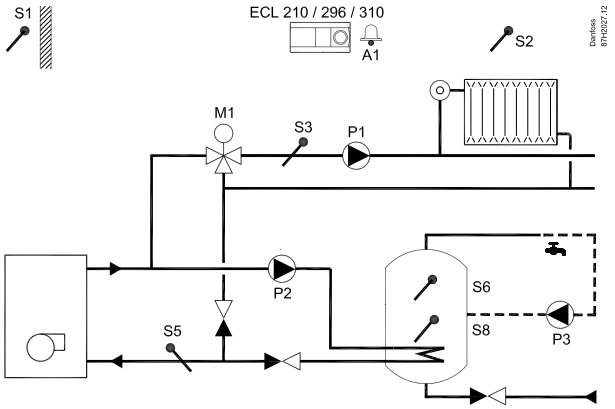

Example d

Directly connected system and DHW tank with internal heat exchanger (optional DHW priority).

A237.2 / A337.2

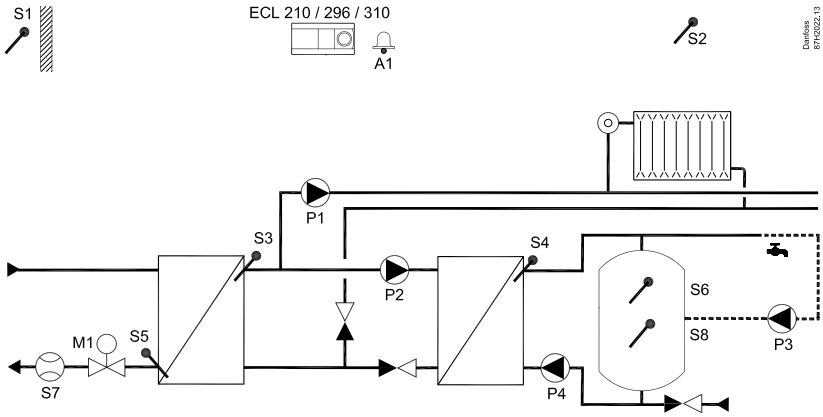

Example a

Indirectly connected system and secondarily connected DHW charging system (optional DHW priority).

A237.2 / A337.2

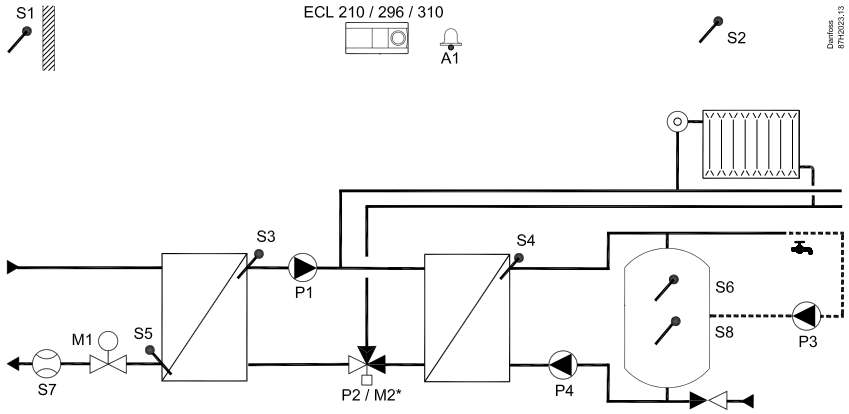

Example b

Indirectly connected system and secondarily connected DHW charging system (DHW priority).

ECL Comfort 210/296/310 Application A247/A347

Weather compensated control of flow temperature in heating circuit. Room temperature compensation and sliding return temperature limitation.
Temperature control in DHW circuit with storage tank, directly heated or charging system. Return temperature limitation. Possibility for sliding DHW priority.
Alarm function related to flow temperatures.

A247.1

Example a

Indirectly connected heating system and DHW charging system (optional DHW priority).
Room temperature can be achieved by an ECA 30.

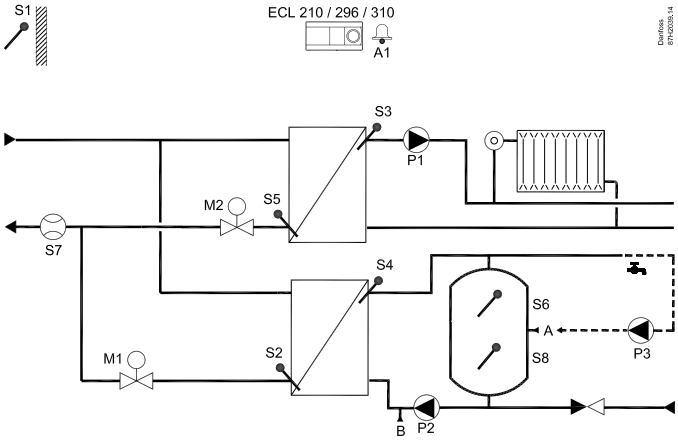

A247.1

Example b

Indirectly connected heating system and directly connected DHW tank heating system. (Pre-controlled circuit and optional DHW priority).
Room temperature can be achieved by an ECA 30.

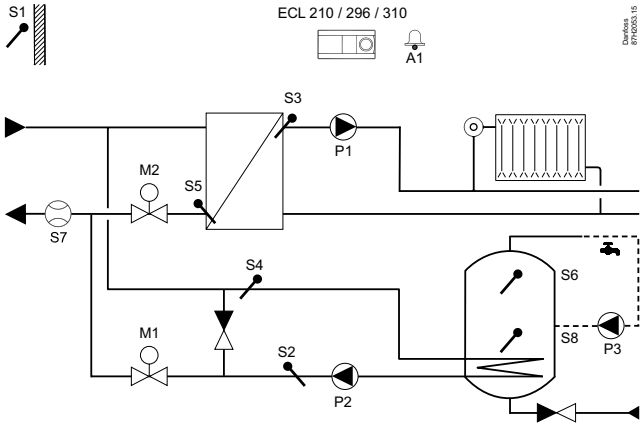

A247.1

Example c

Indirectly connected heating and DHW system (optional DHW priority).
Room temperature can be achieved by an ECA 30.

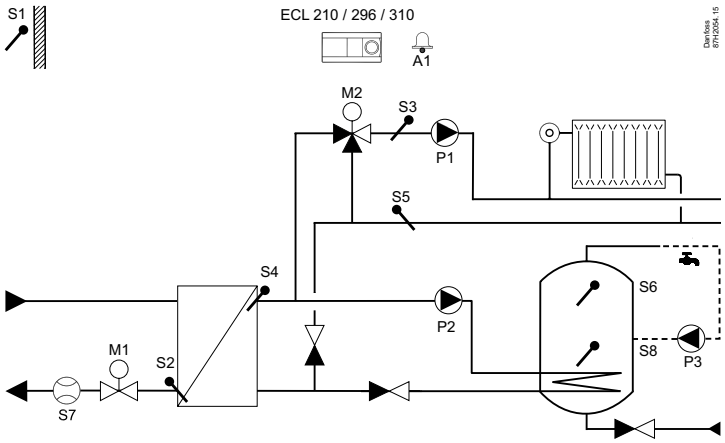

ECL Comfort 210/296/310 Application A247/A347

Weather compensated control of flow temperature in heating circuit. Room temperature compensation and sliding return temperature limitation.
Temperature control in DHW circuit with storage tank, directly heated or charging system. Return temperature limitation. Possibility for sliding DHW priority.
Alarm function related to flow temperatures.

A247.2

Example a

Indirectly connected heating system and DHW tank charging system with pre-controlled charging temperature.
Room temperature can be achieved by an ECA 30.

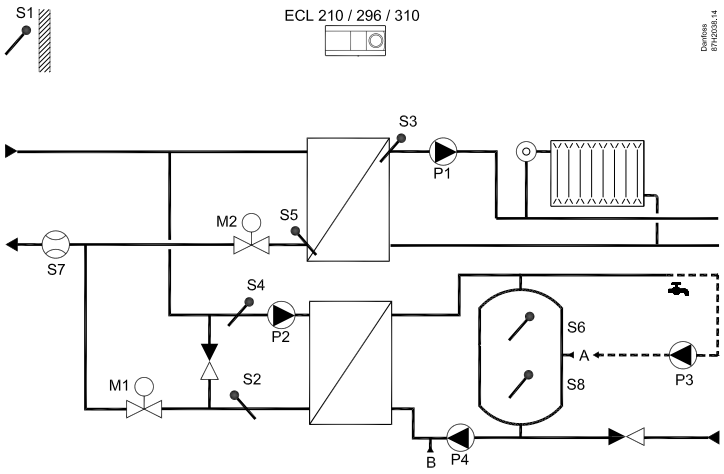

A247.2

Example b

Indirectly connected heating system and DHW system. The DHW tank charging has pre-controlled charging temperature.
Room temperature can be achieved by an ECA 30.

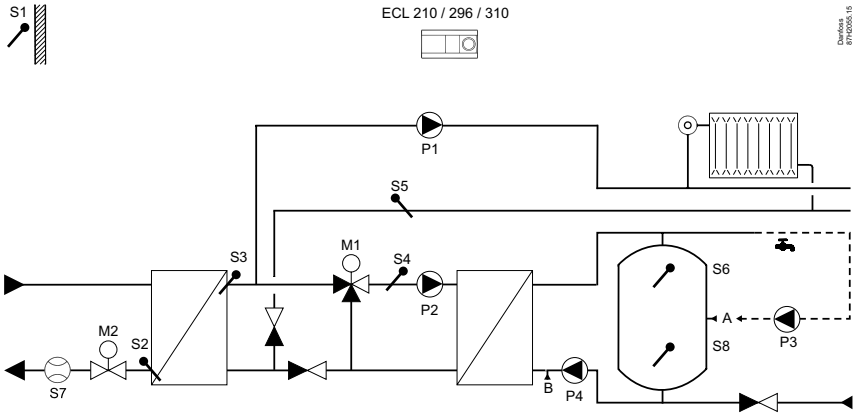

A247.2

Example c

Indirectly connected heating system and DHW system. The DHW tank charging has pre-controlled charging temperature. Optional DHW priority.
Room temperature can be achieved by an ECA 30.

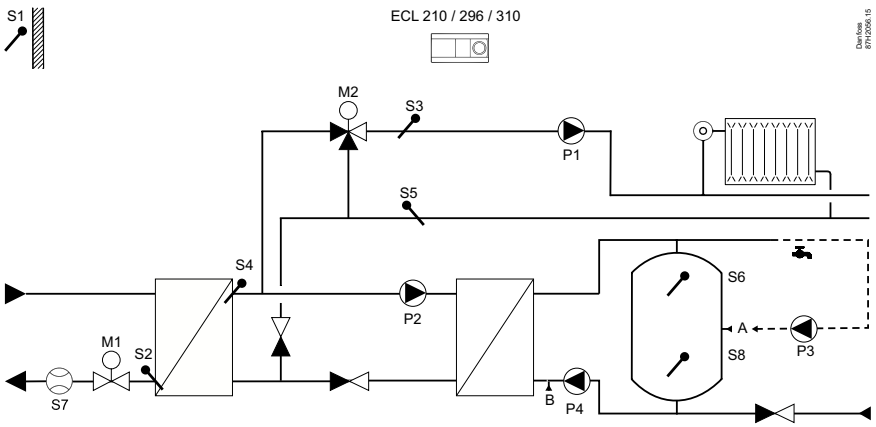

A247.3

Example a

Indirectly connected heating system and DHW charging system. The DHW tank charging system has controlled heating and charging temperature and optional DHW priority.
Room temperature can be achieved by an ECA 30.

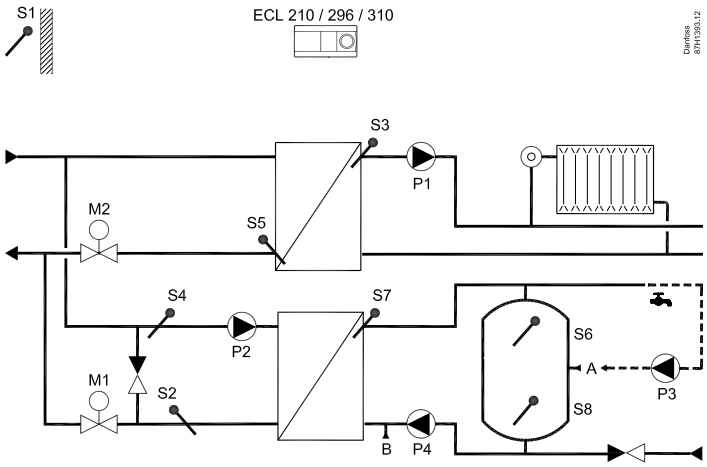

A247.3

Example b

Indirectly connected heating and DHW charging system. The DHW tank charging has controlled heating and charging temperature and optional DHW priority.
Room temperature can be achieved by an ECA 30.

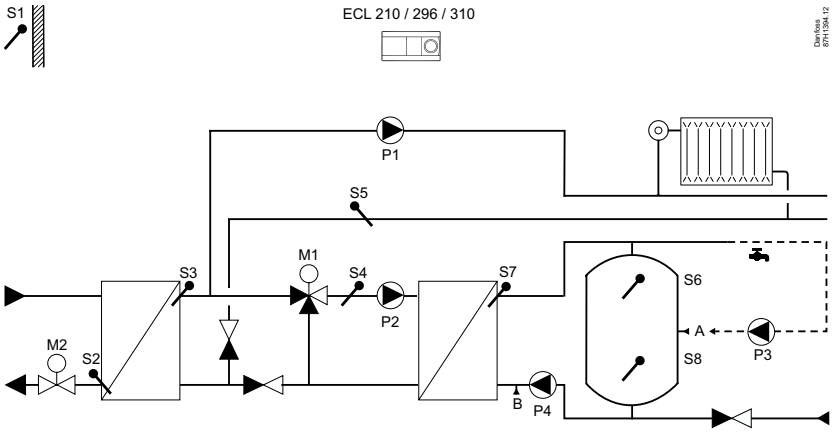

A247.3

Example c

Indirectly connected heating and DHW charging system. The DHW tank charging has optional DHW priority.
Room temperature can be achieved by an ECA 30.

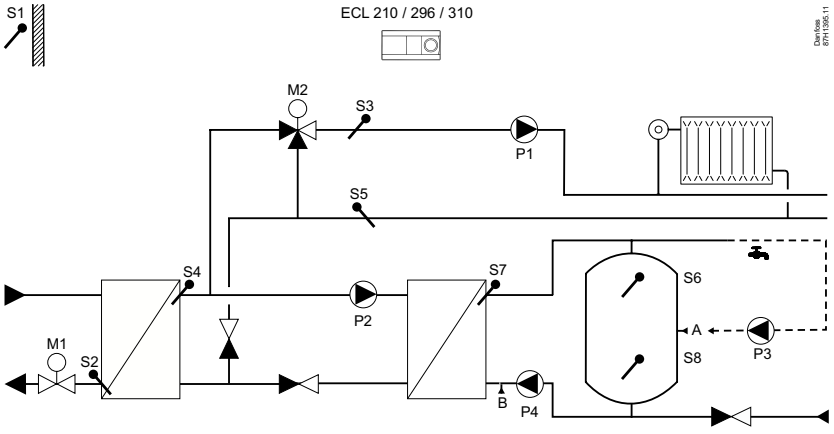

ECL Comfort 210/296/310 Application A247/A347

Weather compensated control of flow temperature in heating circuit. Room temperature compensation and sliding return temperature limitation.
Temperature control in DHW circuit with storage tank, directly heated or charging system. Return temperature limitation. Possibility for sliding DHW priority.
Alarm function related to flow temperatures.

A347.1

Example a

Indirectly connected heating system and DHW charging system (optional DHW priority).

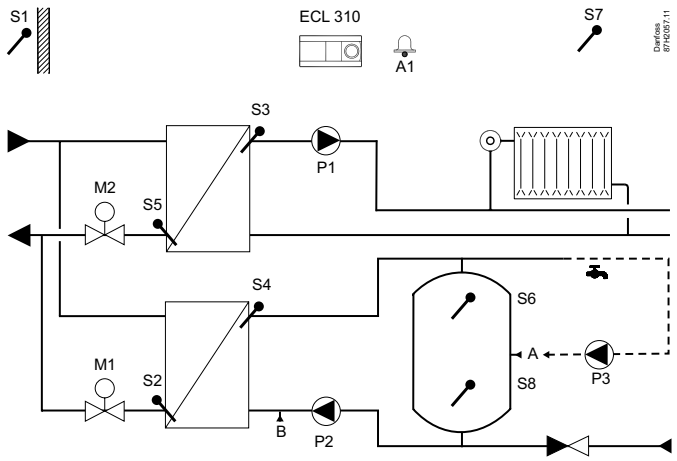

A347.1

Example b

Indirectly connected and controlled heating system. Controlled heating temperature for DHW tank and optional DHW priority.

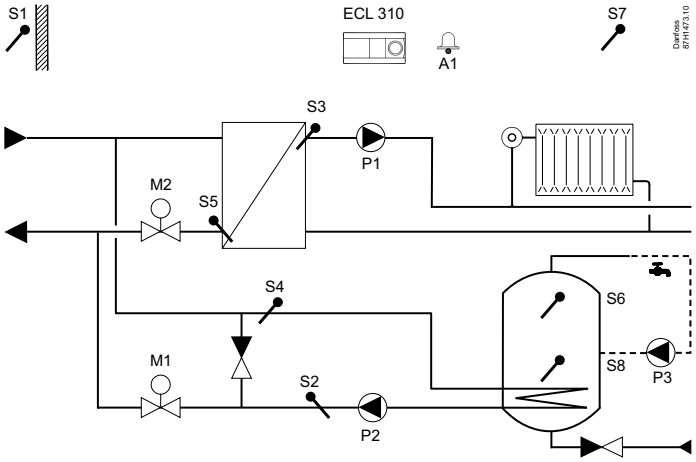

A347.1

Example c

Indirectly connected and controlled heating system. Controlled heating temperature for DHW tank and optional DHW priority.

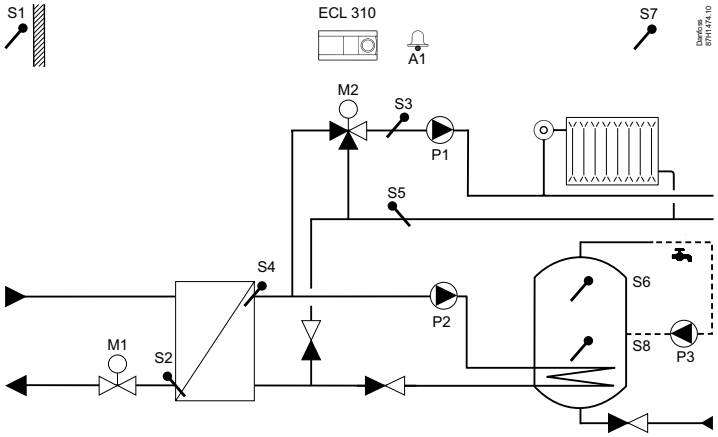

A347.2

Example a

Indirectly connected heating system and DHW system. The DHW tank charging has direct connected and pre-controlled charging temperature. Optional DHW priority.

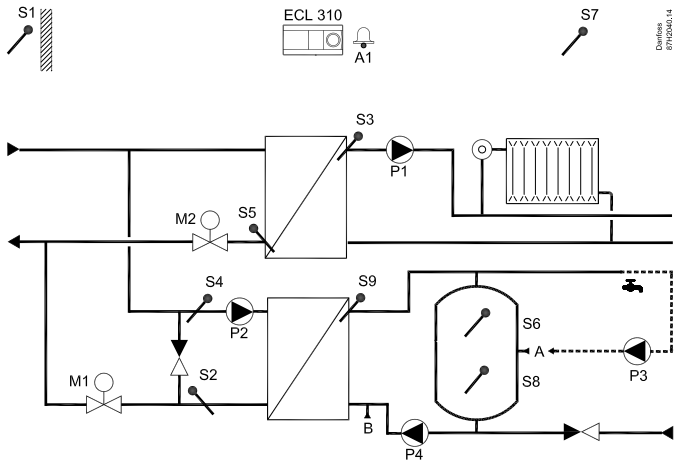

A347.2

Example b

Indirectly connected heating system and DHW system. The DHW tank charging has pre-controlled charging temperature.

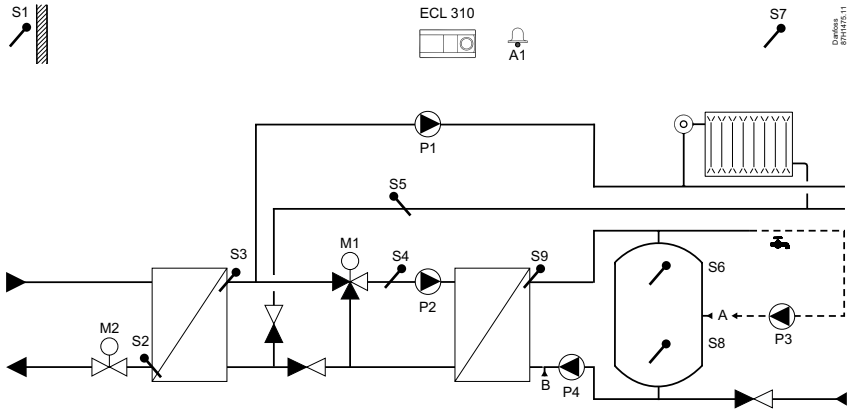

ECL Comfort 210/296/310 Application A247/A347

Weather compensated control of flow temperature in heating circuit. Room temperature compensation and sliding return temperature limitation.
Temperature control in DHW circuit with storage tank, directly heated or charging system. Return temperature limitation. Possibility for sliding DHW priority.
Alarm function related to flow temperatures.

A347.2

Example c

Indirectly connected heating system and DHW system. The DHW tank charging has pre-controlled charging temperature. Optional DHW priority.

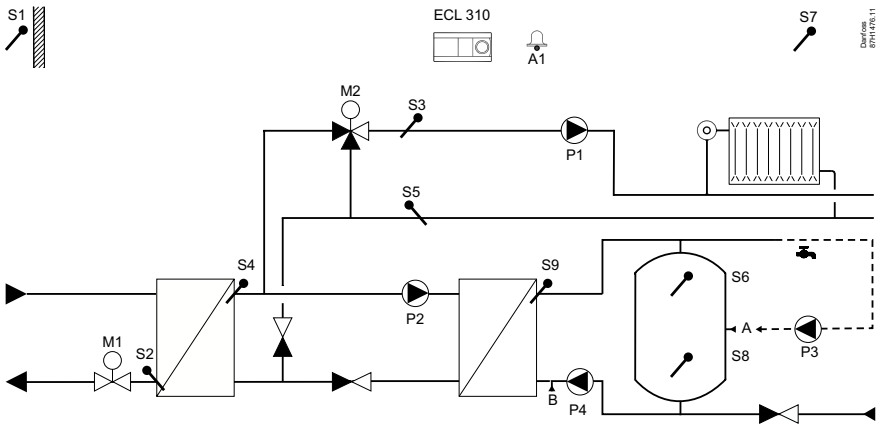

A347.3

Example a

Indirectly connected heating system and DHW charging system (optional DHW priority).
S8 monitors DHW circulation return.

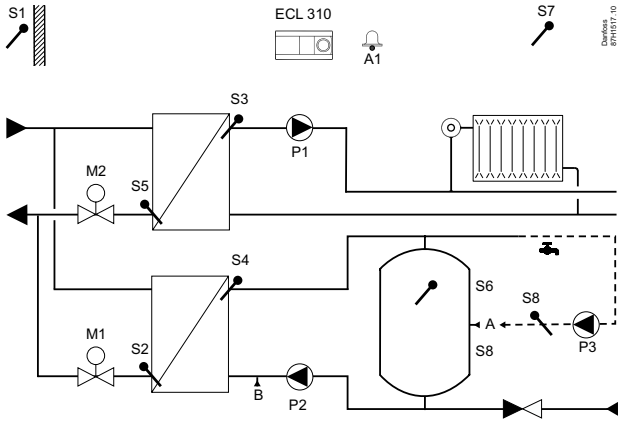

ECL Comfort 210/296/310 Application A260

Weather compensated control of flow temperature in two heating circuits.
Room temperature compensation and sliding return temperature limitation.
Circuits independent in parallel or circuit 2 after circuit 1.
Alarm function related to flow temperatures.

A260.1

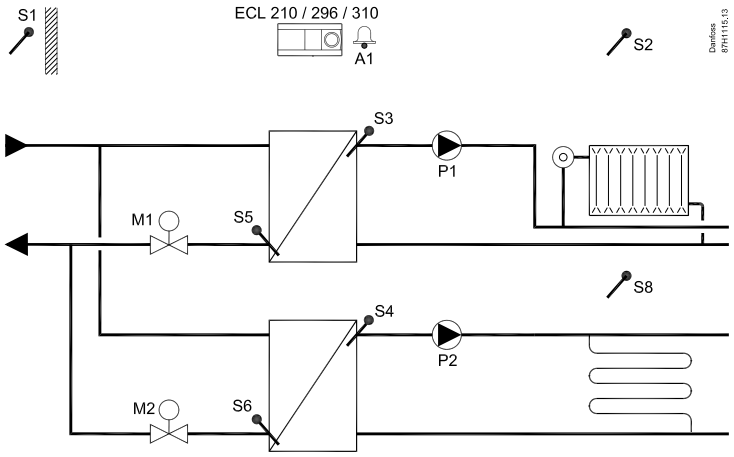

Example a

Indirectly connected heating systems (typically district heating). Circuit 2 is floor heating.

A260.1

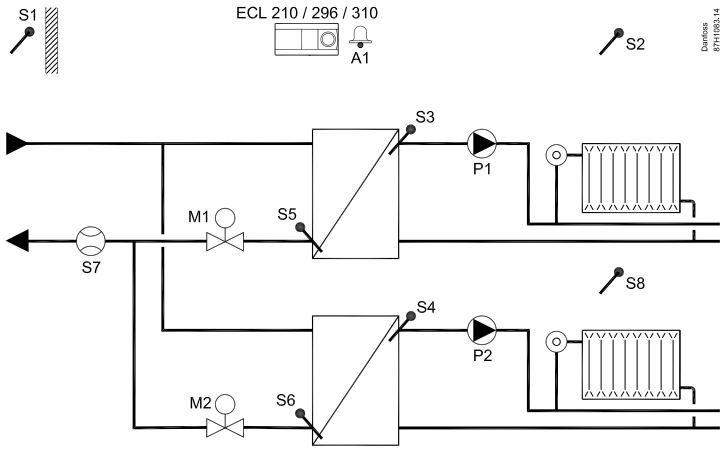

Example b

Indirectly connected heating systems (typically district heating).
S7 is pulse based flow or energy meter.

A260.1

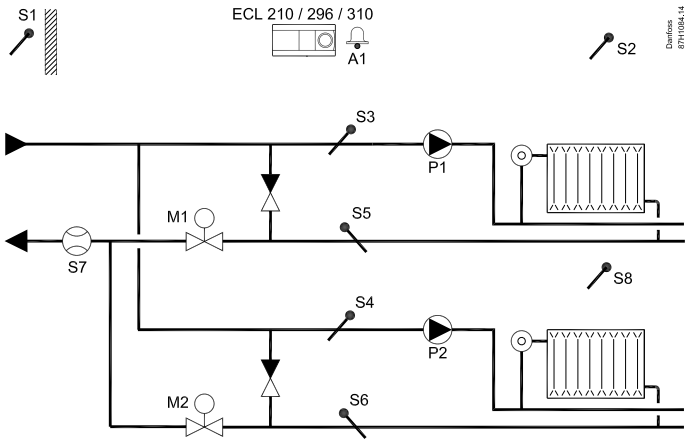

Example c

Indirectly connected heating systems (typically district heating).
S7 is pulse based flow or energy meter.

ECL Comfort 210/296/310 Application A260

Weather compensated control of flow temperature in two heating circuits.
Room temperature compensation and sliding return temperature limitation.
Circuits independent in parallel or circuit 2 after circuit 1.
Alarm function related to flow temperatures.

A260.1

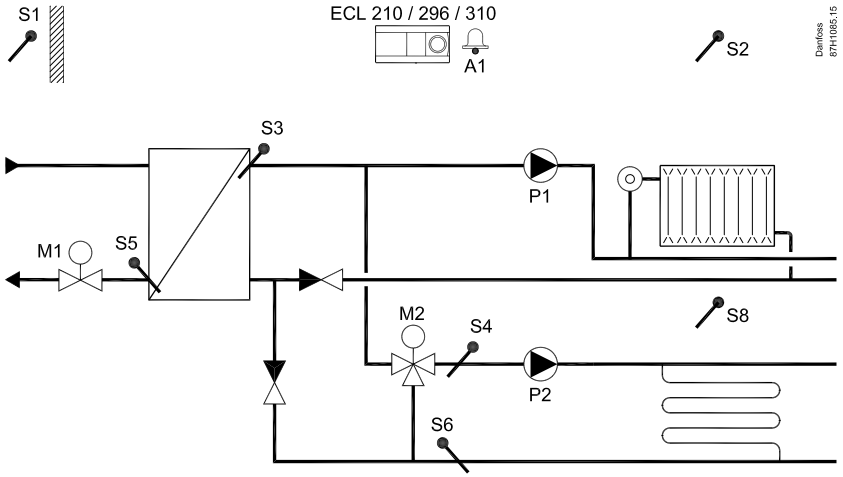

Example d

Indirectly connected heating systems (typically district heating). Circuit 2 (as sub-circuit) is floor heating.

A260.1

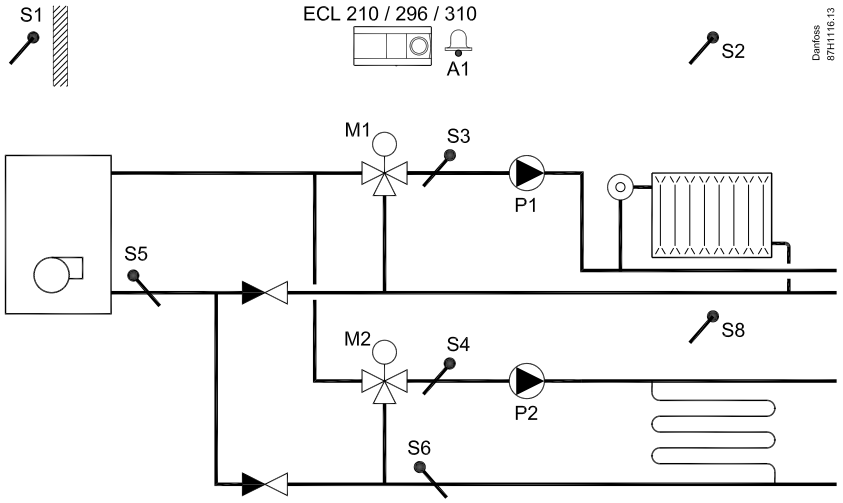

Example e

Directly connected heating systems (boiler-based). Circuit 2 is floor heating.

A260.1

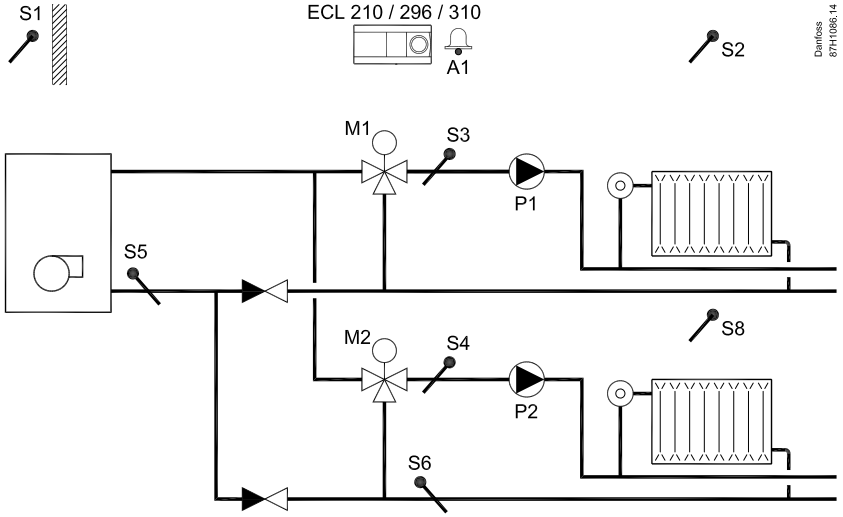

Example f

Directly connected heating systems (boiler-based).

ECL Comfort 210/296/310 Application A266

Weather compensated control of flow temperature in heating circuit. Room temperature compensation and sliding return temperature limitation.
Flow temperature control in DHW circuit. Return temperature limitation. Sliding DHW priority possibility. Optional DHW temperature control related to DHW flow detection.
Alarm function related to flow temperatures.

A266.1

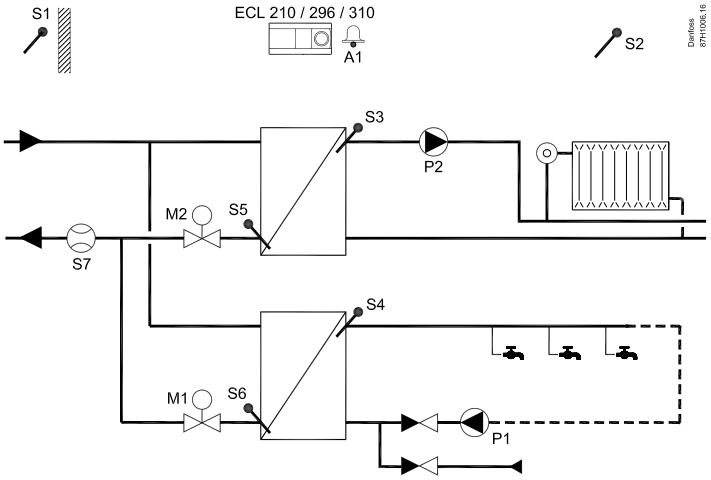

Example a

Indirectly connected heating and DHW system (typically district heating).
S7 is pulse based flow or energy meter.

A266.1

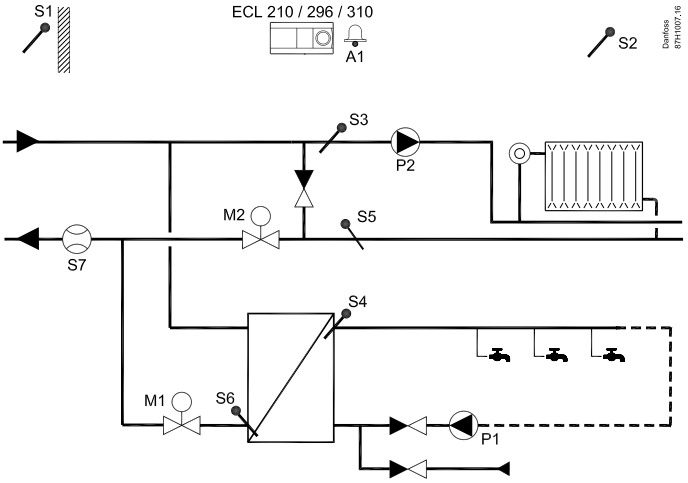

Example b

Directly connected heating and indirectly connected DHW system.
S7 is pulse based flow or energy meter.

A266.1

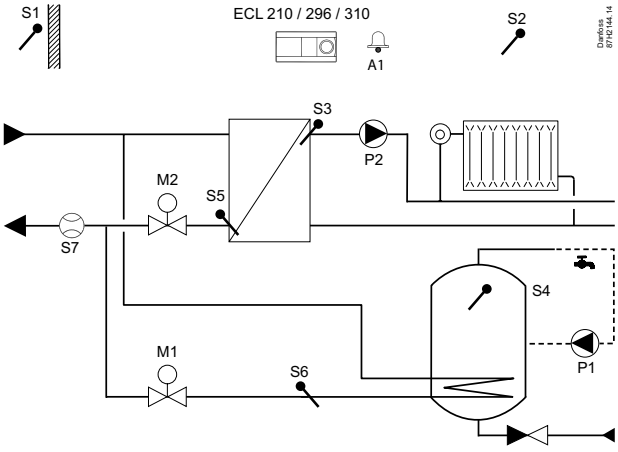

Example c

Indirectly connected heating system and directly connected DHW tank heating.
S7 is pulse based flow or energy meter.

ECL Comfort 210/296/310 Application A266

Weather compensated control of flow temperature in heating circuit. Room temperature compensation and sliding return temperature limitation.
Flow temperature control in DHW circuit. Return temperature limitation. Sliding DHW priority possibility. Optional DHW temperature control related to DHW flow detection.
Alarm function related to flow temperatures.

A266.2

Example a

Indirectly connected heating and DHW system with flow switch.
S7 is pulse based flow or energy meter

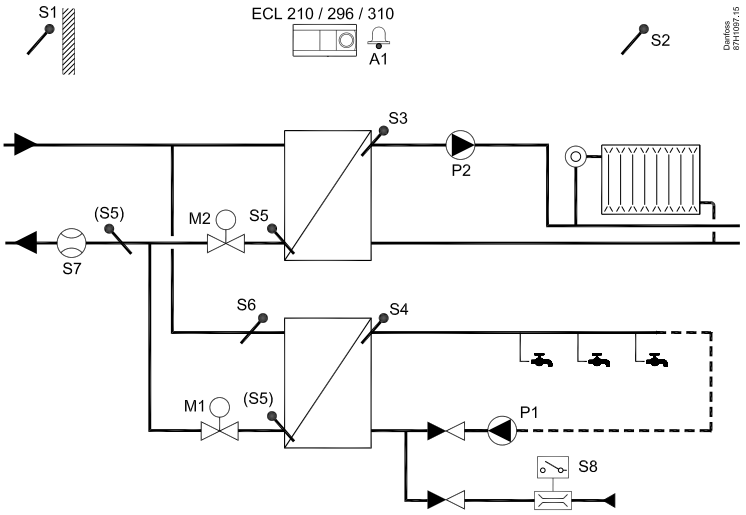

A266.9

Example a

Indirectly connected heating and DHW system with pressure transmitter and universal alarm switch.

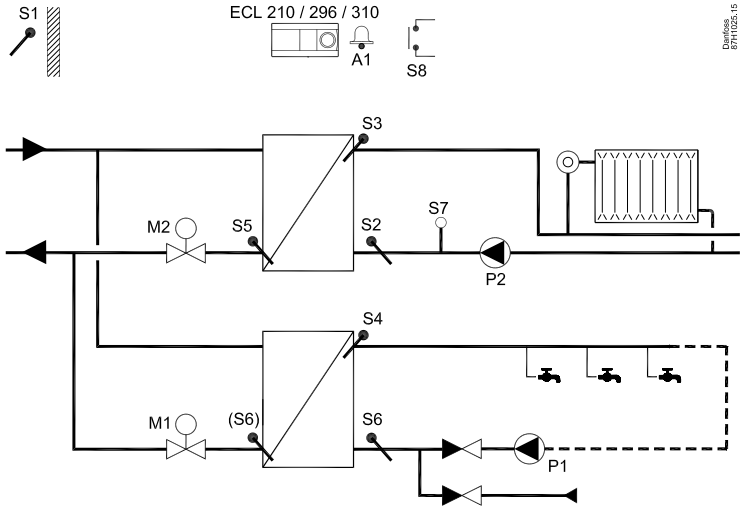

A266.10

Example a

Indirectly connected heating and DHW system.
Secondary side return temperatures monitoring and universal alarm switch.
S7 is pulse based flow or energy meter.
Flow / energy limitation is optional.

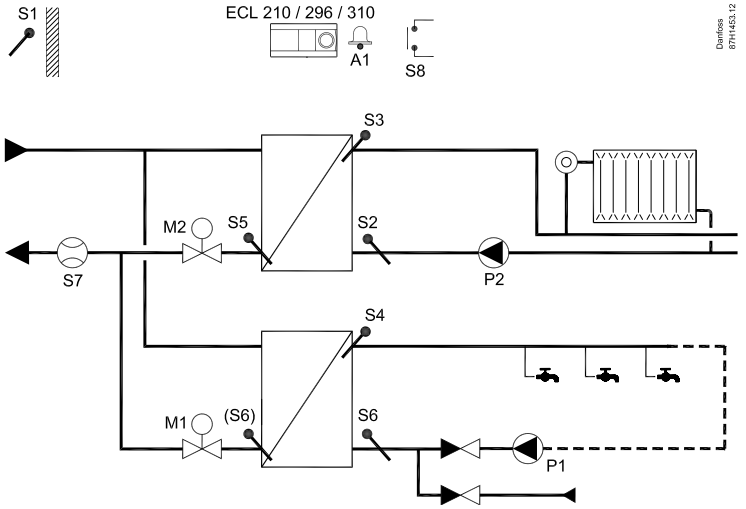

ECL Comfort 210/296/310 Application A275/A375

Weather compensated flow temperature control of 1-stage boiler based heating systems. One direct heating circuit and one mixing circuit. Circulation pumps control, room temperature control and sliding return temperature limitation.
Temperature control of DHW storage tank with internal heat exchanger. Frost protection and alarm function.
The A275 application key contains applications related to ECL Comfort 310 for increased functionalities (multiple boiler stages).

A275.1

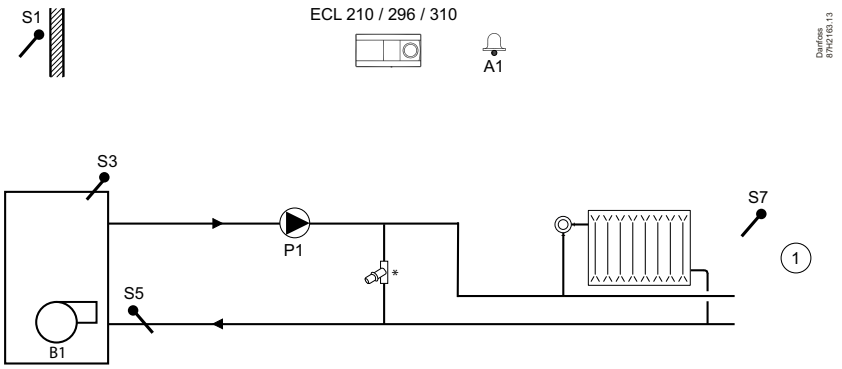

Example a

Boiler ON / OFF control for a heating circuit.
* = Automatic by-pass valve.

A275.1

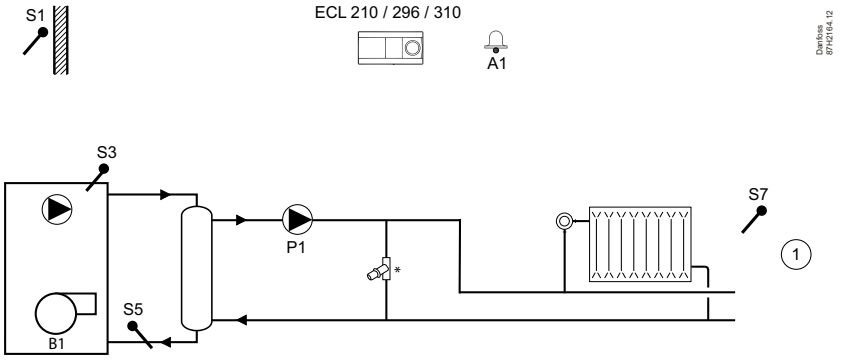

Example b

Boiler ON/OFF control for a heating circuit. The boiler circuit is equipped with a low loss header.
* = Automatic by-pass valve.

A275.2

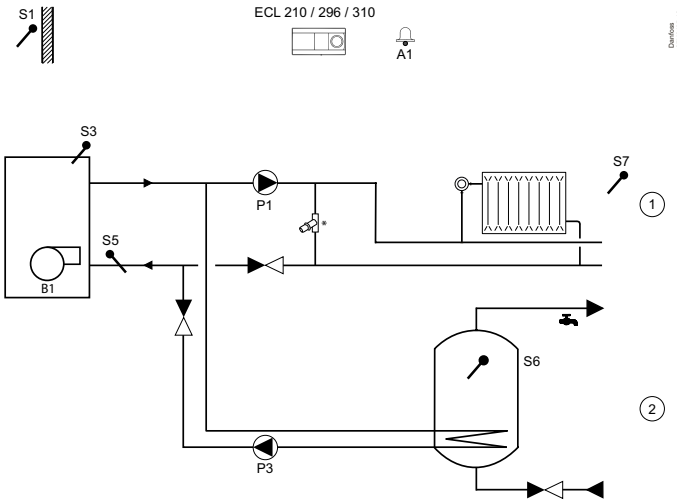

Example a

Boiler ON / OFF control for a heating and a DHW circuit. Optional DHW priority.
* = Automatic by-pass valve.

ECL Comfort 210/296/310 Application A275/A375

Weather compensated flow temperature control of 1-stage boiler based heating systems. One direct heating circuit and one mixing circuit. Circulation pumps control, room temperature control and sliding return temperature limitation.
Temperature control of DHW storage tank with internal heat exchanger. Frost protection and alarm function.
The A275 application key contains applications related to ECL Comfort 310 for increased functionalities (multiple boiler stages).

A275.2

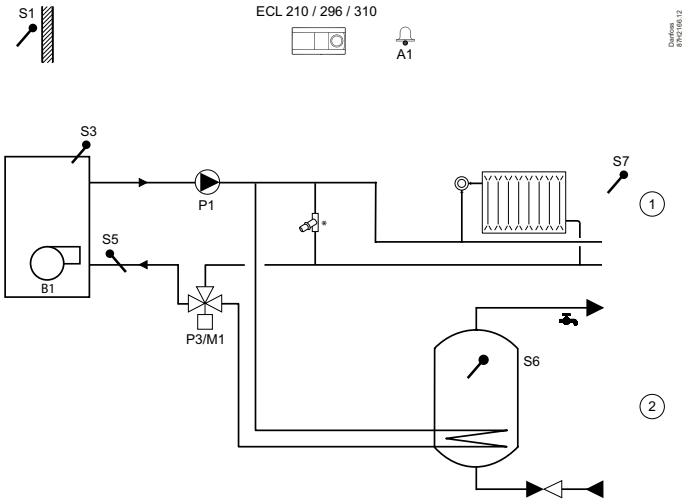

Example b

Boiler ON / OFF control for a heating and a DHW circuit. DHW priority.
* = Automatic by-pass valve.

A275.2

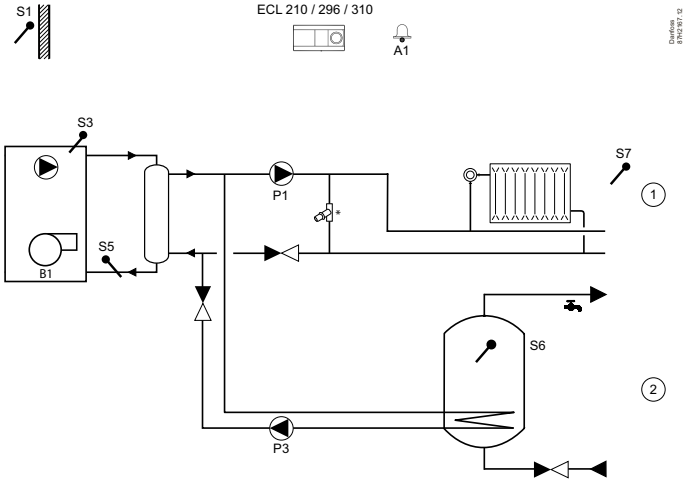

Example c

Boiler ON / OFF control for a heating and a DHW circuit. Optional DHW priority. The boiler circuit is equipped with a low loss header.
* = Automatic by-pass valve.

A275.2

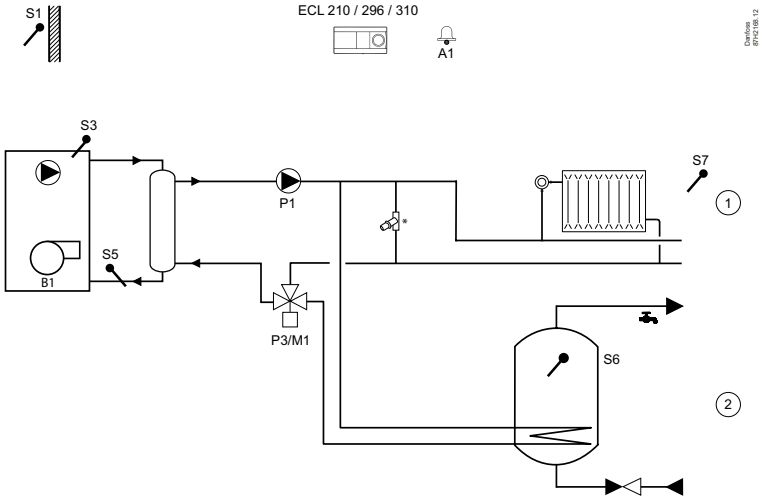

Example d

Boiler ON / OFF control for a heating and a DHW circuit. DHW priority. The boiler circuit is equipped with a low loss header.
* = Automatic by-pass valve.

A275.3

Example a

I Boiler ON / OFF control for a direct heating circuit (1), a mixing circuit (2) and a DHW circuit (3). Optional DHW priority.

* = Automatic by-pass valve.

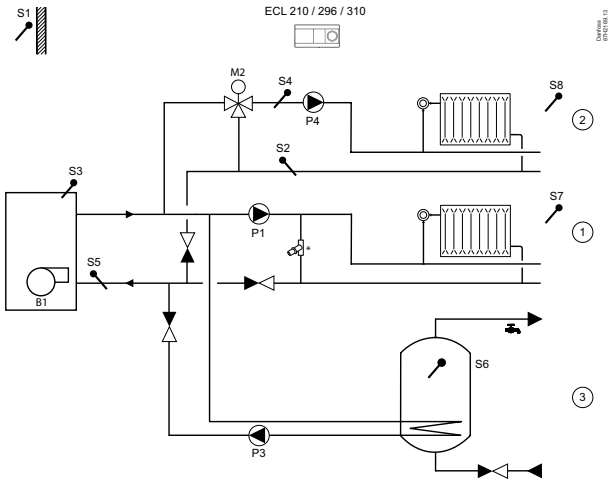

A275.3

Example b

Boiler ON / OFF control for a direct heating circuit (1), a mixing circuit (2) and a DHW circuit (3). Partly DHW priority.

* = Automatic by-pass valve.

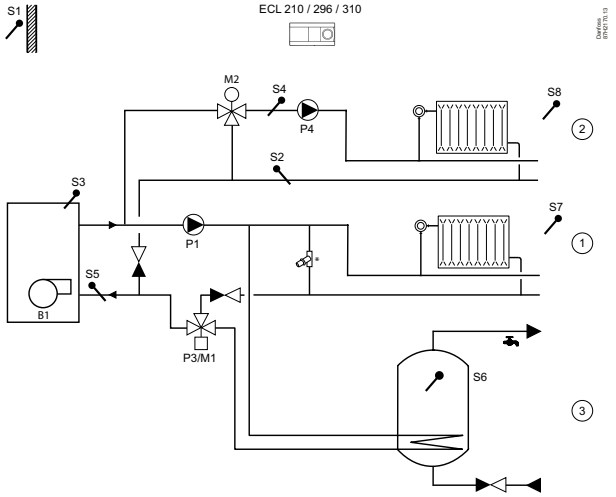

A275.3

Example c

Boiler ON / OFF control for a direct heating circuit (1), a mixing circuit (2) and a DHW circuit (3). DHW priority.

* = Automatic by-pass valve.

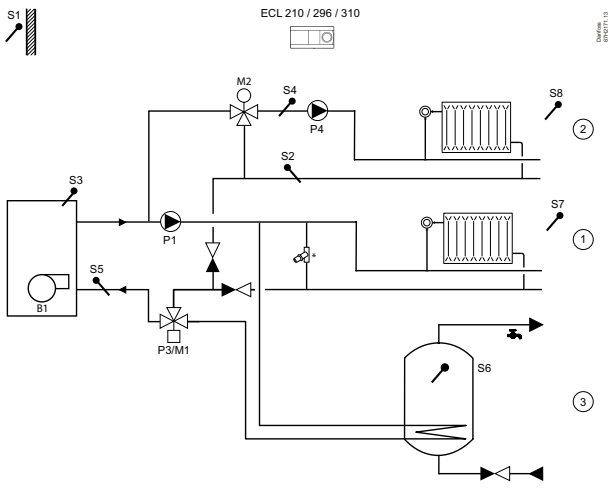

ECL Comfort 210/296/310 Application A275/A375

Weather compensated flow temperature control of 1-stage boiler based heating systems. One direct heating circuit and one mixing circuit. Circulation pumps control, room temperature control and sliding return temperature limitation.
Temperature control of DHW storage tank with internal heat exchanger. Frost protection and alarm function.
The A275 application key contains applications related to ECL Comfort 310 for increased functionalities (multiple boiler stages).

A275.3

Example d

Boiler ON / OFF control for a direct heating circuit (1), a mixing circuit (2) and a DHW circuit (3). Optional DHW priority. The mixing circuit (2) is controlled by means of a 4-port mixing valve.
* = Automatic by-pass valve.

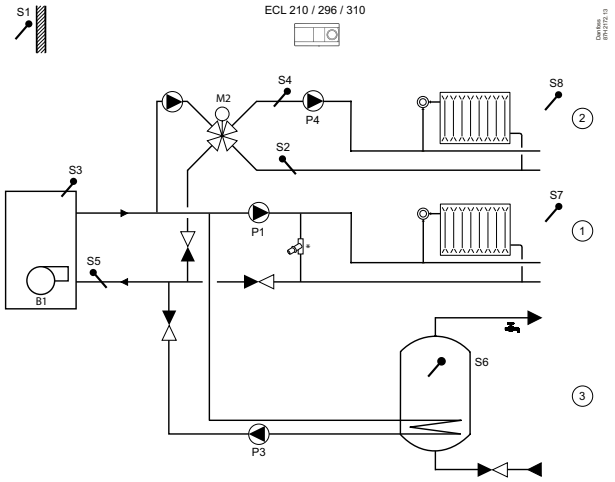

A275.3

Example e

Boiler ON / OFF control for a direct heating circuit (1), a mixing circuit (2) and a DHW circuit (3). Optional DHW priority. The boiler circuit is equipped with a low loss header.
* = Automatic by-pass valve.

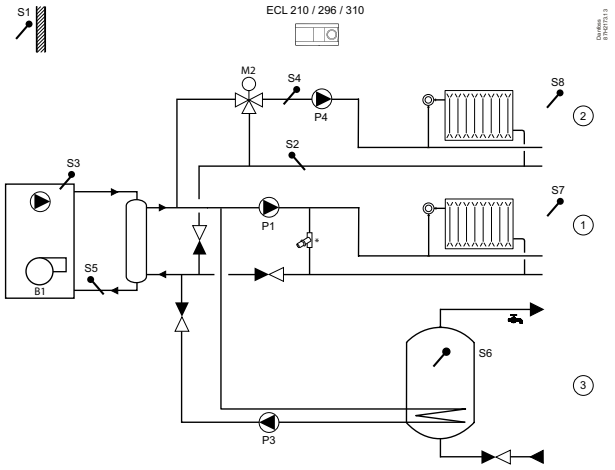

A275.3

Example f

Boiler ON / OFF control, a mixing circuit control and a DHW circuit control. Optional DHW priority.
* = Automatic by-pass valve.

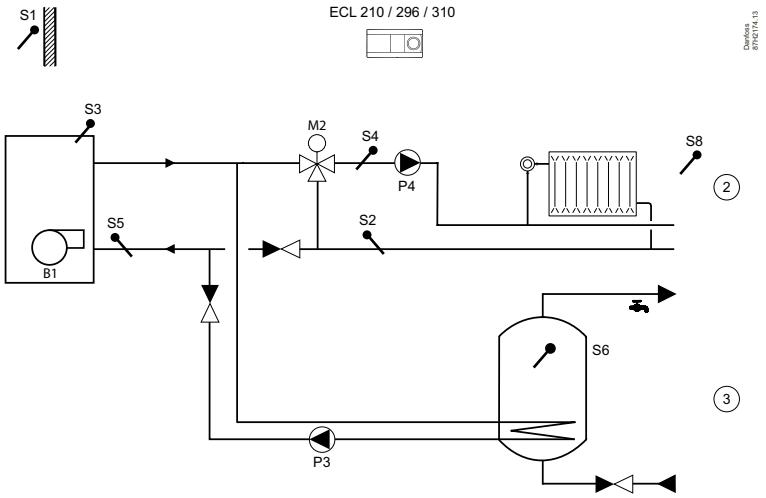

< back to index

A275.3

Example g

Boiler ON / OFF control for a direct heating circuit (1) and a mixing circuit (2).

* = Automatic by-pass valve.

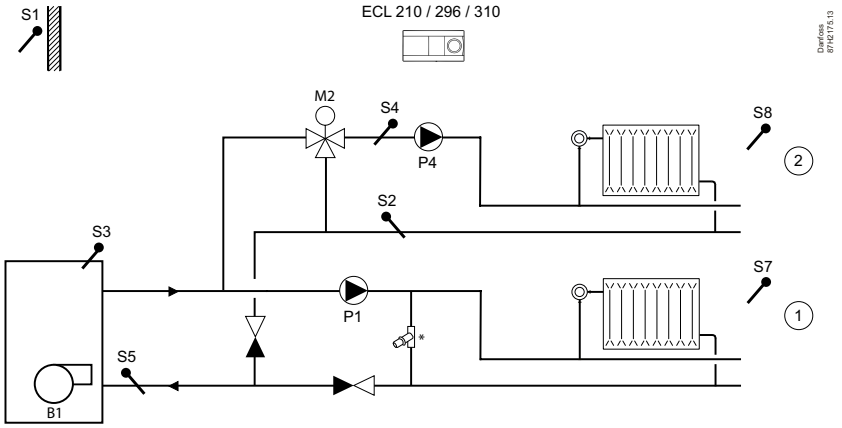

A375.1

Example a

One boiler with 2 x burner ON / OFF control for a heating circuit.

* = Automatic by-pass valve.

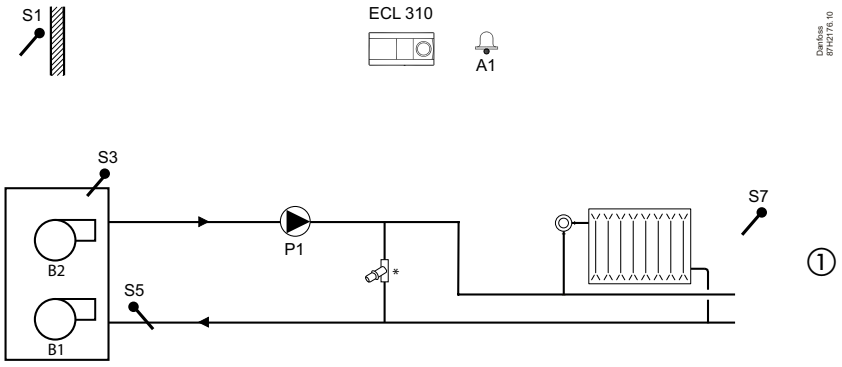

A375.1

Example b

2 x boiler ON / OFF control for a heating circuit.

* = Automatic by-pass valve.

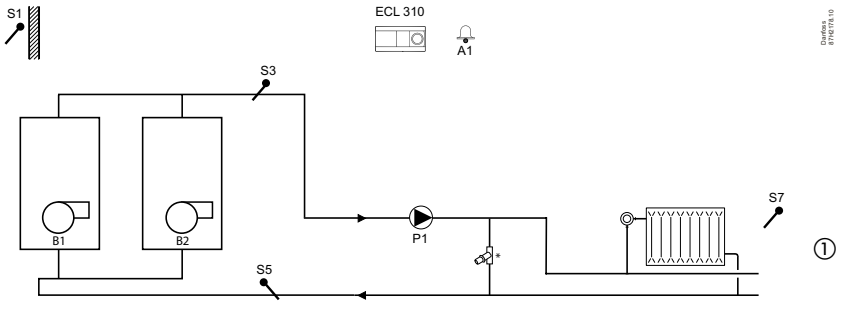

ECL Comfort 210/296/310 Application A275/A375

Weather compensated flow temperature control of 1-stage boiler based heating systems. One direct heating circuit and one mixing circuit. Circulation pumps control, room temperature control and sliding return temperature limitation.
Temperature control of DHW storage tank with internal heat exchanger. Frost protection and alarm function.
The A275 application key contains applications related to ECL Comfort 310 for increased functionalities (multiple boiler stages).

A375.1

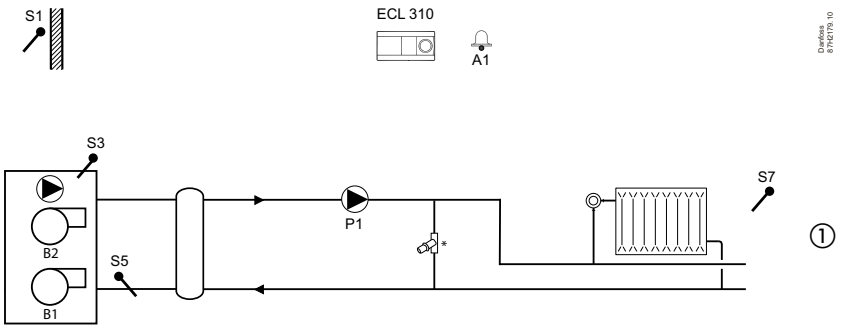

Example c

One boiler with 2 x burner ON / OFF control for a heating circuit. The boiler circuit is equipped with a low loss header.
* = Automatic by-pass valve.

A375.1

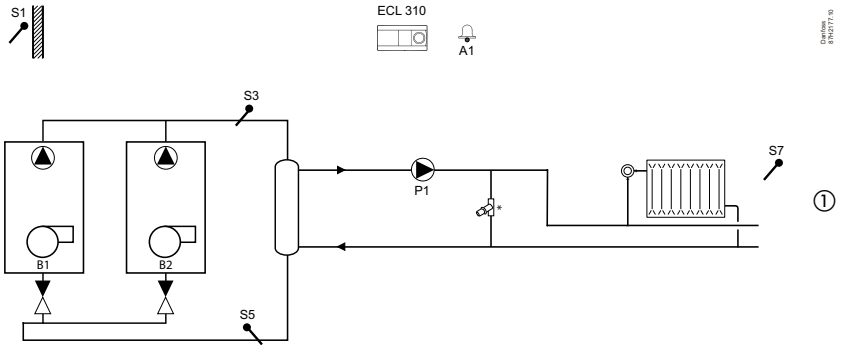

Example d

2 x boiler ON / OFF control for a heating circuit. The boiler circuit is equipped with a low loss header.
* = Automatic by-pass valve.

A375.1

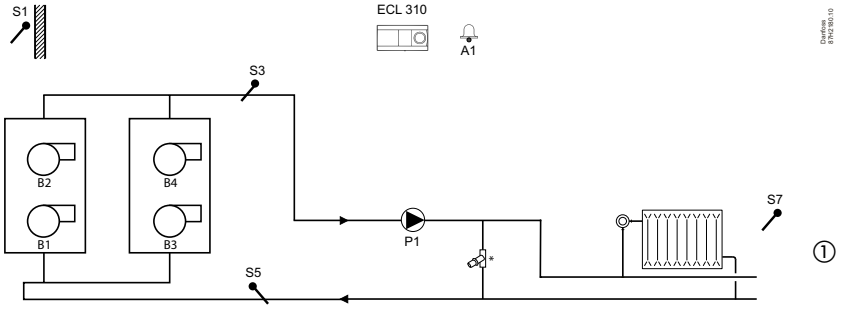

Example e

Two boilers with 2 x burner ON / OFF control for a heating circuit.
* = Automatic by-pass valve.

A375.1

Example f

Up to 4 x boiler ON / OFF control for a heating circuit.

* = Automatic by-pass valve.

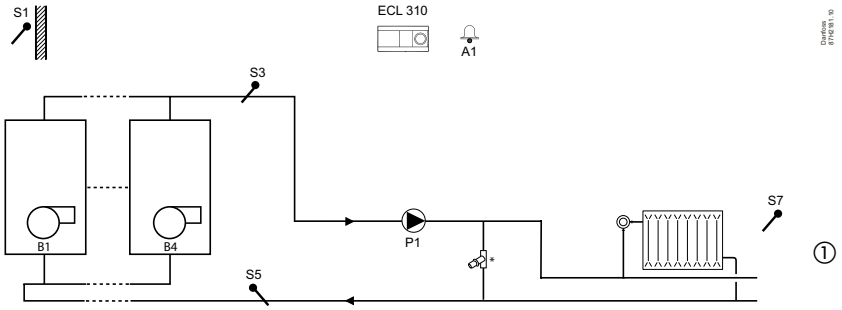

A375.1

Example g

Up to 8 x boiler ON / OFF control for a heating circuit.

* = Automatic by-pass valve.

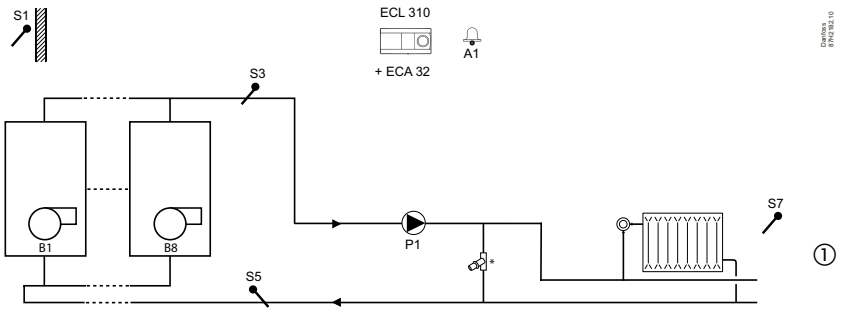

A375.1

Example h

Up to 8 x boiler ON / OFF control for a heating circuit. The first boiler (high efficiency) has highest priority.

* = Automatic by-pass valve.

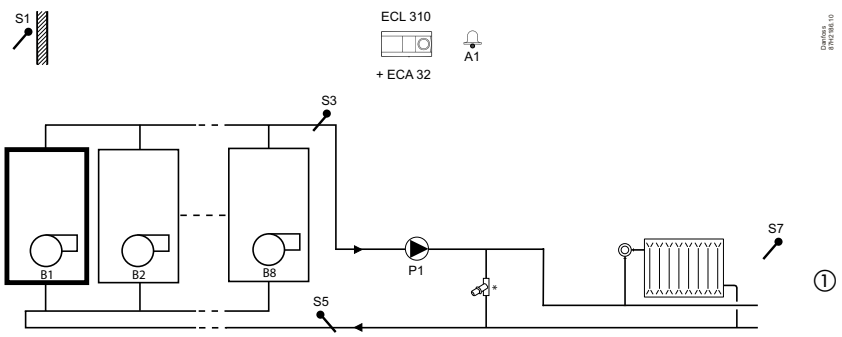

ECL Comfort 210/296/310 Application A275/A375

Weather compensated flow temperature control of 1-stage boiler based heating systems. One direct heating circuit and one mixing circuit. Circulation pumps control, room temperature control and sliding return temperature limitation.
Temperature control of DHW storage tank with internal heat exchanger. Frost protection and alarm function.
The A275 application key contains applications related to ECL Comfort 310 for increased functionalities (multiple boiler stages).

A375.1

Example i

Up to 8 x boiler ON / OFF control for a heating circuit. The first two boilers (high efficiency) have highest priority.
* = Automatic by-pass valve.

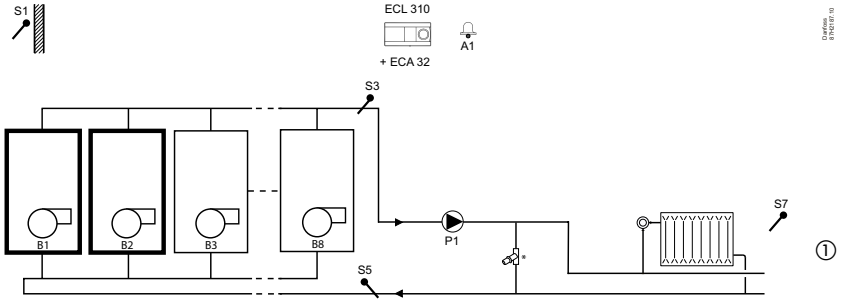

A375.2

Example a

Up to 8 x boiler ON / OFF control for a heating circuit and a DHW circuit.
* = Automatic by-pass valve.

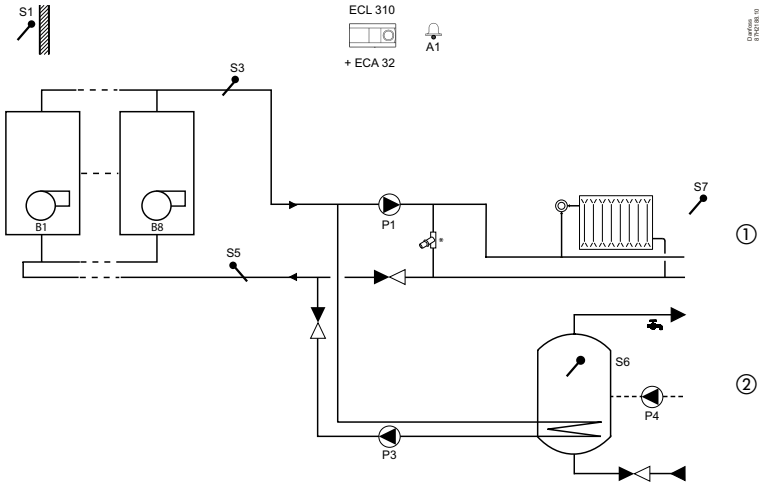

A375.3

Example a

Up to 8 x boiler ON / OFF control for a direct heating circuit (1), a mixing circuit (2) and a DHW circuit (3). Optional DHW priority.
* = Automatic by-pass valve.

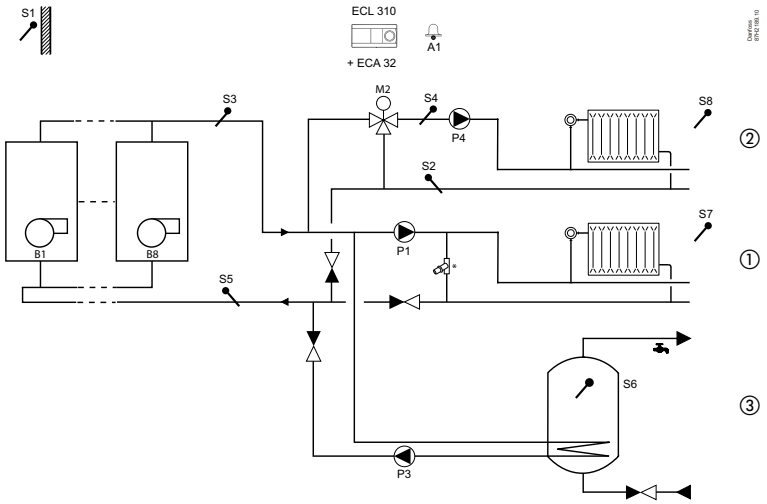

< back to index

A375.4

Example a

Boiler ON / OFF or modulating control for a heating circuit. S9 measures the static pressure.

* = Automatic by-pass valve.

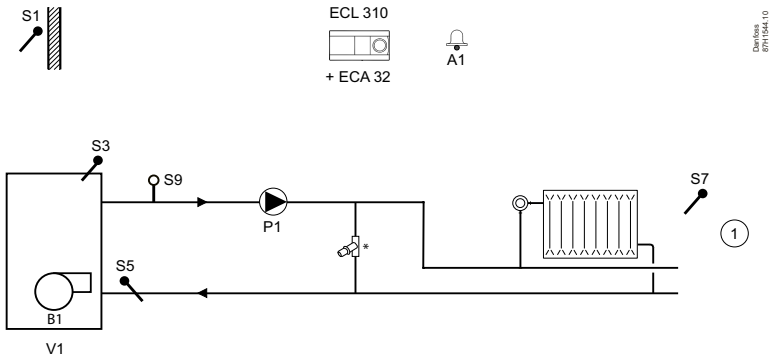

A375.5

Example a

Boiler ON / OFF or modulating control for two heating circuits and one DHW circuit. S9 measures the static pressure.

* = Automatic by-pass valve.

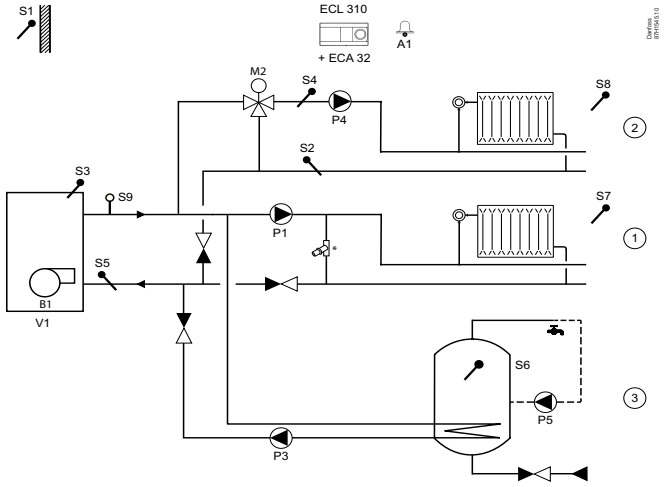

ECL Comfort 310 Application A319

Weather compensated control of flow temperature in a heating circuit, based on an advanced buffer temperature control. Charging pump P2 is speed controlled, based on 0 - 10 Volt or PWM signal. Discharging of buffer is avoided according to built-in logic. Differential pressure (S9) can be maintained by means of speed controlled circulation pump P3 (0 - 10 Volt or PWM).
Optional sliding return temperature limitation.
Relay output (X1) for buffer heating demand; override signal (S10) for remote setting of desired flow temperature.
Alarm functions are related to flow temperatures.

A319.1

Example a

Indirectly connected charging system with 2 temperature sensors in buffer. Heating system connected directly to buffer.

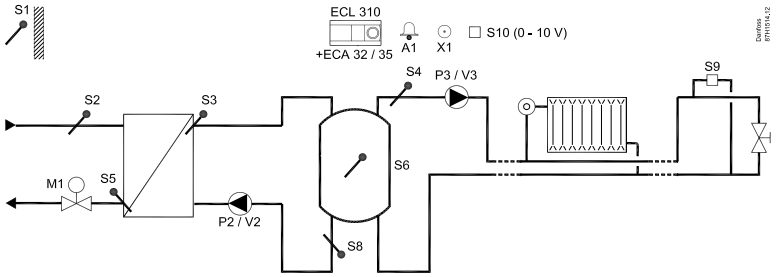

A319.2

Example a

Indirectly connected charging system with 2 temperature sensors in buffer. Heating system connected to buffer via mixing valve.

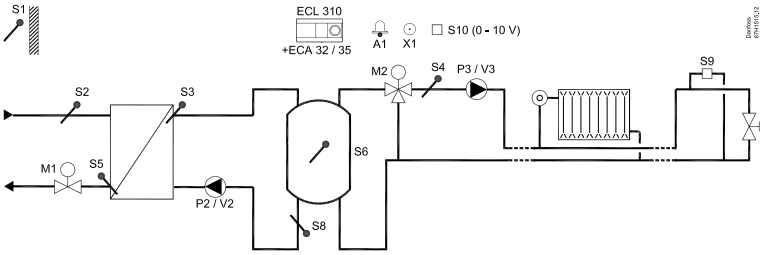

ECL Comfort 310 Application A333

Weather compensated control of flow temperature in heating circuit. Sliding return temperature limitation. Control of one or two circulation pumps. Refill water function for one or two pumps and refill water storage control.
Pressure and temperature monitoring functions.
Alarm function related to flow temperature, pressure and circulation pumps operation.

A333.1

Example a

Indirectly connected heating system with control of two circulation pumps. Refill water function with control of two pumps.

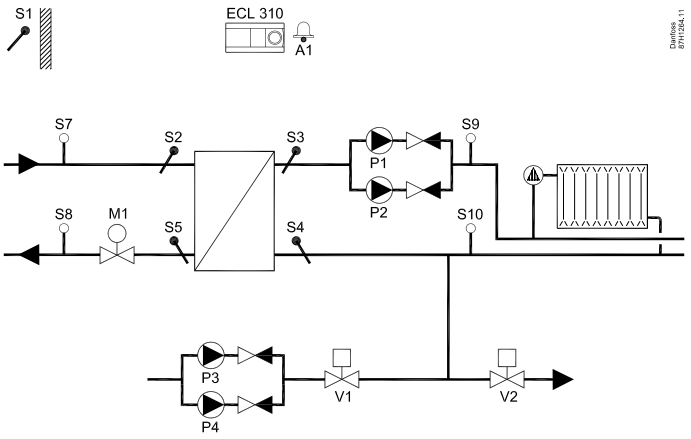

A333.2

Example a

Indirectly connected heating system with control of two circulation pumps (ON / OFF and speed control). Refill water function with control of two pumps (ON / OFF and speed control). Refill water storage control.

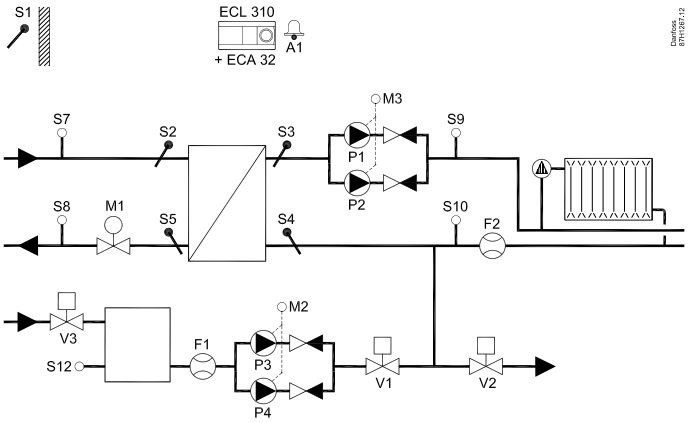

A333.3

Example a

Indirectly connected heating system with control of two circulation pumps (ON / OFF and speed control). 0 - 10 V control of control valve M1. Refill water function with control of two pumps (ON / OFF and speed control). Refill water storage control.

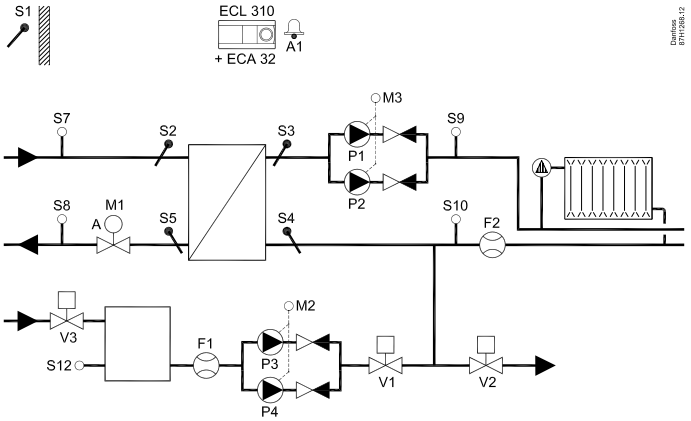

ECL Comfort 310 Application A361

Weather compensated control of flow temperature in two heating circuits. Sliding return temperature limitation. Control of one or two circulation pumps in each heating circuit. Optional control of flow temperature related to supply temperature. Refill water function.
Alarm function related to flow temperature, pressure and circulation pumps operation.

A361.1

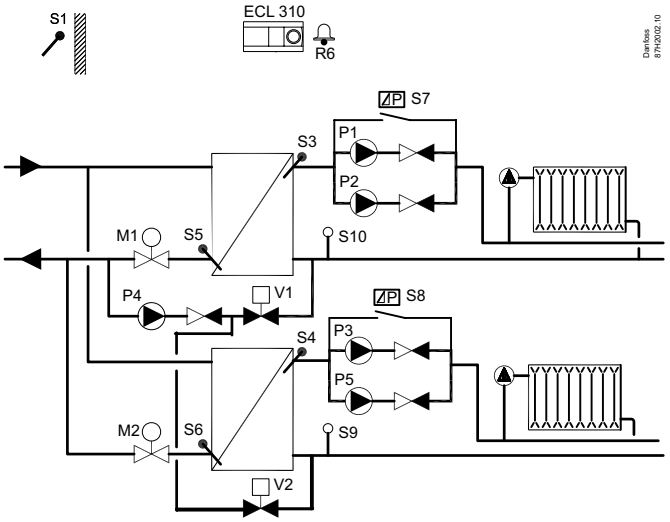

Example a

Indirectly connected heating systems with two-pump control and refill water function.

A361.2

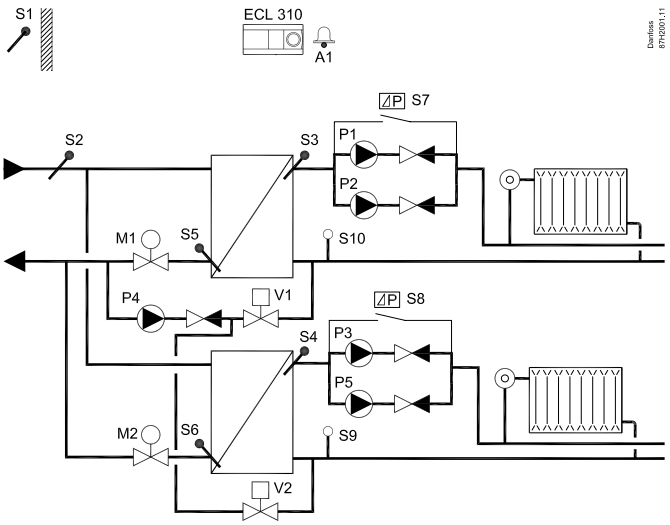

Example a

Indirectly connected heating systems with two-pump control and refill water function (supply temperature measurement gives further control / limitation possibilities).

ECL Comfort 310 Application A362

Weather compensated control of flow temperature in a heating circuit, based on advanced cascade control of 2 heat exchangers (HEX). Control valve characteristics are taken into consideration and flow in unused HEX circuit can be stopped. Optional sliding return temperature limitation. Scheduled shift for inversed cascade (HEX-1 - HEX-2 and HEX-2 - HEX-1) can be set. Override inputs for start of HEX-1 and HEX-2 are available. M-Bus based signal can be used for flow / energy limitation.
Up to 6 heat exchangers can be cascade controlled by 1, 2 or 3 ECL Comfort 310 controllers, each equipped with the application key A362; the ECL controllers are interconnected by means of the ECL 485 Bus. Alarm functions are related to flow and flow temperatures.

A362.1

Example a

Indirectly connected system with 2 x HEX, each managed by means of a 0 - 10 Volt controlled motorized control valve (MCV). Each HEX circuit has its own circulation pump.

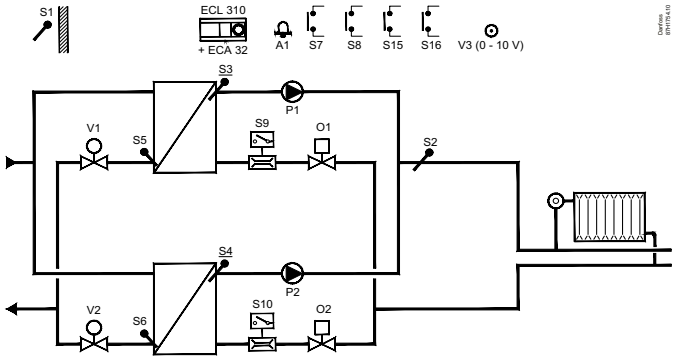

A362.1

Example b

Indirectly connected system with 2 x HEX, each managed by means of a 0 - 10 Volt controlled MCV.
One circulation pump is common.

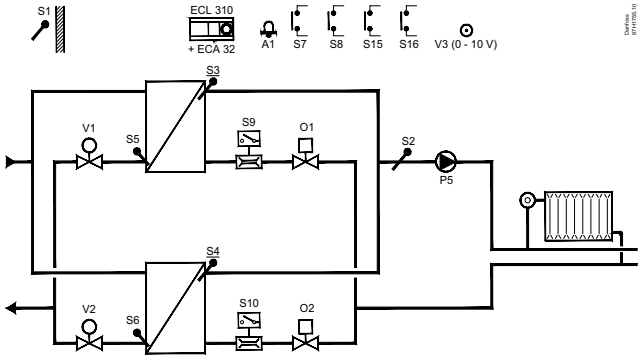

A362.1

Example c

Indirectly connected system with 2 x HEX, each managed by means of a 3-point controlled MCV with position feedback.
Each HEX circuit has its own circulation pump, but a common circulation pump can be used.

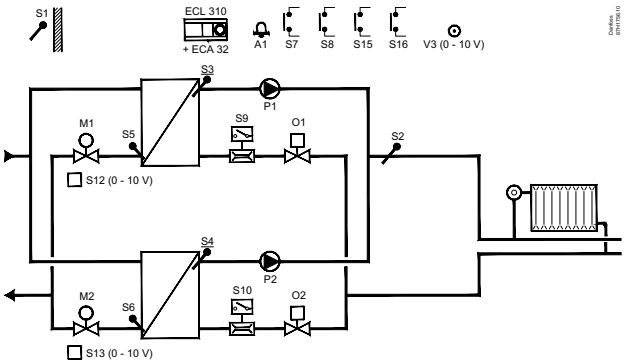

A362.1

Example d

Indirectly connected system with 2 x HEX, each managed by means of one 0 - 10 Volt controlled MCV and one 3-point controlled MCV with position feedback. Each HEX circuit has its own circulation pump, but a common circulation pump can be used.

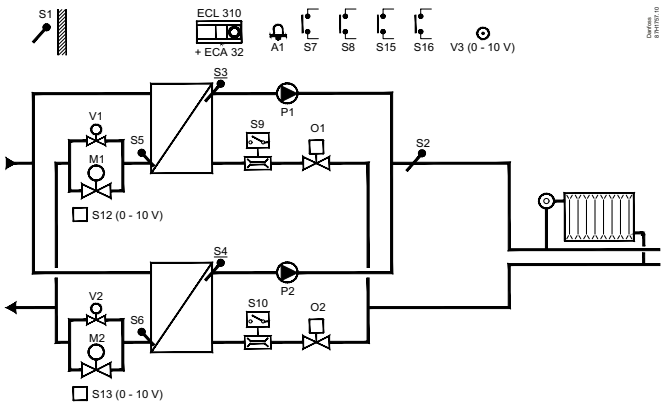

ECL Comfort 310
ECL Comfort 210
ECL Comfort 296
A247
ECL Comfort
210/310
087H3808

ECL Comfort 310
HOH

ECL Comfort 310 Application A367

Weather compensated control of flow temperature in two heating circuits. Room temperature compensation and sliding return temperature limitation. Heating circuits work independent in parallel or circuit 2 after circuit 1.
Temperature control in DHW circuit with storage tank, directly heated or charging system. Return temperature limitation. DHW priority. Alarm function related to flow temperatures.

A367.1

Example a

Indirectly connected system with 2 heating circuits and secondarily connected DHW tank with internal heat exchanger (optional DHW priority).

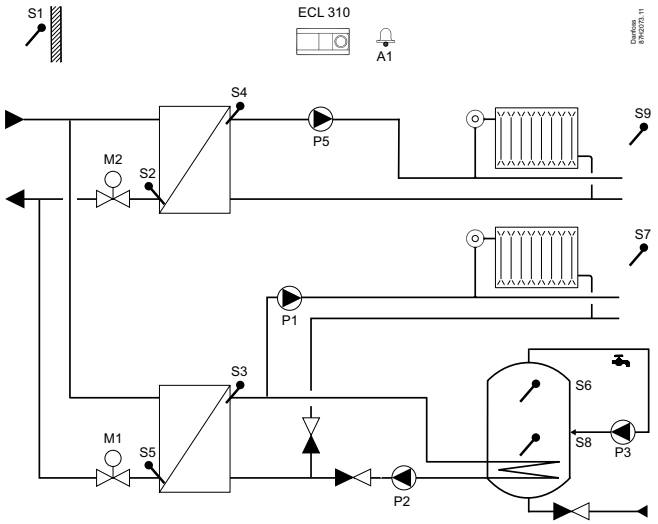

A367.1

Example b

Indirectly connected system with 2 heating circuits and secondarily connected DHW tank with internal heat exchanger (DHW priority).

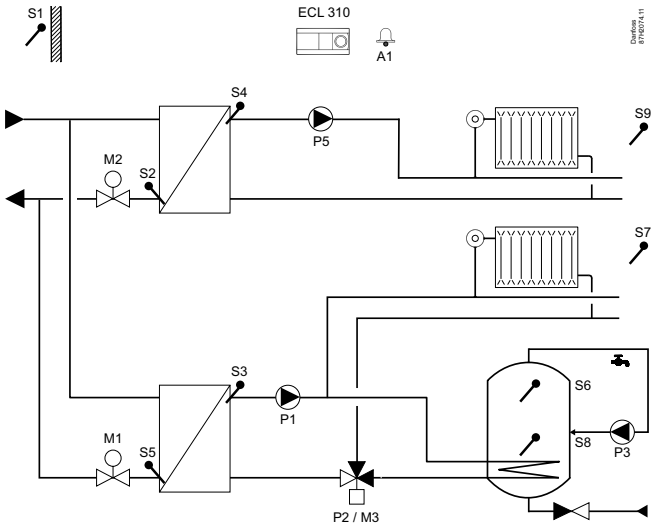

A367.1

Example c

Indirectly connected system with 2 heating circuits and primarily connected DHW tank with internal heat exchanger (optional DHW priority).

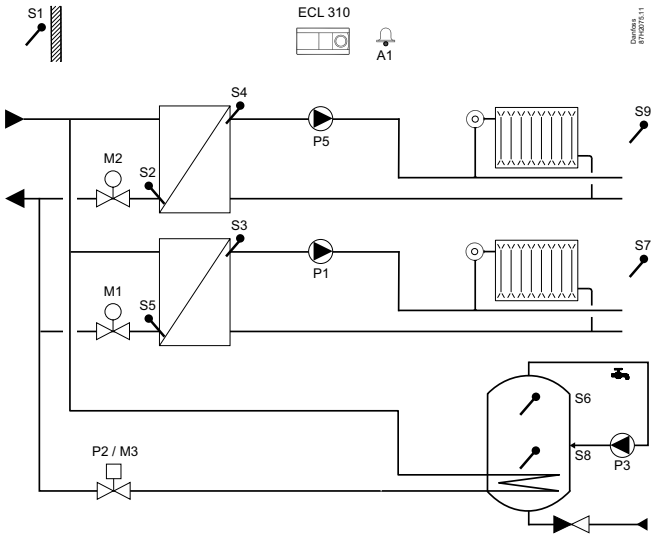

A367.1

Example d

Indirectly connected system with 2 heating circuits (one connected as sub circuit) and secondarily connected DHW tank with internal heat exchanger (optional DHW priority).

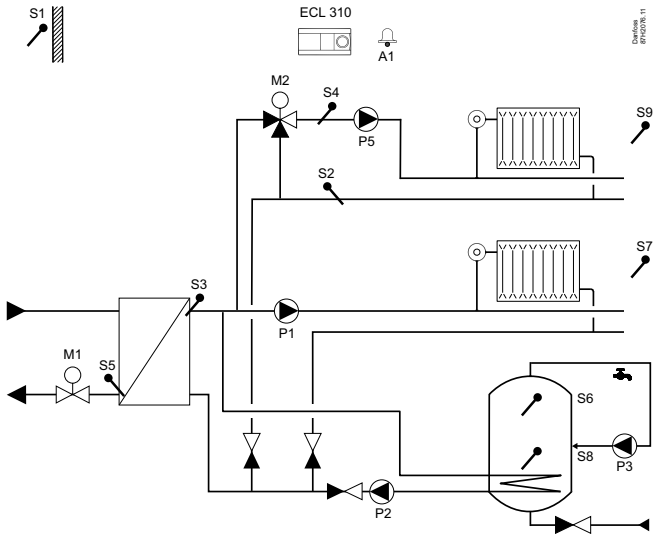

A367.1

Example e

Indirectly connected system with 2 heating circuits (one connected as sub circuit) and primarily connected DHW tank with internal heat exchanger (optional DHW priority).

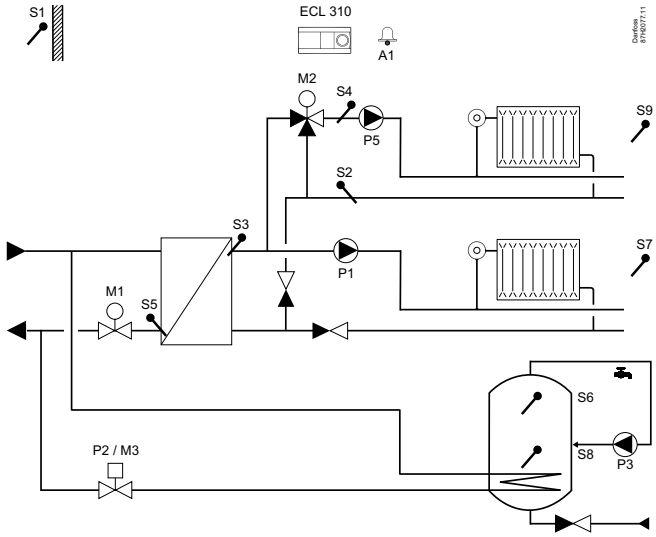

ECL Comfort 310 Application A367

Weather compensated control of flow temperature in two heating circuits. Room temperature compensation and sliding return temperature limitation. Heating circuits work independent in parallel or circuit 2 after circuit 1.
Temperature control in DHW circuit with storage tank, directly heated or charging system. Return temperature limitation. DHW priority. Alarm function related to flow temperatures.

A367.2

Example a

Indirectly connected system with 2 heating circuits and secondarily connected DHW charging system (optional DHW priority).

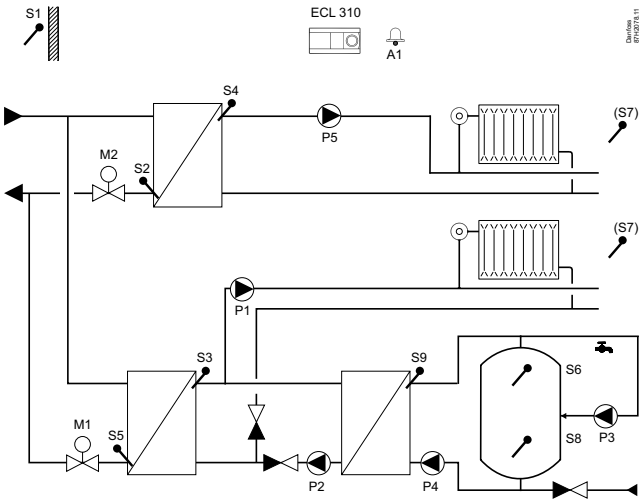

A367.2

Example b

Indirectly connected system with 2 heating circuits and secondarily connected DHW charging system (DHW priority).

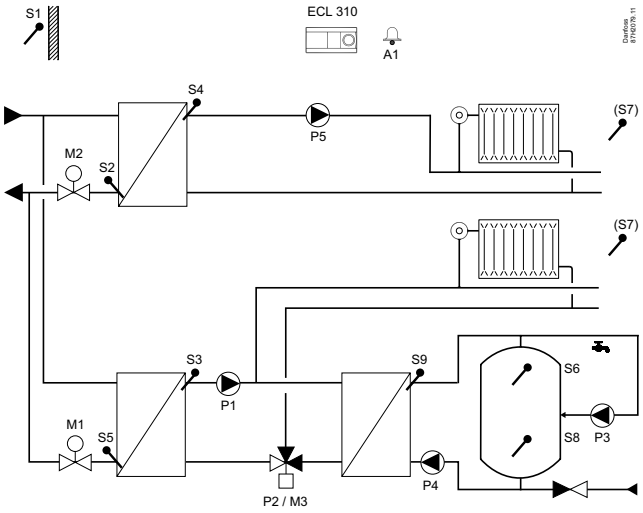

A367.2

Example c

Indirectly connected system with 2 heating circuits (one connected as sub circuit) and secondarily connected DHW charging system (optional DHW priority).

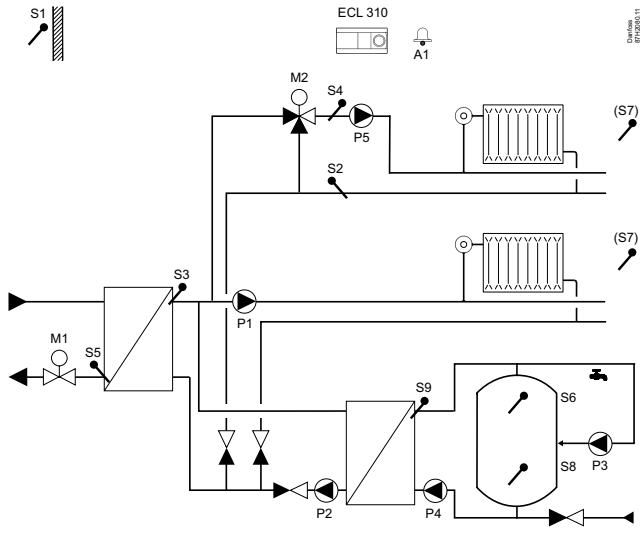

ECL Comfort 310 Application A368

Weather compensated control of flow temperature in heating circuit. Sliding return temperature limitation. Control of one or two circulation pumps. Optional control of flow temperature related to supply temperature. Refill water function for one or two pumps.
Flow temperature control in DHW circuit. Return temperature limitation. Sliding DHW priority possibility. Control of one or two circulation pumps.
Alarm function related to flow temperature, pressure and circulation pumps operation.

A368.1

Example a

Indirectly connected heating and DHW system with two-pump control and refill water function.

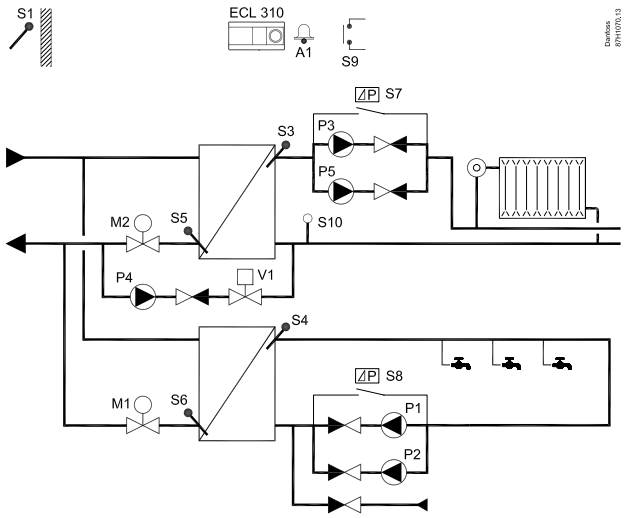

A368.2

Example a

Indirectly connected heating and DHW system with two-pump control and refill water function (supply temperature measurement gives further control / limitation possibilities).

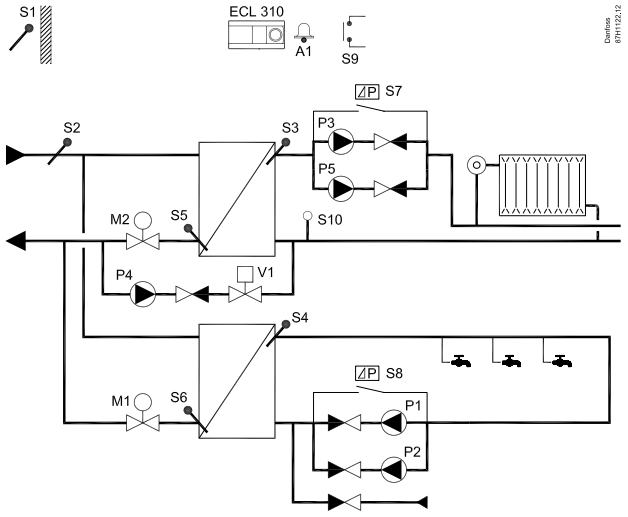

A368.3

Example a

Indirectly connected heating and DHW system with two-pump control and refill water function. Pressure measurements in the system.

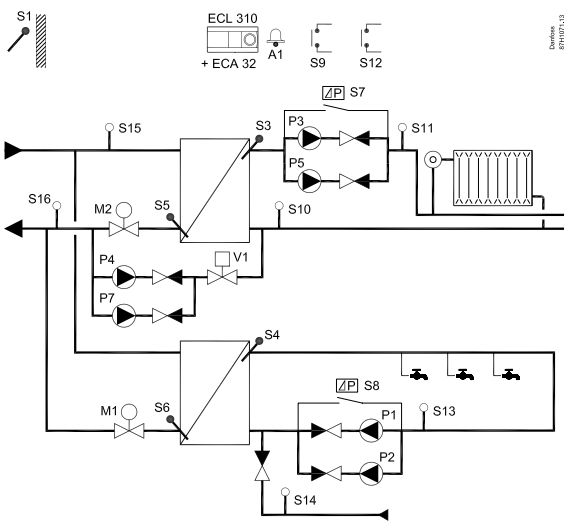

ECL Comfort 310 Application A368

Weather compensated control of flow temperature in heating circuit. Sliding return temperature limitation. Control of one or two circulation pumps. Optional control of flow temperature related to supply temperature. Refill water function for one or two pumps.
Flow temperature control in DHW circuit. Return temperature limitation. Sliding DHW priority possibility. Control of one or two circulation pumps.
Alarm function related to flow temperature, pressure and circulation pumps operation.

A368.4

Example a

Indirectly connected heating and DHW system with two-pump control and refill water function. Supply temperature measurement gives further control / limitation possibilities. Pressure measurements in the system.

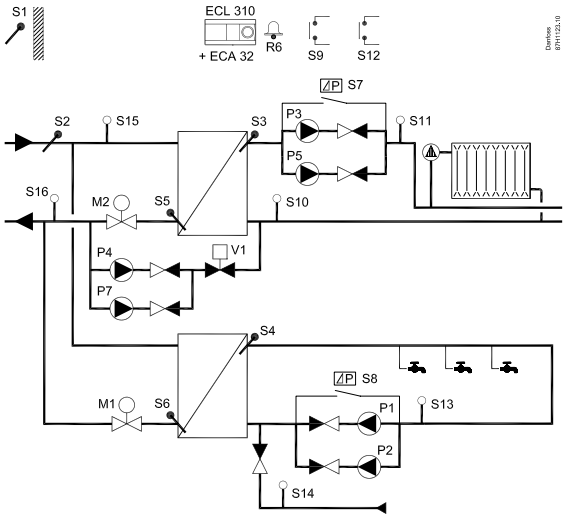

A368.5

Example a

Indirectly connected heating and DHW system with two circulation pump control and refill water function with volume measurement. Monitoring of secondary return temperatures. Monitoring of pressures.

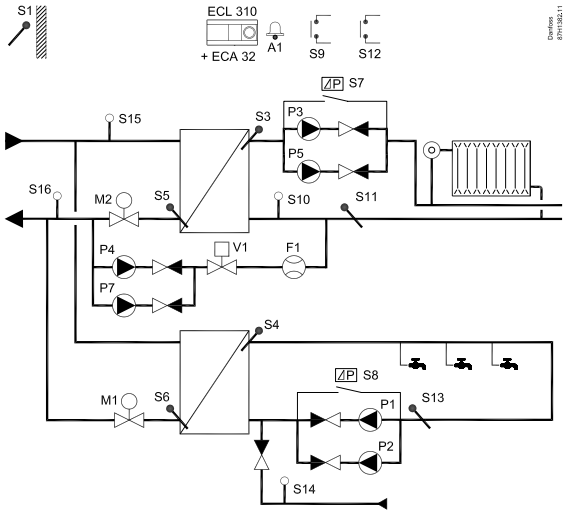

A368.6

Example a

Indirectly connected heating and DHW system with two circulation pump control and refill water function. Monitoring of secondary return temperatures. Monitoring of pressure in heating circuit.

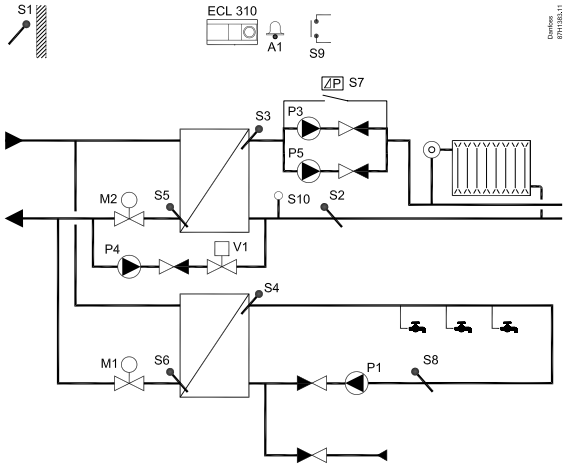

< back to index

ECL Comfort 310 Application A376

Weather compensated control of flow temperature in two heating circuits. Room temperature compensation and sliding return temperature limitation. Heating circuits work independent in parallel or circuit 2 after circuit 1. Flow temperature control in DHW circuit. Return temperature limitation. Sliding DHW priority possibility. Optional DHW temperature control related to DHW flow detection. Alarm functions related to flow temperatures, pressures and extra alarm input. Optional control of motorized control valves by means of analog signal (0-10 volt).

A376.1

Example a

Indirectly connected heating and DHW system (typically district heating).

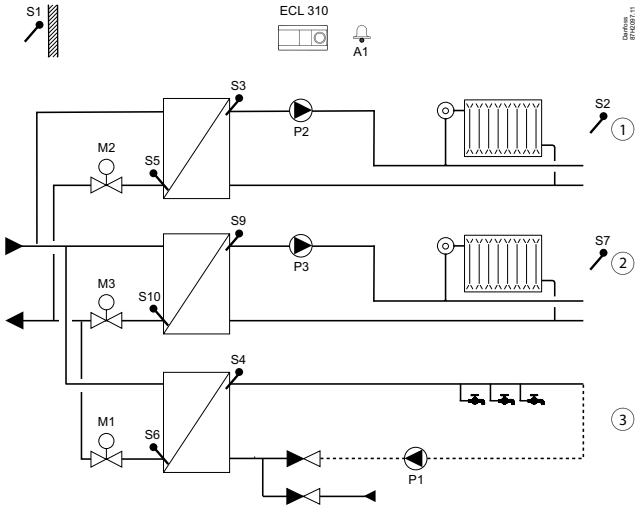

A376.1

Example b

Indirectly connected heating and DHW system (typically district heating).
Heating circuit 2 is connected as a sub-circuit of heating circuit 1. Alternatively, heating circuit 2 can be a floor heating circuit.

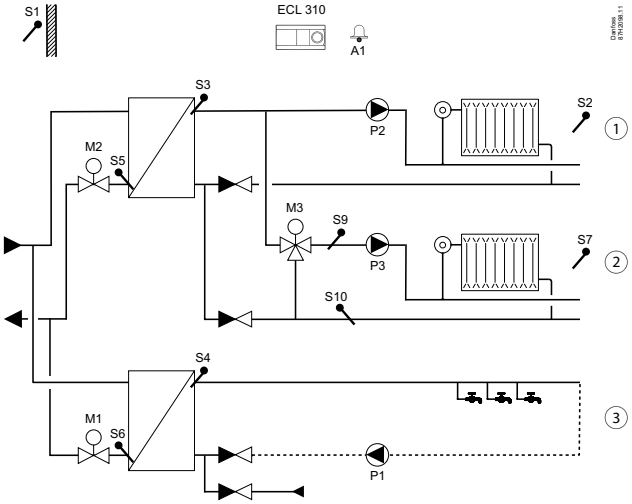

A376.2

Example a

Indirectly connected heating and DHW system with flow switch ((DHW heating on demand).

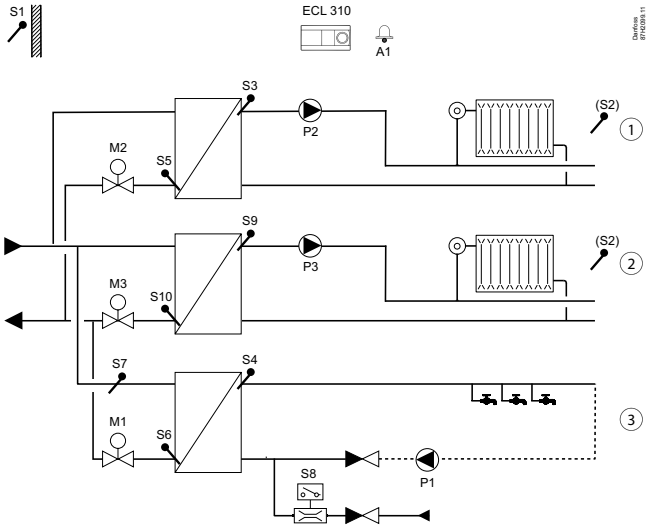

ECL Comfort 310 Application A376

Weather compensated control of flow temperature in two heating circuits. Room temperature compensation and sliding return temperature limitation. Heating circuits work independent in parallel or circuit 2 after circuit 1.
Flow temperature control in DHW circuit. Return temperature limitation. Sliding DHW priority possibility. Optional DHW temperature control related to DHW flow detection.
Alarm functions related to flow temperatures, pressures and extra alarm input.
Optional control of motorized control valves by means of analog signal (0-10 volt).

A376.2

Example b

Indirectly connected heating and DHW system with flow switch (DHW heating on demand). Heating circuit 2 is connected as a sub-circuit of heating circuit 1. Alternatively, heating circuit 2 can be a floor heating circuit.

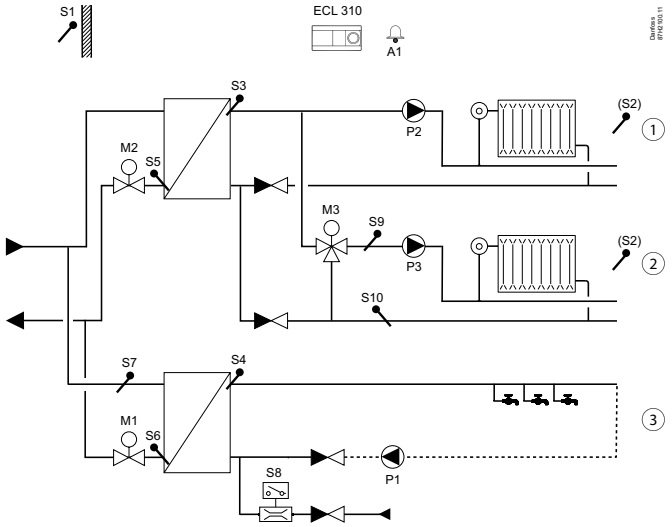

A376.3

Example a

Indirectly connected heating and DHW system (typically district heating). Motorized control valves are controlled by means of analog signals (0–10 V).

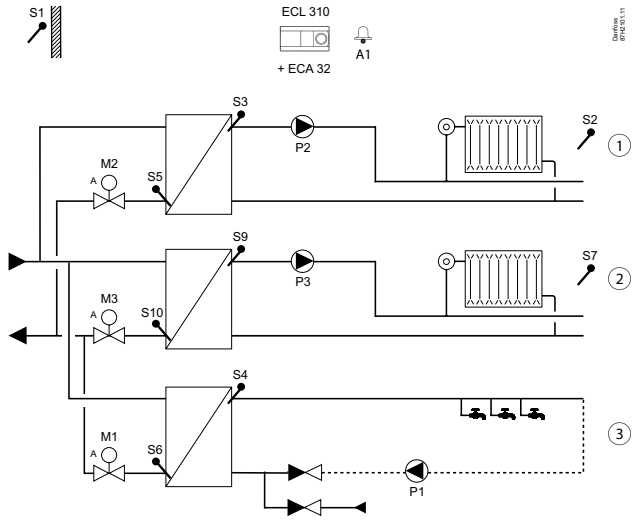

A376.3

Example b

Indirectly connected heating and DHW system (typically district heating). Motorized control valves are controlled by means of analog signals (0–10 V). Heating circuit 2 is connected as a sub-circuit of heating circuit 1. Alternatively, heating circuit 2 can be a floor heating circuit.

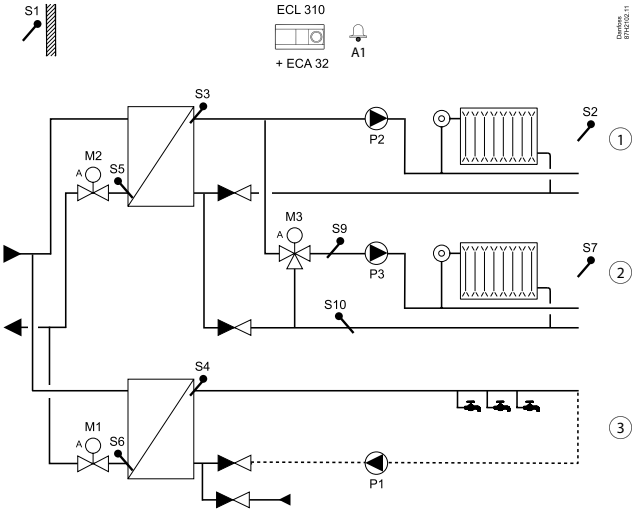

A376.4

Example a

Indirectly connected system with 1 heating circuit, 1 directly DHW heating circuit and 1 directly DHW heating circuit with flow switch (DHW heating on demand).

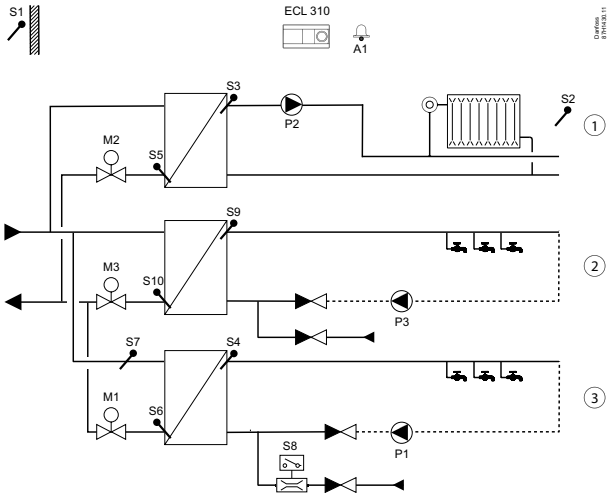

A376.9

Example a

Indirectly connected heating and DHW system with pressure transmitters and alarm input (typically district heating).

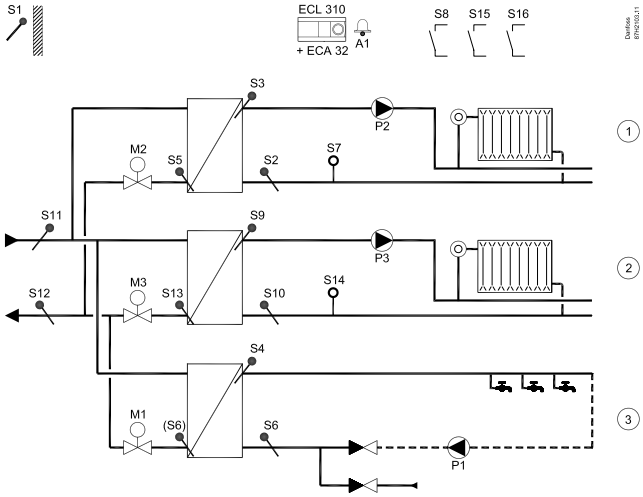

ECL Comfort 310 Application A376

Weather compensated control of flow temperature in two heating circuits. Room temperature compensation and sliding return temperature limitation. Heating circuits work independent in parallel or circuit 2 after circuit 1.
Flow temperature control in DHW circuit. Return temperature limitation. Sliding DHW priority possibility. Optional DHW temperature control related to DHW flow detection.
Alarm functions related to flow temperatures, pressures and extra alarm input.
Optional control of motorized control valves by means of analog signal (0-10 volt).

A376.9

Example b

Indirectly connected heating and DHW system with pressure transmitters and alarm input (typically district heating). Heating circuit 2 is connected as a sub-circuit of heating circuit 1. Alternatively, heating circuit 2 can be a floor heating circuit.

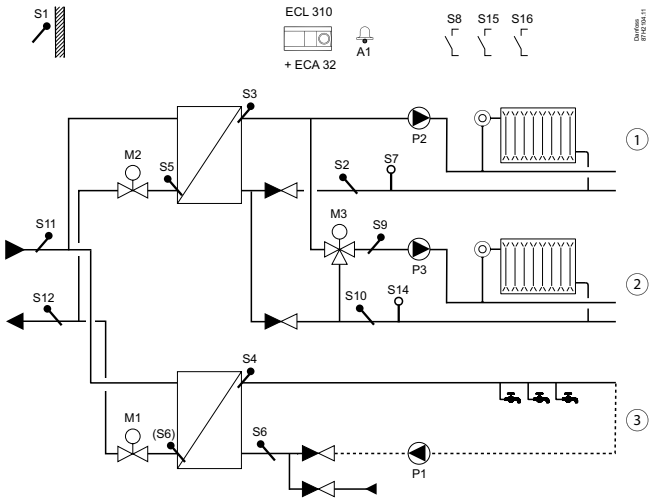

A376.10

Example a

Indirectly connected heating and DHW system with pressure transmitters and alarm input (typically district heating). Monitoring of secondary return temperatures.

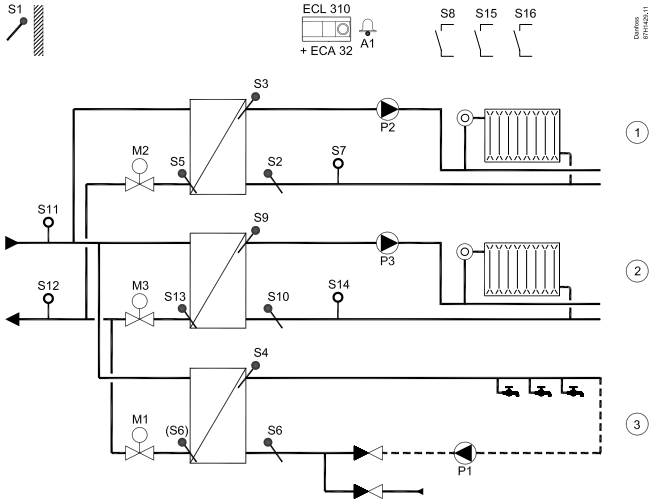

ECL Comfort 310 Application A377

Weather compensated control of flow temperature in two heating circuits. Room temperature compensation and sliding return temperature limitation. Heating circuits work independent in parallel or circuit 2 after circuit 1.
Temperature control in DHW circuit with storage tank, directly heated or charging system. Return temperature limitation. DHW priority. Optional temperature control of DHW heating temperature.
Alarm function related to flow temperatures.

A377.1

Example a

Indirectly connected heating systems and DHW charging system (optional DHW priority).

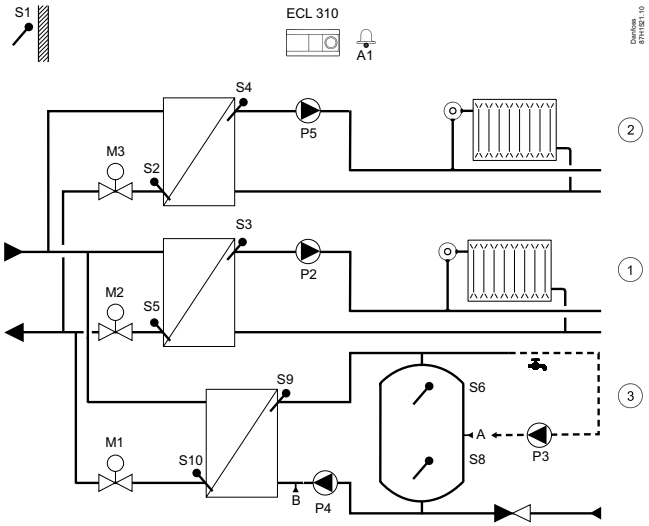

A377.1

Example b

Indirectly connected heating systems and DHW charging system (optional DHW priority). Heating circuit 2 is connected as a sub-circuit of heating circuit 1. Alternatively, heating circuit 2 can be a floor heating circuit.

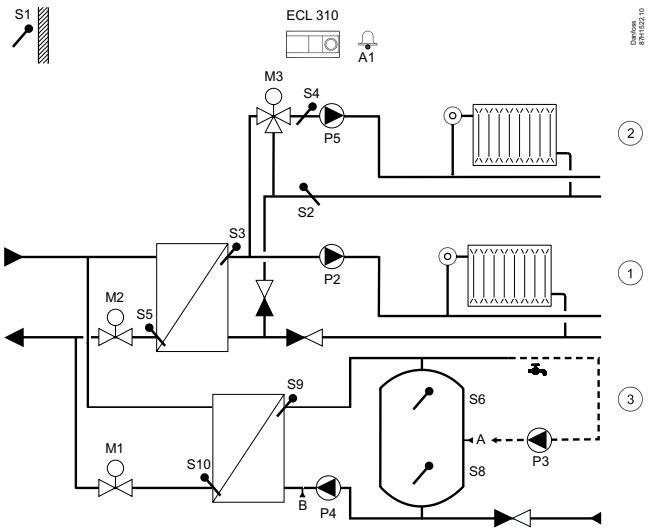

A377.1

Example c

Indirectly connected heating systems and DHW charging system with preheating circuit control and optional DHW priority. Heating circuit 2 is connected as a sub-circuit of heating circuit 1. Alternatively, heating circuit 2 can be a floor heating circuit.

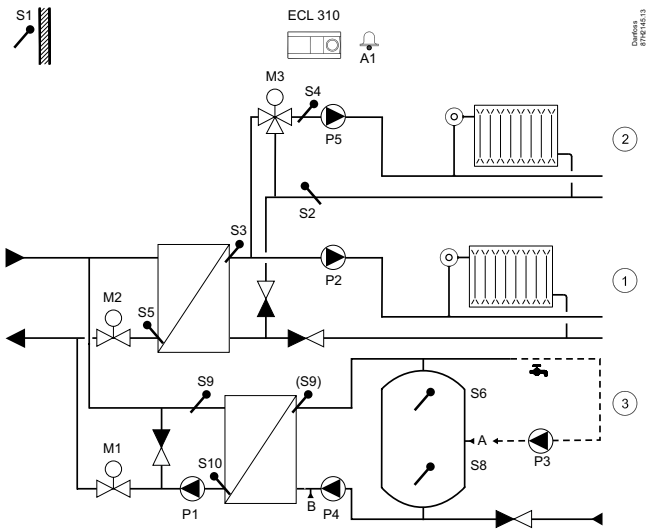

ECL Comfort 310 Application A377

Weather compensated control of flow temperature in two heating circuits. Room temperature compensation and sliding return temperature limitation. Heating circuits work independent in parallel or circuit 2 after circuit 1.
Temperature control in DHW circuit with storage tank, directly heated or charging system. Return temperature limitation. DHW priority. Optional temperature control of DHW heating temperature.
Alarm function related to flow temperatures.

A377.2

Example a

Indirectly connected heating systems and DHW charging system (optional DHW priority). Alternatively, heating circuit 2 can be a floor heating circuit. The DHW tank charging has adaptive and pre-controlled charging temperature.

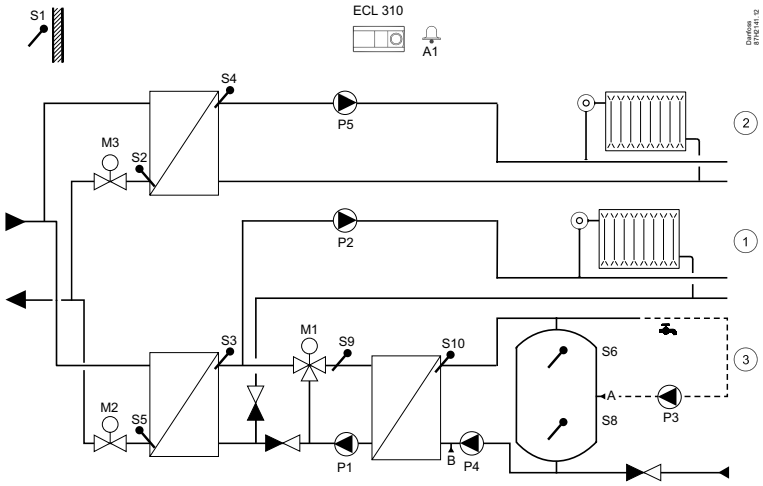

A377.2

Example b

Indirectly connected heating systems and DHW charging system (optional DHW priority). Heating circuit 2 is connected as a sub-circuit of heating circuit 1. Alternatively, heating circuit 2 can be a floor heating circuit. The DHW tank charging has adaptive and pre-controlled charging temperature.

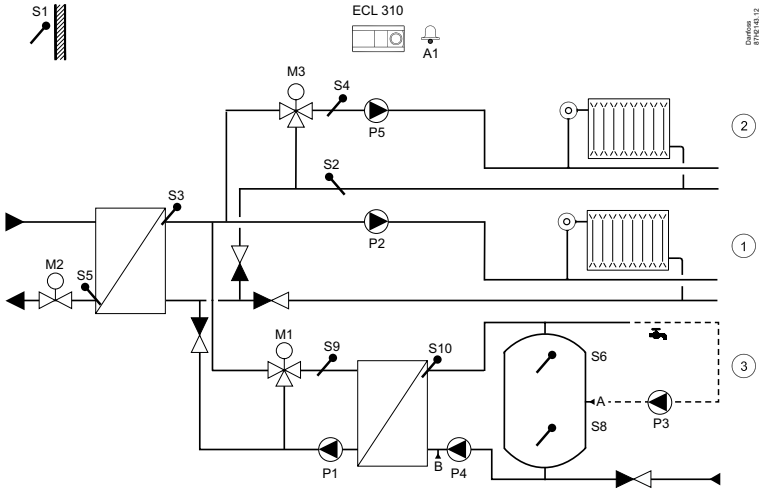

A377.2

Example c

Indirectly connected system with heating circuit and DHW tank charging circuit with pre-controlled charging temperature. Optional DHW priority.

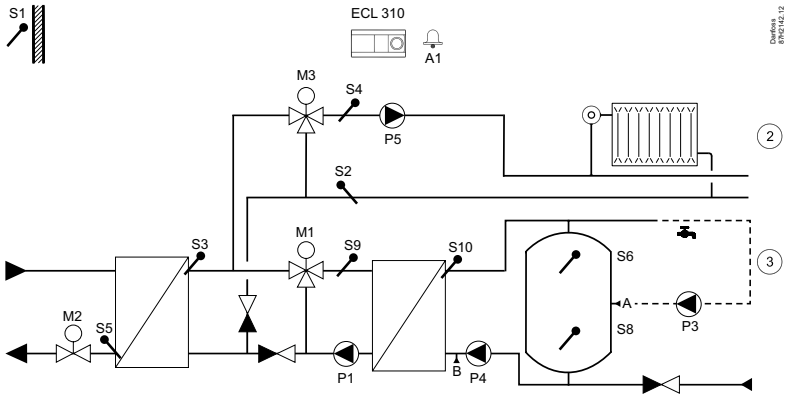

A377.3

Example a

Indirectly connected heating systems and advanced DHW charging system (optional DHW priority). Monitoring of return temperature in DHW circulation.

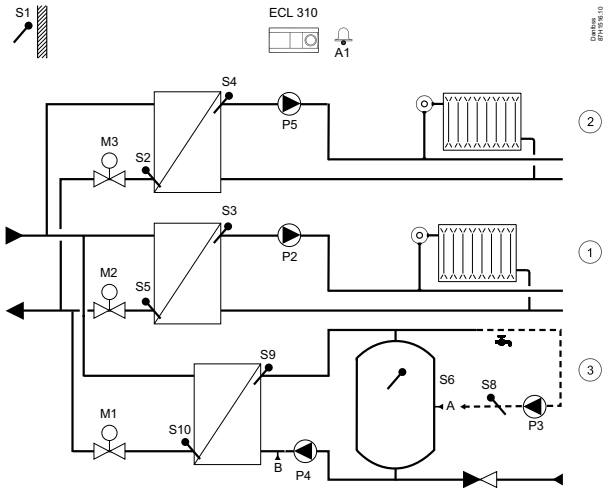

ECL Comfort 310 Application A390

Weather compensated control of flow temperature in heating circuits. Room temperature compensation and sliding return temperature limitation. Heating circuits work independent in parallel or circuit 2 / 3 after circuit 1.
Optional control of motorized control valves by means of analog signal, 0 - 10 volt, (A390.2 only).
Temperature control in DHW circuit with storage tank, directly heated or charging system. Return temperature limitation. Optional DHW priority. Flow temperature control of 3 cooling circuits with room temperature compensation and return temperature limitation. Cooling circuits work independent in parallel or circuit 2 and 3 after circuit 1.
Alarm function related to flow temperatures.

A390.1

Example a

3 x indirectly connected heating systems.

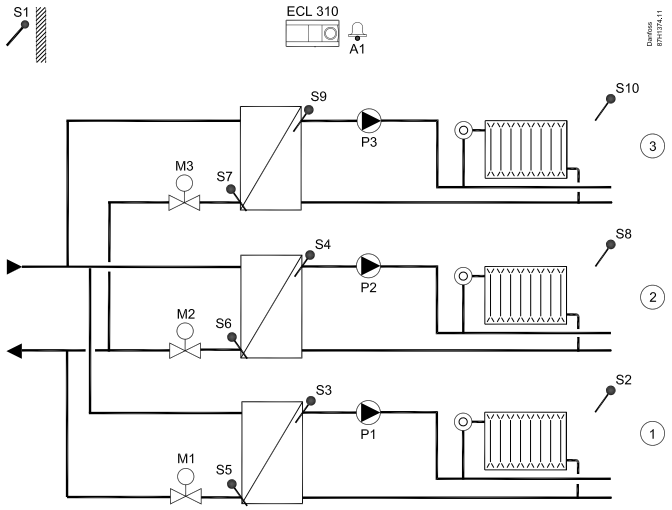

A390.1

Example b

3 x directly connected heating systems.

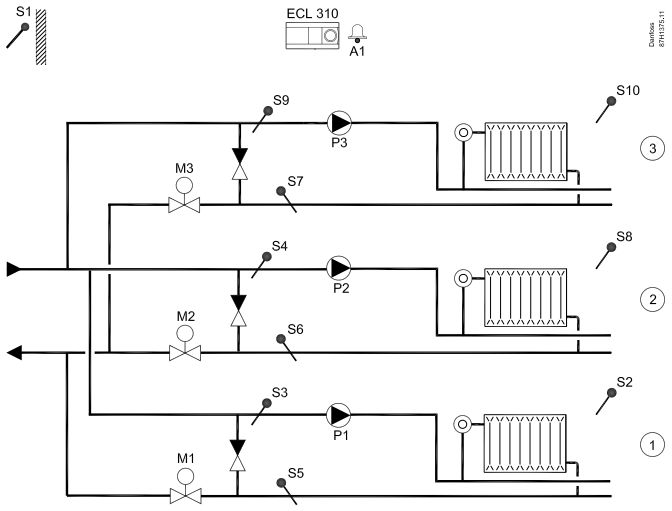

A390.1

Example c

3 x indirectly connected heating systems. Two heating circuits are sub-circuits.

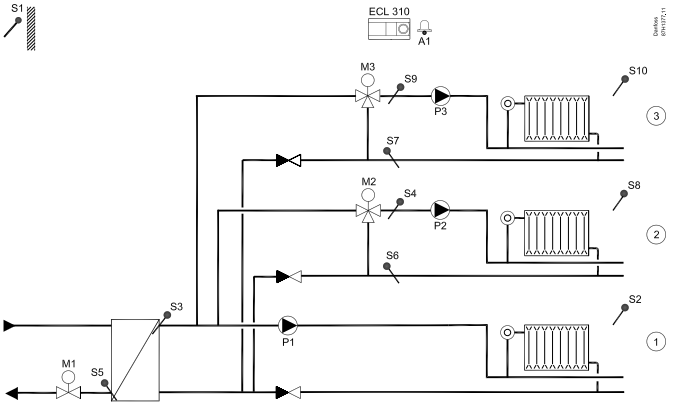

Subtypes A390.3, A390.11, A390.12 and A390.13 have for the control valve 3-point outputs as well as 0 – 10 V outputs.

A390.2

Example a

3 x indirectly connected heating circuits. The actuators for the control valves are controlled by means of 0 - 10 Volt signal

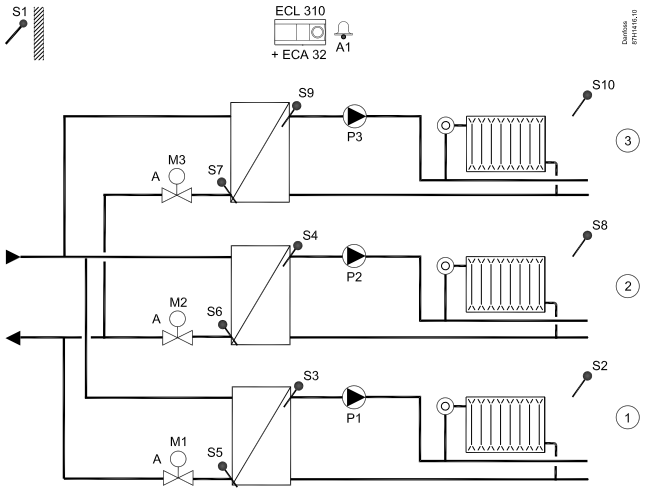

A390.3

Example a

3 x indirectly connected cooling circuits. Cooling to the rooms can be an Air Handling Unit (AHU).

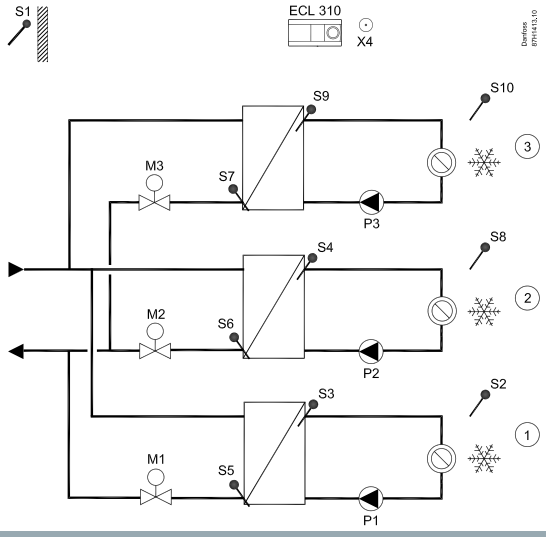

A390.3

Example b

3 x indirectly connected cooling circuits. Two cooling circuits are sub-circuits. Cooling to the rooms can be an Air Handling Unit (AHU).

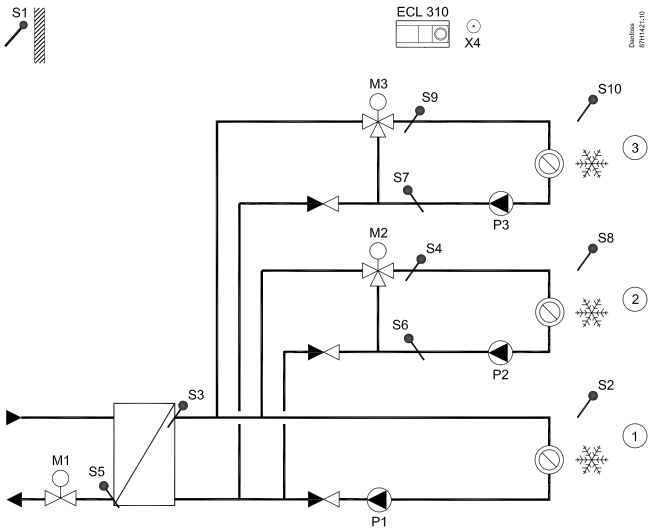

ECL Comfort 310 Application A390

Weather compensated control of flow temperature in heating circuits. Room temperature compensation and sliding return temperature limitation. Heating circuits work independent in parallel or circuit 2 / 3 after circuit 1.
Optional control of motorized control valves by means of analog signal, 0 - 10 volt, (3 x heating circuits only).
Temperature control in DHW circuit with storage tank, directly heated or charging system. Return temperature limitation.
Optional DHW priority. Flow temperature control of 3 cooling circuits with room temperature compensation and return temperature limitation. Cooling circuits work independent in parallel or circuit 2 and 3 after circuit 1.
Alarm function related to flow temperatures.

A390.11

Example a

Three independent heating circuits. The heating circuits are indirectly connected. DHW charging circuit 4 is combined with circuit 1.
Optional DHW priority.

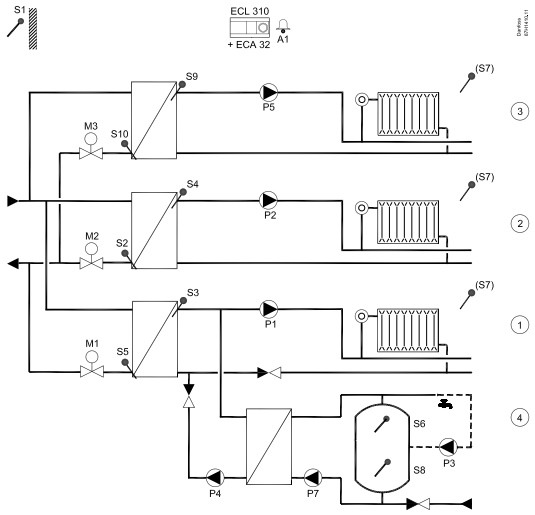

A390.11

Example b

Three independent heating circuits. The heating circuits are indirectly connected. DHW heating circuit 4 is combined with circuit 1.
Optional DHW priority.

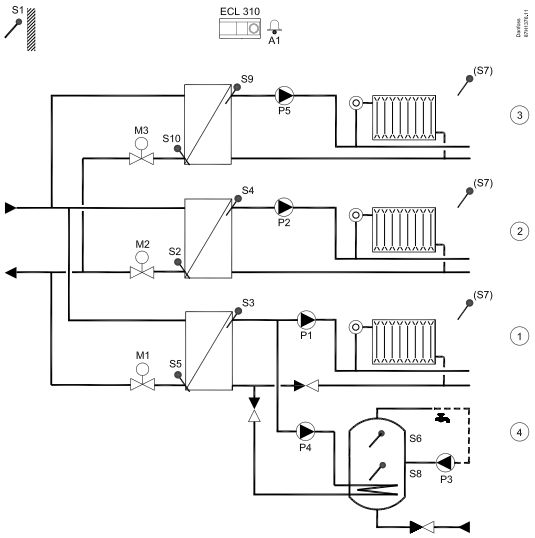

A390.11

Example c

Three independent heating circuits. The heating circuits are indirectly connected. DHW heating circuit 4 is combined with circuit 1. DHW priority.

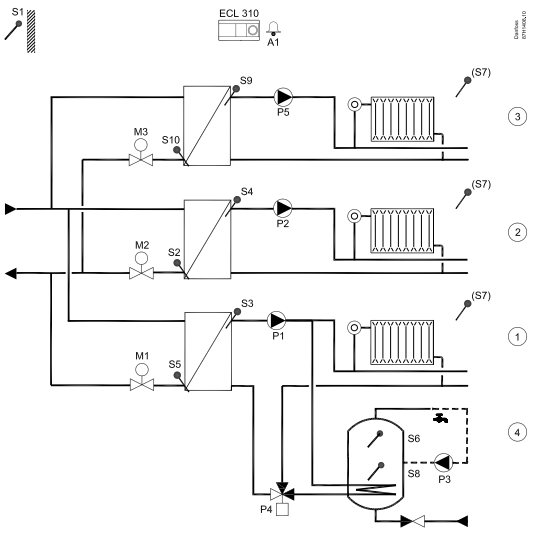

Subtypes A390.3, A390.11, A390.12 and A390.13 have for the control valve 3-point outputs as well as 0 – 10 V outputs.

A390.11

Example d

The heating circuits are indirectly connected. Two heating circuits are sub-circuits to heating circuit 1.
DHW heating circuit 4 is combined with circuit 1. DHW priority.

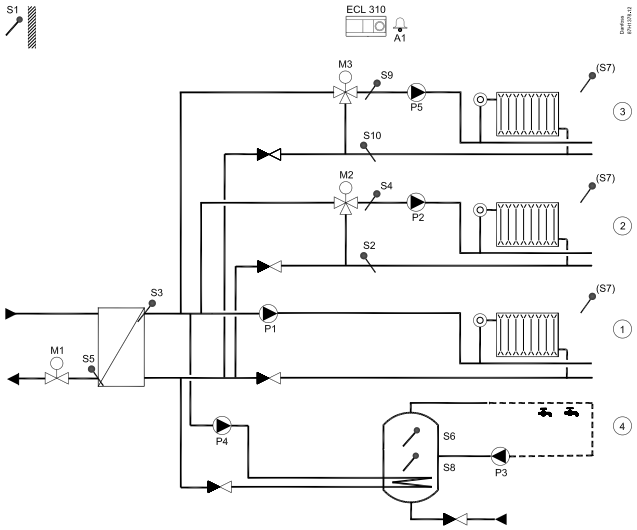

A390.11

Example e

Three independent and indirectly connected heating circuits. DHW heating circuit 4 is directly heated.

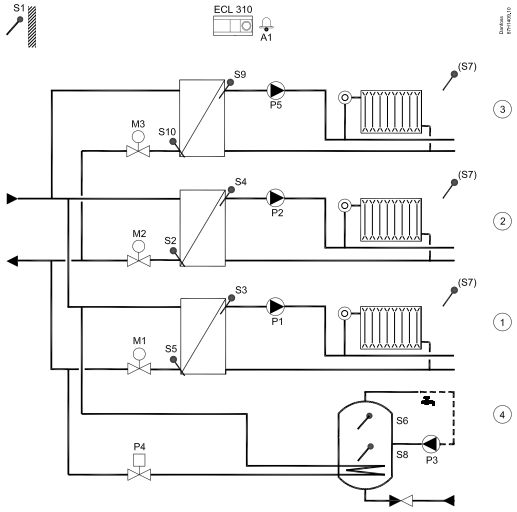

A390.12

Example a

Two indirectly connected heating circuits. One advanced DHW charging circuit. Optional DHW priority.

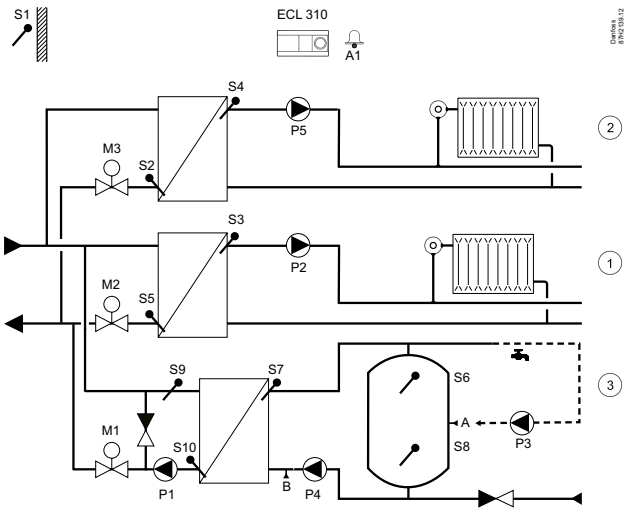

ECL Comfort 310 Application A390

Weather compensated control of flow temperature in heating circuits. Room temperature compensation and sliding return temperature limitation. Heating circuits work independent in parallel or circuit 2 / 3 after circuit 1.
Optional control of motorized control valves by means of analog signal, 0 - 10 volt, (3 x heating circuits only).
Temperature control in DHW circuit with storage tank, directly heated or charging system. Return temperature limitation.
Optional DHW priority. Flow temperature control of 3 cooling circuits with room temperature compensation and return temperature limitation. Cooling circuits work independent in parallel or circuit 2 and 3 after circuit 1.
Alarm function related to flow temperatures.

A390.12

Example b

Two indirectly connected heating circuits. Heating circuit 2 is a sub-circuit to heating circuit 1. One advanced DHW charging circuit. Optional DHW priority.

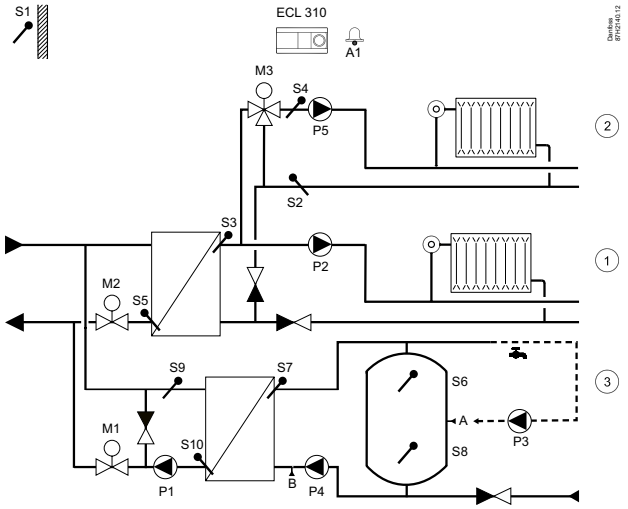

A390.13

Example a

Two indirectly connected heating circuits and one DHW charging circuit. Always DHW charging priority.

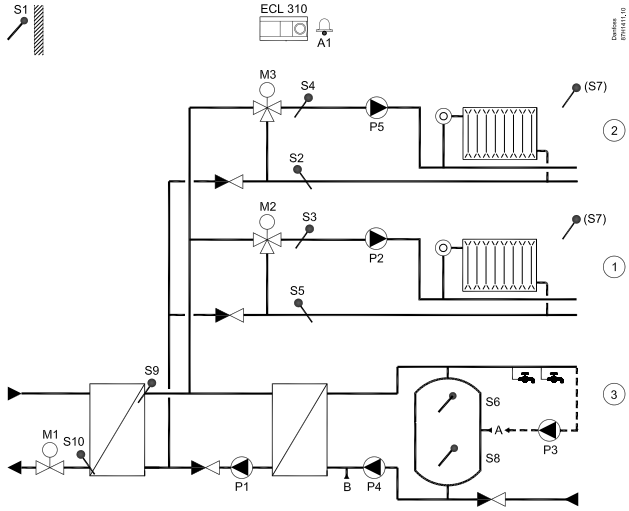

A390.13

Example b

Two indirectly connected heating circuits and one DHW heating circuit. Always DHW heating priority.

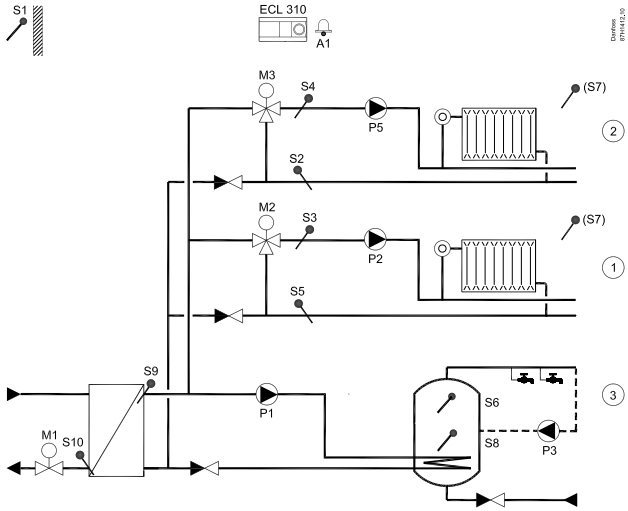

Example showing connections between ECL 210 / 296 / 310 via the ECL 485 bus.
Only one outdoor temperature sensor is needed and is connected to the master.
Via the ECL 485 bus the master broadcasts to other ECL 210 / 296 / 310 (slaves):
- Outdoor temperature signal
- Time and date
- DHW heating activity

Master/slave system 1

In this example the master is an A266 application. The slaves are applications A237 and A260.

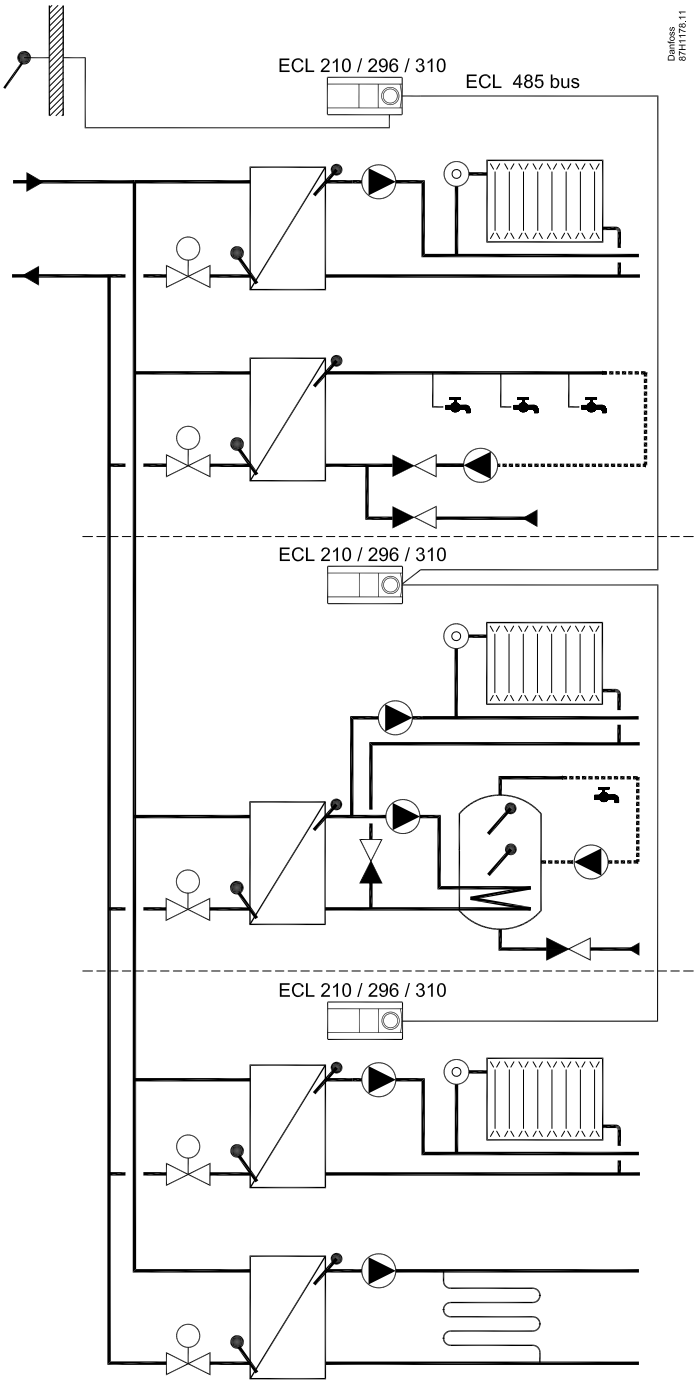

Example showing ECL 210 / 296 / 310 as master, controlling the main heat supply. Outdoor temperature signal, time, date and DHW heating activity signals are broadcasted to the slaves (other ECL 210 / 296 / 310). Slaves having an address can for each circuit send its desired flow temperature to the master. The master ensures that the highest demand from the slaves is fullfilled. Each circuit in the slaves can be set to close when DHW heating activity is present in the master in order to prioritize the DHW heating.

Master/slave system 2

In this example the master is an A230 application. The slaves are applications A260 and twice A247.

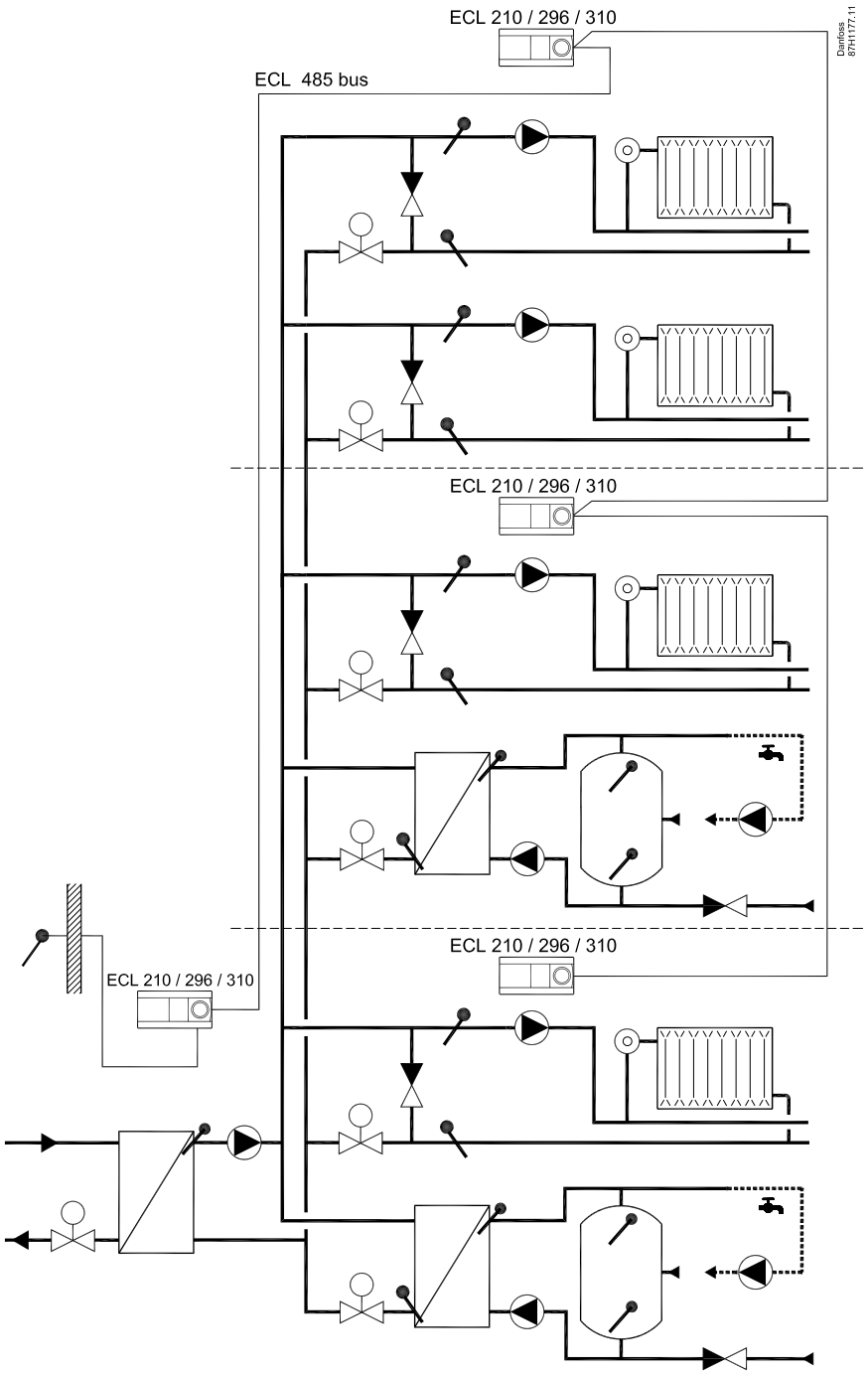

ECL Comfort Code numbers

ECL Comfort controllers

Type	Designation	Code no.
ECL Comfort 120	Universal hardware – 230 V a.c. (base part is included)	100B1200
ECL Comfort 210	Universal hardware – 230 V a.c. (base part is not included).	087H3020
ECL Comfort 210B	Universal hardware – 230 V a.c. (base part is not included). Without display and dial. Requires a remote control unit, ECA 30 or ECA 31.	087H3030
ECL Comfort 296	Universal hardware – 230 V a.c. (base part is not included). Dimension (L x H): 144 x 96 mm	087H3000
ECL Comfort 310	Universal hardware – 230 V a.c. (base part is not included).	087H3040
ECL Comfort 310	Universal hardware – 24 V a.c. (base part is not included).	087H3044
ECL Comfort 310B	Universal hardware – 230 V a.c. (base part is not included). Without display and dial. Requires a remote control unit, ECA 30 or ECA 31.	087H3050

ECL Comfort accessories

Type	Designation	Code no.
ECL Comfort 120 panel kit	For mounting in a panel cut-out (138*92)	100B1400
ECL Comfort 210/210 B base part	For mounting on wall or DIN rail (35 mm “top hat” type).	087H3220
ECL Comfort 296 base part	For mounting on wall or DIN rail (35 mm “top hat” type).	087H3240
ECL Comfort 296 panel kit	For mounting in a panel cut-out (138 x 92 mm). Contains 2 x terminal blocks and clamps.	087H3242
ECL Comfort 310/310 B base part	For mounting on wall or DIN rail (35 mm “top hat” type). Has space for the extension module ECA 32 or ECA 35. ECL Comfort 210 can be mounted in an ECL Comfort 310 base part (for future upgrade).	087H3230
ECA 30	Remote control unit for ECL 210 / 210 B / 296 / 310 / 310 B with integrated room temp. sensor. Possibility for connecting an external room temp. sensor (base part for mounting on wall included).	087H3200
ECA 31	Remote control unit for ECL 210 / 210 B / 296 / 310 / 310 B w. integrated room temp. sensor and relative humidity sensor. Possibility for connecting an external room temp. sensor. Base part included.	087H3201
ECA 30/31 frame kit for mounting in panel front	For mounting in a cut-out. Format 144 x 96 mm, actual cut-out 138 x 92 mm.	087H3236
ECA 32	Internal I/O extension module for ECL Comfort 310. Analog outputs. To be inserted in the ECL 310 base part.	087H3202
ECA 35	Internal I/O extension module for ECL Comfort 310. Analog and PWM outputs. To be inserted in the ECL 310 base part.	087H3205
ECA 99	230 V a.c. to 24 V a.c. transformer (35 VA).	087B1156

Safety thermostats

Type	Designation	Code no.
ST-1	Thermostat (TR) and safety monitor (STW) with automatic reset	087N1050
ST-2	Thermostat (TR) and safety limit (STB) with manual reset	087N1051
Sensor pocket	For ST-1 and ST-2	087N1201

Temperature sensors for ECL Comfort controllers

Type	Designation	Code no.
ESMT	Outdoor temperature sensor	084N1012
ESM-10	Room temperature sensor	087B1164
ESM-11	Pipe surface temperature sensor	087B1165
ESMB-12	Universal temperature sensor with 2.5 m cable	087B1184
ESMC	Pipe surface temperature sensor	087N0011
ESMU-100	Immersion sensor, 100 mm, copper	087B1180
ESMU-250	Immersion sensor, 250 mm, copper	087B1181
ESMU-100	Immersion sensor, 100 mm, stainless steel	087B1182
ESMU-250	Immersion sensor, 250 mm, stainless steel	087B1183
Pocket 100 mm	stainless steel, for ESMU-100, copper	087B1190
Pocket 250 mm	stainless steel, for ESMU-250, copper	087B1191
Pocket 100 mm	stainless steel, for ESMB-12	087B1192
Pocket 250 mm	stainless steel, for ESMB-12	087B1193

Differential pressure switch and Alarm pressure switches

Type	Differential pressure range	Electrical contact type	Code no.
Differential pressure switch, Danfoss type **RT 262A**	0,1 - 1,5 bar	SPDT - silver SPDT - gold available on request	017D002566 (silver)
Alarm pressure switch **BCP**	-	SPDT - gold	*
Alarm pressure switch **KPI 35**	0,2 - 8 bar	SPDT - silver/gold	060-121766 (silver) 060-504766 (gold)

* depending on application (control, high limiter, low limiter) and pressure range

Comparison

	ECL 120 + ECL Go App	ECL 210	ECL 296	ECL 310
Flow / energy limitation		X	X	X
M-bus			X	X
TCP / IP (Internet)	X		X	X
24 Volt a.c.				X
Inputs, temp. sensor (Pt 1000)	max. 4	max. 8	max. 8	max. 10
Inputs, 0 - 10 V		max. 2	max. 2	max. 4
Inputs, digital	1	max. 2	max. 2	max. 4
Inputs, ECA 32				max. 6 (Pt 1000 / digital / 0 - 10 V)
Inputs, ECA 35				max. 2 (Pt 1000 / digital / 0 - 10 V)
Pulse inputs	PWM			2 (ECA 35)
Outputs, 0 - 10 V				3 (ECA 32 / 35)
Outputs, PWM	1			4 (ECA 35)
Relay outputs, max.	1	4	4	6
Relay outputs, ECA 32 / 35				4 (2 x CO and 2 x NC)
Bluetooth connectivity	X			
Dimensions, front (L x H mm)	144 x 96	220 x 110	144 x 96	220 x 110
Optional panel mounting	yes	no	yes	no

ECL Comfort application keys and languages

ECL Comfort 210 + 296 + 310 Application keys

Application type	Code no.
A214 also covering A314	087H3811
A217 also covering A317	087H3807
A230	087H3802
A231 also covering A331	087H3805
A232 also covering A332	087H3812
A237 also covering A337	087H3806
A247 also covering A347	087H3808
A260	087H3801
A266	087H3800
A275 also covering A375	087H3814
A319	087H3847
A333	087H3818
A361	087H3804
A362	087H3845
A367	087H3813
A368	087H3803
A376	087H3810
A377	087H3817
A390	087H3815

Application keys Available languages

Languages	
Bulgarian	Italian
Croatian	Latvian
Czech	Lithuanian
Danish	Polish
Dutch	Romanian
English	Russia
Estonian	Serbian
Finnish	Slovak
French	Slovenian
German	Spanish
Hungarian	Swedish

High performance made easy

The ECL Comfort controller is designed to function as the intelligent hub of a heating system or a district heating substation. The ECL Comfort controller is designed and developed with your needs in mind and incorporates a range of features that enable you to achieve high performance.

Clever communication

The ECL Comfort 296 and 310 offer state-of-the-art options for communication interfaces, such as Modbus, M-Bus and USB for service purposes. The application range of the ECL Comfort 310 can be extended with the module ECA 32.

Automatic setup of DHW parameters

With advanced ECL Auto Tuning, control parameters for domestic hot water production can be configured and optimised automatically, ensuring both higher comfort and additional energy savings.

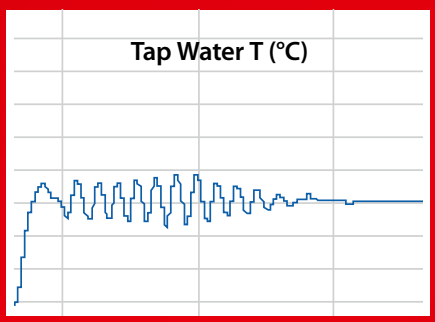

Faster installation

Improved cable connectors and more space for wiring ensure fast and trouble free installation of the ECL Comfort controller in the system.

Longer lifetime

The ECL Comfort controllers feature a unique motor protection function, which prevents instability in the system, thus protecting acutators and control valves against unnecessary activity. This results in up to 25% longer lifetime of these components.

Easy interaction

The ECL Comfort controller has a large display with graphic text and a backlight. Supported by intuitive menu navigation, turn/push dial and the set-up wizard, this makes the interaction straightforward.

ENGINEERING
TOMORROW

Easy, Effective, ECL

Access your ECL controllers via PC or smartphone

The Leanheat® Monitor application for the electronic controllers ECL Comfort 120, 296 and 310 is an easy-to-use supervision tool for control of your district heating system. Leanheat® Monitor enables you to streamline service, commissioning and maintenance – directly from your PC or smartphone, wherever you are.

Increase your service levels and reduce costs with 24/7 access and control and get a complete overview of energy consumption data, temperatures and flow. The result is optimum performance and actual energy savings.

Real benefits, real savings

Leanheat® Monitor allows you to:

- Increase long-term system performance
- Gain a higher level of awareness and transparency of the energy consumption
- Improve service level and reduce response time to alarms
- Do troubleshooting without having to visit the heating system

Feel free to contact us or visit Leanheat® Monitor website page for further information.

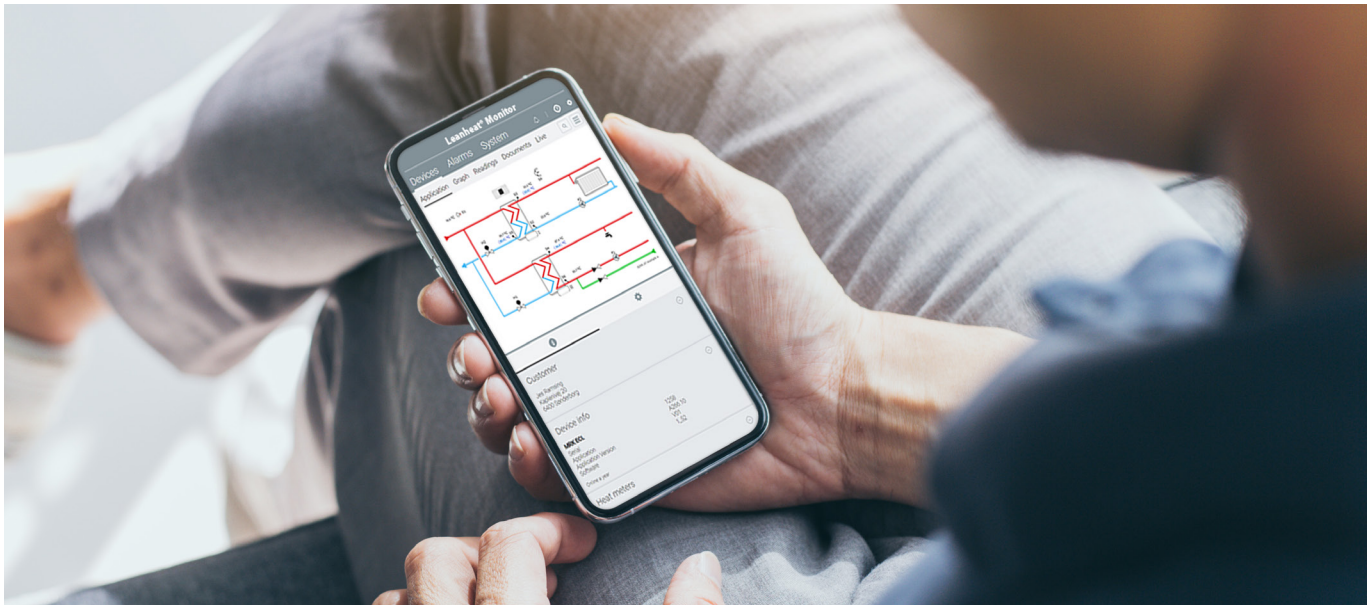

Danfoss A/S
Climate Solutions • danfoss.com • +45 7488 2222

Any information, including, but not limited to information on selection of product, its application or use, product design, weight, dimensions, capacity or any other technical data in product manuals, catalogues descriptions, advertisements, etc. and whether made available in writing, orally, electronically, online or via download, shall be considered informative, and is only binding if and to the extent, explicit reference is made in a quotation or order confirmation. Danfoss cannot accept any responsibility for possible errors in catalogues, brochures, videos and other material.
Danfoss reserves the right to alter its products without notice. This also applies to products ordered but not delivered provided that such alterations can be made without changes to form, fit or function of the product.
All trademarks in this material are property of Danfoss A/S or Danfoss group companies. Danfoss and the Danfoss logo are trademarks of Danfoss A/S. All rights reserved.

© Copyright Danfoss Climate Solutions | 2023.08