ENGINEERING
TOMORROW

Data Sheet

Solenoid valve
Type **EV221BW**

Direct servo operated for drinking water

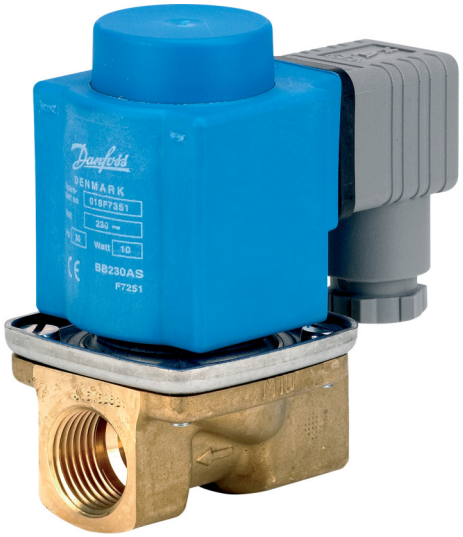

EV221BW 10, 14, 20 and 22 is a direct servo-operated 2/2-way solenoid valve. This valve type is designed with EPDM seal, lead free dezincification resistant Eco brass for drinking water applications.

- For water supply
- Houses and large apartments
- Kitchens and bathrooms
- Commercial buildings
- Industrial buildings
- Zoning
- Laundry
- Dishwashing
- Main intel valve
- Dosing machines
- Food processing

Features

- For drinking water
- Clip on coil
- Coil enclosure: Up to IP67
- Water hammer damped
- Body material in Eco Brass (lead free <0,1%) and dizincification resistant
- New generation EPDM sealings recommended for drinking water.

1 Portfolio overview

Table 1: Portfolio overview

Features	EV221BW	EV221BW
Body material	Eco brass	Eco brass
DN [mm]	10 - 22	10 - 22
Connection	G3/8" - G1"	G3/8″ - G1″
Sealing material	EPDM	EPDM
Function	NC	NO
K_v [m³/h]	1.5 - 6.0	1.5 - 6.0
Differential pressure range [bar]	0.1 - 10	0.1 - 10
Temperature range [°C]	-30 - 90	-30 - 90

2 Functions

2.1 Functions NC

Coil voltage disconnected (closed)
When the supply voltage to the coil (8) is disconnected, the valve plate (3) is pressed down against the pilot orifice (6) by the armature spring (1). The pressure across the diaphragm (7) is built up via the equalizing orifice (4). The diaphragm closes the main orifice (5) as soon as the pressure across the diaphragm is equivalent to the inlet pressure. The valve will be closed for as long as the voltage to the coil is disconnected.

Coil voltage connected (open)
When voltage is applied to the coil, the pilot orifice (6) is opened. As the pilot orifice is larger than the equalizing orifice (4), the pressure across the diaphragm (7) drops and therefore it is lifted clear of the main orifice (5). The valve is now open and will be open for as long as the minimum differential pressure across the valve is maintained, and for as long as there is voltage to the coil.

Figure 1: Function NC

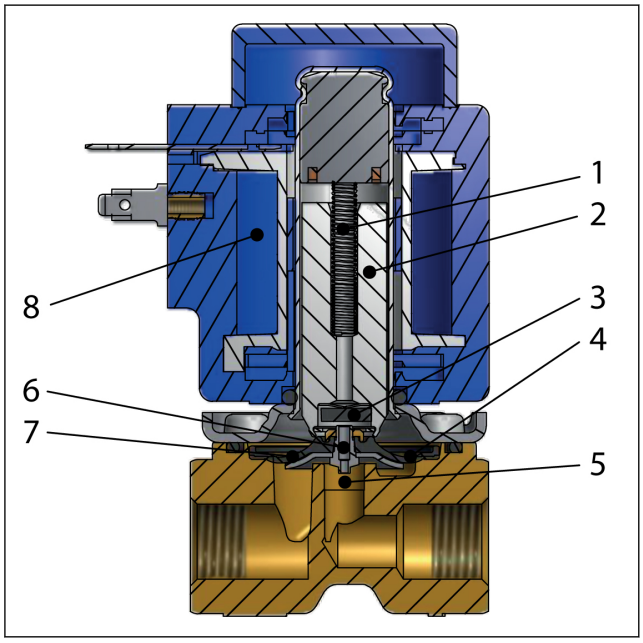

1	Armature spring
2	Armature
3	Valve plate
4	Equalizing orifice
5	Main orifice
6	Pilot orifice
7	Diaphragm
8	Coil

2.2 Function NO

Coil voltage disconnected (closed)
When the voltage to the coil (8) is disconnected, the pilot orifice (6) is open. As the pilot orifice is larger than the equalizing orifice (4), the pressure across the diaphragm (7) drops and therefore it is lifted clear of the main orifice (5). The valve will be open for as long as the minimum differential pressure across the valve is maintained, and for as long as the voltage to the coil is disconnected.

Coil voltage connected (open)
When voltage is applied to the coil, the valve plate (3) is pressed down against the pilot orifice (6). The pressure across the diaphragm (7) is built up via the equalizing orifice (4). The diaphragm closes the main orifice (5) as soon as the pressure across the diaphragm is equivalent to the inlet pressure. The valve will be closed for as long as there is voltage to the coil.

Figure 2: Function NO

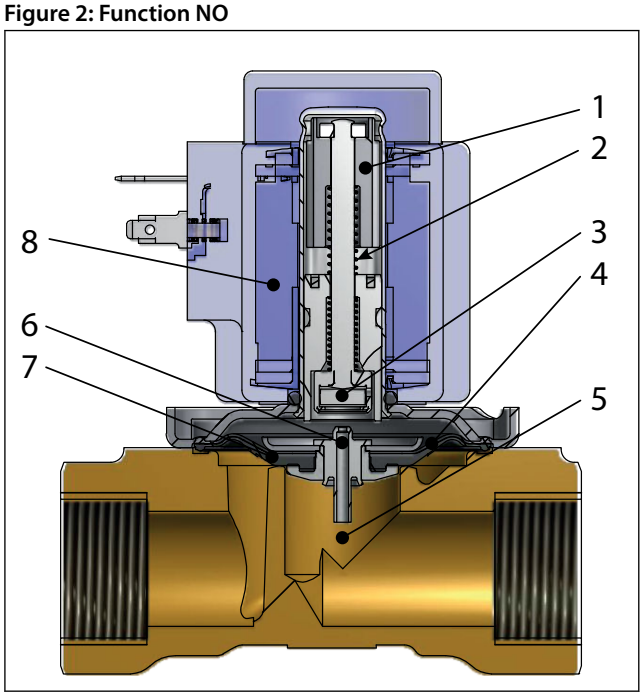

1	Armature
2	Opening spring
3	Valve plate
4	Equalizing orifice
5	Main orifice
6	Pilot orifice
7	Diaphragm
8	Coil

3 Applications

It is recommended to use a filter in front of the valve. Recommended filter 50 mesh (297 microns).

Figure 3: Filter

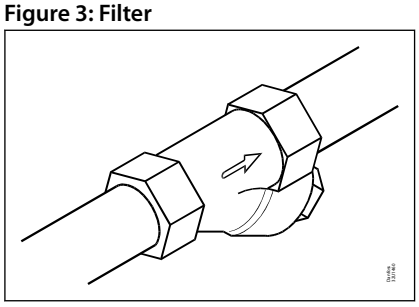

In water applications, exercise the valves at least once every 24 hours, meaning change the state of the valve. The valve exercise will minimize the risk of the valve sticking due to calcium carbonate, zinc or iron oxide build-up.

Figure 4: Exercise: Valve on/off

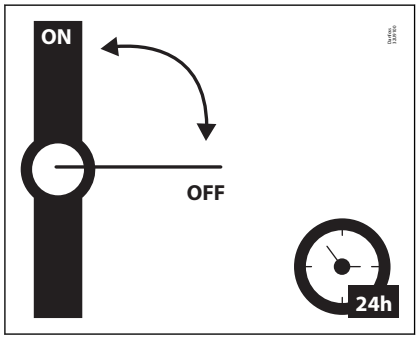

Guidelines for water

To minimize scaling, and corrosion attack it is recommended that the water passing the valve have the following values:

- Hardness 6-18 °dH to avoid scaling (chalk / lime stone build up).
- Conductivity 50 – 800 µS/cm to avoid brass dezincification and corrosion.
- Above 25°C media temperature avoid stagnant water inside the valve to avoid dezincification and corrosion attack.
- Drinking water (Ph 6-9)

4 Product specification

4.1 Technical data

Table 2: Technical data

Media	EPDM	Drinking water
Media temperature [°C]	EPDM	-30 - 90 °C
Ambient temperature [°C]	Up to 50 °C	
K_v value [m³/h]	DN10	1.5 m³/h
	DN14	2.5 m³/h
	DN20	6.0 m³/h
	DN22	6.0 m³/h
Min. Opening differential pressure [bar]	DN10	0.1 bar
	DN14-22	0.3 bar
Max. Opening differential pressure [bar]	10 bar	
Max. working pressure [bar]	10 bar	
Max. test pressure [bar]	15 bar	
Viscosity [cSt]	Max. 50 cSt	

Capacity diagram

Example, water: EV221BW 10NC at 4 bar diff. pressure. Approx: 3 m³/h

Figure 5: Capacity diagram

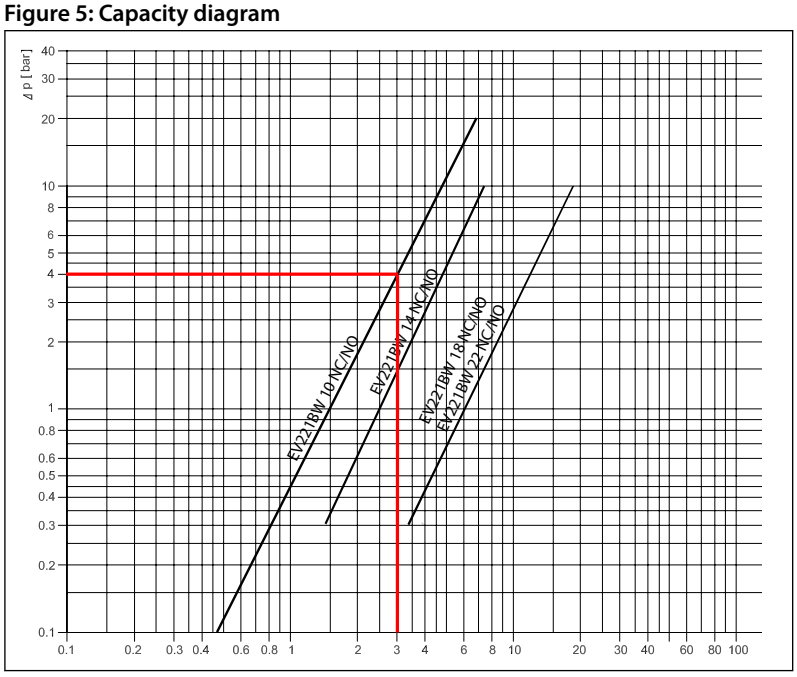

Time to open/close

Table 3: Time to open/close

Type	EV221BW 10	EV221BW 14	EV221BW 20	EV221BW 22
Time to open [ms][1]	50	60	200	200
Time to close [ms][1]	300	300	500	500

[1] The times are indicative and apply to water. the exact times will depend on the pressure conditions.

Materials

Table 4: Materials

Components	Materials	Specifications
Valve body	Eco brass	CW724R
Armature	Stainless steel	W.no. 1.4105 / AISI 430FR
Armature tube	Stainless steel	W.no. 1.4306 / AISI 304L
Armature stop	Stainless steel	W.no. 1.4105 / AISI 430FR
Springs	Stainless steel	W.no. 1.4310 / AISI 301
O-rings	EPDM	
Valve plate	EPDM	
Diaphragm	EPDM	

4.2 Dimension and weight

Table 5: Dimension and weight: Eco brass NC and NO

Type	Weight gross valve body without coil	L	B	B_1		H	H_1
	[kg]	[mm]	[mm]	BB / BE	BG	[mm]	[mm]
EV221BW 10	0.29	51.5	48.0	46	68	81	13
EV221BW 14	0.35	58.0	54.0	46	68	81	13
EV221BW 20	0.65	90.0	60.0	46	68	87	22
EV221BW 22	0.65	90.0	60.0	46	68	91	22

Figure 6: Dimension

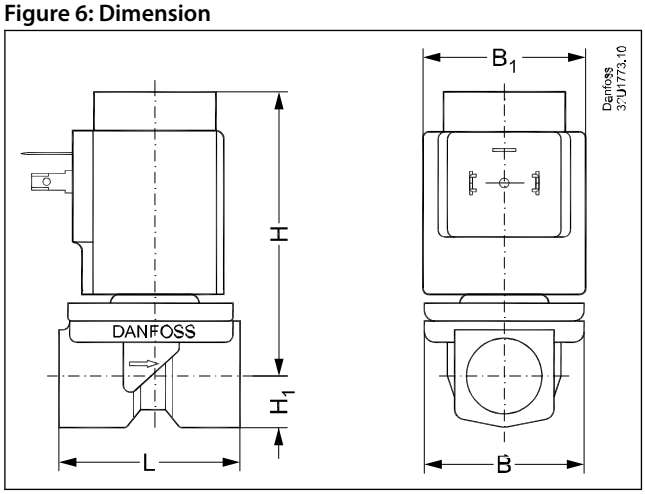

4.3 Mounting

Figure 7: Mounting angle

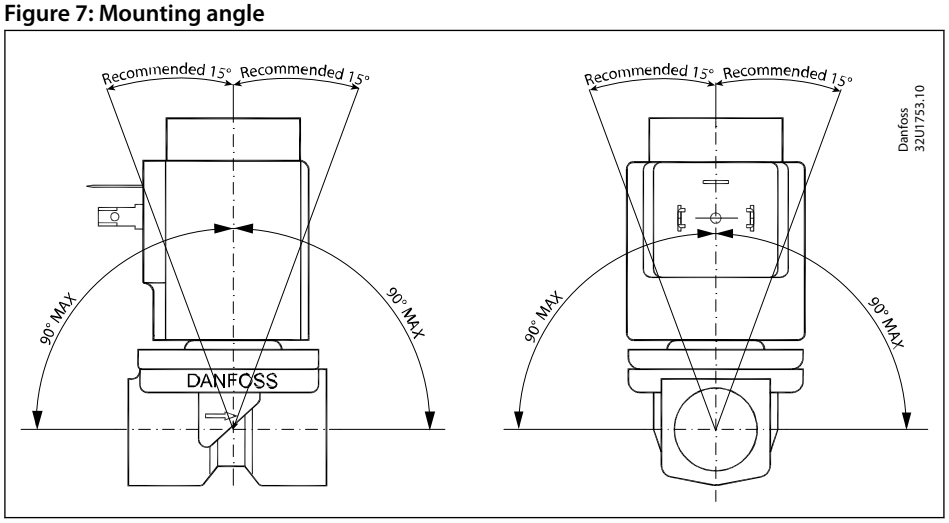

5 Ordering

Table 6: Eco brass, valve body NC and NO

ISO228/1 connection	Orifice	K_v value	Seal Material	Function	
				Eco brass	
	[mm]	[m³/h]	EPDM	NC	NO
G3/8	10	1.5	EPDM	132U1000	132U1001
G1/2	10	1.5	EPDM	132U1002	132U1003
	14	2.5	EPDM	132U1300	132U1301
G3/4	20	6.0	EPDM	132U2002	132U2003
G1	22	6.0	EPDM	132U2200	132U2201

5.1 Accessories

Coils

Figure 8: BB, clip on

Table 7: BB, clip on

Type	Tambient	Supply voltage	Voltage variation	Frequency	Control	Power consumption		Code no.
	[°C]	[V]	[Hz]			[W]	[VA]	
BB024AS	-40 - 80	24	-15%, +10%	50	NC/NO	11	19	018F7358
BB230AS	-40 - 80	220 - 230	-15%, +10%	50	NC/NO	11	19	018F7351
BB012DS	-40 - 50	12	±10%	DC	NC/NO	13		018F7396
BB024DS	-40 - 50	24	±10%	DC	NC/NO	16		018F7397

EEC controller and coil unit

Figure 9: EEC Electronic coil controller

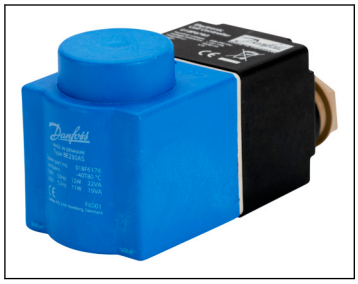

Table 8: EEC Electronic coil controller

Type	Tambient	Supply voltage	Voltage variation	Frequency	Control	Power consumption	Code no.
	[°C]	[V]		[Hz]		[W]	
BE240CS	-25 – 55	208 - 240	±10%	60	NC, NO	4	018F6783
		208 - 240	±10%	50	NC, NO	4	

Cable plug

Figure 10: Cable plug

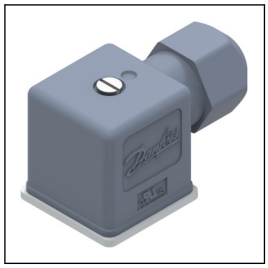

Table 9: Cable plug

Cable plug size	Description	Code no.
DN 18	Cable plug IP67	042N1256

Spare part kits

Table 10: Spare part kits DN10 - DN22

Type	Actuator kit NC	Actuator kit NO	Actuator kit NC	Actuator kit NO
	Sealing			
	EPDM			
EV221BW DN 10	132U8010	132U8011		
EV221BW DN 14			132U8014	132U8013
EV221BW DN 20			132U8022	132U8023
EV221BW DN 22			132U8022	132U8023
	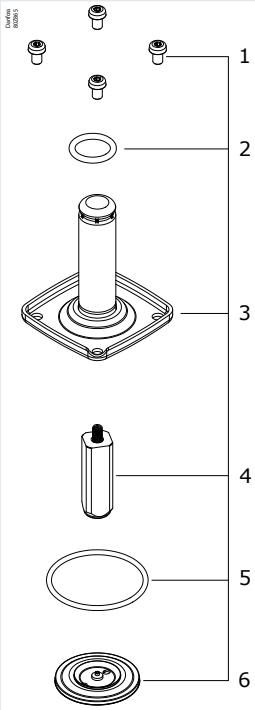	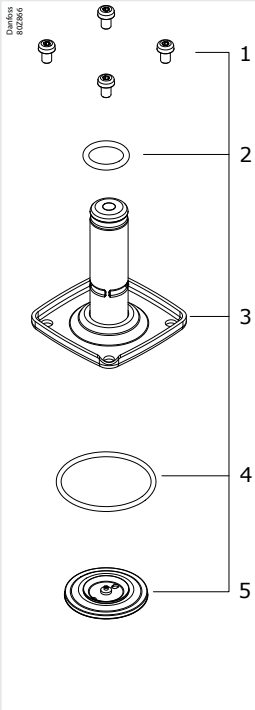	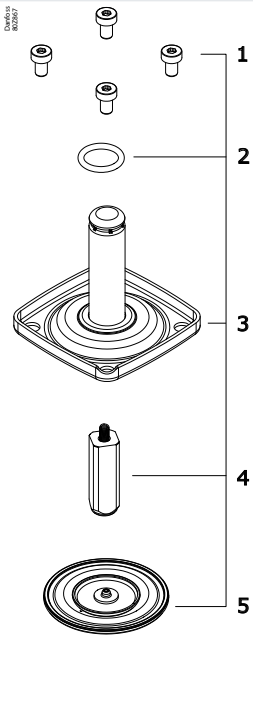	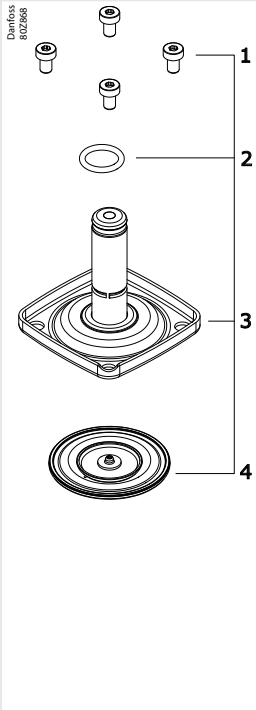
	1. 4 x Screws 2. O-ring 3. Armature tube 4. Armature + spring 5. O-ring 6. Diaphragm	1. 4 x Screws 2. O-ring 3. NO unit 4. O-ring 5. Diaphragm	1. 4 x Screws 2. O-ring 3. Armature tube 4. Armature + spring 5. Diaphragm	1. 4 x Screws 2. O-ring 3. NO unit 4. Diaphragm

Table 11: Filters for G1/2 and G3/4 (NC+NO)

Type	G1/2	G3/4
EV221BW DN 12 G1/2	132U8015	
EV221BW DN 18 G3/4		132U8020
	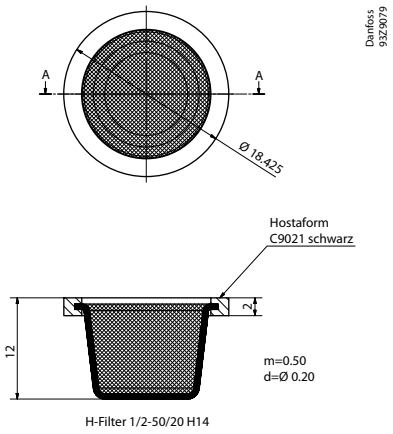	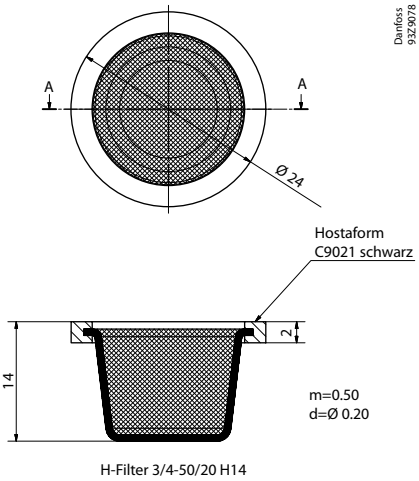

6 Certificates, declarations and approvals

6.1 Directives, approvals and certificates

In accordance with
- Low Voltage Directive 2014/35/EU
  - EN60730-1: 2011
  - EN60730-2-8: 2002
- Pressure Equipment Directive 2014/68/E
- RoHS Directive 2011/65/EU
  - Including amendment 2015/863/EU

6.2 Drinking water approvals

Figure 11: Rise

Valves are certified by RISE, notified body 1002. Valid in Denmark and Sweden. In accordance with Boverket Building Regulations (BBR 21, 2014-06-17) Certificate number SCO155-18

Figure 12: SINTEF

Valves are certified by SINTEF. Valid in Norway. In accordance with NKB Product rules nr. 13, pkt. 3.2 – 3.6 :

- NT VVS 100, pkt. 6.4.2 & 6.4.8
- EN ISO 6509

Figure 13: DTI

Inspection by DTI

Figure 14: ACS

Valves are certified by Carso according to ACS guidelines, Circulaire 2002/571.

Figure 15: PZH

Hygenic certificate B-BK-60210-1275/19. Issued by Polish National Institute of Public health (PZH).

Wetted materials in accordance with 4MS (4 member states Germany, Holland, France and UK), DVGW, BWGL, KTW and W270.

Figure 16: WRAS

Valves are examined, tested and found, when correctly installed, to comply with the requirements of the United Kingdom Water Supply (Water Fittings) Regulations and Scottish Water Byelaws."

7 Online support

Danfoss offers a wide range of support along with our products, including digital product information, software, mobile apps, and expert guidance. See the possibilities below.

The Danfoss Product Store

The Danfoss Product Store is your one-stop shop for everything product related—no matter where you are in the world or what area of the cooling industry you work in. Get quick access to essential information like product specs, code numbers, technical documentation, certifications, accessories, and more.
Start browsing at store.danfoss.com.

Find technical documentation

Find the technical documentation you need to get your project up and running. Get direct access to our official collection of data sheets, certificates and declarations, manuals and guides, 3D models and drawings, case stories, brochures, and much more.

Start searching now at www.danfoss.com/en/service-and-support/documentation.

Danfoss Learning

Danfoss Learning is a free online learning platform. It features courses and materials specifically designed to help engineers, installers, service technicians, and wholesalers better understand the products, applications, industry topics, and trends that will help you do your job better.

Create your Danfoss Learning account for free at www.danfoss.com/en/service-and-support/learning.

Get local information and support

Local Danfoss websites are the main sources for help and information about our company and products. Find product availability, get the latest regional news, or connect with a nearby expert—all in your own language.

Find your local Danfoss website here: www.danfoss.com/en/choose-region.

Spare Parts

Get access to the Danfoss spare parts and service kit catalog right from your smartphone. The app contains a wide range of components for air conditioning and refrigeration applications, such as valves, strainers, pressure switches, and sensors.

Download the Spare Parts app for free at www.danfoss.com/en/service-and-support/downloads.

Danfoss A/S
Climate Solutions • danfoss.com • +45 7488 2222

Any information, including, but not limited to information on selection of product, its application or use, product design, weight, dimensions, capacity or any other technical data in product manuals, catalogues descriptions, advertisements, etc. and whether made available in writing, orally, electronically, online or via download, shall be considered informative, and is only binding if and to the extent, explicit reference is made in a quotation or order confirmation. Danfoss cannot accept any responsibility for possible errors in catalogues, brochures, videos and other material.
Danfoss reserves the right to alter its products without notice. This also applies to products ordered but not delivered provided that such alterations can be made without changes to form, fit or function of the product.
All trademarks in this material are property of Danfoss A/S or Danfoss group companies. Danfoss and the Danfoss logo are trademarks of Danfoss A/S. All rights reserved.