MAKING MODERN LIVING POSSIBLE

Parts Manual

Open Circuit Pumps
Series 45 Frame L 25 and 30cc

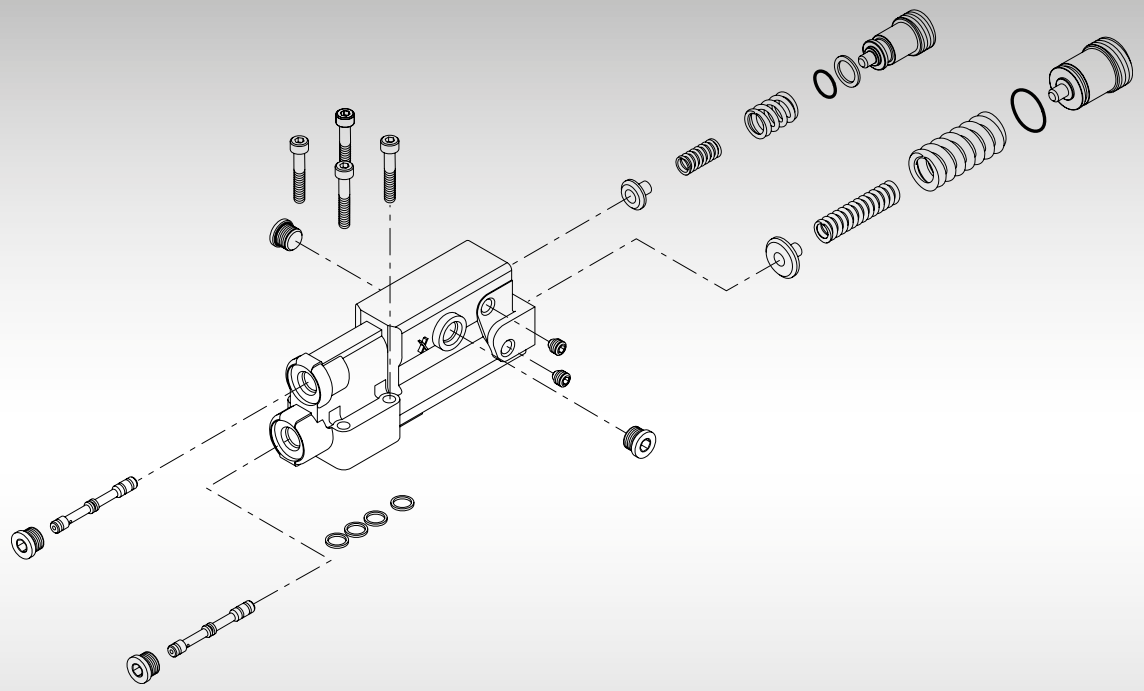

powersolutions.danfoss.com

Contents

General Information
Service parts identification 4
Nameplate 4
Date code 5
Service bulletins 5
Procedure to identify a part 5
Order code 7

Control
Load sensing 8-11
Pressure compensating 12-13
Remote pressure compensating 12-13
De-stroking valve 14-15
Dump valve 14-15
Electric proportional 16-19
Electric on/off 20-21

Orifice
Choke orifice 22-23
Gain orifice 23

Input shaft
Shaft 24-65

End cap
End cap 24-65

Auxiliary mounting
Auxiliary mounting flange 24-65

Housing/shaft seal
Housing/shaft seal 66-67

Displacement limiter
Displacement limiter 68-69

Special hardware
Special hardware 70-71

Displacement
Displacement 70-71

Seal kit
Overhaul seal kit 72

Contents

Service bulletins

SB-2001-004 (control housing) ... 73
SB-2001-020 (case check valve and spring) ... 74
SB-2001-023 (low noise end cap and valve plate) ... 75
SB-2002-006 (load sense adjusting plug) ... 76
SB-2002-020 (pressure compensating adjusting plug) ... 77
SB-2002-031 (load sense spring seat) ... 78
SB-2002-033 (valve plate) ... 79
SB-2002-034 (spring guide) ... 80
SB-2002-042 (end cap/displacement limiter) ... 81
SB-2003-005 (servo piston seal) ... 82
SB-2003-015 (swashplate and servo piston) ... 83
SB-2008-003 (load sense plug assembly) ... 84
SB-2008-029 (load sense spring seat in electric controls) ... 85
SB-2008-064 (end cap) ... 86-87
SB-2009-029 (load sense spool) ... 88
SB-2009-034 (load sense springs) ... 89
SB-2009-069 (displacement limiter) ... 90
SB-2010-046 (swashplate) ... 91
SB-2011-030 (housing) ... 92
SB-2012-001 (overhaul seal kit) ... 93
SB-2012-012 (choke orifice) ... 94-95
SB-2013-034 (displacement limiter screw) ... 96

General information

Service parts indentification

The following information and procedure is used to identify the module group, item number, manufacture date, part number, and part name of the parts included in the Frame L open circuit pump. The Frame L includes the 25 and 30 cc displacement pumps.

The parts listed include all parts which may be used when performing either "Minor Repairs", "Major Repairs" or "Conversions" Frame L open circuit pumps.

Nameplate

Each unit will have a nameplate affixed to the housing. The nameplate will include the following information.

Model Number
The Sauer-Danfoss model number is used by the factory in manufacturing. On repeat orders, a complete unit can be ordered by the model number.

Model Code
The Sauer-Danfoss model code completely defines the specific unit and must be used when ordering parts to service this product.

Serial Number
The Sauer-Danfoss serial number is used to identify the manufacture date and the unit sequence in the build. The serial number is also used to identify the units warranty time period.

The letter code indicates the location of original manufacture (assembly). "S" indicates the unit was originally assembled in Slovokia.

The first 2 digits indicates the year of manufacture. ("02" would indicate the unit was manufactured in 2002)

The second 2 digits indicates the calendar week of manufacture.

The last 5 digits are a sequential number used to identify a specific unit.

General information

Date code

The date code is defined as the year and week of manufacture. The same item number may list more than one part number. This indicates that there is more than one configuration for that item number. You will see that there are different date codes for the different part numbers. Find the date code of your unit from the nameplate to determine which service part number you need to order.

EXAMPLE: The service part desired is Item C138A

Order Code	Item	Date Begin	Date End	Part Number	Part Name	Qty. per Model/Kit
LS	C138A	02-19		5000656	O-ring	1
	C138A	01-10	02-18	633354 (9004104-0180)	O-ring (SB-2002-020)	1

All units using this order code with a date code of 94-34 and up to and including 98-01 must use part number "4570025".

All units with a date code of 98-02 and newer must use part number "4570245".

Service bulletins

A Service Bulletin Number (SB-_ _ _ _ - _ _ _) may follow the "Part Name" of the part you desire. You must read that Service Bulletin prior to ordering that part. The information contained in these Service Bulletins, as of the print date of this bulletin, are included at the end of this manual. Service Bulletins contain more detailed information such as interchangeability, what additional parts are involved, etc. It is suggested that you add additional Service Bulletins to this manual as you recieve them.

Procedure to identify a part

General
The modular design of Series 45 units results in a simplified service parts list and part number identification procedure.

The same item numbers are used for same part names on all units within a product type. (Example: The lip seal - Item K020 has the same item number on all pumps.)

A part number that has another number following it in parentheses is done to make this a world wide manual. The first number is sold in Europe. The number in parentheses is sold in the United States. (Example: 633354 (9004104-0180), customers would order 9004104-0180 if ordering the part in the United States.)

Example of a Part Identification
The nameplate on a Series 45 pump has an Order Code of LRL 025C PC 10 NN NN N 3 C2BG A6N PLB NNN NNN. Do this to determine the part number of the drive shaft used on this pump.

1) Referring to the input shaft module in the Order Code (see page 7), the input shaft option for this pump is identified by the code **C2BG** (LRL 025C PC 10 NN NN N 3 **C2BG** A6N PLB NNN NNN)
2) Referring to the Service Parts List, find the shaft group.
3) Find the order code that relates to this unit, which is **C2BG**.
4) The shaft is item J010
5) The part number 1700177.

Notes

Order code

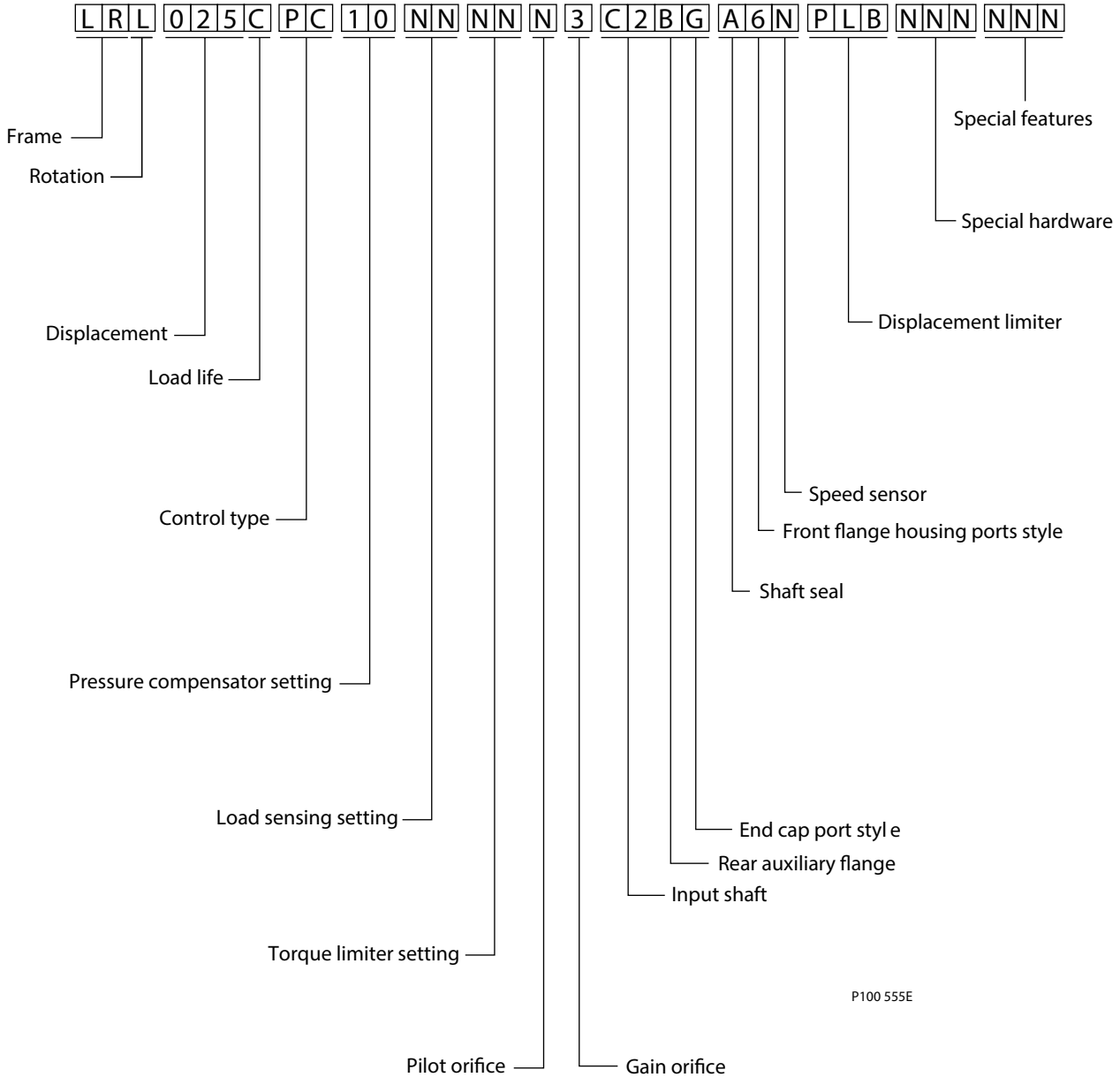
L R L 0 2 5 C P C 1 0 N N N N N 3 C 2 B G A 6 N P L B N N N N N N
Frame
Rotation
Displacement
Load life
Control type
Pressure compensator setting
Load sensing setting
Torque limiter setting
Pilot orifice
Gain orifice
Input shaft
Rear auxiliary flange
End cap port styl e
Shaft seal
Front flange housing ports style
Speed sensor
Displacement limiter
Special hardware
Special features
P100 555E

Control

(AB, AJ & AS)

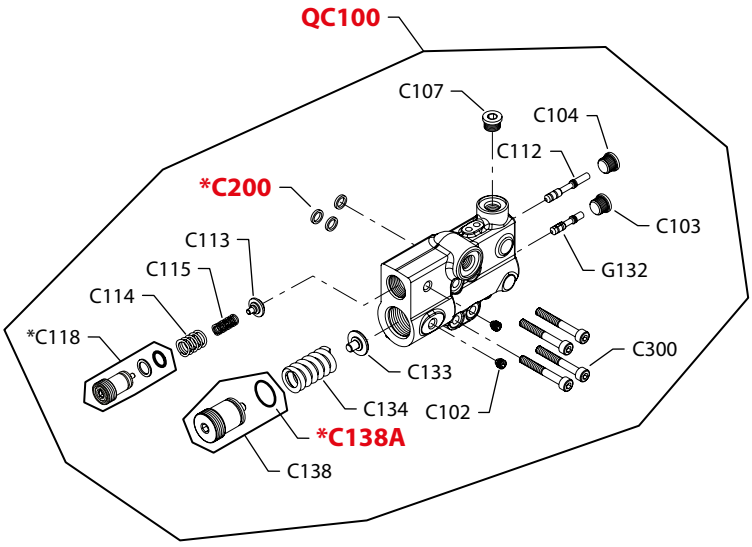

(LB)

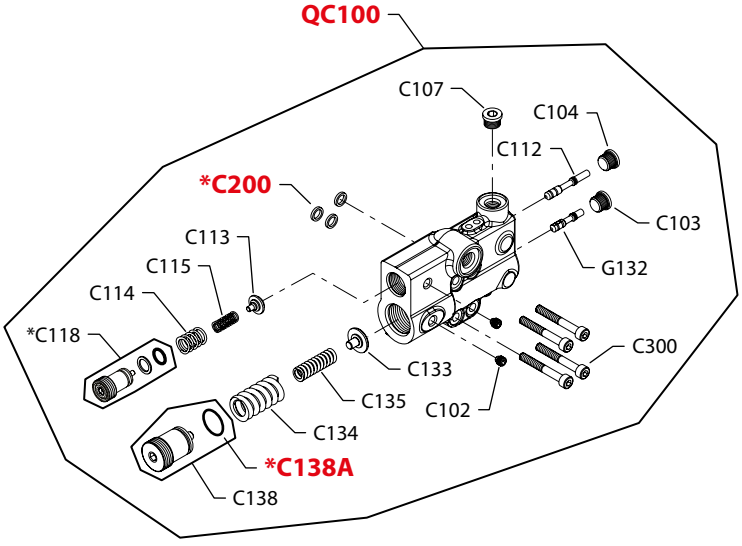

E100 466E

* = included in base motor seal kit Q210

Enlarged **bold** type item numbers are recommended part to stock for servicing.

Control

Common load sensing control parts

Order code	Item	Date begin	Date end	Part number	Part name	Qty. per model/kit
	C102	00-50		4740064	Set screw	2
	C103	00-50		327007 (9005110-4400)	Plug assembly	1
	C104	00-50		327007 (9005110-4400)	Plug assembly	1
	C107	00-50		327007 (9005110-4400)	Plug assembly	1
	C113	00-50		4740246	Spring guide (SB-2002-031)	1
	C114	00-50		11044986	Spring, LS, outer (SB-2009-034)	1
	C115	00-50		11044985	Spring, LS, inner (SB-2009-034)	1
	C118	00-50		11062214	Adjusting plug (SB-2008-003)	1
	C133	00-50		4740247	Spring guide (SB-2002-034)	1
	C138A	02-19		5000656	O-ring	1
	C138A	00-50	02-18	633354 (9004104-0180)	O-ring (SB-2002-020)	1
	C200	00-50		4740154	Seal ring	3
	C300	00-50		692889 (9007314-0611)	Screw	4

Load sensing Control

AB	C112	02-20		1700358	Spool, LS	1
	C134	02-20		1700498	Spring, PC, light	1
	C138	02-20		1700597	Adjusting plug assembly	1
	G132	02-20		1700217	Spool, PC	1
	QC100	02-20		11115333	Control kit, low pressure (SB-2012-012)	1
AJ	C112	02-20		1700216	Spool, LS	1
	C134	02-20		1700498	Spring, PC, light	1
	C138	02-20		1700597	Adjusting plug assembly	1
	G132	02-20		1700217	Spool, PC	1
	QC100	02-20		11115375	Control kit, low pressure (SB-2012-012)	1
AS	C112	02-20		1700216	Spool, LS	1
	C134	02-20		1700498	Spring, PC, light	1
	C138	02-20		1700597	Adjusting plug assembly	1
	G132	02-20		1700217	Spool, PC	1
	QC100	02-20		11115331	Control kit, low pressure (SB-2012-012)	1
LB	C112	01-08		1700358	Spool, LS	1
	C134	01-08		1700130	Spring, PC, inner	1
	C135	01-08		1700129	Spring, PC outer	1
	C138	01-08		11062379	Adjusting plug assembly (SB-2002-020)	1
	G132	01-08		1700217	Spool, PC	1
	QC100	02-20		11115257	Control kit, (SB-2012-012)	1

Control

(LJ, LS, LT & LV)

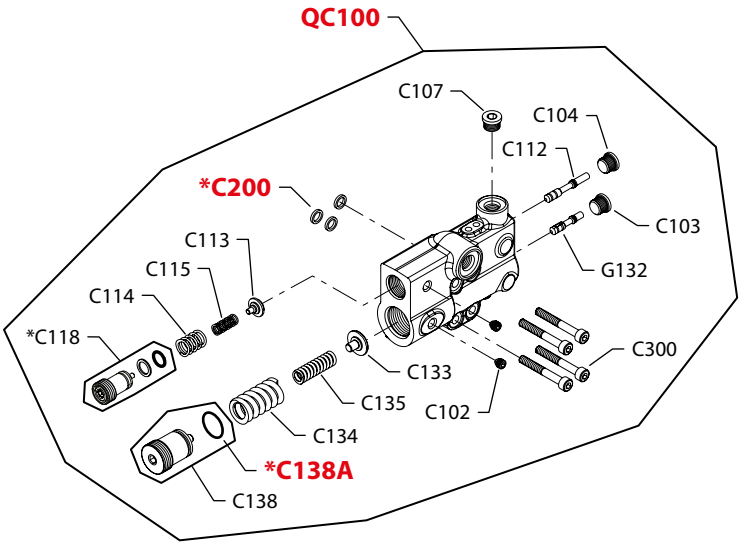

E100 536E

* = included in base motor seal kit Q210

Enlarged **bold** type item numbers are recommended part to stock for servicing.

Control

Common load sensing control parts

Order code	Item	Date begin	Date end	Part number	Part name	Qty. per model/kit
	C102	00-50		4740064	Set screw	2
	C103	00-50		327007 (9005110-4400)	Plug assembly	1
	C104	00-50		327007 (9005110-4400)	Plug assembly	1
	C107	00-50		327007 (9005110-4400)	Plug assembly	1
	C113	00-50		4740246	Spring guide (SB-2002-031)	1
	C114	00-50		11044986	Spring, outer	1
	C115	00-50		11044985	Spring, inner	1
	C118	00-50		11062214	Adjusting plug (SB-2008-003)	1
	C133	00-50		4740247	Spring guide (SB-2002-034)	1
	C134	00-50		1700130	Spring, PC outer	1
	C135	00-50		1700129	Spring, PC, inner	1
	C138A	02-19		5000656	O-ring	1
	C138A	00-50	02-18	633354 (9004104-0180)	O-ring (SB-2002-020)	1
	C200	00-50		4740154	Seal ring	3
	C300	00-50		692889 (9007314-0611)	Screw	4

Load sensing Control

LJ	C112	00-50		1700216	Spool, LS	1
	C138	00-50		11062379	Adjusting plug assembly (SB-2002-020)	1
	G132	00-50		1700217	Spool, PC	1
	QC100	00-50		11115337	Control kit (SB-2001-004 & SB-2012-012)	1
LS	C112	01-05		1700216	Spool, LS	1
	C138	01-05		11062379	Adjusting plug assembly (SB-2002-020)	1
	G132	01-05		1700217	Spool, PC	1
	QC100	01-05		11115255	Control kit (SB-2001-004 & SB-2012-012)	1
LT	C112	10-23		110802101	Spool, LS, special	1
	C138	10-23		11062379	Adjusting plug assembly	1
	G132	10-23		11105009	Spool, PC	1
	QC100	10-23		11115336	Control kit, special (SB-2012-012)	1
LV	C112	11-32		110802101	Spool, LS, special	1
	C138	11-32		11062379	Adjusting plug assembly	1
	G132	11-32		1700217	Spool, PC	1
	QC100	11-32		11136393	Control kit, special (SB-2012-012)	1

Control

(AC)

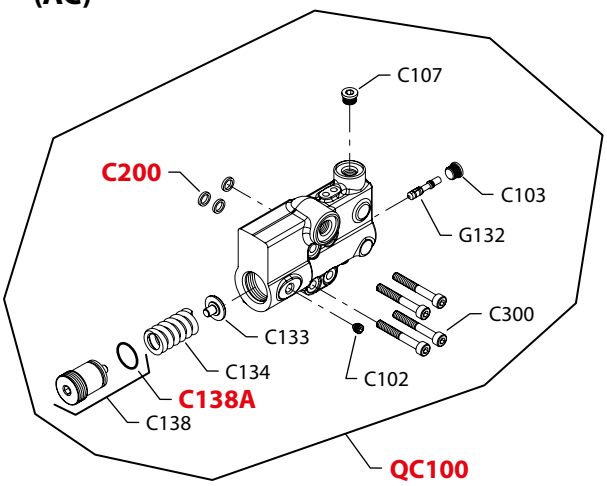

(PC)

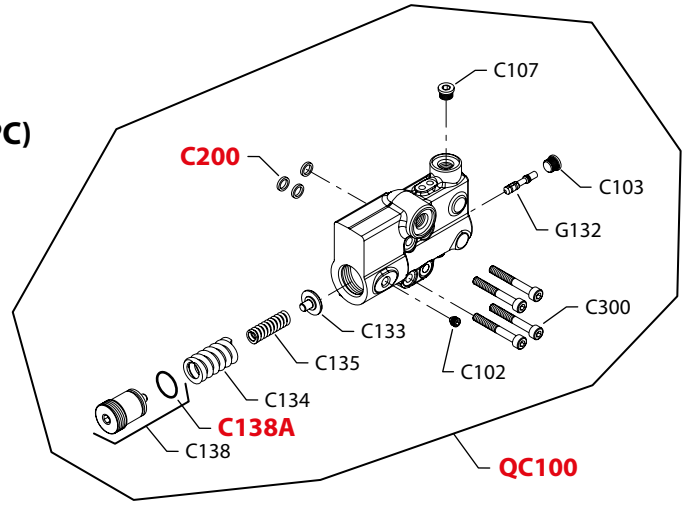

(RP)

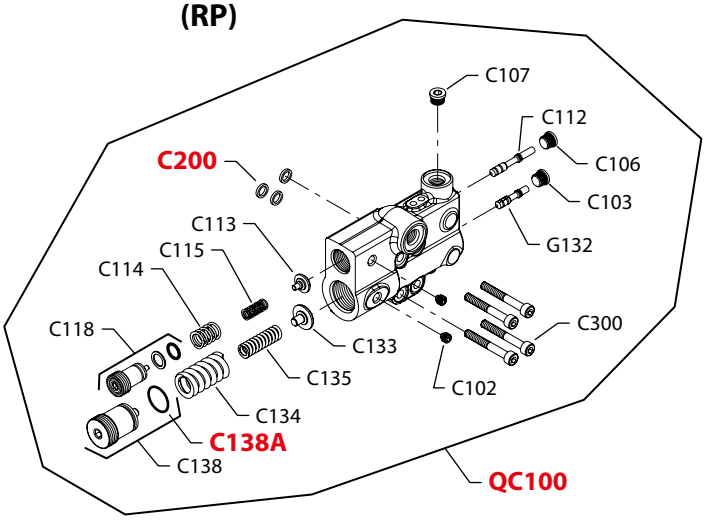

E103 295E

* = included in base motor seal kit Q210

Enlarged **bold** type item numbers are recommended part to stock for servicing.

Control

Common pressure compensating control parts

Order code	Item	Date begin	Date end	Part number	Part name	Qty. per model/kit
	C103	01-10		327007 (9005110-4400)	Plug assembly	1
	C107	01-10		327007 (9005110-4400)	Plug assembly	1
	C200	01-10		4740154	Seal ring	3
	C300	01-10		692889 (9007314-0611)	Screw	4
	G132	01-10		1700217	Spool, PC	1

Pressure compensating control

AC	C102	02-20		4740064	Set screw	1
	C133	02-20		4740247	Spring guide (SB-2002-034)	1
	C134	02-20		1700498	Spring, light	1
	C138	02-20		1700597	Adjusting plug assembly	1
	C138A	02-20		5000656	O-ring	1
	QC100	02-20		11115379	Control kit (SB-2001-004 & SB-2012-012)	1

PC	C102	01-10		4740064	Set screw	1
	C133	01-10		4740247	Spring guide (SB-2002-034)	1
	C134	01-10		1700130	Spring, outer	1
	C135	01-10		1700129	Spring, inner	1
	C138	01-10		11062379	Adjusting plug assembly (SB-2002-020)	1
	C138A	02-19		5000656	O-ring	1
	C138A	01-10	02-18	633354 (9004104-0180)	O-ring (SB-2002-020)	1
	QC100	01-10		11115378	Control kit (SB-2001-004 & SB-2012-012)	1

Remote pressure compensating control

RP	C102	02-32		4740064	Set screw	2
	C104	02-32		327007 (9005110-4400)	Plug assembly	1
	C107	02-32		327007 (9005110-4400)	Plug assembly	1
	C112	02-32		11039323	Spool, LS (SB-2009-029)	1
	C113	02-32		4740301	Spring guide	1
	C114	02-32		11044986	Spring, outer	1
	C115	02-32		11044985	Spring, inner	1
	C118	02-32		11062214	Adjusting plug (SB-2008-003)	1
	C133	02-32		4740247	Spring guide (SB-2002-034)	1
	C134	02-32		1700130	Spring, outer	1
	C135	02-32		1700129	Spring, inner	1
	C138	02-32		11062379	Adjusting plug assembly	1
	C138A	02-32		5000656	O-ring	1
	QC100	02-32		11115335	Control kit (SB-2001-004 & SB-2012-012)	1

Control

(EC)

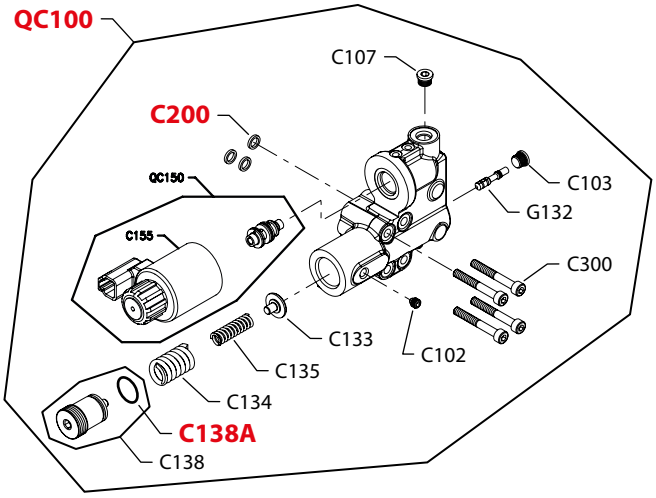

(ED)

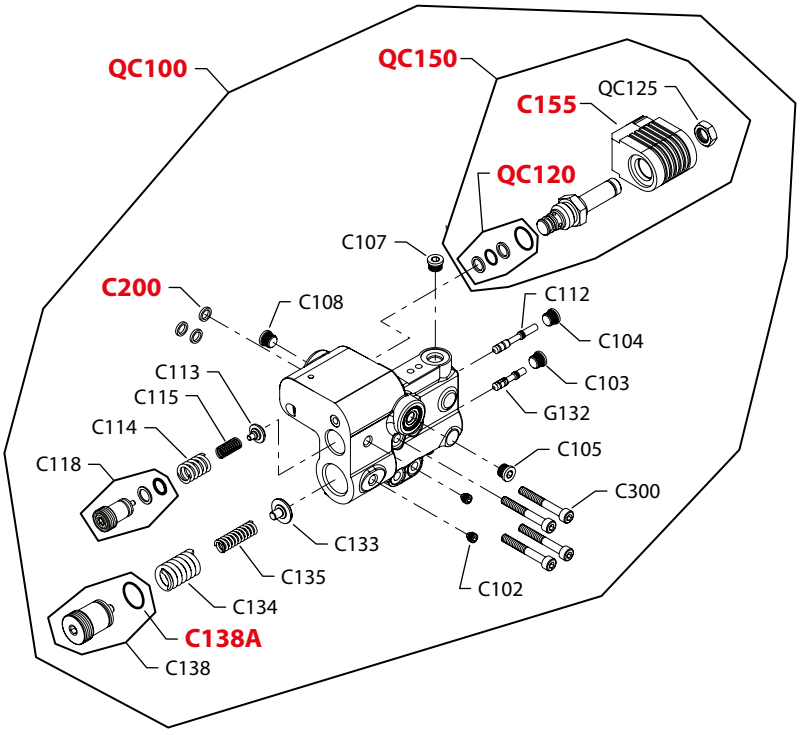

E101 598E

* = included in base motor seal kit Q210

Enlarged **bold** type item numbers are recommended part to stock for servicing.

Control

De-stroking control valve

Order code	Item	Date begin	Date end	Part number	Part name	Qty. per model/kit
EC	C102	10-42		4740064	Set screw	1
	C103	10-42		327007 (9005110-4400)	Plug assembly	1
	C107	10-42		327007 (9005110-4400)	Plug assembly	1
	C133	10-42		4740247	Spring guide	1
	C134	10-42		1700130	Spring, outer	1
	C135	10-42		1700129	Spring, inner	1
	C138	10-42		11062379	Adjusting plug assembly	1
	C138A	10-42		5000656	O-ring	1
	C155	10-42		0040443.0	Solenoid valve, 12 volt	1
	C200	10-42		4740154	Seal ring	3
	C300	10-42		692889 (9007314-0611)	Screw	4
	G132	10-42		1700217	Spool, PC	1
	QC100	10-42		11131610	Control kit, de-stroking (SB-2012-012)	1
	QC150	10-42		11105725	Solenoid valve, 12 volt	1

Dump control valve

ED	C102	02-21		4740064	Set screw	2
	C103	02-21		327007 (9005110-4400)	Plug assembly	1
	C104	08-29		327007 (9005110-4400)	Plug assembly	1
	C105	02-21		5000571	Plug assembly, M10	1
	C105	02-21	08-28	5000572	Plug assembly, M12	1
	C107	02-21		327007 (9005110-4400)	Plug assembly	1
	C108	02-21		327007 (9005110-4400)	Plug assembly	1
	C112	02-21		11039323	Spool, LS, 0.6mm	1
	C113	02-21		4740301	Spring guide	1
	C114	02-21		11044986	Spring, LS, outer	1
	C115	02-21		11044985	Spring, LS, inner	1
	C118	02-21		11062214	Adjusting plug	1
	C133	02-21		4740247	Spring guide	1
	C134	02-21		1700130	Spring, PC, outer	1
	C135	02-21		1700129	Spring, PC, inner	1
	C138	02-21		11062379	Adjusting plug assembly	1
	C138A	02-21		5000656	O-ring	1
	C155	02-21		322113	Coil, 12 volt	1
	C200	02-21		4740154	Seal ring	3
	C300	02-21		692889 (9007314-0611)	Screw	4
	G132	02-21		1700217	Spool, PC	1
	QC100	02-21		11114387	Control kit, dump valve (SB-2012-012)	1
	QC120	02-21		120228	Seal kit	1
	QC125	02-21		620186	Coil nut	1
	QC150	02-21		138719	Solenoid valve, 12 volt	1

Control

(EH & EJ)

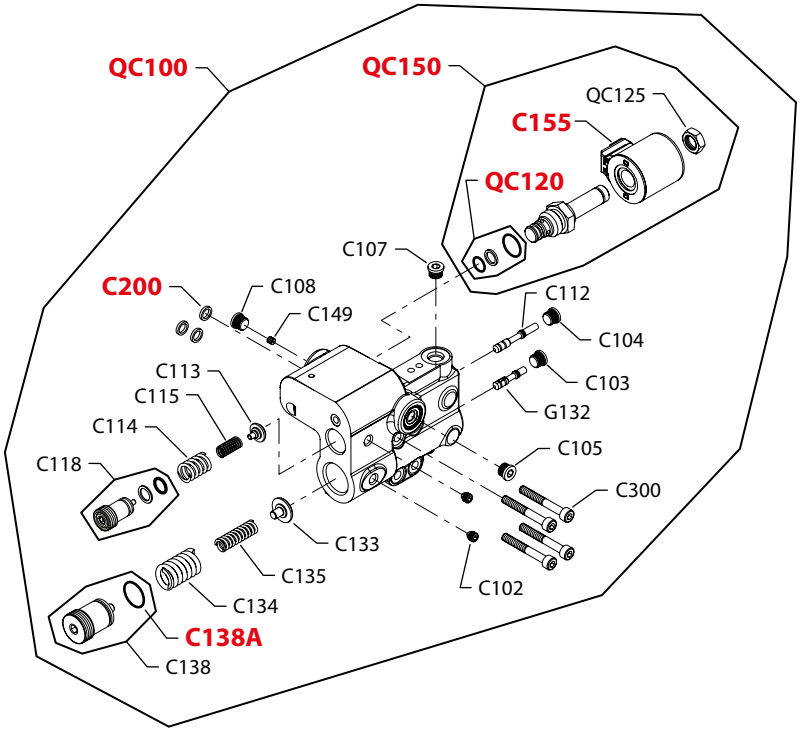

(EK & EL)

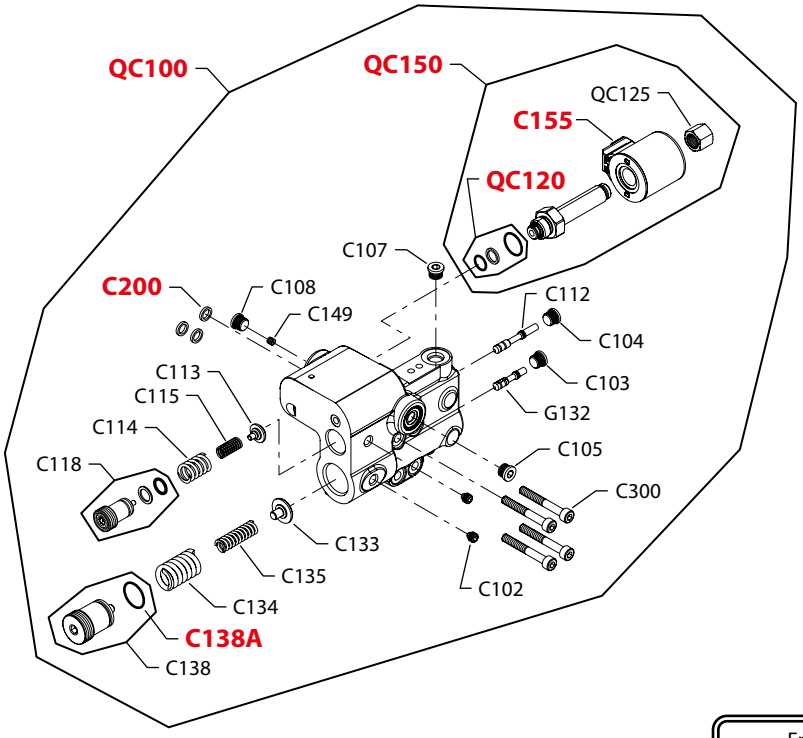

E101 605E

* = included in base motor seal kit Q210

Enlarged **bold** type item numbers are recommended part to stock for servicing.

Control

Common electric proportional control parts

Order code	Item	Date begin	Date end	Part number	Part name	Qty. per model/kit
	C102	06-38		4740064	Set screw	2
	C103	06-38		327007 (9005110-4400)	Plug assembly	1
	C104	06-38		327007 (9005110-4400)	Plug assembly	1
	C105	08-29		5000571	Plug assembly, M10	1
	C105	06-38	08-28	5000572	Plug assembly, M12	1
	C107	06-38		327007 (9005110-4400)	Plug assembly	1
	C108	06-38		327007 (9005110-4400)	Plug assembly	1
	C112	06-38		11039323	Spool, LS (SB-2009-029)	1
	C113	06-38		4740301	Spring guide	1
	C114	06-38		11044986	Spring, outer	1
	C115	06-38		11044985	Spring, outer	1
	C118	06-38		11062214	Adjusting plug (SB-2008-003)	1
	G132	06-38		11105010	Spool, PC, 0.8mm	1
	G132	06-38		11107639	Spool, PC, 1.0mm	1
	C133	06-38		4740247	Spring guide	1
	C134	06-38		1700130	Spring, outer	1
	C135	06-38		1700129	Spring, inner	1
	C138	06-38		11062379	Adjusting plug assembly	1
	C138A	06-38		5000656	O-ring	1
	C149	06-38		739144	Orifice plug, 0.8mm	1
	C200	06-38		4740154	Seal ring	3
	C300	06-38		692889 (9007314-0611)	Screw	4

Electric proportional control

EH	C155	06-38		1701291	Coil, 12 volt	1
	QC100	06-38		11114385	Control kit, electric proportional, 12 volt (SB-2012-012)	1
	QC120	06-38		11105714	Solenoid valve seal kit	1
	QC125	06-38		11104460	Coil nut	1
	QC150	06-38		11105724	Solenoid valve kit, 12 volt	1
EJ	C155	06-38		1701563	Coil	1
	QC100	06-38		11114389	Control kit, electric proportional, 24 volt (SB-2012-012)	1
	QC120	06-38		11105714	Solenoid valve seal kit	1
	QC125	06-38		11104460	Coil nut	1
	QC150	06-38		11104468	Solenoid valve kit, 24 volt	1
EK	C155	12-14		1701291	Coil, 12 volt	1
	QC100	12-14		11107314	Control kit, electric proportional, 12 volt (SB-2012-012)	1
	QC120	12-14		11105714	Solenoid valve seal kit	1
	QC125	12-14		11104459	Coil nut	1
	QC150	12-14		11104465	Solenoid valve kit, 12 volt, NO	1
EL	C155	12-14		1701563	Coil, 24 volt	1
	QC100	12-14		11107315	Control kit, electric proportional, 24 volt (SB-2012-012)	1
	QC120	12-14		11105714	Solenoid valve seal kit	1
	QC125	12-14		11104459	Coil nut	1
	QC150	12-14		11104466	Solenoid valve kit, 24 volt, NO	1

Control

(EM & EN)

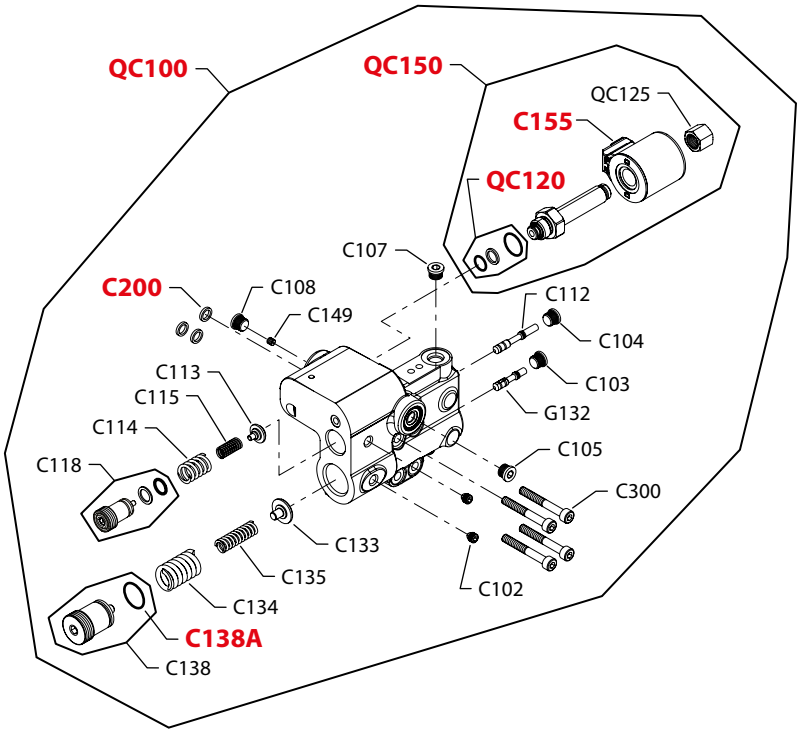

(EP)

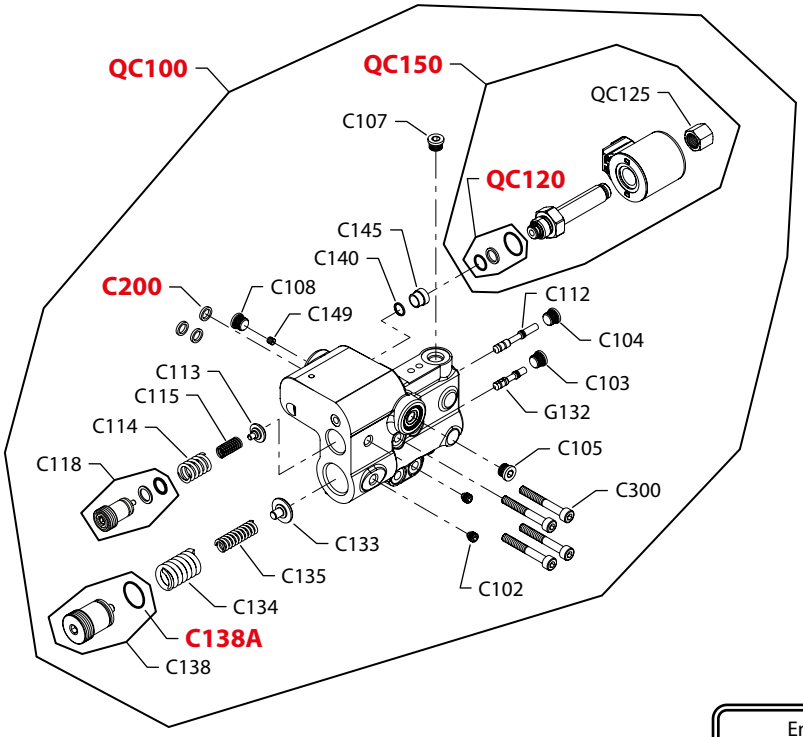

E103 264E

* = included in base motor seal kit Q210

Enlarged **bold** type item numbers are recommended part to stock for servicing.

Control

Common electric proportional control parts

Order code	Item	Date begin	Date end	Part number	Part name	Qty. per model/kit
	C102	06-38		4740064	Set screw	2
	C103	06-38		327007 (9005110-4400)	Plug assembly	1
	C104	06-38		327007 (9005110-4400)	Plug assembly	1
	C105	08-29		5000571	Plug assembly, M10	1
	C107	06-38		327007 (9005110-4400)	Plug assembly	1
	C108	06-38		327007 (9005110-4400)	Plug assembly	1
	C112	06-38		11039323	Spool, LS (SB-2009-029)	1
	C113	06-38		4740301	Spring guide	1
	C114	06-38		11044986	Spring, outer	1
	C115	06-38		11044985	Spring, outer	1
	C118	06-38		11062214	Adjusting plug (SB-2008-003)	1
	G132	06-38		11105010	Spool, PC, 0.8mm	1
	G132	06-38		11107639	Spool, PC, 1.0mm	1
	C133	06-38		4740247	Spring guide	1
	C134	06-38		1700130	Spring, outer	1
	C135	06-38		1700129	Spring, inner	1
	C138	06-38		11062379	Adjusting plug assembly	1
	C138A	06-38		5000656	O-ring	1
	C149	06-38		739144	Orifice plug, 0.8mm	1
	C200	06-38		4740154	Seal ring	3
	C300	06-38		692889 (9007314-0611)	Screw	4

Electric proportional control

EM	C155	12-14		1701291	Coil, 12 volt	1
	QC100	12-14		11107316	Control kit, electric proportional, 12 volt (SB-2012-012)	1
	QC120	12-14		11105714	Solenoid valve seal kit	1
	QC125	12-14		11104460	Coil nut	1
	QC150	12-14		11104467	Solenoid valve kit, 12 volt, NC	1
EN	C155	12-14		1701563	Coil, 24 volt	1
	QC100	12-14		11107317	Control kit, electric proportional, 24 volt (SB-2012-012)	1
	QC120	12-14		11105714	Solenoid valve seal kit	1
	QC125	12-14		11104460	Coil nut	1
	QC150	12-14		11104468	Solenoid valve kit, 24 volt, NC	1
EP	C140	10-02		1701026	Filter screen	1
	C145	10-02		1701005	Filter screen plug	1
	QC100	10-02		11114391	Control kit, electric proportional, 24 volt (SB-2012-012)	1
	QC120	10-02		11105714	Solenoid valve seal kit	1
	QC125	10-02		11105568	Coil nut	1
	QC150	10-02		1701008	Solenoid valve kit, 24 volt, NC	1

Control

(EA, EB, EE & EG)

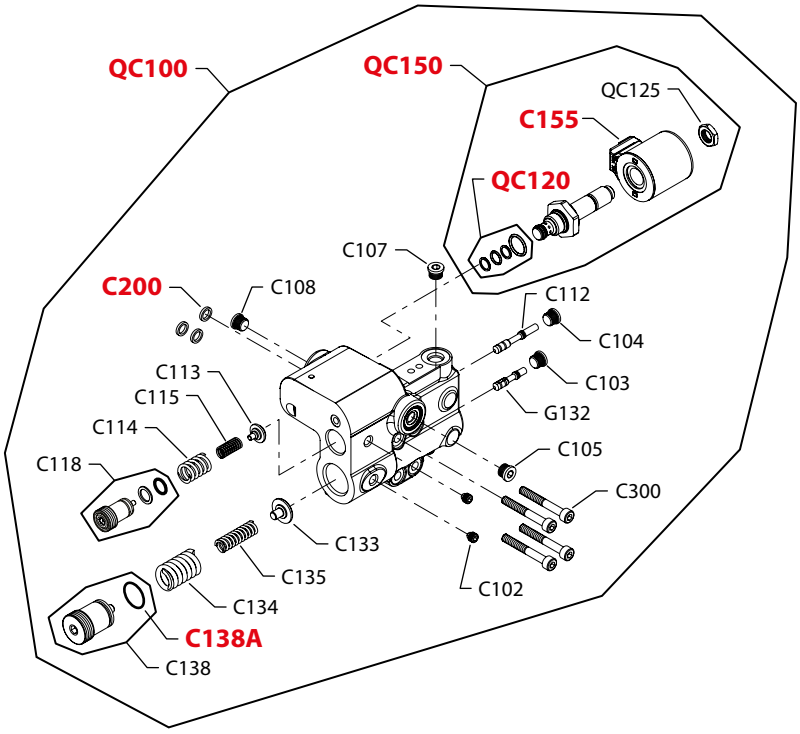

E103 265E

* = included in base motor seal kit Q210

Enlarged **bold** type item numbers are recommended part to stock for servicing.

Control

Common electric no/off control parts

Order code	Item	Date begin	Date end	Part number	Part name	Qty. per model/kit
	C102	06-38		4740064	Set screw	2
	C103	06-38		327007 (9005110-4400)	Plug assembly	1
	C104	06-38		327007 (9005110-4400)	Plug assembly	1
	C105	08-29		5000571	Plug assembly, M10	1
	C107	06-38		327007 (9005110-4400)	Plug assembly	1
	C108	06-38		327007 (9005110-4400)	Plug assembly	1
	C112	06-38		11039323	Spool, LS (SB-2009-029)	1
	C113	06-38		4740301	Spring guide	1
	C114	06-38		11044986	Spring, outer	1
	C115	06-38		11044985	Spring, outer	1
	C118	06-38		11062214	Adjusting plug (SB-2008-003)	1
	C133	06-38		4740247	Spring guide	1
	C134	06-38		1700130	Spring, outer	1
	C135	06-38		1700129	Spring, inner	1
	C138	06-38		11062379	Adjusting plug assembly	1
	C138A	06-38		5000656	O-ring	1
	C200	06-38		4740154	Seal ring	3
	C300	06-38		692889 (9007314-0611)	Screw	4

Electric on/off control

EA	C155	10-02		1701291	Coil, 12 volt	1
	G132	10-02		1700217	Spool, PC	1
	QC100	10-02		11114412	Control kit, electric on/off, 12 volt (SB-2012-012)	1
	QC120	10-02		11103621	Solenoid valve seal kit	1
	QC125	10-02		11104457	Coil nut	1
	QC150	10-02		11104461	Solenoid valve kit, 12 volt, NO	1
EB	C155	10-42		1701291	Coil, 12 volt	1
	G132	10-42		1700217	Spool, PC	1
	QC100	10-42		11114384	Control kit, electric on/off, 12 volt (SB-2012-012)	1
	QC120	10-42		11103621	Solenoid valve seal kit	1
	QC125	10-42		11104457	Coil nut	1
	QC150	10-42		11104463	Solenoid valve kit, 12 volt, NC	1
EE	C155	11-26		1701563	Coil, 24 volt	1
	G132	11-26		1700217	Spool, PC	1
	QC100	11-26		11114390	Control kit, electric on/off, 24 volt (SB-2012-012)	1
	QC120	11-26		11103621	Solenoid valve seal kit	1
	QC125	11-26		11104457	Coil nut	1
	QC150	11-26		11104464	Solenoid valve kit, 24 volt, NC	1
EG	C155	12-40		1701563	Coil, 24 volt	1
	G132	12-40		1700217	Spool, PC	1
	QC100	12-40		11117666	Control kit, electric on/off, 24 volt (SB-2012-012)	1
	QC120	12-40		11103621	Solenoid valve seal kit	1
	QC125	12-40		11104457	Coil nut	1
	QC150	12-40		11104462	Solenoid valve kit, 24 volt, NO	1

Orifice

(A & B)

Prior to 12-40.

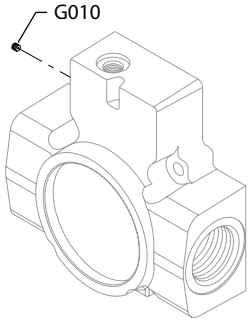

(H, J, K & N)

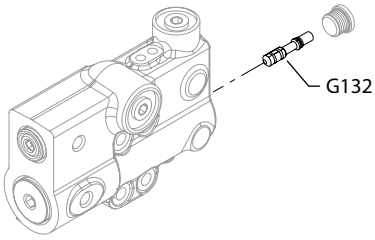

After 12-39

(E & F)

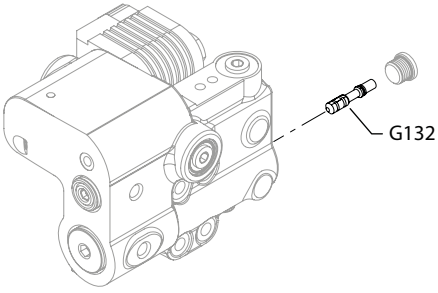

After 12-39

(L)

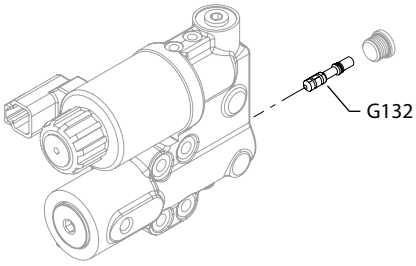

After 12-39

E103 266E

* = included in base motor seal kit Q210

Enlarged **bold** type item numbers are recommended part to stock for servicing.

Orifice

Choke orifice

Order code	Item	Date begin	Date end	Part number	Part name	Qty. per model/kit
A	G132	12-40		11105010	Control spool, PC, 0.8mm	1
	G010	04-10	12-39	739144	Orifice plug, 0.8 mm	1
B	G132	12-40		11114417	Control spool, PC w/flat, 1.0mm	1
	G010	04-26	12-39	519659	Orifice plug, 1.0 mm	1
E	G132	12-40		11105010	Control spool, PC w/flat, 0.8mm	1
F	G132	12-40		11107639	Control spool, PC w/flat, 1.0mm	1
H	G132	12-40		1700677	Control spool, PC, none	1
J	G132	12-40		11105009	Control spool, PC, 0.8mm	1
K	G132	12-40		11114417	Control spool, PC w/flat, 1.0mm	1
L	G132	12-40		11075974	Control spool positive, PC, none, special	1
N	G132	12-40		1700217	Control spool, PC, none	1
		04-10	12-39	none		

Gain orifice

3				none		

Shaft, auxiliary flange and end cap

(C2AG)

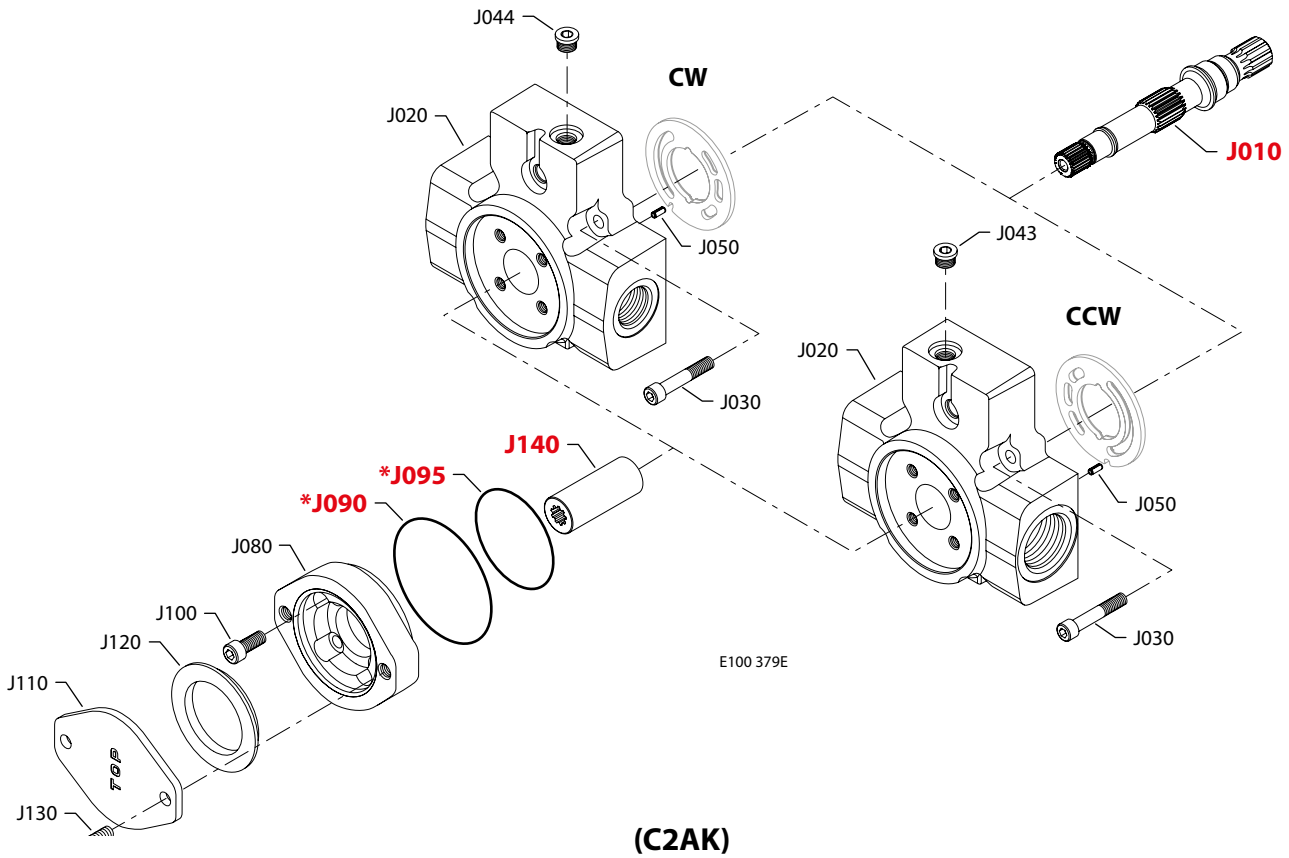

(C2AK)

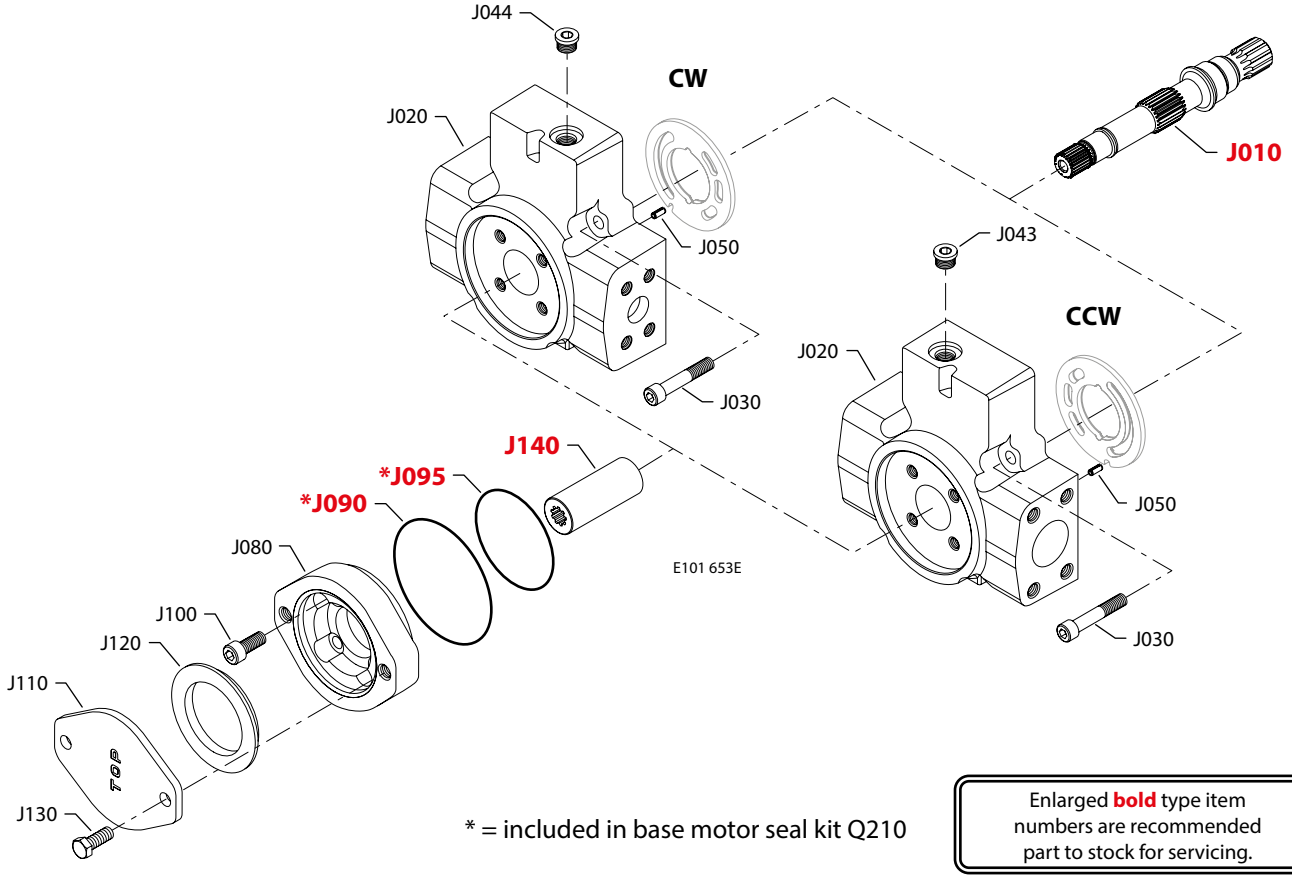

* = included in base motor seal kit Q210

Enlarged **bold** type item numbers are recommended part to stock for servicing.

Shaft, auxiliary flange and end cap

Shaft/auxiliary flange/end cap

Order code	Item	Date begin	Date end	Part number	Part name	Qty. per model/kit
C2AG	J010	01-01		1700177	Shaft, 13 tooth spline with auxiliary drive	1
	J020	01-19		11056184	End cap, CW, radial ports, LRR (SB-2002-042 & SB-2008-064)	1
	J020	01-19		11056189	End cap, CCW, radial ports, LRL (SB-2002-042 & SB-2008-064)	1
	J030	01-01		672295 (9007314-1010)	Screw, M10	4
	J043	01-19		140644	Plug assembly, 9/16-18, LRL	1
	J043	01-01	01-18	5000438	Plug assembly, M14, LRL	1
	J044	01-19		140644	Plugassembly, 9/16-18, LRR	1
	J044	01-01	01-18	5000438	Plug assembly, M14, LRR	1
	J050	01-01		9004700-1907	Pin	1
	J080	01-01		4570289	Adapter flange, A	1
	J090	01-01		9004100-1550	O-ring	1
	J095	01-01		545434 (9004100-0420)	O-ring	1
	J100	01-01		5000489	Screw, M10	4
	J110	01-01		4460586	Cover plate	1
	J120	01-01		4800482	A pad seal	1
	J130	01-01		9007200-3712	Screw	2
	J140	01-01		1701364	Coupling, 9 tooth	1
C2AK	J010	07-12		1700177	Shaft, 13 tooth spline w/auxiliary drive	1
	J020	07-12		11025143	End cap, CW, radial ports, LRR (SB-2008-064)	1
	J020	07-12		11060146	End cap, CCW, radial ports, LRL (SB-2008-064)	1
	J030	07-12		672295 (9007314-1010)	Screw, M10	4
	J043	07-12		140644	Plug assembly, LRL	1
	J044	07-12		140644	Plug assembly, LRR	1
	J050	07-12		9004700-1907	Pin	1
	J080	07-12		4570289	Adapter flange, A	1
	J090	07-12		9004100-1550	O-ring	1
	J095	07-12		545434 (9004100-0420)	O-ring	1
	J100	07-12		5000489	Screw, M10	4
	J110	07-12		4460586	Cover plate	1
	J120	07-12		4800482	A pad seal	1
	J130	07-12		9007200-3712	Screw	2
	J140	07-12		1701364	Coupling, 9 tooth	1

Shaft, auxiliary flange and end cap

(C2AR)

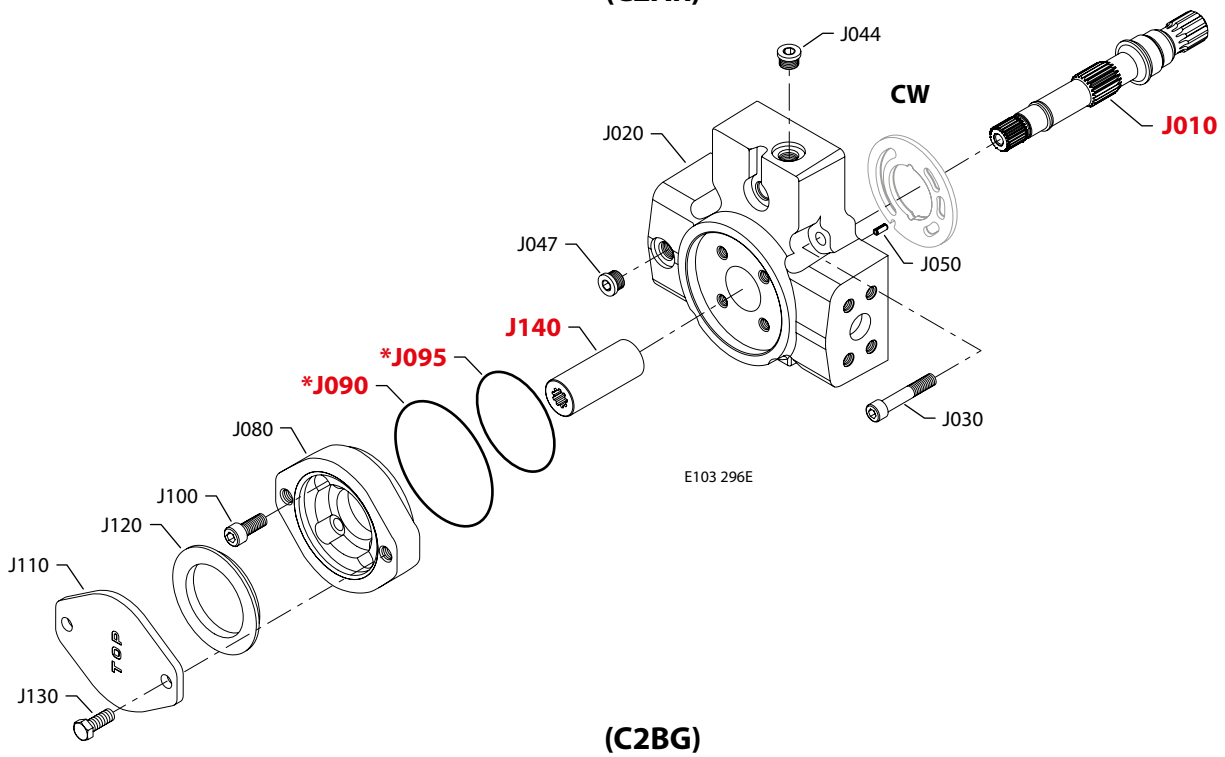

(C2BG)

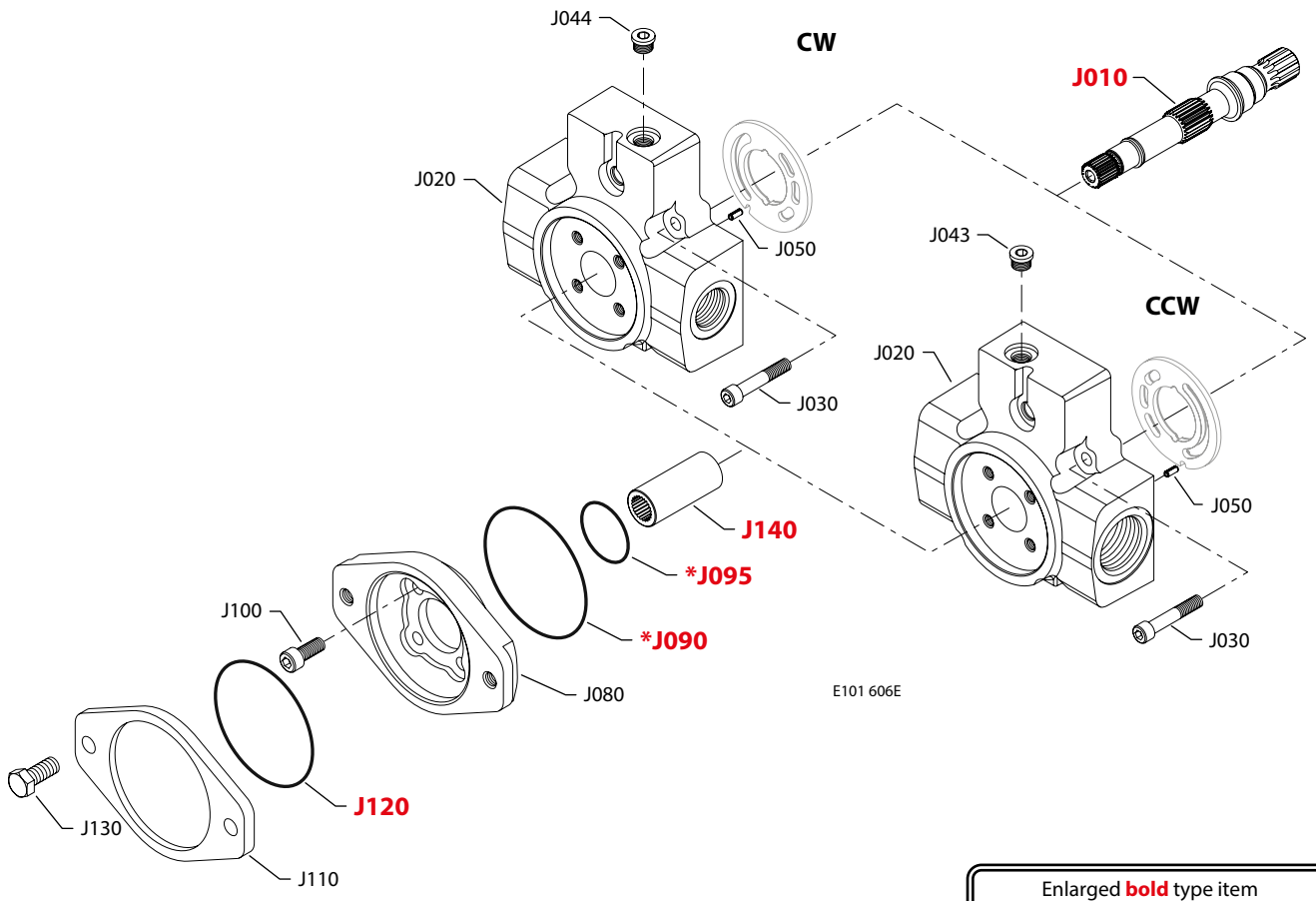

* = included in base motor seal kit Q210

Enlarged **bold** type item numbers are recommended part to stock for servicing.

Shaft, auxiliary flange and end cap

Shaft/auxiliary flange/end cap

Order code	Item	Date begin	Date end	Part number	Part name	Qty. per model/kit
C2AR	J010	11-29		1700177	Shaft, 13 tooth with auxiliary drive	1
	J020	11-29		11079778	End cap, CW, radial ports, LRR	1
	J030	11-29		672295 (9007314-1010)	Screw, M10	4
	J044	11-29		140644	Plug assembly	1
	J047	11-29		140644	Plug assembly	1
	J050	11-29		9004700-1907	Pin	1
	J080	11-29		4570289	Adapter flange, A	1
	J090	11-29		9004100-1550	O-ring	1
	J095	11-29		545434 (9004100-0420)	O-ring	1
	J100	11-29		5000489	Screw, M10	4
	J110	11-29		4460586	Cover plate	1
	J120	11-29		4800482	A pad seal	1
	J130	11-29		9007200-3712	Screw	2
	J140	11-29		1701364	Coupling, 9 tooth	1
C2BG	J010	01-01		1700177	Shaft, 13 tooth with auxiliary drive	1
	J020	01-01		11056184	End cap, CW, radial ports, LRR (SB-2002-042 & SB-2008-064)	1
	J020	01-01		11056189	End cap, CCW, radial ports, LRL (SB-2002-042 & SB-2008-064)	1
	J030	01-01		672295 (9007314-1010)	Screw, M10	4
	J043	01-19		140644	Plug assembly, 9/16-18, LRL	1
	J043	01-01	01-18	5000438	Plug assembly, M14, LRL	1
	J044	01-19		140644	Plug assembly, 9/16-18, LRR	1
	J044	01-01	01-18	5000438	Plug assembly, M14, LRR	1
	J050	01-01		9004700-1907	Pin	1
	J080	01-01		4570210	Adapter flange, B	1
	J090	01-01		9004100-1550	O-ring	1
	J095	01-01		545434 (9004100-0420)	O-ring	1
	J100	01-01		5000489	Screw, M10	4
	J110	01-01		4460370	Cover plate	1
	J120	01-01		9004104-0440	O-ring	1
	J130	01-01		9007200-5021	Screw	2
	J140	01-01		1701365	Coupling, 13 tooth	1

Shaft, auxiliary flange and end cap

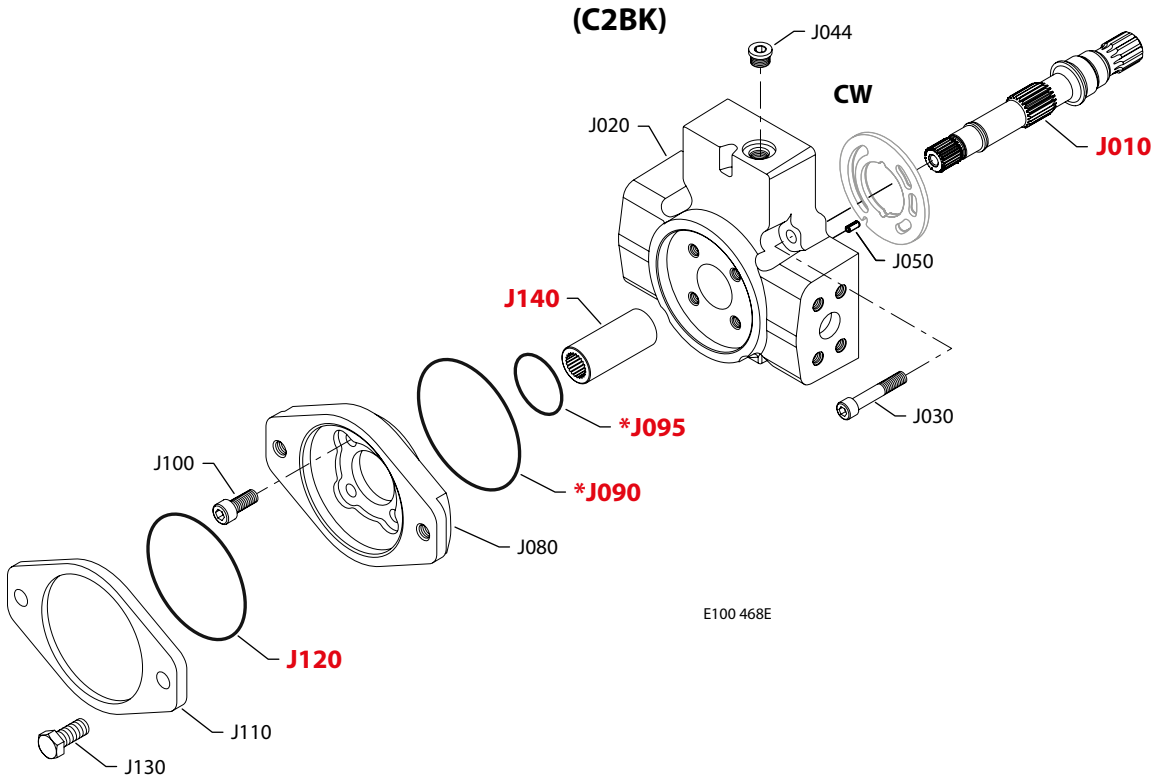

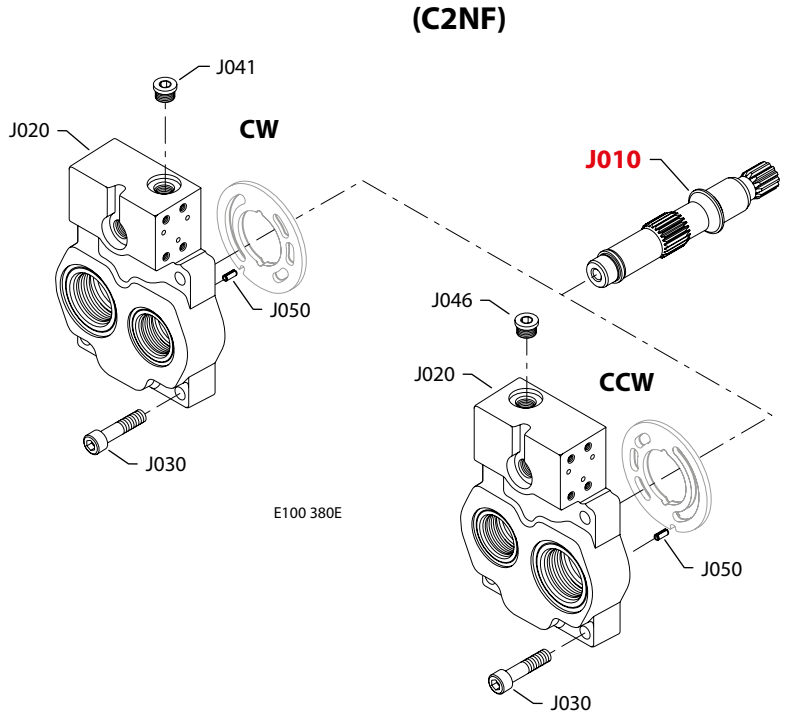

* = included in base motor seal kit Q210

Enlarged **bold** type item numbers are recommended part to stock for servicing.

Shaft, auxiliary flange and end cap

Shaft/auxiliary flange/end cap

Order code	Item	Date begin	Date end	Part number	Part name	Qty. per model/kit
C2BK	J010	07-37		1700177	Shaft, 13 tooth with auxiliary drive	1
	J020	07-37		11025143	End cap, CW, radial ports, LRR (SB-2008-064)	1
	J030	07-37		672295 (9007314-1010)	Screw, M10	4
	J044	07-37		140644	Plug assembly	1
	J050	07-37		9004700-1907	Pin	1
	J080	07-37		4570210	Adapter flange, B	1
	J090	07-37		9004100-1550	O-ring	1
	J095	07-37		545434 (9004100-0420)	O-ring	1
	J100	07-37		5000489	Screw, M10	4
	J110	07-37		4460370	Cover plate	1
	J120	07-37		9004104-0440	O-ring	1
	J130	07-37		9007200-5021	Screw	2
	J140	07-37		1701365	Coupling, 13 tooth	1
C2NF	J010	00-47		1700062	Shaft, 13 tooth without auxiliary drive	1
	J020	01-19		11056190	End cap, CW, axial ports, LRR (SB-2002-042 & SB-2008-064)	1
	J020	01-19		11056191	End cap, CCW, axial ports, LRL (SB-2002-042 & SB-2008-064)	1
	J030	00-47		672295 (9007314-1010)	Screw, M10	4
	J041	01-19		140644	Plug assembly, 9/16-18, LRR	1
	J041	00-47	01-18	5000438	Plug assembly, M14, LRR	1
	J046	01-19		140644	Plug assembly, 9/16-18, LRL	1
	J046	00-47	01-18	5000438	Plug assembly, M14, LRL	1
	J050	00-47		9004700-1907	Pin	1

Shaft, auxiliary flange and end cap

(C2NG & C2NJ)

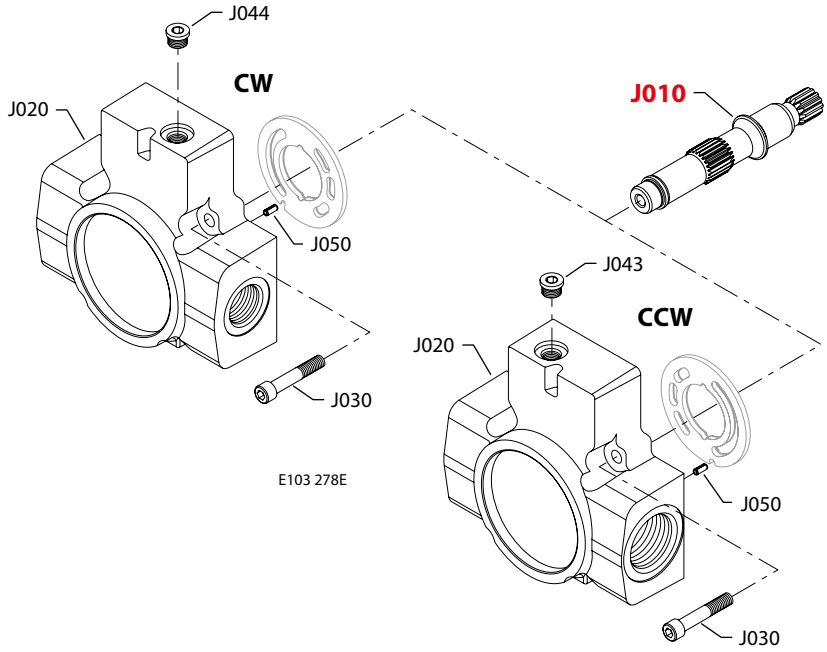

(C2NK)

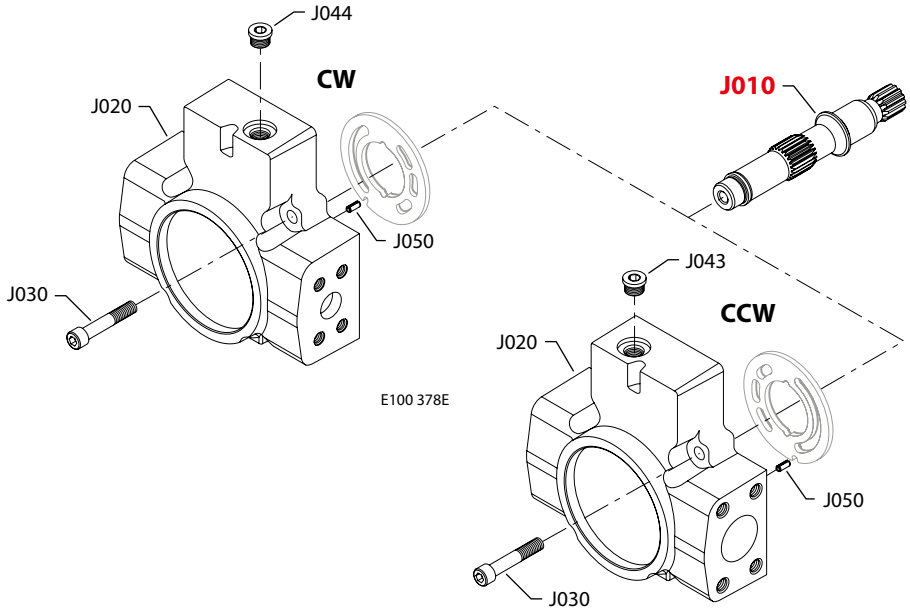

Enlarged **bold** type item numbers are recommended part to stock for servicing.

Shaft, auxiliary flange and end cap

Shaft/auxiliary flange/end cap

Order code	Item	Date begin	Date end	Part number	Part name	Qty. per model/kit
C2NG	J010	00-47		1700062	Shaft, 13 tooth without auxiliary drive	1
	J020	01-19		11056159	End cap, CW, radial ports, LRR (SB-2002-042 & SB-2008-064)	1
	J020	01-19		11056186	End cap, CCW, radial ports, LRL (SB-2002-042 & SB-2008-064)	1
	J030	00-47		672295 (9007314-1010)	Screw, M10	4
	J043	01-19		140644	Plug assembly, 9/16-18, LRL	1
	J043	00-47	01-18	5000438	Plug assembly, M14, LRL	1
	J044	01-19		140644	Plug assembly, 9/16-18, LRR	1
	J044	00-47	01-18	5000438	Plug assembly, M14, LRR	1
	J050	00-47		9004700-1907	Pin	1
C2NJ	J010	06-44		1700062	Shaft, 13 tooth without auxiliary drive	1
	J020	06-44		11056182	End cap, CW, radial ports, LRR (SB-2008-064)	1
	J020	06-44		11056187	End cap, CCW, radial ports, LRL (SB-2008-064)	1
	J030	06-44		672295 (9007314-1010)	Screw, M10	4
	J043	06-44		140644	Plug assembly, LRL	1
	J044	06-44		140644	Plug assembly, LRR	1
	J050	06-44		9004700-1907	Pin	1
C2NK	J010	10-02		1700062	Shaft, 13 tooth without auxiliary drive	1
	J020	10-02		11070045	End cap, CW, radial ports, LRR (SB-2008-064)	1
	J020	10-02		11052895	End cap, CCW, radial ports, LRL (SB-2008-064)	1
	J030	10-02		672295 (9007314-1010)	Screw, M10	4
	J043	10-02		140644	Plug assembly, LRL	1
	J044	10-02		140644	Plug assembly, LRR	1
	J050	10-02		9004700-1907	Pin	1

Shaft, auxiliary flange and end cap

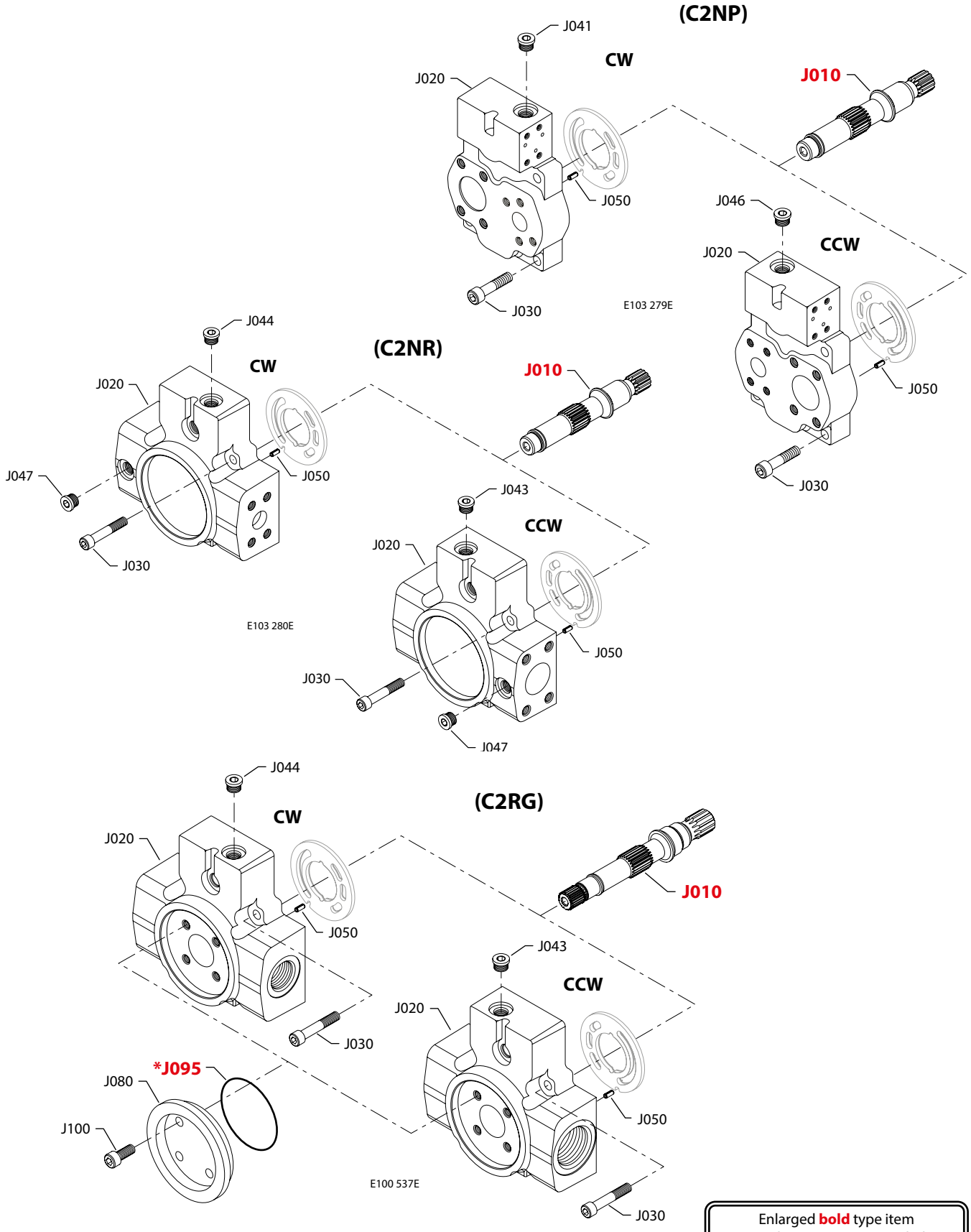

* = included in base motor seal kit Q210

Enlarged **bold** type item numbers are recommended part to stock for servicing.

Shaft, auxiliary flange and end cap

Shaft/auxiliary flange/end cap

Order code	Item	Date begin	Date end	Part number	Part name	Qty. per model/kit
C2NP	J010	03-20		1700062	Shaft, 13 tooth without auxiliary drive	1
	J020	03-20		11098332	End cap, CW, axial metric ports, LRR (SB-2008-064)	1
	J020	03-20		11056192	End cap, CCW, axial metric ports, LRL (SB-2008-064)	1
	J030	03-20		672295 (9007314-1010)	Screw, M10	4
	J041	03-20		5000438	Plug assembly, M14, LRR	1
	J046	03-20		5000438	Plug assembly, M14, LRL	1
	J050	03-20		9004700-1907	Pin	1
C2NR	J010	11-19		1700062	Shaft, 13 tooth without auxiliary drive	1
	J020	11-19		11101279	End cap, CW, radial metric ports, LRR	1
	J020	11-19		11071388	End cap, CCW, radial metric ports, LRL	1
	J030	11-19		672295 (9007314-1010)	Screw, M10	4
	J043	11-19		140644	Plug assembly, LRL	1
	J044	11-19		140644	Plug assembly, LRR	1
	J047	11-19		140644	Plug assembly	1
	J050	11-19		9004700-1907	Pin	1
C2RG	J010	01-23		1700177	Shaft, 13 tooth with auxiliary drive	1
	J020	01-23		11056184	End cap, CW, radial ports, LRR (SB-2008-064)	1
	J020	01-23		11056189	End cap, CCW, radial ports, LRL (SB-2008-064)	1
	J030	01-23		672295 (9007314-1010)	Screw, M10	4
	J043	01-23		140644	Plug assembly, LRL	1
	J044	01-23		140644	Plug assembly, LRR	1
	J050	01-23		9004700-1907	Pin	1
	J080	01-23		4570179	Running cover	1
	J090	01-23		9004100-1550	O-ring	1
	J095	01-23		9004104-0310	O-ring	1
	J100	01-23		5000489	Screw, M10	4

Shaft, auxiliary flange and end cap

(C2RK)

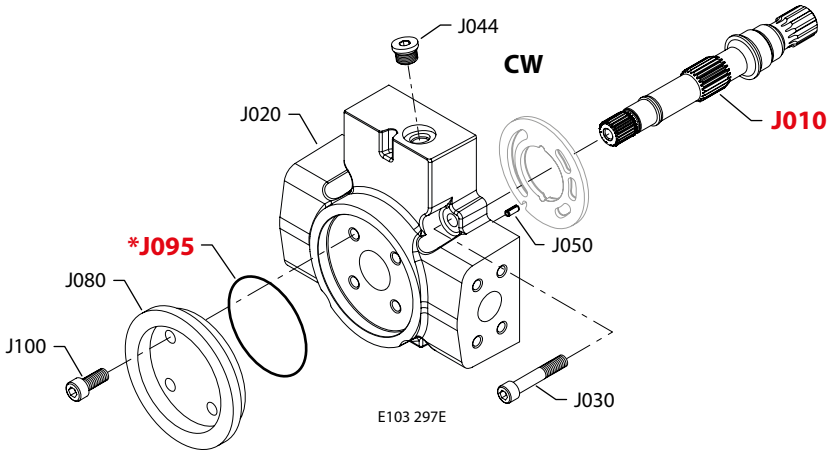

(C2RR)

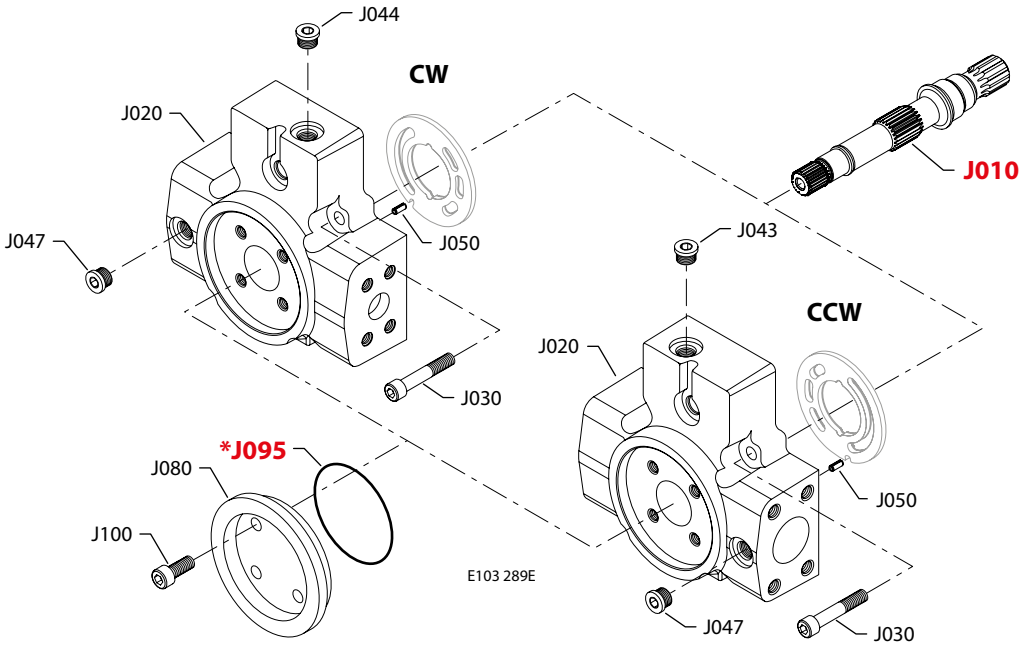

* = included in base motor seal kit Q210

Enlarged **bold** type item numbers are recommended part to stock for servicing.

Shaft, auxiliary flange and end cap

Shaft/auxiliary flange/end cap

Order code	Item	Date begin	Date end	Part number	Part name	Qty. per model/kit
C2RK	J010	04-11		1700177	Shaft, 13 tooth with auxiliary drive	1
	J020	04-11		11025143	End cap, CW, radial ports, LRR (SB-2008-064)	1
	J030	04-11		672295 (9007314-1010)	Screw, M10	4
	J044	04-11		140644	Plug assembly	1
	J050	04-11		9004700-1907	Pin	1
	J080	04-11		4570179	Running cover	1
	J090	04-11		9004100-1550	O-ring	1
	J095	04-11		9004104-0310	O-ring	1
	J100	04-11		5000489	Screw, M10	4
C2RR	J010	13-28		1700177	Shaft, 13 tooth with auxiliary drive	1
	J020	13-28		11079778	End cap, CW, radial ports, LRR	1
	J020	13-28		11060617	End cap, CCW, radial ports, LRL	1
	J030	13-28		672295 (9007314-1010)	Screw, M10	4
	J043	13-28		140644	Plug assembly, LRL	1
	J044	13-28		140644	Plug assembly, LRR	1
	J047	13-28		140644	Plug assembly	1
	J050	13-28		9004700-1907	Pin	1
	J080	13-28		4570179	Running cover	1
	J090	13-28		9004100-1550	O-ring	1
	J095	13-28		9004104-0310	O-ring	1
	J100	13-28		5000489	Screw, M10	4

Shaft, auxiliary flange and end cap

(C2TG)

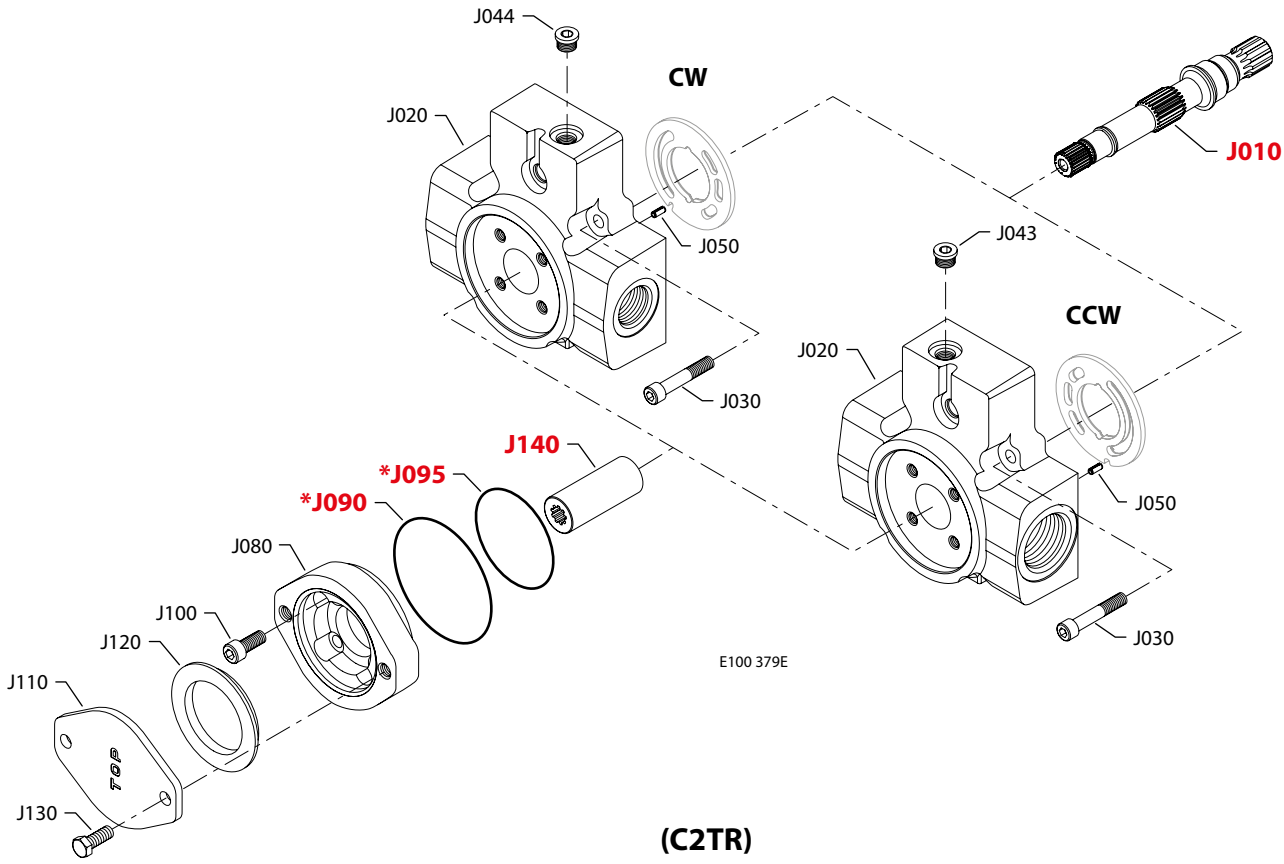

(C2TR)

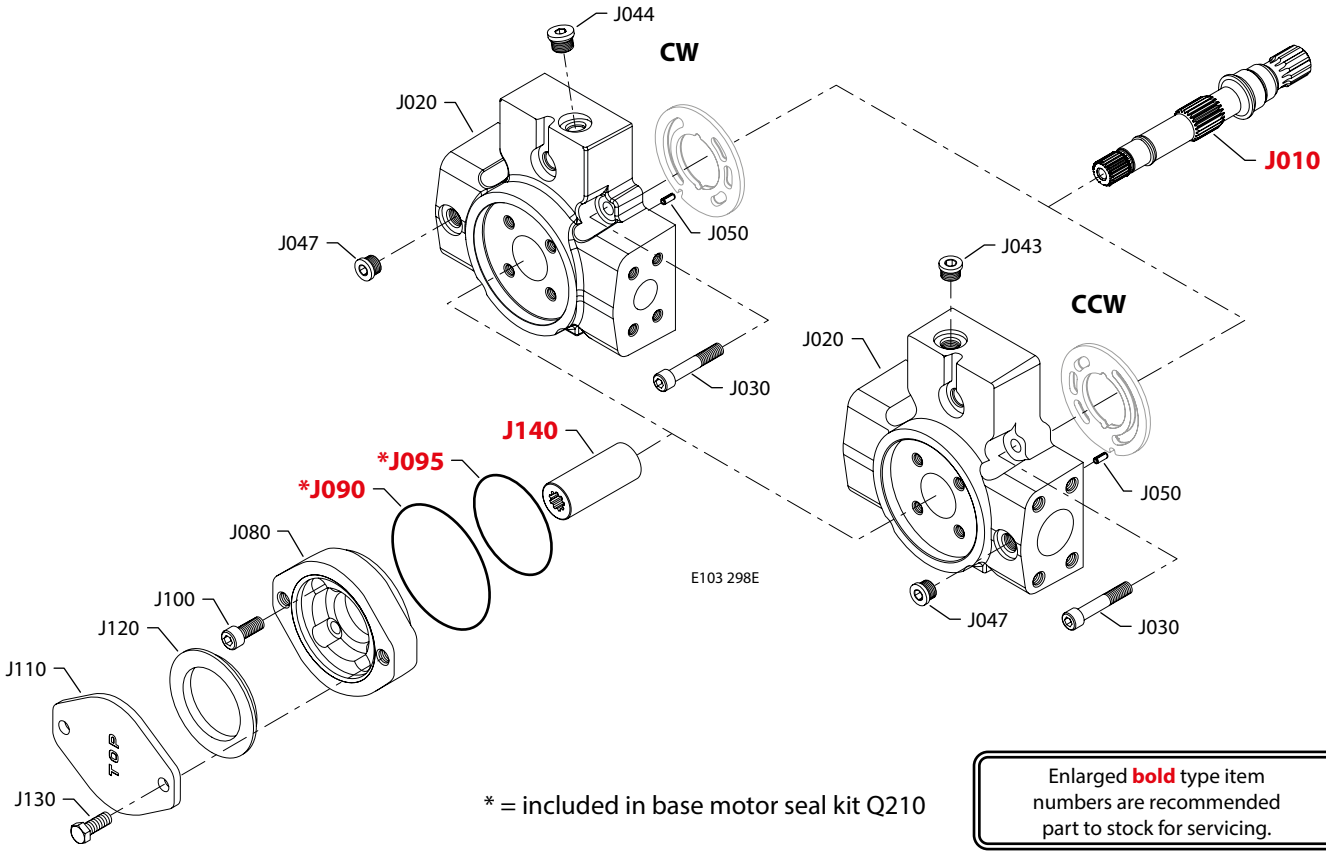

* = included in base motor seal kit Q210

Enlarged **bold** type item numbers are recommended part to stock for servicing.

Shaft, auxiliary flange and end cap

Shaft/auxiliary flange/end cap

Order code	Item	Date begin	Date end	Part number	Part name	Qty. per model/kit
C2TG	J010	01-01		1700177	Shaft, 13 tooth with auxiliary drive	1
	J020	01-01		11056184	End cap, CW, radial ports, LRR (SB-2008-064)	1
	J020	01-01		11056189	End cap, CCW, radial ports, LRL (SB-2008-064)	1
	J030	01-01		672295 (9007314-1010)	Screw, M10	4
	J043	01-19		140644	Plug assembly, 9/16-18, LRL	1
	J043	01-01	01-18	5000438	Plug assembly, M14, LRL	1
	J044	01-19		140644	Plug assembly, 9/16-18, LRR	1
	J044	01-01	01-18	5000438	Plug assembly, M14, LRR	1
	J050	01-01		9004700-1907	Pin	1
	J080	01-01		4570289	Adapter flange, A	1
	J090	01-01		9004100-1550	O-ring	1
	J095	01-01		545434 (9004100-0420)	O-ring	1
	J100	01-01		5000489	Screw, M10	4
	J110	01-01		4460586	Cover plate	1
	J120	01-01		4800482	A pad seal	1
	J130	01-01		9007200-3712	Screw	2
	J140	01-01		11017433	Coupling, 11 tooth	1
C2TR	J010	13-37		1700177	Shaft, 13 tooth with auxiliary drive	1
	J020	13-37		11079778	End cap, CW, radial ports, LRR	1
	J020	13-37		11060617	End cap, CCW, radial ports, LRL	1
	J030	13-37		672295 (9007314-1010)	Screw, M10	4
	J043	13-37		140644	Plug assembly, LRL	1
	J044	13-37		140644	Plug assembly, LRR	1
	J047	13-37		140644	Plug assembly	1
	J050	13-37		9004700-1907	Pin	1
	J080	13-37		4570289	Adapter flange, A	1
	J090	13-37		9004100-1550	O-ring	1
	J095	13-37		545434 (9004100-0420)	O-ring	1
	J100	13-37		5000489	Screw, M10	4
	J110	13-37		4460586	Cover plate	1
	J120	13-37		4800482	A pad seal	1
	J130	13-37		9007200-3712	Screw	2
	J140	13-37		11017433	Coupling, 11 tooth	1

Shaft, auxiliary flange and end cap

(C3AG)

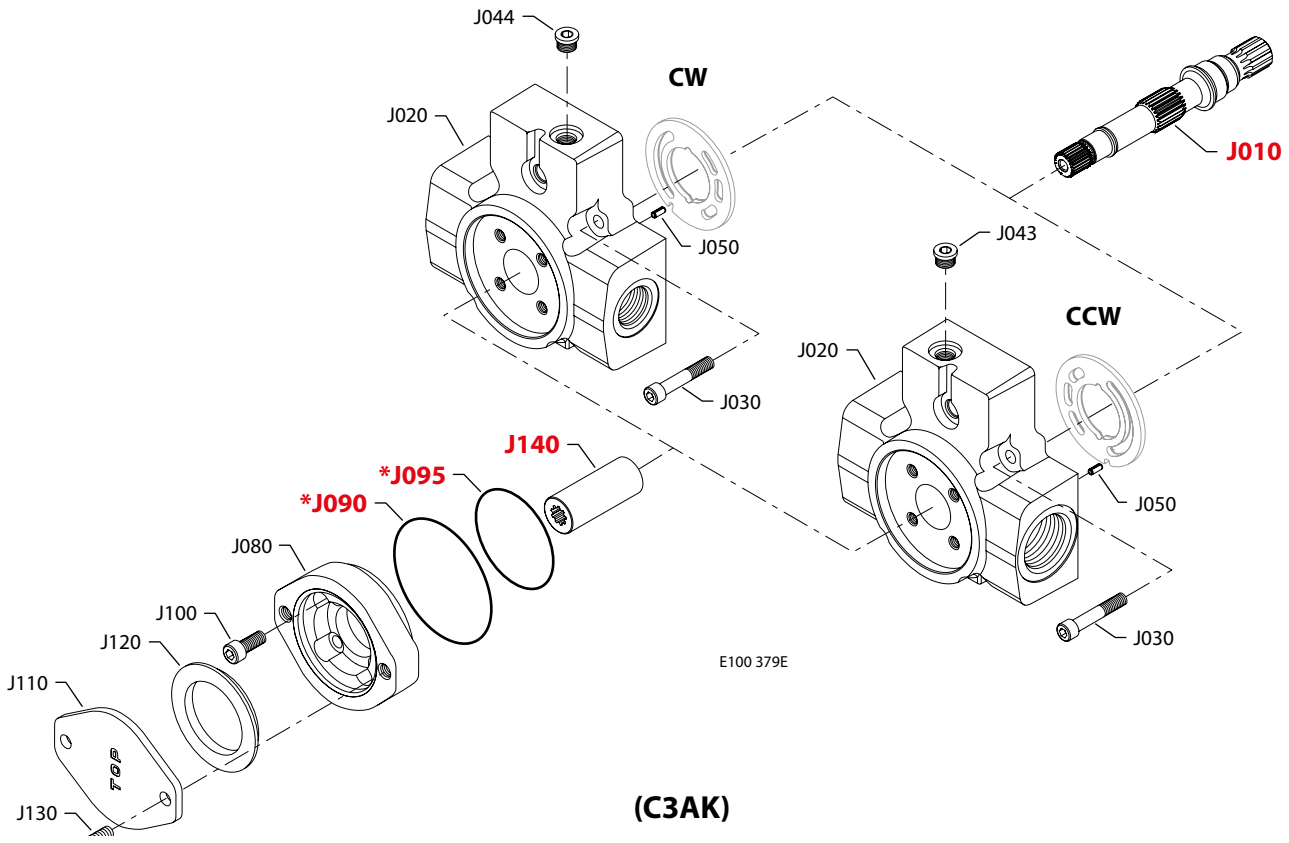

(C3AK)

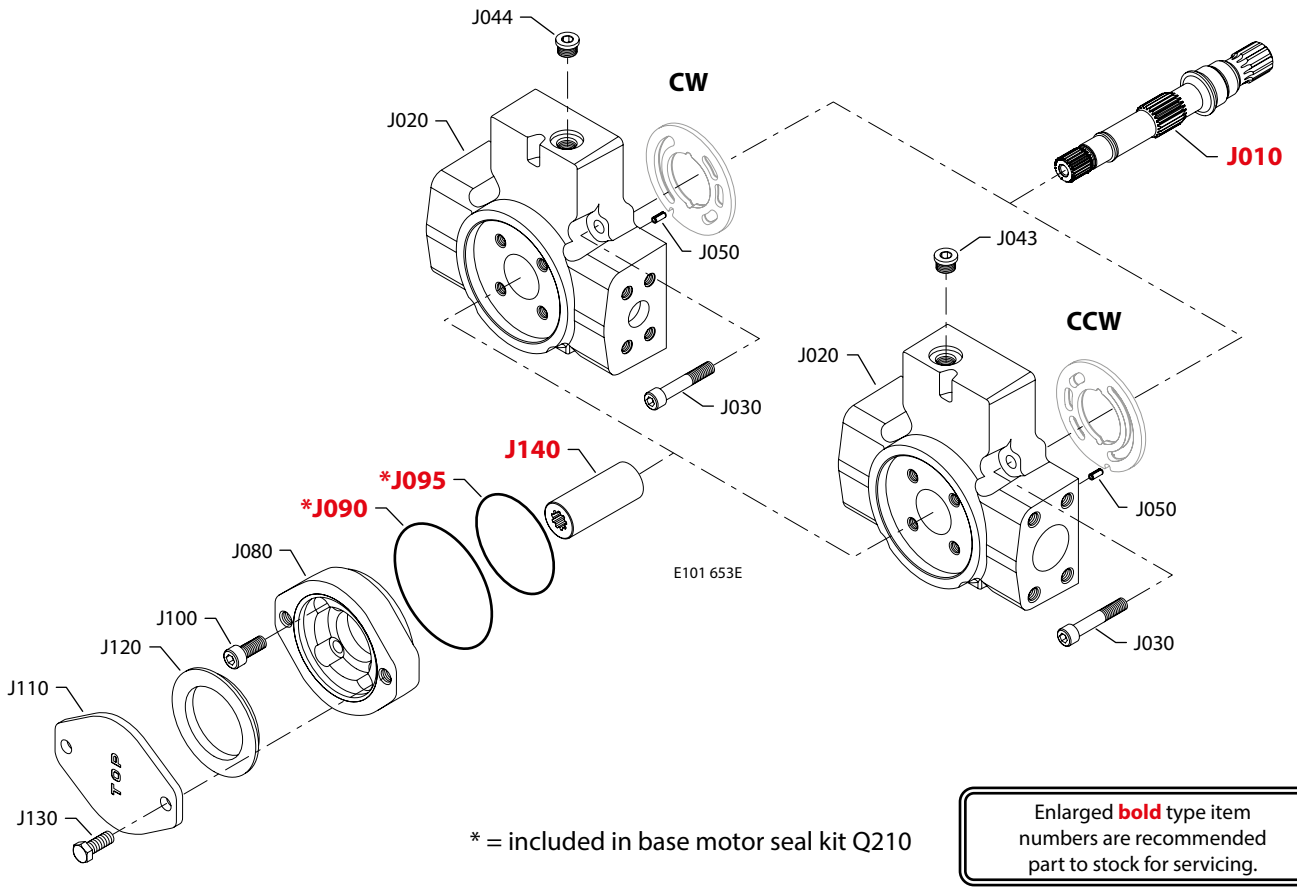

* = included in base motor seal kit Q210

Enlarged **bold** type item numbers are recommended part to stock for servicing.

Shaft, auxiliary flange and end cap

Shaft/auxiliary flange/end cap

Order code	Item	Date begin	Date end	Part number	Part name	Qty. per model/kit
C3AG	J010	01-01		1700313	Shaft, 15 tooth spline with auxiliary drive	1
	J020	01-01		11056184	End cap, CW, radial ports, LRR	1
	J020	01-01		11056189	End cap, CCW, radial ports, LRL	1
	J030	01-01		672295 (9007314-1010)	Screw, M10	4
	J043	01-19		140644	Plug assembly, 9/16-18, LRL	1
	J043	01-01	01-18	5000438	Plug assembly, M14, LRL	1
	J044	01-19		140644	Plug assembly, 9/16-18, LRR	1
	J044	01-01	01-18	5000438	Plug assembly, M14, LRR	1
	J050	01-01		9004700-1907	Pin	1
	J080	01-01		4570289	Adapter flange, A	1
	J090	01-01		9004100-1550	O-ring	1
	J095	01-01		545434 (9004100-0420)	O-ring	1
	J100	01-01		5000489	Screw, M10	4
	J110	01-01		4460586	Cover plate	1
	J120	01-01		4800482	A pad seal	1
	J130	01-01		9007200-3712	Screw	2
	J140	01-01		1701364	Coupling, 9 tooth	1
C3AK	J010	10-02		1700313	Shaft, 15 tooth spline with auxiliary drive	1
	J020	10-02		11025143	End cap, CW, radial ports, LRR	1
	J020	10-02		11060146	End cap, CCW, radial ports, LRL	1
	J030	10-02		672295 (9007314-1010)	Screw, M10	4
	J043	10-02		140644	Plug assembly, LRL	1
	J044	10-02		140644	Plug assembly, LRR	1
	J050	10-02		9004700-1907	Pin	1
	J080	10-02		4570289	Adapter flange, A	1
	J090	10-02		9004100-1550	O-ring	1
	J095	10-02		545434 (9004100-0420)	O-ring	1
	J100	10-02		5000489	Screw, M10	4
	J110	10-02		4460586	Cover plate	1
	J120	10-02		4800482	A pad seal	1
	J130	10-02		9007200-3712	Screw	2
	J140	10-02		1701364	Coupling, 9 tooth	1

Shaft, auxiliary flange and end cap

(C3AR)

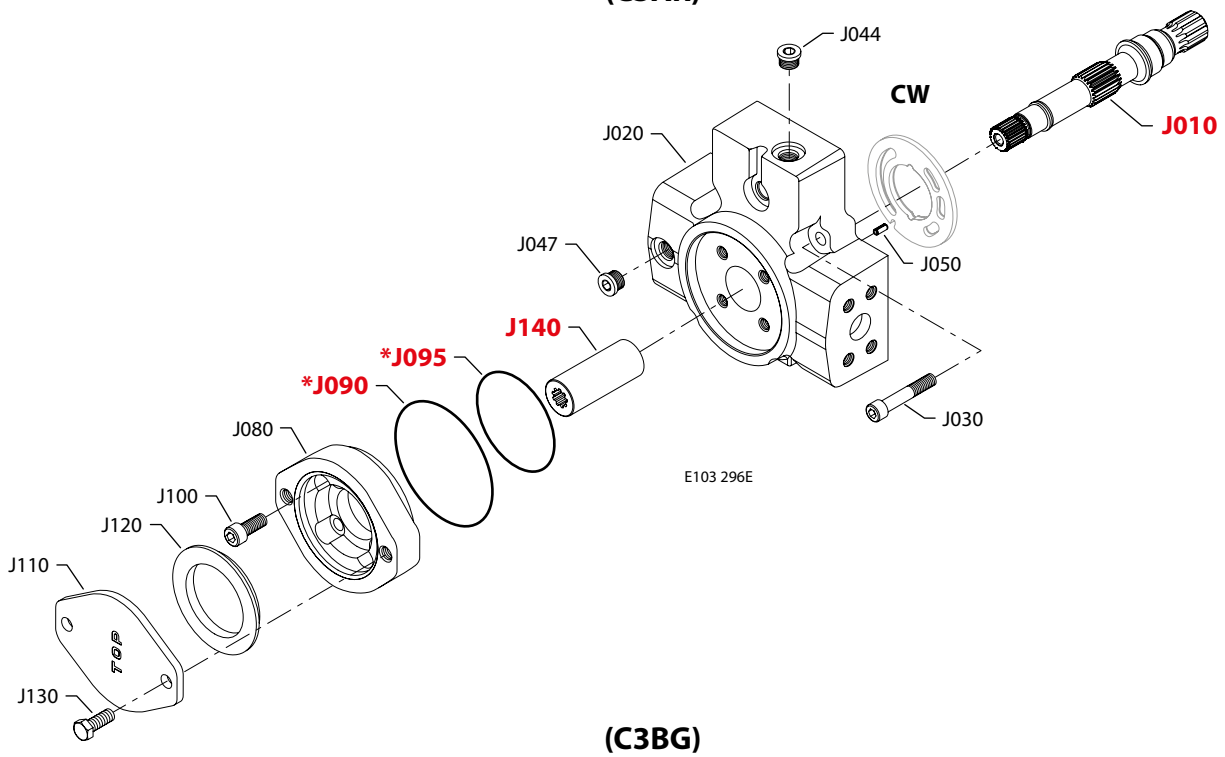

(C3BG)

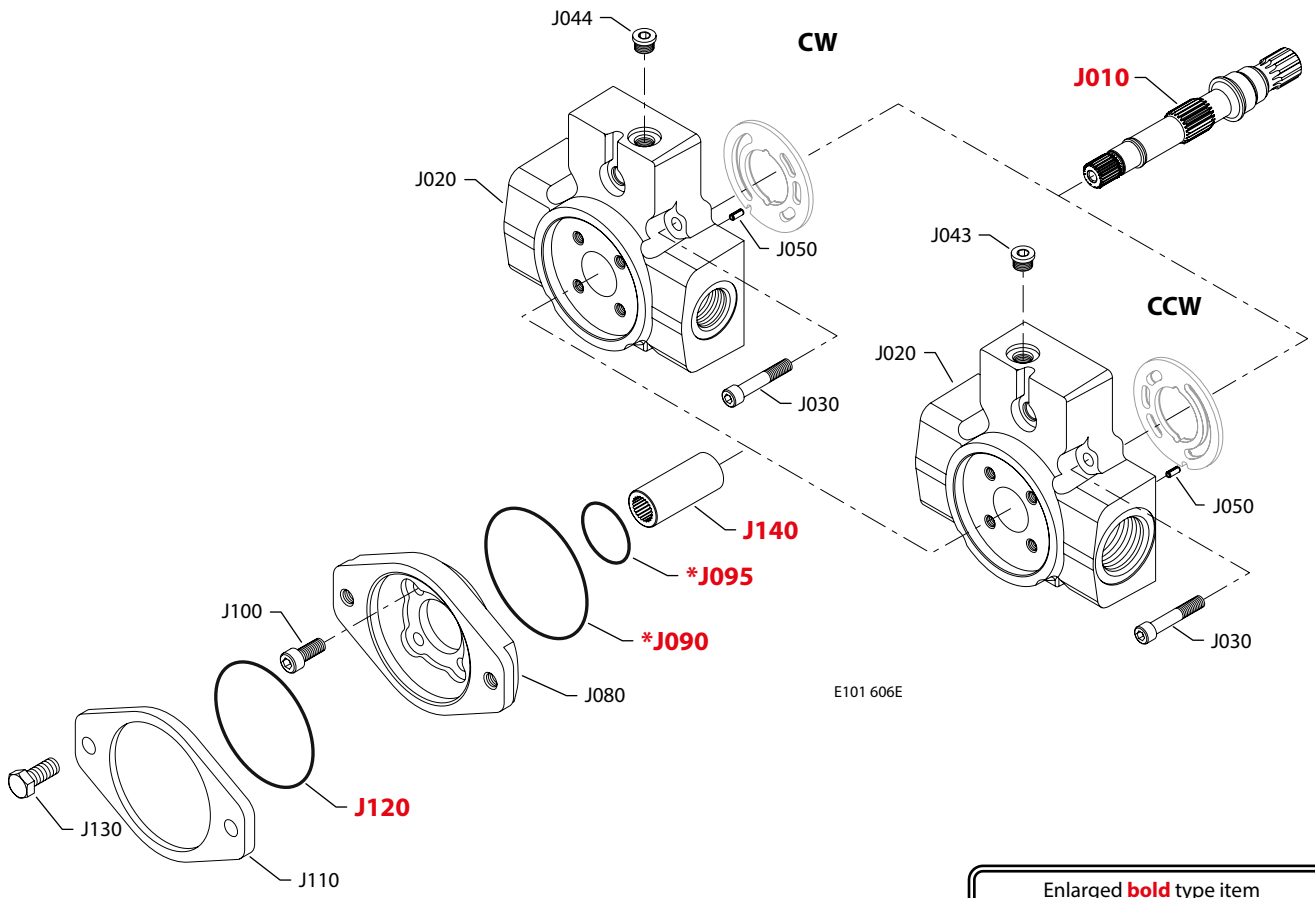

* = included in base motor seal kit Q210

Enlarged **bold** type item numbers are recommended part to stock for servicing.

Shaft, auxiliary flange and end cap

Shaft/auxiliary flange/end cap

Order code	Item	Date begin	Date end	Part number	Part name	Qty. per model/kit
C3AR	J010	11-29		1700313	Shaft, 13 tooth with auxiliary drive	1
	J020	11-29		11079778	End cap, CW, radial ports, LRR	1
	J030	11-29		672295 (9007314-1010)	Screw, M10	4
	J044	11-29		140644	Plug assembly	1
	J047	11-29		140644	Plug assembly	1
	J050	11-29		9004700-1907	Pin	1
	J080	11-29		4570289	Adapter flange, A	1
	J090	11-29		9004100-1550	O-ring	1
	J095	11-29		545434 (9004100-0420)	O-ring	1
	J100	11-29		5000489	Screw, M10	4
	J110	11-29		4460586	Cover plate	1
	J120	11-29		4800482	A pad seal	1
	J130	11-29		9007200-3712	Screw	2
	J140	11-29		1701364	Coupling, 9 tooth	1
C3BG	J010	01-01		1700313	Shaft, 13 tooth with auxiliary drive	1
	J020	01-01		11056184	End cap, CW, radial ports, LRR (SB-2002-042 & SB-2008-064)	1
	J020	01-01		11056189	End cap, CCW, radial ports, LRL (SB-2002-042 & SB-2008-064)	1
	J030	01-01		672295 (9007314-1010)	Screw, M10	4
	J043	01-19		140644	Plug assembly, 9/16-18, LRL	1
	J043	01-01	01-18	5000438	Plug assembly, M14, LRL	1
	J044	01-19		140644	Plug assembly, 9/16-18, LRR	1
	J044	01-01	01-18	5000438	Plug assembly, M14, LRR	1
	J050	01-01		9004700-1907	Pin	1
	J080	01-01		4570210	Adapter flange, B	1
	J090	01-01		9004100-1550	O-ring	1
	J095	01-01		545434 (9004100-0420)	O-ring	1
	J100	01-01		5000489	Screw, M10	4
	J110	01-01		4460370	Cover plate	1
	J120	01-01		9004104-0440	O-ring	1
	J130	01-01		9007200-5021	Screw	2
	J140	01-01		1701365	Coupling, 13 tooth	1

Shaft, auxiliary flange and end cap

(C3EG & C3EV)

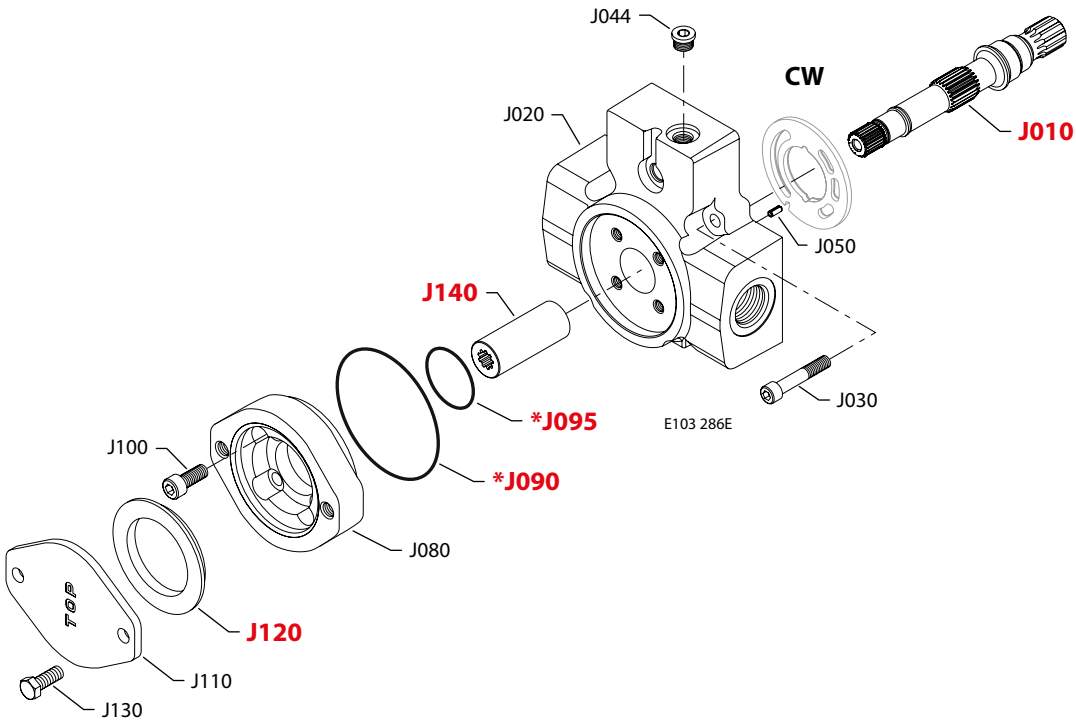

(C3NF)

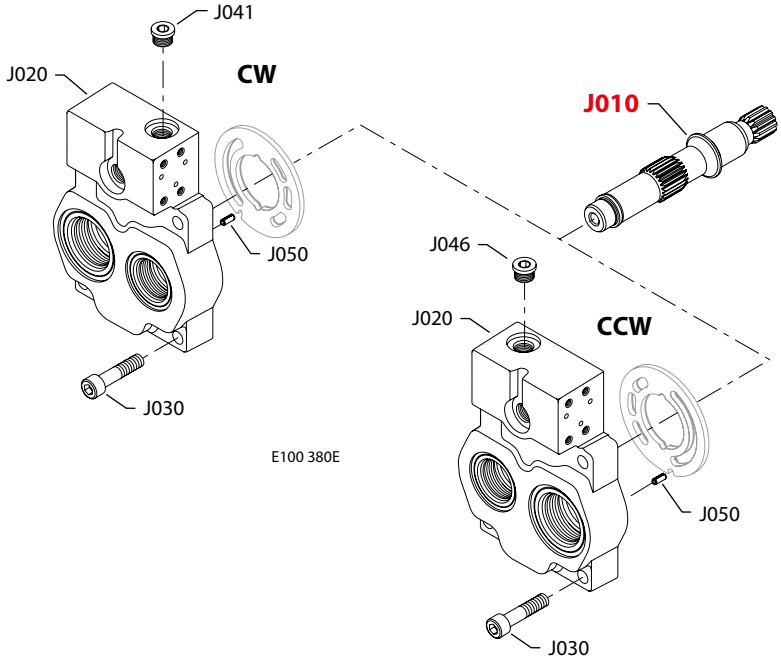

* = included in base motor seal kit Q210

Enlarged **bold** type item numbers are recommended part to stock for servicing.

Shaft, auxiliary flange and end cap

Shaft/auxiliary flange/end cap

Order code	Item	Date begin	Date end	Part number	Part name	Qty. per model/kit
C3EG	J010	05-31		1700313	Shaft, 15 tooth spline with auxiliary drive	1
	J020	05-31		11056184	End cap, CW, radial ports, LRR (SB-2008-064)	1
	J030	05-31		672295 (9007314-1010)	Screw, M10	4
	J044	05-31		140644	Plug assembly	1
	J050	05-31		9004700-1907	Pin	1
	J080	05-31		4570430	Adapter flange, A, metric	1
	J090	05-31		9004100-1550	O-ring	1
	J095	05-31		545434 (9004100-0420)	O-ring	1
	J100	05-31		5000489	Screw, M10	4
	J110	05-31		4460586	Cover plate	1
	J120	05-31		4800482	A pad seal	1
	J130	05-31		5000622	Screw	2
	J140	05-31		1701364	Coupling, 9 tooth	1
C3EV	J010	07-08		1700313	Shaft, 15 tooth spline with auxiliary drive	1
	J020	07-08		11056185	End cap, CW, radial ports, LRR (SB-2008-064)	1
	J030	07-08		672295 (9007314-1010)	Screw, M10	4
	J044	07-08		140644	Plug assembly	1
	J050	07-08		9004700-1907	Pin	1
	J080	07-08		4570430	Adapter flange, A, metric	1
	J090	07-08		9004100-1550	O-ring	1
	J095	07-08		545434 (9004100-0420)	O-ring	1
	J100	07-08		5000489	Screw, M10	4
	J110	07-08		4460586	Cover plate	1
	J120	07-08		4800482	A pad seal	1
	J130	07-08		5000622	Screw, M10	2
	J140	07-08		1701364	Coupling, 9 tooth	1
C3NF	J010	00-50		1700159	Shaft, 15 tooth without auxiliary drive	1
	J020	01-19		11056190	End cap, CW, axial ports, LRR (SB-2002-042 & SB-2008-064)	1
	J020	01-19		11056191	End cap, CCW, axial ports, LRL (SB-2002-042 & SB-2008-064)	1
	J030	00-50		672295 (9007314-1010)	Screw, M10	4
	J041	01-19		140644	Plug assembly, LRR	1
	J041	00-50	01-18	5000438	Plug assembly, M14 KRR	1
	J046	01-19		140644	Plug assembly, LRL	1
	J046	00-50	01-18	5000438	Plug assembly, M14, LRL	1
	J050	00-50		9004700-1907	Pin	1

Shaft, auxiliary flange and end cap

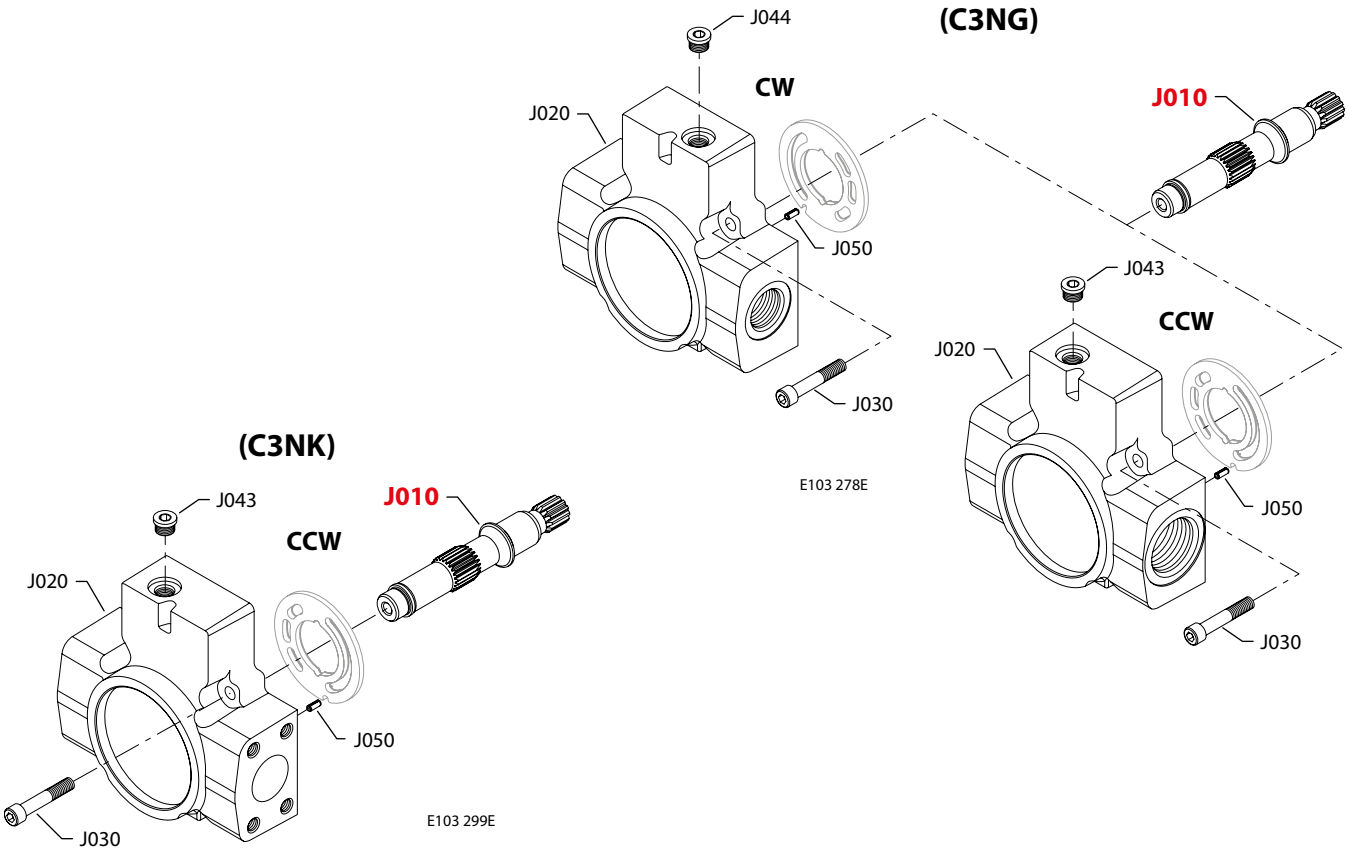

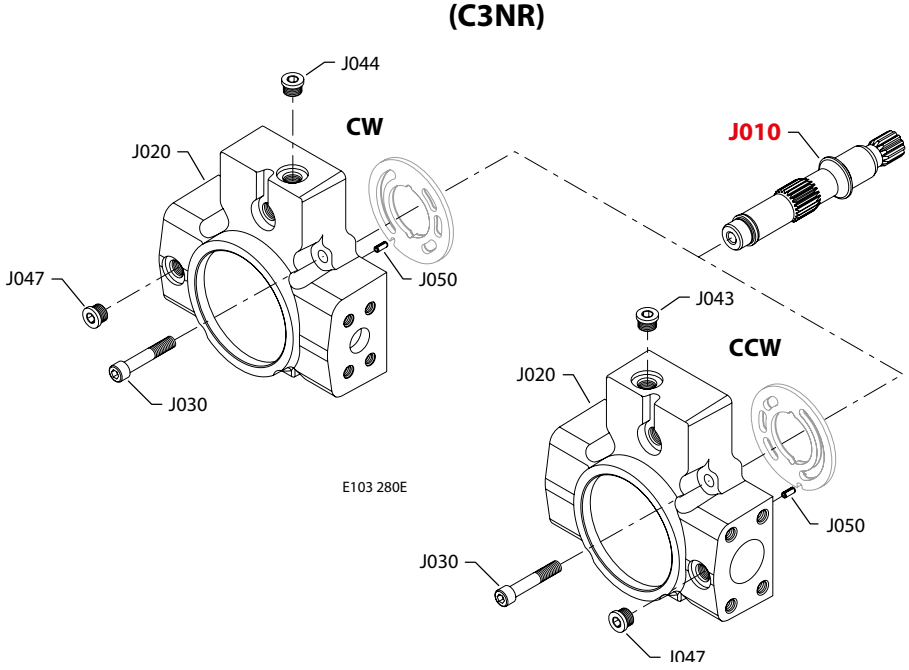

Enlarged **bold** type item numbers are recommended part to stock for servicing.

Shaft, auxiliary flange and end cap

Shaft/auxiliary flange/end cap

Order code	Item	Date begin	Date end	Part number	Part name	Qty. per model/kit
C3NG	J010	00-50		1700159	Shaft, 15 tooth without auxiliary drive	1
	J020	00-50		11056159	End cap, CW, radial ports, LRR (SB-2002-042 & SB-2008-064)	1
	J020	00-50		11056186	End cap, CCW, radial ports, LRL (SB-2002-042 & SB-2008-064)	1
	J030	00-50		672295 (9007314-1010)	Screw, M10	4
	J043	01-19		140644	Plug assembly, 9/16-18, LRL	1
	J043	00-50	01-18	5000438	Plug assembly, M14, LRL	1
	J044	01-19		140644	Plug assembly, 9/16-18, LRR	1
	J044	00-50	01-18	5000438	Plug assembly, M14, LRR	1
	J050	00-50		9004700-1907	Pin	1
C3NK	J010	10-02		1700159	Shaft, 15 tooth without auxiliary drive	1
	J020	10-02		11052895	End cap, CCW, radial ports, LRL	1
	J030	10-02		672295 (9007314-1010)	Screw, M10	4
	J043	10-02		140644	Plug assembly	1
	J050	10-02		9004700-1907	Pin	1
C3NR	J010	11-19		1700159	Shaft, 15 tooth without auxiliary drive	1
	J020	11-19		11101279	End cap, CW, radial ports, LRR	1
	J020	11-19		11071388	End cap, CCW, radial ports, LRL	1
	J030	11-19		672295 (9007314-1010)	Screw, M10	4
	J043	11-19		140644	Plug assembly, LRL	1
	J044	11-19		140644	Plug assembly, LRR	1
	J047	11-19		140644	Plug assembly	1
	J050	11-19		9004700-1907	Pin	1

Shaft, auxiliary flange and end cap

(C3RG)

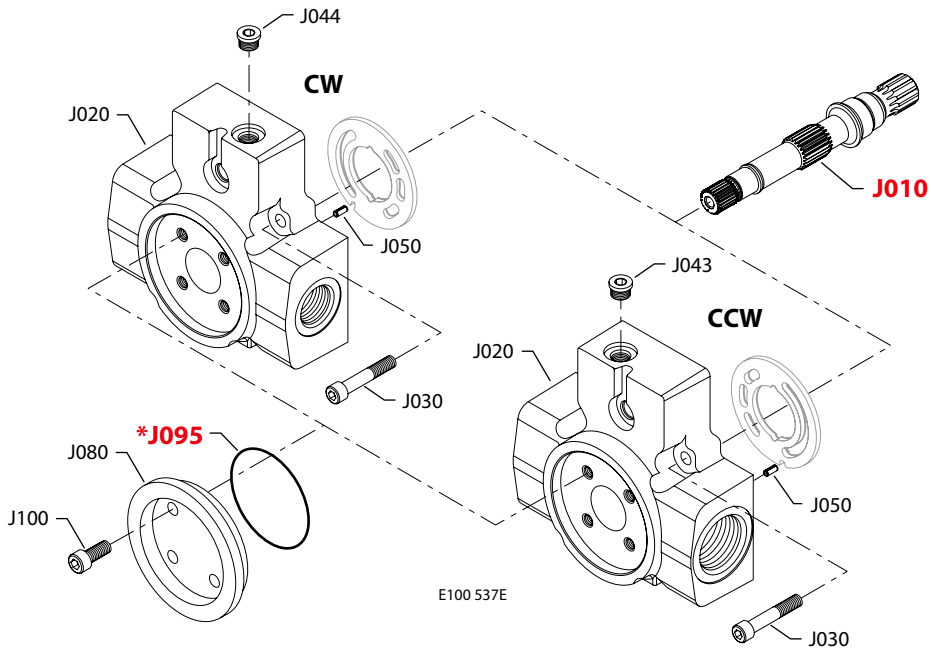

(C3TG)

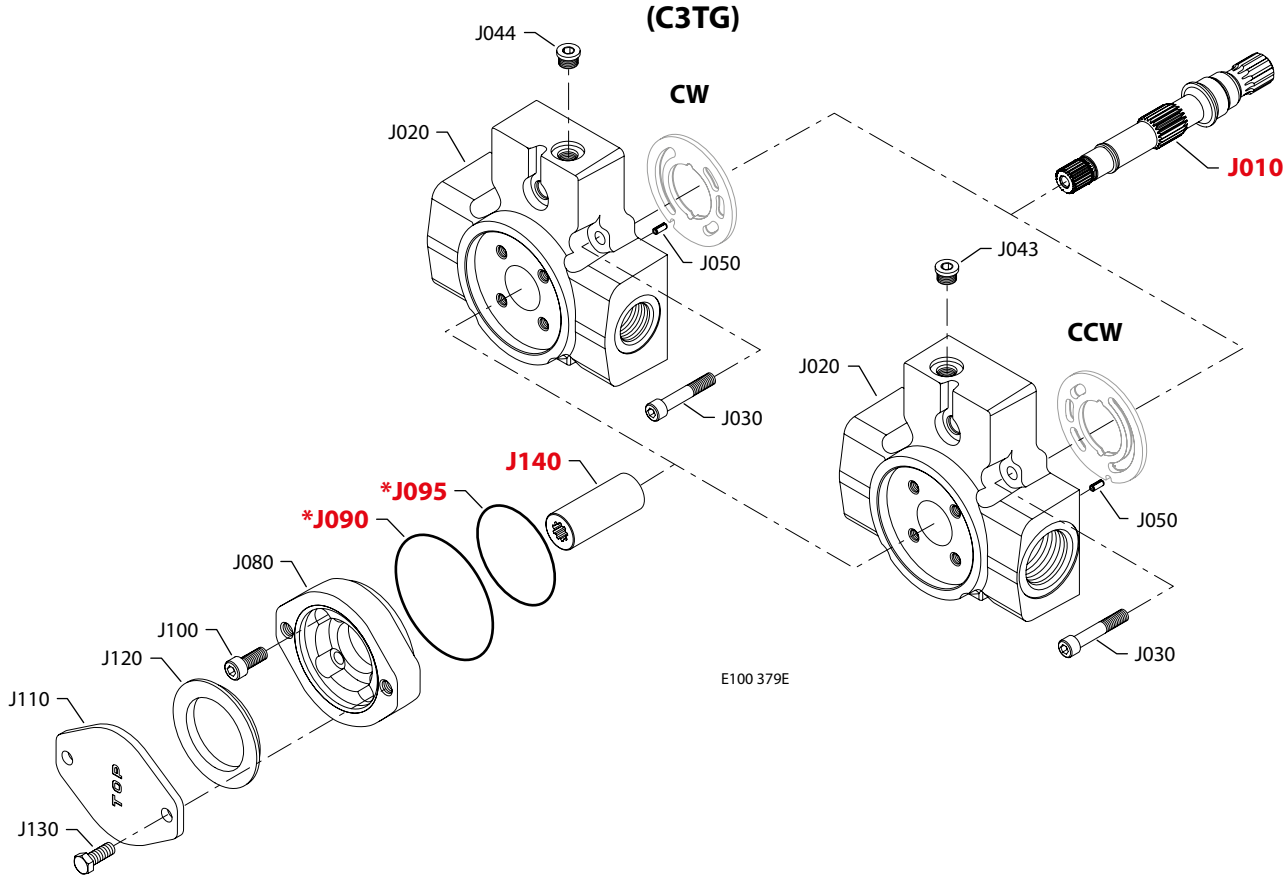

* = included in base motor seal kit Q210

Enlarged **bold** type item numbers are recommended part to stock for servicing.

Shaft, auxiliary flange and end cap

Shaft/auxiliary flange/end cap

Order code	Item	Date begin	Date end	Part number	Part name	Qty. per model/kit
C3RG	J010	01-23		1700313	Shaft, 15 tooth with auxiliary drive	1
	J020	01-23		11056184	End cap, CW, radial ports, LRR (SB-2008-064)	1
	J020	01-23		11056189	End cap, CCW, radial ports, LRL (SB-2008-064)	1
	J030	01-23		672295 (9007314-1010)	Screw, M10	4
	J043	01-23		140644	Plug assembly, LRL	1
	J044	01-23		140644	Plug assembly, LRR	1
	J050	01-23		9004700-1907	Pin	1
	J080	01-23		4570179	Running cover	1
	J090	01-23		9004100-1550	O-ring	1
	J095	01-23		9004104-0310	O-ring	1
	J100	01-23		5000489	Screw, M10	4
C3TG	J010	01-01		1700313	Shaft, 15 tooth with auxiliary drive	1
	J020	01-01		11056184	End cap, CW, radial ports, LRR (SB-2008-064)	1
	J020	01-01		11056189	End cap, CCW, radial ports, LRL (SB-2008-064)	1
	J030	01-01		672295 (9007314-1010)	Screw, M10	4
	J043	01-19		140644	Plug assembly, 9/16-18, LRL	1
	J043	01-01	01-18	5000438	Plug assembly, M14, LRL	1
	J044	01-19		140644	Plug assembly, 9/16-18, LRR	1
	J044	01-01	01-18	5000438	Plug assembly, M14, LRR	1
	J050	01-01		9004700-1907	Pin	1
	J080	01-01		4570289	Adapter flange, A	1
	J090	01-01		9004100-1550	O-ring	1
	J095	01-01		545434 (9004100-0420)	O-ring	1
	J100	01-01		5000489	Screw, M10	4
	J110	01-01		4460586	Cover plate	1
	J120	01-01		4800482	A pad seal	1
	J130	01-01		9007200-3712	Screw	2
	J140	01-01		11017433	Coupling, 11 tooth	1

Shaft, auxiliary flange and end cap

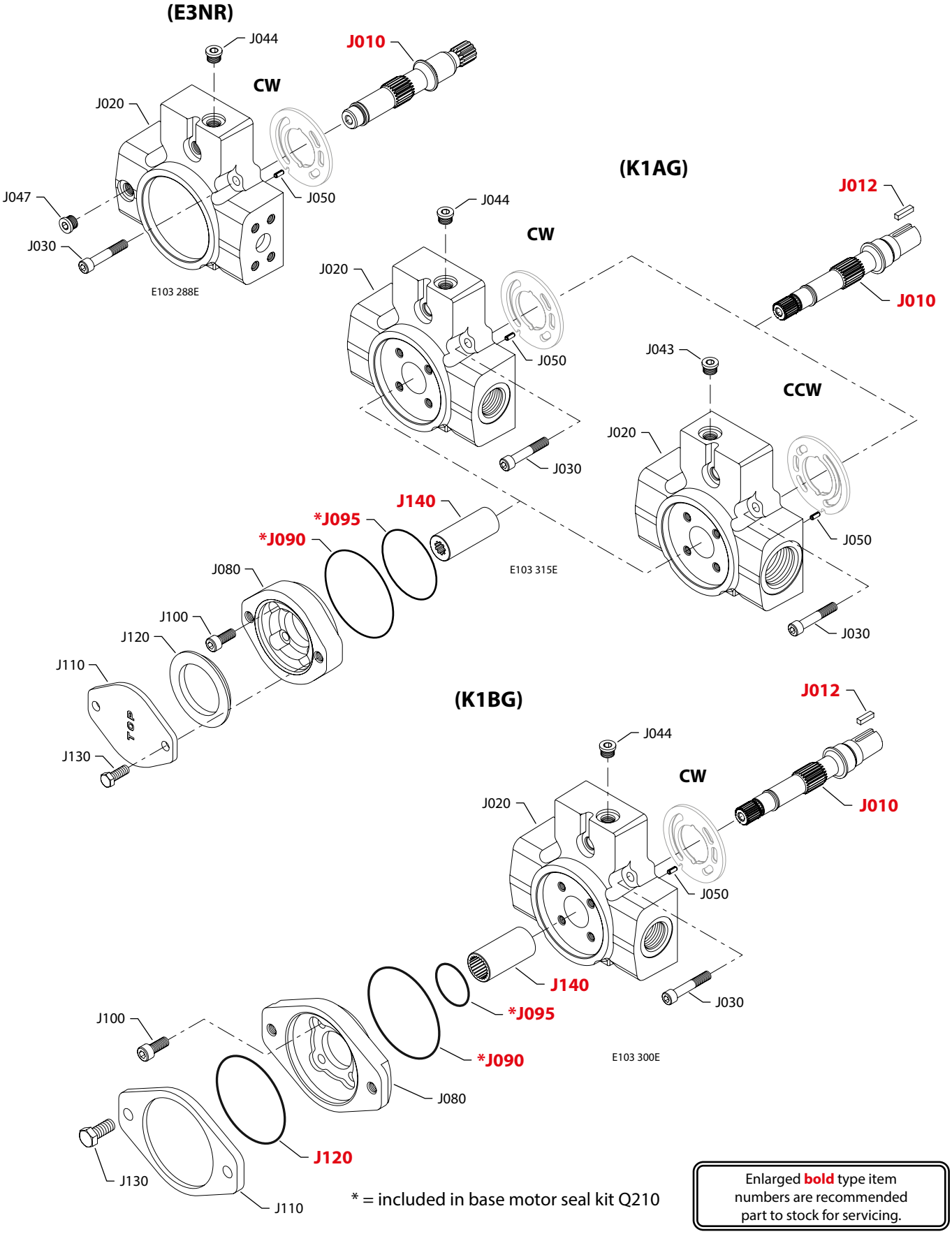

* = included in base motor seal kit Q210

Enlarged **bold** type item numbers are recommended part to stock for servicing.

Shaft, auxiliary flange and end cap

Shaft/auxiliary flange/end cap

Order code	Item	Date begin	Date end	Part number	Part name	Qty. per model/kit
E3NR	J010	10-02		11071240	Shaft, 15 tooth, snap ring groove, without aux. drive	1
	J020	10-02		11071388	End cap, CCW, axial ports, LRL	1
	J030	10-02		672295 (9007314-1010)	Screw, M10	4
	J043	10-02		140644	Plug assembly	1
	J047	10-02		140644	Plug assembly	1
	J050	10-02		9004700-1907	Pin	1
K1AG	J010	01-19		1700458	Shaft, straight key with auxiliary drive	1
	J012	01-19		5000664	Key, 0.25 x 0.75	1
	J020	01-19		11056184	End cap, CW, radial ports, LRR (SB-2008-064)	1
	J020	01-19		11056189	End cap, CCW, radial ports, LRL (SB-2008-064)	1
	J030	01-19		672295 (9007314-1010)	Screw, M10	4
	J043	01-19		140644	Plug assembly, LRL	1
	J044	01-19		140644	Plug assembly, LRR	1
	J050	01-19		9004700-1907	Pin	1
	J080	01-19		4570289	Adapter flange, A	1
	J090	01-19		9004100-1550	O-ring	1
	J095	01-19		545434 (9004100-0420)	O-ring	1
	J100	01-19		5000489	Screw, M10	4
	J110	01-19		4460586	Cover plate	1
	J120	01-19		4800482	A pad seal	1
	J130	01-19		9007200-3712	Screw	2
	J140	01-19		1701364	Coupling, 9 tooth	1
K1BG	J010	12-07		1700458	Shaft, straight key, without auxiliary drive	1
	J012	12-07		5000664	Key, 0.25 x 0.75	1
	J020	12-07		11056184	End cap, CW, axial ports, LRR (SB-2008-064)	1
	J030	12-07		672295 (9007314-1010)	Screw, M10	4
	J044	12-07		140644	Plug, LRR	1
	J050	12-07		9004700-1907	Pin	1
	J080	12-07		4570210	Adapter flange, A	1
	J090	12-07		9004100-1550	O-ring	1
	J095	12-07		545434 (9004100-0420)	O-ring	1
	J100	12-07		5000489	Screw, M10	4
	J110	12-07		4460370	Cover plate	1
	J120	12-07		9004104-0440	O-ring	1
	J130	12-07		9007200-5021	Screw	2
	J140	12-07		1701365	Coupling, 13 tooth	1

Shaft, auxiliary flange and end cap

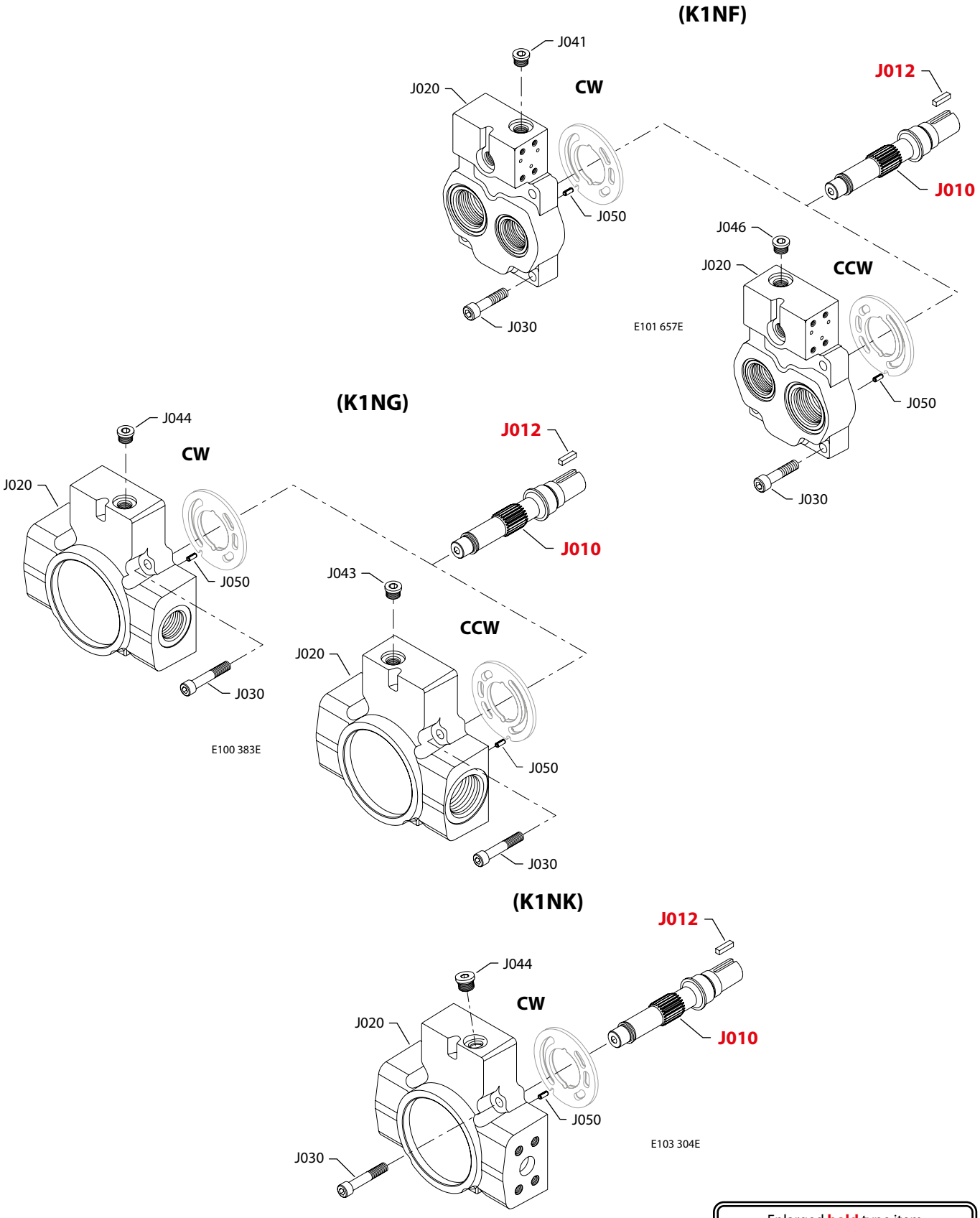

Enlarged **bold** type item numbers are recommended part to stock for servicing.

Shaft, auxiliary flange and end cap

Shaft/auxiliary flange/end cap

Order code	Item	Date begin	Date end	Part number	Part name	Qty. per model/kit
K1NF	J010	01-14		1700396	Shaft, straight key, without auxiliary drive	1
	J012	01-14		5000664	Key, 0.25 x 0.75	1
	J020	01-14		11056190	End cap, CW, axial ports, LRR (SB-2008-064)	1
	J020	01-14		11056191	End cap, CCW, axial ports, LRL (SB-2008-064)	1
	J030	01-14		672295 (9007314-1010)	Screw, M10	4
	J041	01-19		140644	Plug assembly, 9/16-18, LRR	1
	J041	01-14	01-18	5000438	Plug assembly, M14, LRR	1
	J046	01-19		140644	Plug assembly, 9/16-18, LRL	1
	J046	01-14	01-18	5000438	Plug assembly, M14, LRL	1
	J050	01-14		9004700-1907	Pin	1
K1NG	J010	02-34		1700396	Shaft, straight key, without auxiliary drive	1
	J012	02-34		5000664	Key, 0.25 x 0.75	1
	J020	02-34		11056159	End cap, CW, radial ports, LRR (SB-2008-064)	1
	J020	02-34		11056186	End cap, CCW, radial ports, LRL (SB-2008-064)	1
	J030	02-34		672295 (9007314-1010)	Screw, M10	4
	J043	02-34		140644	Plug assembly, LRL	1
	J044	02-34		140644	Plug assembly, LRR	1
	J050	02-34		9004700-1907	Pin	1
K1NK	J010	02-48		1700396	Shaft, straight key, without auxiliary drive	1
	J012	02-48		5000664	Key, 0.25 x 0.75	1
	J020	02-48		11070045	End cap, CW, axial ports, LRR (SB-2008-064)	1
	J030	02-48		672295 (9007314-1010)	Screw, M10	4
	J044	10-37		140644	Plug assembly, 9/16-18	1
	J044	02-48	10-36	5000438	Plug assembly, M14	1
	J050	02-48		9004700-1907	Pin	1

Shaft, auxiliary flange and end cap

(K1RG)

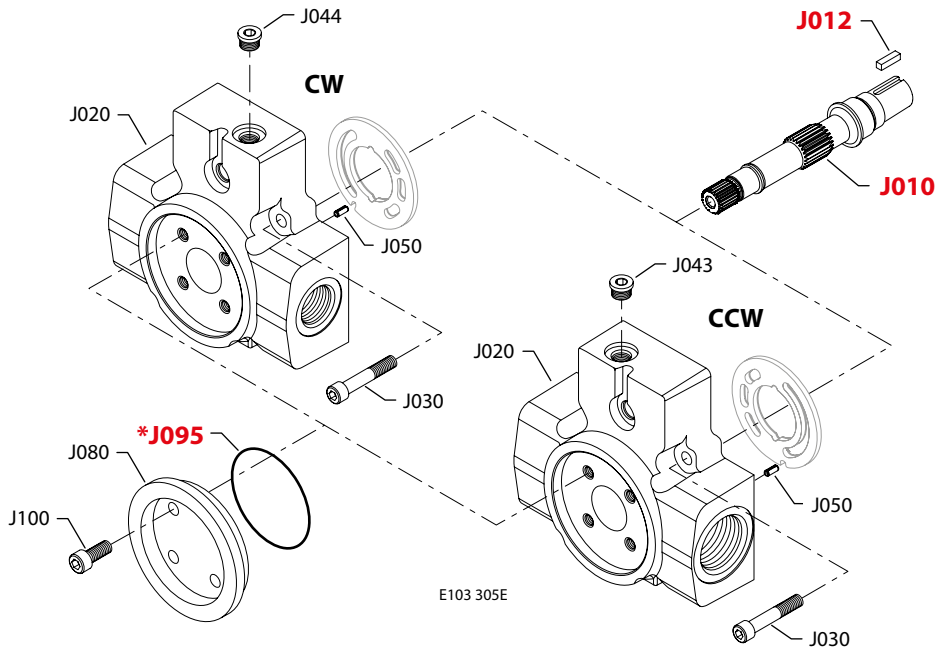

(K1TG)

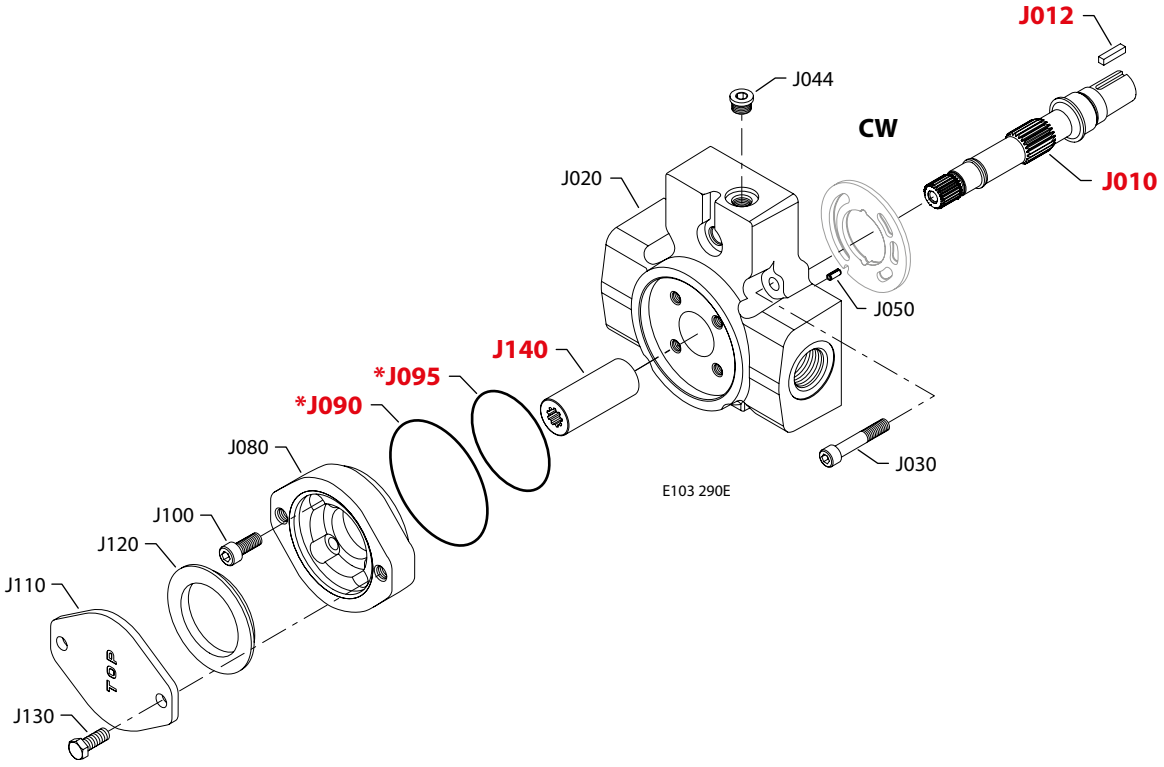

* = included in base motor seal kit Q210

Enlarged **bold** type item numbers are recommended part to stock for servicing.

Shaft, auxiliary flange and end cap

Shaft/auxiliary flange/end cap

Order code	Item	Date begin	Date end	Part number	Part name	Qty. per model/kit
K1RG	J010	10-02		1700458	Shaft, straight key, with auxiliary drive	1
	J012	10-02		5000664	Key, 0.25 x 0.75	1
	J020	10-02		11056184	End cap, CW, radial ports, LRR	1
	J020	10-02		11056189	End cap, CCW, radial ports, LRL	1
	J030	10-02		672295 (9007314-1010)	Screw, M10	4
	J043	10-02		140644	Plug assembly, LRL	1
	J044	10-02		140644	Plug assembly, LRR	1
	J050	10-02		9004700-1907	Pin	1
	J080	10-02		4570179	Running cover	1
	J090	10-02		9004100-1550	O-ring	1
	J095	10-02		9004104-0310	O-ring	1
	J100	10-02		5000489	Screw, M10	4
K1TG	J010	11-03		1700458	Shaft, straight key with auxiliary drive	1
	J012	11-03		5000664	Key, 0.25 x 0.75	1
	J020	11-03		11056184	End cap, CW, radial ports, LRR (SB-2008-064)	1
	J030	11-03		672295 (9007314-1010)	Screw, M10	4
	J044	11-03		140644	Plug assembly	1
	J050	11-03		9004700-1907	Pin	1
	J080	11-03		4570289	Adapter flange, A	1
	J090	11-03		9004100-1550	O-ring	1
	J095	11-03		545434 (9004100-0420)	O-ring	1
	J100	11-03		5000489	Screw, M10	4
	J110	11-03		4460586	Cover plate	1
	J120	11-03		4800482	A pad seal	1
	J130	11-03		9007200-3712	Screw	2
	J140	11-03		11017433	Coupling, 11 tooth	1

Shaft, auxiliary flange and end cap

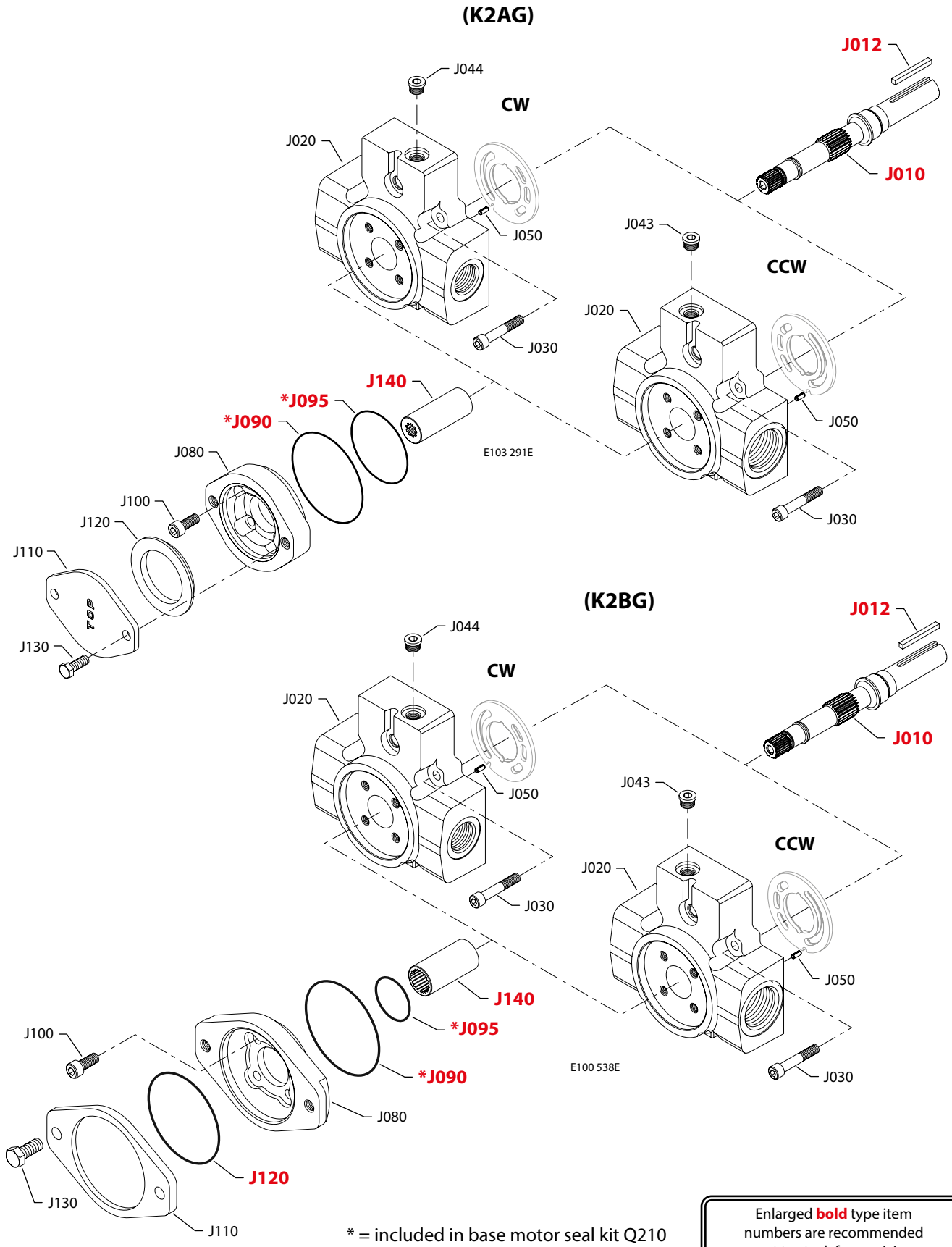

* = included in base motor seal kit Q210

Enlarged **bold** type item numbers are recommended part to stock for servicing.

Shaft, auxiliary flange and end cap

Shaft/auxiliary flange/end cap

Order code	Item	Date begin	Date end	Part number	Part name	Qty. per model/kit
K2AG	J010	01-50		1700572	Shaft, straight key, with auxiliary drive	1
	J012	01-50		9003261-2524	Key, 0.25 x 1.50	1
	J020	01-50		11056184	End cap, CW, radial ports, LRR (SB-2008-064)	1
	J020	01-50		11056189	End cap, CCW, radial ports, LRL (SB-2008-064)	1
	J030	01-50		672295 (9007314-1010)	Screw, M10	4
	J043	01-50		140644	Plug assembly, LRL	1
	J044	01-50		140644	Plug assembly, LRR	1
	J050	01-50		9004700-1907	Pin	1
	J080	01-50		4570289	Adapter flange, A	1
	J090	01-50		9004100-1550	O-ring	1
	J095	01-50		545434 (9004100-0420)	O-ring	1
	J100	01-50		5000489	Screw, M10	4
	J110	01-50		4460586	Cover plate	1
	J120	01-50		4800482	A pad seal	1
	J130	01-50		9007200-3712	Screw	2
	J140	01-50		1701364	Coupling, 9 tooth	1
K2BG	J010	01-50		1700572	Shaft, straight key, with auxiliary drive	1
	J012	01-50		9003261-2524	Key, 0.25 x 1.50	1
	J020	01-50		11056184	End cap, CW, radial ports, LRR (SB-2008-064)	1
	J020	01-50		11056189	End cap, CCW, radial ports, LRL (SB-2008-064)	1
	J030	01-50		672295 (9007314-1010)	Screw, M10	4
	J043	01-50		140644	Plug assembly, LRL	1
	J044	01-50		140644	Plug assembly, LRR	1
	J050	01-50		9004700-1907	Pin	1
	J080	01-50		4570210	Adapter flange, B	1
	J090	01-50		9004100-1550	O-ring	1
	J095	01-50		545434 (9004100-0420)	O-ring	1
	J100	01-50		5000489	Screw, M10	4
	J110	01-50		4460370	Cover plate	1
	J120	01-50		9004104-0440	O-ring	1
	J130	01-50		9007200-5021	Screw	2
	J140	01-50		1701365	Coupling, 13 tooth	1

Shaft, auxiliary flange and end cap

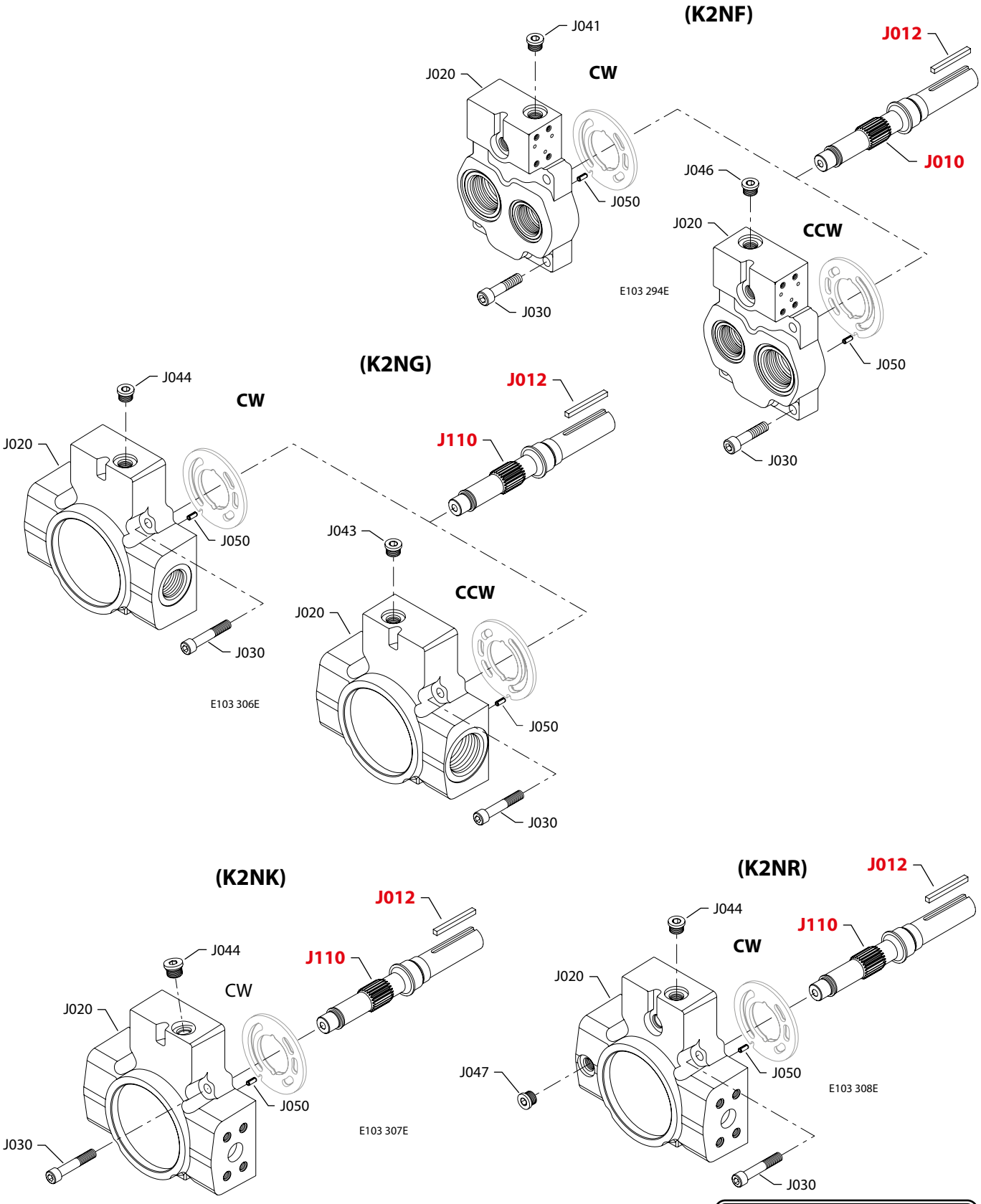

Enlarged **bold** type item numbers are recommended part to stock for servicing.

Shaft, auxiliary flange and end cap

Shaft/auxiliary flange/end cap

Order code	Item	Date begin	Date end	Part number	Part name	Qty. per model/kit
K2NF	J010	01-50		1700571	Shaft, straight key, without auxiliary drive	1
	J012	01-50		9003261-2524	Key, 0.25 x 1.50	1
	J020	01-50		11056190	End cap, CW, axial ports, LRR (SB-2008-064)	1
	J020	01-50		11056191	End cap, CCW, axial ports, LRL (SB-2008-064)	1
	J030	01-50		672295 (9007314-1010)	Screw, M10	4
	J041	01-50		140644	Plug assembly, LRR	1
	J046	01-50		140644	Plug assembly, LRL	1
	J050	01-50		9004700-1907	Pin	1
K2NG	J010	01-50		1700571	Shaft, straight key, without auxiliary drive	1
	J012	01-50		9003261-2524	Key, 0.25 x 1.50	1
	J020	01-50		11056159	End cap, CW, radial ports, LRR (SB-2008-064)	1
	J020	01-50		11056186	End cap, CCW, radial ports, LRL (SB-2008-064)	1
	J030	01-50		672295 (9007314-1010)	Screw, M10	4
	J043	01-50		140644	Plug assembly, LRL	1
	J044	01-50		140644	Plug assembly, LRR	1
	J050	01-50		9004700-1907	Pin	1
K2NK	J010	11-47		1700571	Shaft, straight key, without auxiliary drive	1
	J012	11-47		9003261-2524	Key, 0.25 x 1.50	1
	J020	11-47		11070045	End cap, CW, radial ports, LRR (SB-2008-064)	1
	J030	11-47		672295 (9007314-1010)	Screw, M10	4
	J044	11-47		140644	Plug assembly	1
	J050	11-47		9004700-1907	Pin	1
K2NR	J010	11-29		1700571	Shaft, straight key, without auxiliary drive	1
	J012	11-29		9003261-2524	Key, 0.25 x 1.50	1
	J020	11-29		11101279	End cap, CW, radial ports, LRR (SB-2008-064)	1
	J030	11-29		672295 (9007314-1010)	Screw, M10	4
	J044	11-29		140644	Plug assembly	1
	J047	11-29		140644	Plug assembly	1
	J050	11-29		9004700-1907	Pin	1

Shaft, auxiliary flange and end cap

(K2RG)

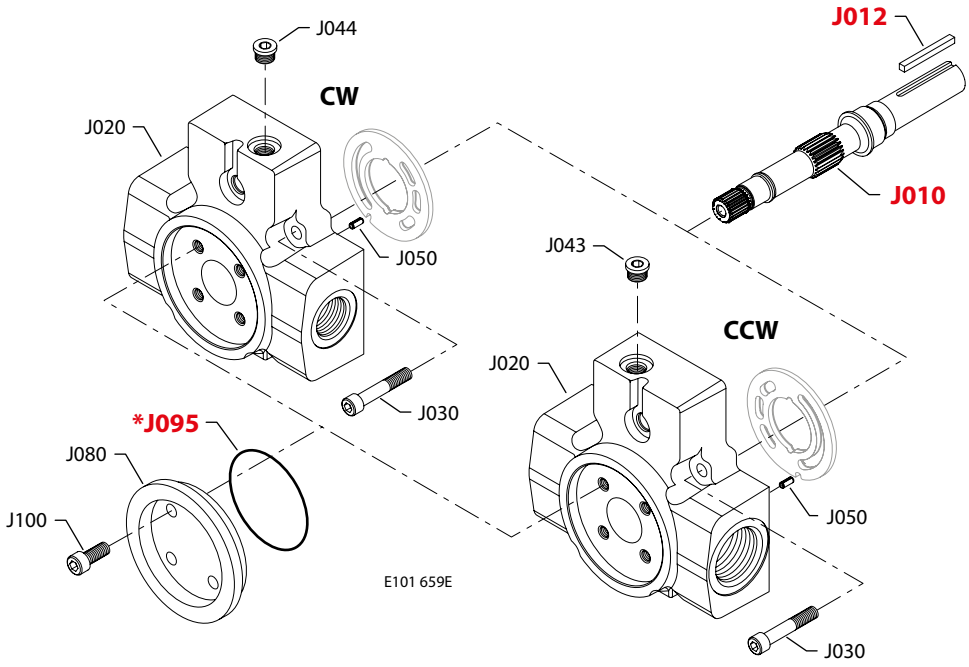

(K2TG)

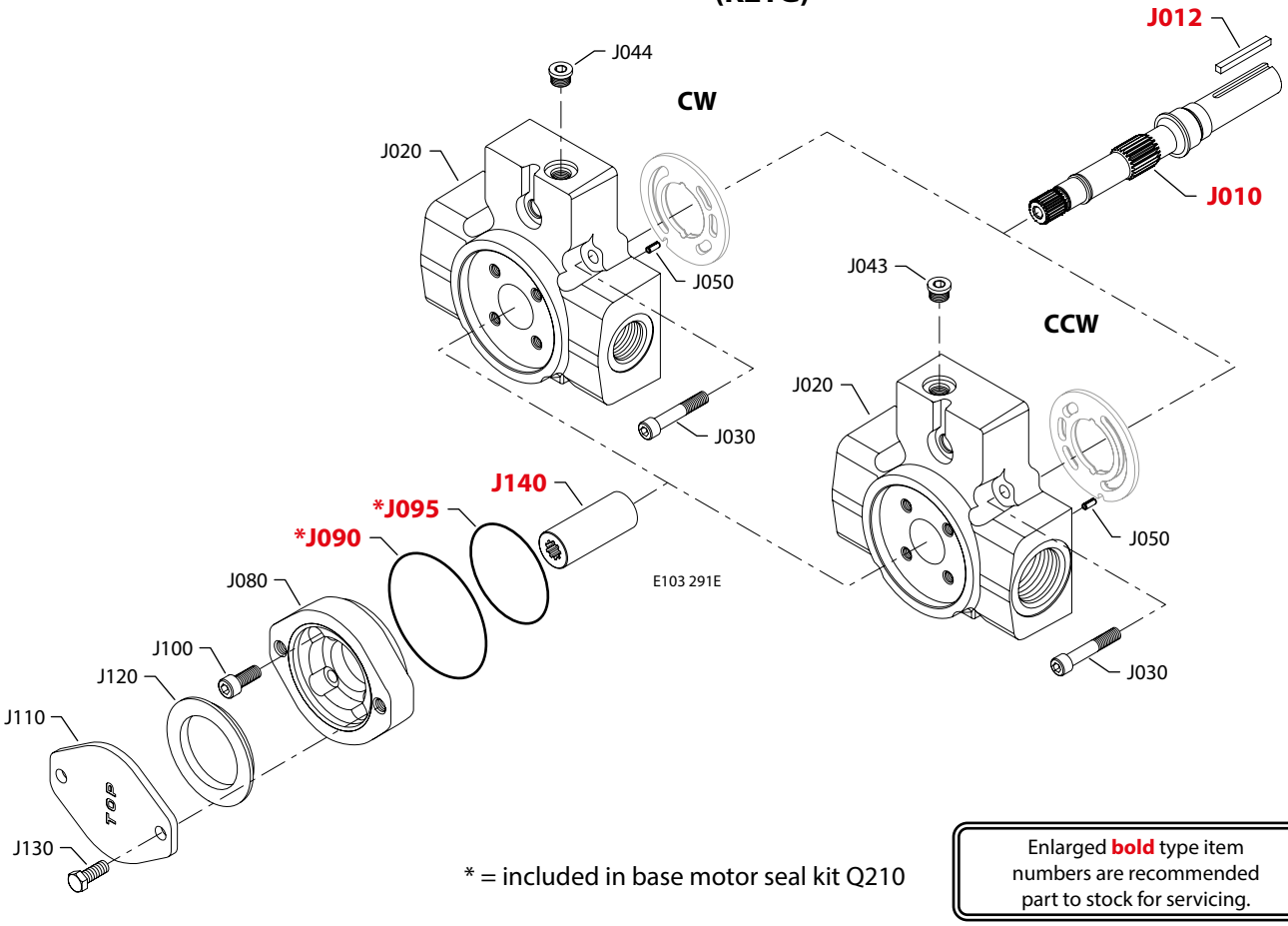

* = included in base motor seal kit Q210

Enlarged **bold** type item numbers are recommended part to stock for servicing.

Shaft, auxiliary flange and end cap

Shaft/auxiliary flange/end cap

Order code	Item	Date begin	Date end	Part number	Part name	Qty. per model/kit
K2RG	J010	06-36		1700572	Shaft, straight key, with auxiliary drive	1
	J012	06-36		9003261-2524	Key, 0.25 x 1.50	1
	J020	06-36		11056184	End cap, CW, radial ports, LRR	1
	J020	06-36		11056189	End cap, CCW, radial ports, LRL	1
	J030	06-36		672295 (9007314-1010)	Screw, M10	4
	J043	06-36		140644	Plug assembly, LRL	1
	J044	06-36		140644	Plug assembly, LRR	1
	J050	06-36		9004700-1907	Pin	1
	J080	06-36		4570179	Running cover	1
	J090	06-36		9004100-1550	O-ring	1
	J095	06-36		9004104-0310	O-ring	1
	J100	06-36		5000489	Screw, M10	4
K2TG	J010	12-24		1700572	Shaft, straight key, with auxiliary drive	1
	J012	12-24		9003261-2524	Key, 0.25 x 1.50	1
	J020	12-24		11056184	End cap, CW, radial ports, LRR	1
	J020	12-24		11056189	End cap, CCW, radial ports, LRL	1
	J030	12-24		672295 (9007314-1010)	Screw, M10	4
	J043	12-24		140644	Plug assembly, LRL	1
	J044	12-24		140644	Plug assembly, LRR	1
	J050	12-24		9004700-1907	Pin	1
	J080	12-24		4570289	Adapter flange, A	1
	J090	12-24		9004100-1550	O-ring	1
	J095	12-24		545434 (9004100-0420)	O-ring	1
	J100	12-24		5000489	Screw, M10	4
	J110	12-24		4460586	Cover plate	1
	J120	12-24		4800482	A pad seal	1
	J130	12-24		9007200-3712	Screw	2
	J140	12-24		11017433	Coupling, 11 tooth	1

Shaft, auxiliary flange and end cap

(R1RG)

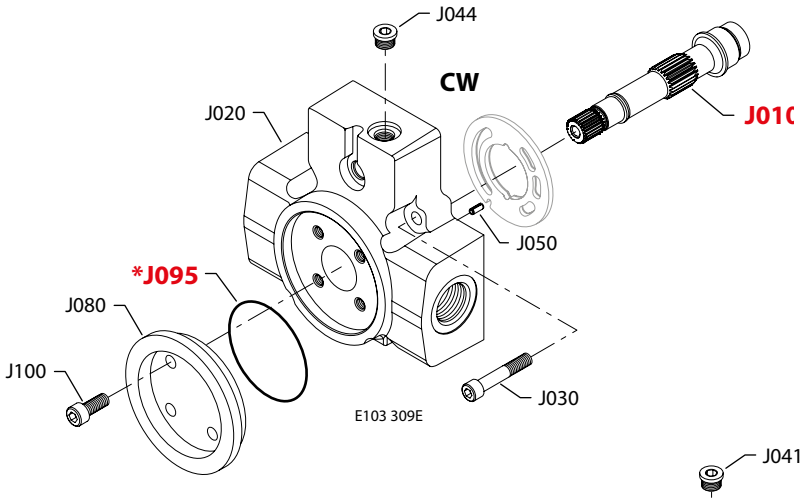

(T1NF)

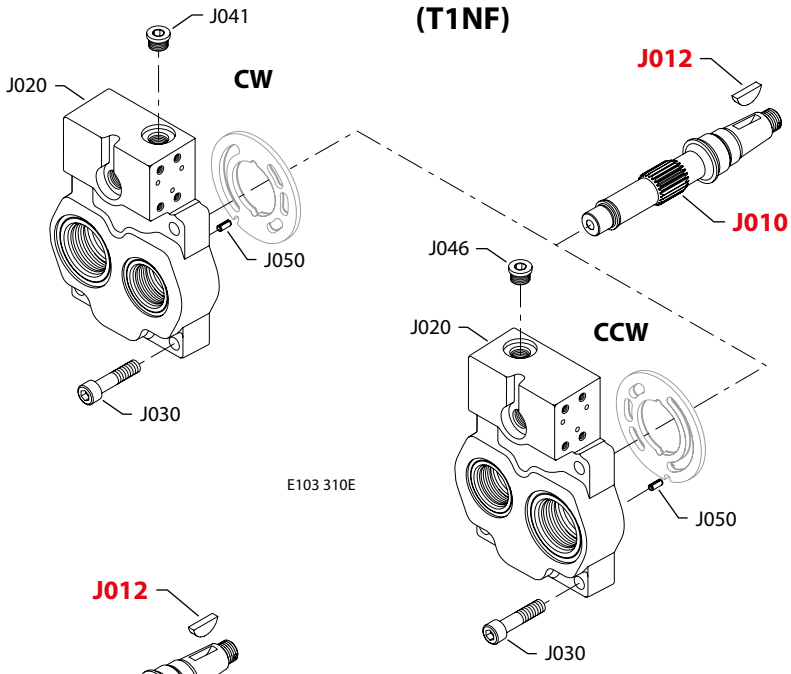

(T1NG)

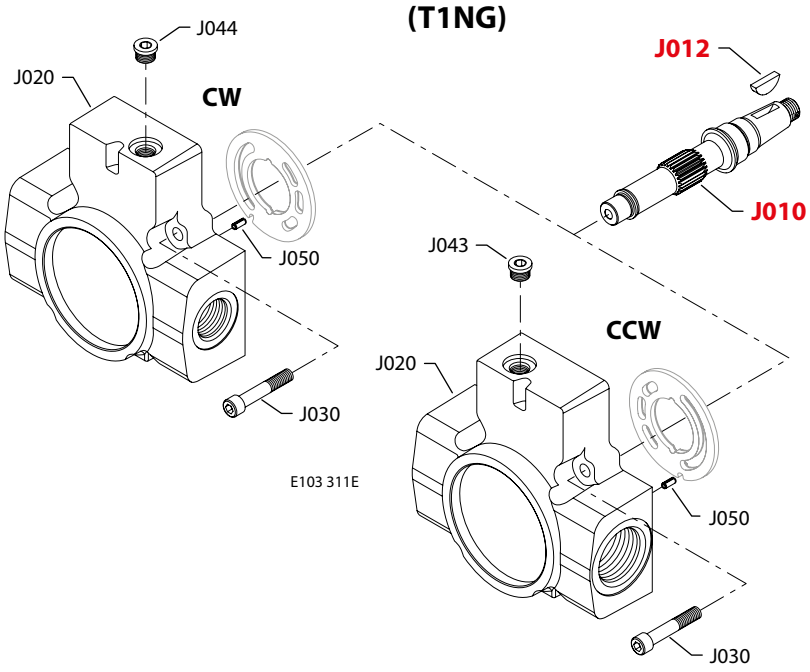

* = included in base motor seal kit Q210

Enlarged **bold** type item numbers are recommended part to stock for servicing.

Shaft, auxiliary flange and end cap

Shaft/auxiliary flange/end cap

Order code	Item	Date begin	Date end	Part number	Part name	Qty. per model/kit
R1RG	J010	03-41		11086810	Shaft, with auxiliary drive only	1
	J020	03-41		11056184	End cap, CW, radial ports, LRR	1
	J030	03-41		672295 (9007314-1010)	Screw, M10	4
	J044	03-41		140644	Plug assembly	1
	J050	03-41		9004700-1907	Pin	1
	J080	03-41		4570179	Running cover	1
	J090	03-41		9004100-1550	O-ring	1
	J095	03-41		9004104-0310	O-ring	1
	J100	03-41		5000489	Screw, M10	4
T1NF	J010	00-45		1700312	Shaft, tapered, without auxiliary drive	1
	J012	00-45		9003310-2514	Key	1
	J020	00-45		11056190	End cap, CW, axial ports, LRR (SB-2002-042 & SB-2008-064)	1
	J020	00-45		11056191	End cap, CCW, axial ports, LRL (SB-2002-042 & SB-2008-064)	1
	J030	00-45		672295 (9007314-1010)	Screw, M10	4
	J041	01-19		140644	Plug assembly, 9/16-18, LRR	1
	J041	00-45	01-18	5000438	Plug assembly, M14, LRR	1
	J046	01-19		140644	Plug assembly, 9/16-18, LRL	1
	J046	00-45	01-18	5000438	Plug assembly, M14, LRL	1
	J050	00-45		9004700-1907	Pin	1
T1NG	J010	00-50		1700312	Shaft, tapered, without auxiliary drive	1
	J012	00-50		9003310-2514	Key	1
	J020	01-19		11056159	End cap, CW, radial ports, LRR (SB-2002-042 & SB-2008-064)	1
	J020	01-19		11056186	End cap, CCW, radial ports, LRL (SB-2002-042 & SB-2008-064)	1
	J030	00-50		672295 (9007314-1010)	Screw, M10	4
	J043	01-19		140644	Plug assembly, 9/16-18, LRL	1
	J043	00-50	01-18	5000438	Plug assembly, M14, LRL	1
	J044	01-19		140644	Plug assembly, 9/16-18, LRR	1
	J044	00-50	01-18	5000438	Plug assembly, M14, LRR	1
	J050	00-50		9004700-1907	Pin	1

Shaft, auxiliary flange and end cap

(T1NP)

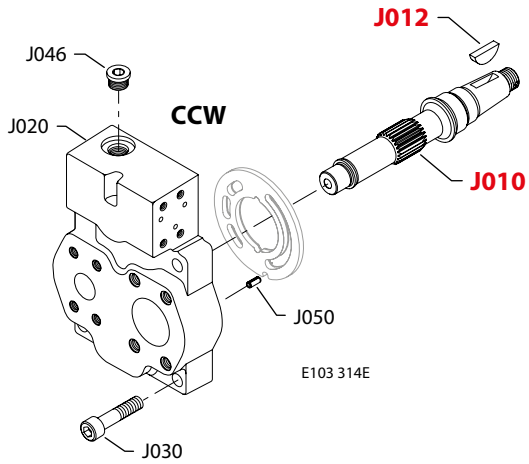

(T1RG)

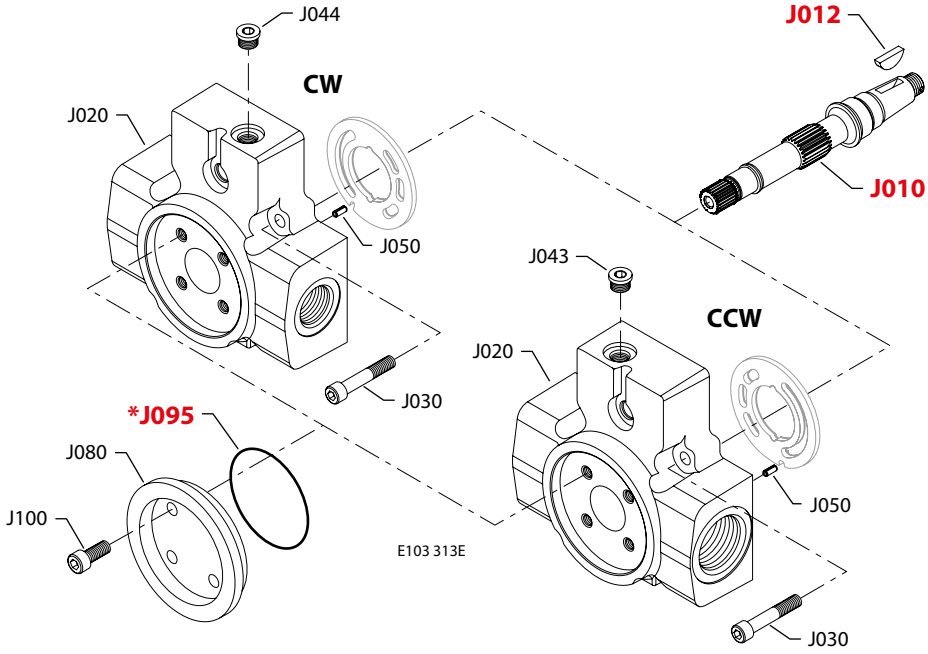

* = included in base motor seal kit Q210

Enlarged **bold** type item numbers are recommended part to stock for servicing.

Shaft, auxiliary flange and end cap

Shaft/auxiliary flange/end cap

Order code	Item	Date begin	Date end	Part number	Part name	Qty. per model/kit
T1NP	J010	00-50		1700312	Shaft, tapered, without auxiliary drive	1
	J012	00-50		9003310-2514	Key	1
	J020	00-50		11056192	End cap, CCW, radial ports, LRL (SB-2002-042 & SB-2008-064)	1
	J030	00-50		672295 (9007314-1010)	Screw, M10	4
	J046	00-50		5000438	Plug assembly, M14	1
	J050	00-50		9004700-1907	Pin	1
T1RG	J010	07-33		11016481	Shaft, tapered, with auxiliary drive	1
	J012	07-33		9003310-2514	Key	1
	J020	07-33		11056184	End cap, CW, radial ports, LRR (SB-2008-064)	1
	J020	07-33		11056189	End cap, CCW, radial ports, LRL (SB-2008-064)	1
	J030	07-33		672295 (9007314-1010)	Screw, M10	4
	J043	07-33		140644	Plug assembly, LRL	1
	J044	07-33		140644	Plug assembly, LRR	1
	J050	07-33		9004700-1907	Pin	1
	J080	07-33		4570179	Running cover	1
	J090	07-33		9004100-1550	O-ring	1
	J095	07-33		9004104-0310	O-ring	1
	J100	07-33		5000489	Screw, M10	4

Shaft, auxiliary flange and end cap

(T1TG)

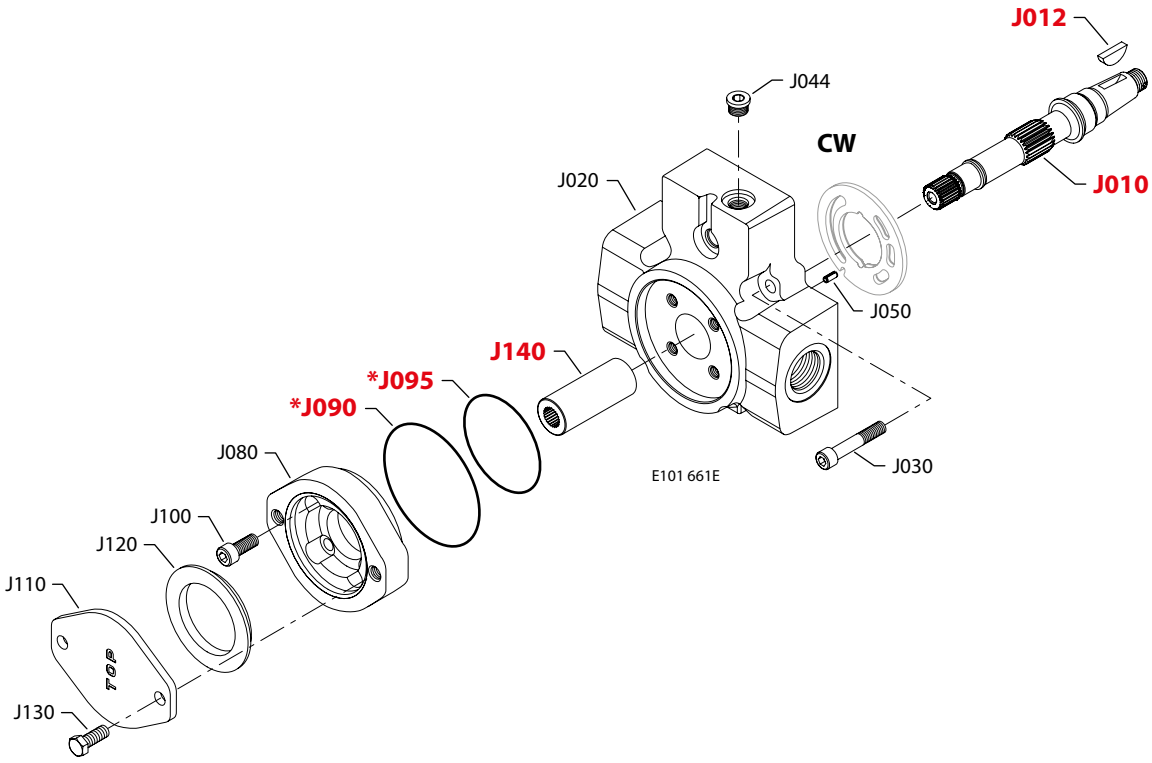

(T2NC)

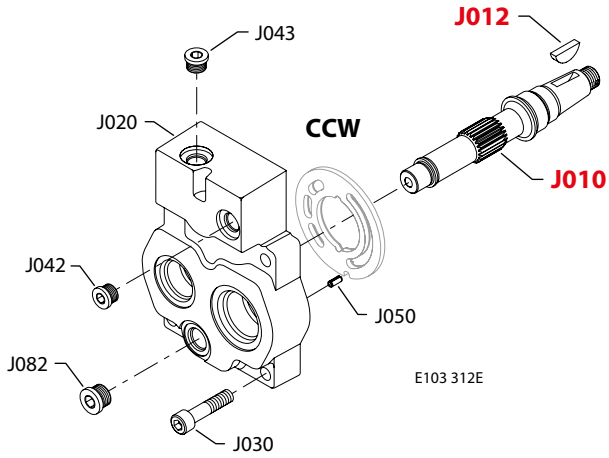

* = included in base motor seal kit Q210

Enlarged **bold** type item numbers are recommended part to stock for servicing.

Shaft, auxiliary flange and end cap

Shaft/auxiliary flange/end cap

Order code	Item	Date begin	Date end	Part number	Part name	Qty. per model/kit
T1TG	J010	03-21		11016481	Shaft, tapered, with auxiliary drive	1
	J012	03-21		9003310-2514	Key	1
	J020	03-21		11056184	End cap, CW, radial ports, LRR (SB-2008-064)	1
	J030	03-21		672295 (9007314-1010)	Screw, M10	4
	J044	03-21		140644	Plug assembly, LRR	1
	J050	03-21		9004700-1907	Pin	1
	J080	03-21		4570289	Adapter flange, A	1
	J090	03-21		9004100-1550	O-ring	1
	J095	03-21		545434 (9004100-0420)	O-ring	1
	J100	03-21		5000489	Screw, M10	4
	J110	03-21		4460586	Cover plate	1
	J120	03-21		4800482	A pad seal	1
	J130	03-21		9007200-3712	Screw	2
	J140	03-21		11017433	Coupling, 11 tooth	1
T2NC	J010	11-25		11088688	Shaft, tapered, with auxiliary drive	1
	J012	11-25		9003310-2514	Key	1
	J020	11-25		11100205	End cap, CCW, axial ports, LRL	1
	J030	11-25		672295 (9007314-1010)	Screw, M10	4
	J042	11-25		5000438	Plug assembly, M14	1
	J043	11-25		5000438	Plug assembly, M14	1
	J050	11-25		9004700-1907	Pin	1
	J082	11-25		5000570	Plug assembly, M18	1

Housing/shaft seal

(A5N & A6N)

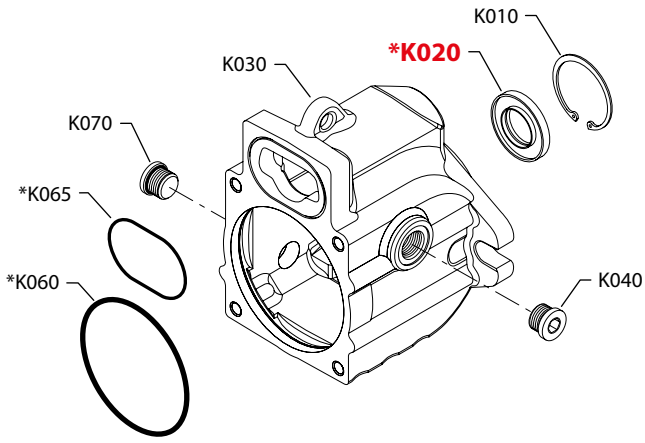

(B6N)

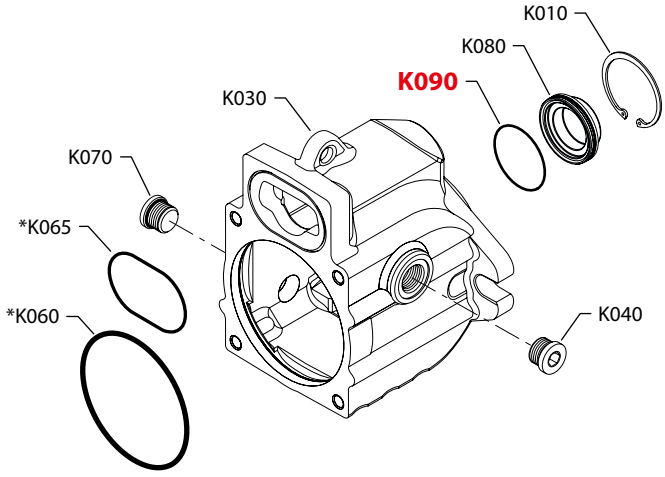

E100 392E

* = included in base motor seal kit Q210

Enlarged **bold** type item numbers are recommended part to stock for servicing.

Housing/shaft seal

Housing and shaft seal

Order code	Item	Date begin	Date end	Part number	Part name	Qty. per model/kit
A5N	K010	07-08		9006200-0206	Retaining ring	1
	K020	07-08		1701383	Lip seal	1
	K030	07-08		11088042	Housing (SB-2011-030)	1
	K040	07-08		5000439	Plug assembly, metric, M22	1
	K060	07-08		5000581	O-ring	1
	K065	07-08		1700790	Servo piston seal	1
	K070	07-08		5000439	Plug assembly, metric, M22	1
A6N	K010	00-47		9006200-0206	Retaining ring	1
	K020	00-47		1701383	Lip seal	1
	K030	03-33		11087000	Housing (SB-2003-005 & SB-2011-030)	1
	K040	00-47		315325 (9005110-8700)	Plug assembly	1
	K060	00-47		5000581	O-ring	1
	K065	03-33		1700790	Servo piston seal	1
	K065	00-47	03-32	5000569	Servo piston seal (SB-2003-005)	1
	K070	00-47		315325 (9005110-8700)	Plug assembly	1
B6N	K010	10-38		9006200-0206	Retaining ring	1
	K030	10-38		11087000	Housing (SB-2011-030)	1
	K040	10-38		315325 (9005110-8700)	Plug assembly	1
	K060	10-38		5000581	O-ring	1
	K065	10-38		1700790	Servo piston seal	1
	K070	10-38		315325 (9005110-8700)	Plug assembly	1
	K080	10-38		11086853	Shaft cover	1
	K090	10-38		9004104-0320	O-ring	1

Displacement limiter

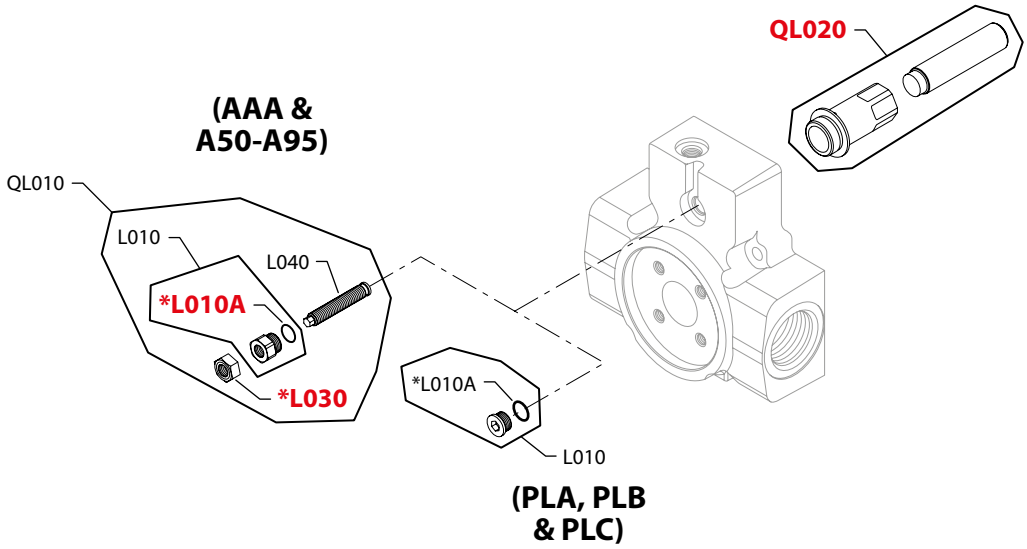

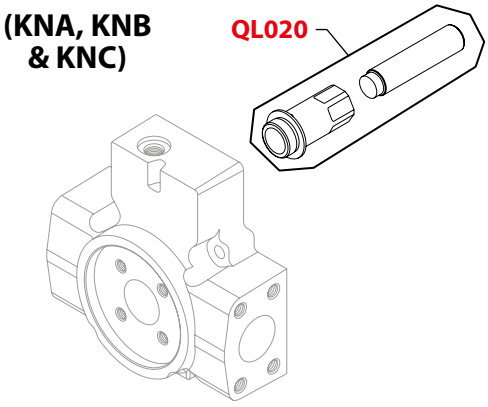

E101 662E

* = included in base motor seal kit Q210

Enlarged **bold** type item numbers are recommended part to stock for servicing.

Displacement limiter

Displacement limiter

Order code	Item	Date begin	Date end	Part number	Part name	Qty. per model/kit
A50-A95	L010	10-10		11015987	Displacement limiter plug, M12 (SB-2009-069)	1
	L010A	03-44		001131 (9004201-5000)	O-ring	1
	L030	10-10		9003509-0012	Seal nut, M12 (SB-2009-069)	1
	L030	03-44	10-09	5000661	Seal nut	1
	L040	10-10		11139902	Adjustment screw (SB-2009-069 & SB-2013-034)	1
	QL010	03-44		11068834	Displacement limiter kit, adjustable (SB-2009-069)	1
	QL020	03-44		4510352	Servo piston kit	1
AAA	L010	10-10		11015987	Displacement limiter plug, M12 (SB-2009-069)	1
	L010A	03-10		001131 (9004201-5000)	O-ring	1
	L030	10-10		9003509-0012	Seal nut, M12 (SB-2009-069)	1
	L030	03-44	10-09	5000661	Seal nut	1
	L040	10-10		11139902	Adjustment screw (SB-2009-069 & SB-2013-034)	1
	QL010	03-10		11068834	Displacement limiter kit, adjustable (SB-2009-069)	1
	QL020	03-10		4510352	Servo piston kit	1
KNA	QL020	04-49		4510353	Servo piston kit (SB-2003-015)	1
KNB	QL020	04-49		4510352	Servo piston kit (SB-2003-015)	1
KNC	QL020	04-49		4510440	Servo piston kit (SB-2003-015)	1
PLA	L010	03-10		001529 (9005100-7500)	Plug assembly (SB-2002-042)	1
	L010A	03-10		001131 (9004201-5000)	O-ring	1
	QL020	04-49		4510353	Servo piston kit (SB-2003-015)	1
PLB	L010	03-10		001529 (9005100-7500)	Plug assembly (SB-2002-042)	1
	L010A	03-10		001131 (9004201-5000)	O-ring	1
	QL020	04-49		4510352	Servo piston kit (SB-2003-015)	1
PLC	L010	03-10		001529 (9005100-7500)	Plug assembly (SB-2002-042)	1
	L010A	03-10		001131 (9004201-5000)	O-ring	1
	QL020	04-49		4510440	Servo piston kit (SB-2003-015)	1

Special hardware/displacement

(IDR & NNN)

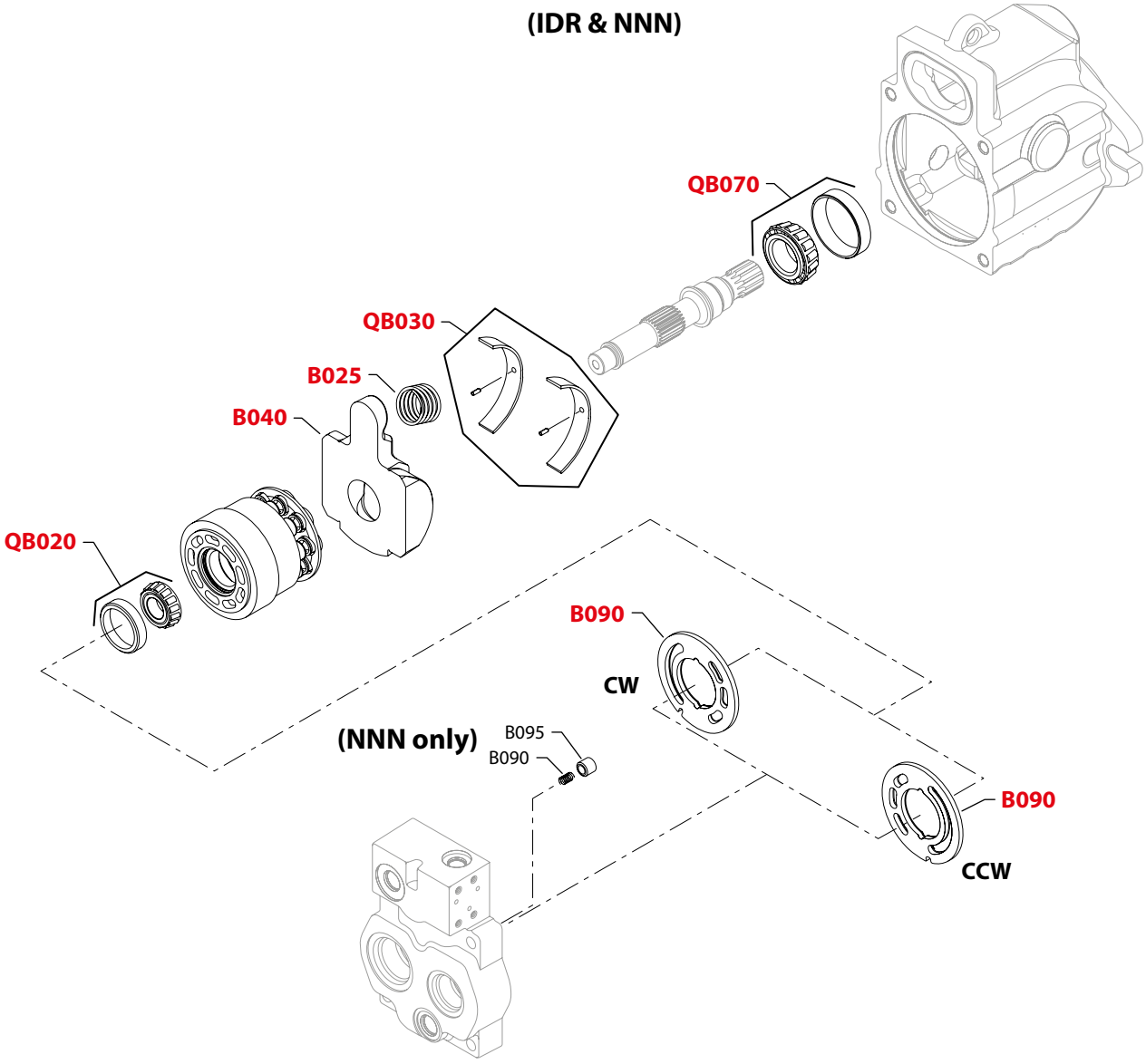

(025C & 030D)

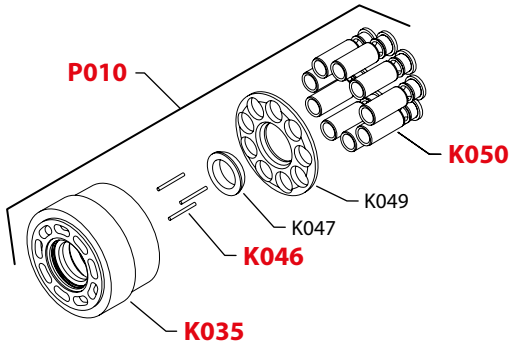

E100 385E

* = included in base motor seal kit Q210

Enlarged bold type item numbers are recommended part to stock for servicing.

Special hardware/displacement

Special hardware

Order code	Item	Date begin	Date end	Part number	Part name	Qty. per model/kit
IDR	B025	07-08		1700050	Bias spring	1
	B040	07-08		11084240	Swashplate (SB-2010-046)	1
	B090	07-08		1700254	Valve plate, CW, LRR	1
	QB020	07-08		4510387	Bearing kit, rear	1
	QB030	07-08		4510327	Swashplate bearing kit	1
	QB070	07-08		4510326	Bearing kit, front	1
NNN	B025	00-50		1700050	Bias spring	1
	B040	04-49		11084240	Swashplate (SB-2003-015 & SB-2010-046)	1
	B040	00-50	04-48	1700890	Swashplate	1
	B090	00-50		1700254	Valve plate, CW, LRR	1
	B090	00-50		1700255	Valve plate, CCW, LRL	1
	B095	00-50		1700256	Check valve poppet (SB-2001-020)	1
	B096	00-50		1700257	Check valve spring (SB-2001-020)	1
	QB020	00-50		4510387	Bearing kit, rear	1
	QB030	00-50		4510327	Swashplate bearing kit	1
	QB070	00-50		4510326	Bearing kit, front	1

Displacement

025C	P010	00-50		11082947	Cylinder block kit, 25cc	1
	K035	00-50		11089223	Cylinder block assembly	1
	K046	00-50		4700091	Slipper holddown pin	3
	K047	00-50		4400077	Slipper retainer giude	1
	K049	00-50		4254017	Slipper retainer	1
	K050	00-50		4254010	Piston assembly	9
030D	P010	00-50		11082979	Cylinder block kit, 30cc	1
	K035	00-50		11089224	Cylinder block assembly	1
	K046	00-50		4700091	Slipper holddown pin	3
	K047	00-50		4400077	Slipper retainer giude	1
	K049	00-50		4254017	Slipper retainer	1
	K050	00-50		4254013	Piston assembly	9

Seal kit

Overhaul seal kit

Order Code	Item	Date Begin	Date End	Part Number	Part Name	Qty. per Model/Kit
	Q210	00-50		11106339	Overhaul seal kit (SB-2008-003 & SB-2012-001)	1
	C118	00-50		11062214	Adjusting plug assembly (SB-2008-003)	1
	C138A	02-19		5000656	O-ring, .674 x .103, viton, 75D	1
	C138A	00-50	02-18	633354 (9004104-0180)	O-ring, .739 x .070, viton, 75D (SB-2002-020)	1
	C200	00-50		4740154	Seal ring	3
	J090	00-50		9004100-1550	O-ring, 3.987 x .103, nitrile, 70D	1
	J095	00-50		545434 (9004100-0420)	O-ring, 3.239 x .070, nitrile, 70D	1
	J095	00-50		9004104-0310	O-ring, 1.739 x 070, viton, 75D	1
	K020	00-50		1701383	Lip seal (SB-2006-005)	1
	K060	00-50		5000581	O-ring, 109.5 x 3.0 mm, nitrile, 70D	1
	K065	03-36		1700790	Servo piston seal	1
	K065	00-50	03-35	5000569	Servo piston seal (SB-2003-005)	1
	L010A	00-50		9004201-5000	O-ring	1
	L030	10-10		9003509-0012	Seal nut, M12 (SB-2009-069)	1
	L030	03-44	10-09	5000661	Seal nut	1

Service Bulletin: SB-2001-004

Products affected

Series 45, Frame K and L, Open Circuit Pumps

Subject

Control housing

Description

During labratory testing, Sauer-Danfoss has found that the control housing for Frame K and L open circuit pumps may crack when used in circuits that require high pressure compensator settingsof 210 bar and above. The same control housing is okay to use in circuits that require low pressure compensator settings below 210 bar. Please use caution when appling this unit and control when the pressure compensator setting requires a pressure setting of 210 bar and above.

Sauer-Danfoss has a new control housing that is capable of pressure compensator settings up to 260 bar. The old LS control kit part number 4510385 is obsolete and no longer available for service. The new control kit part number is 4510358. The LB control kit part number is 4510384. The screws for the new controls are longer than the old control screws.

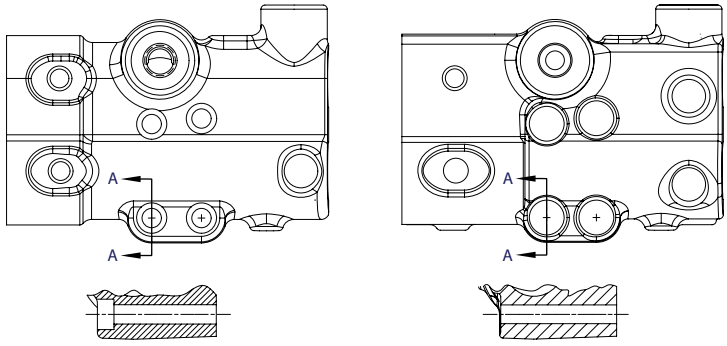

Section A-A

Old Housing

Section A-A

New Housing

Models affected

All Series 45 Frame K and L open circuit pumps

Serial numbers

This change became effective at serial number A-01-44-xxxxx

Part numbers affected

Part Description	Old Part Number	New Part Number
LS Control Kit	4510385	4510358
LB Control Kit	N/A	4510384
Screws	9007314-0610	9007314-0611

Parts disposition

- Interchangeable
- Use parts in stock

Service Bulletin: SB-2001-020

Products affected

Series 45, Frame K and L, Open Circuit Pumps

Subject

Case check valve poppet and check valve spring

Description

Sauer-Danfoss has made a product improvement to the case pressure check valve poppet and check valve spring used in the Series 45, Frame K and L open circuit pumps.

The check valve poppet material has changed from a plastic poppet and spring to a metal poppet and spring. This spring will provide longer poppet life.

The new check valve poppet and spring are interchangeable with the old plastic poppet ans spring, if both the poppet and spring are replaced.

The old plastic poppet and spring are obsolete and no longer available as service parts.

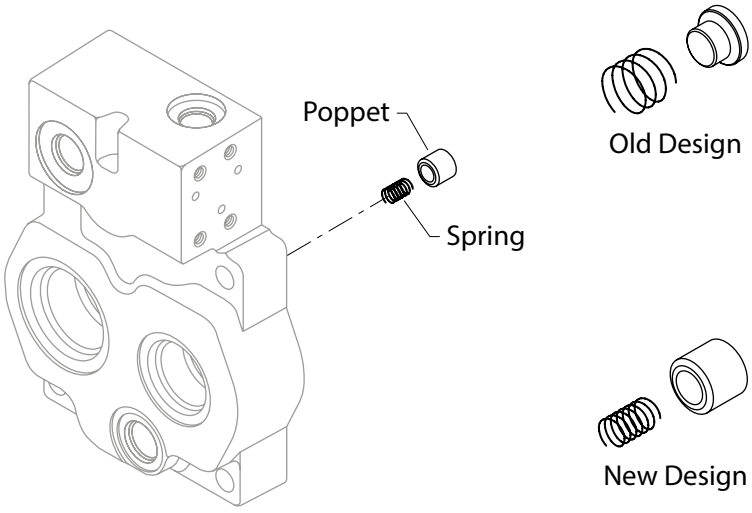

Models affected

All Series 45 Frame K and L open circuit pumps

Serial numbers

This change became effective at serial number A-01-41-xxxxx

Part numbers affected

Part Description	Old Part Number	New Part Number
Check Valve Spring	1700139	1700257
Case Check Valve Poppet	1700145	1700256

Parts disposition

- Interchangeable - If both the check valve poppet and spring are replaced
- Scrap Used Parts

Service Bulletin: SB-2001-023

Products affected

Series 45, LRR Open Circuit Pumps

Subject

Low noise end cap and valve plate

Description

Sauer-Danfoss has designed an end cap and valve plate for low noise.

This change is only interchangeable if both the new end cap and valve plate are used when replacing the end cap. You can use the old valve plate (p/n 1700202) with the new end cap, but you cannot use the new valve plate (p/n 1700542) with the old end cap.

The old cap cap is obsolete and no longer available for service.

Models affected

7004076 (Only model shipped for production)

Serial numbers

This change became effective at serial number A-01-47-xxxxx

Part numbers affected

Part Description	Old Part Number	New Part Number
End Cap	1700170	1700464
Valve Plate	1700202*	1700542

* Available for service only

Parts disposition

- Interchangeable - when replacing both end cap and valve plate
- Use parts in stock

Service Bulletin: SB-2002-006

Products affected

Series 45, Frame G, K, and L open circuit pumps

Subject

Load sense adjusting plug

Description

As a product improvement, Sauer-Danfoss has changed the width and depth of the O-ring groove on the load sense adjusting plug used in the LS and LB control options. This change was made to reduce the possibility of external leaks.

The new load sense adjusting plug comes with the O-ring and backup rings installed. The new load sense adjusting plug is interchangeable only if the new O-ring and backup rings are used.

The old load sense adjusting plug is obsolete and no longer available as a service part. The O-ring and backup rings used on the old load sense adjusting plug are still available for service.

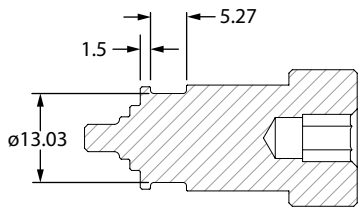

Old design

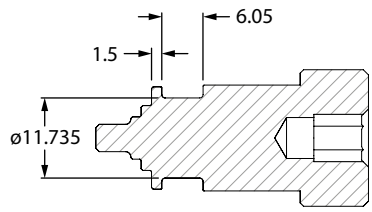

New design

Models affected

All Series 45, Frame G, K, and L open circuit pumps with the load sense control option.

Serial numbers

This change became effective at serial number A-02-09-xxxxx.

Part numbers affected

Part description	Old part number	New part number
O-ring	9004104-0140	5000503
Backup ring	5000525	5000657
Load sense adjusting plug	4740157	1700582*

*Adjusting plug comes with O-ring and backup rings installed

Parts disposition

■ Interchangeable - Only when the new plug, O-ring, and backup rings are used.

Service Bulletin: SB-2002-020

Products affected

Series 45, Frame G, K, and L open circuit pumps

Subject

Pressure compensator adjusting plug

Description

As a product improvement, Sauer-Danfoss has changed the width and depth of the O-ring groove on the pressure compensator adjusting plug used in the LS, LB and PC control options. This change was made to reduce the possibility of external leaks.

The new pressure compensator adjusting plug comes with the O-ring installed. The new pressure compensator adjusting plug is interchangeable only if the new O-ring is used.

The old pressure compensator adjusting plug is obsolete and no longer available as a service part. The O-ring used on the old pressure compensator adjusting plug is still available for service.

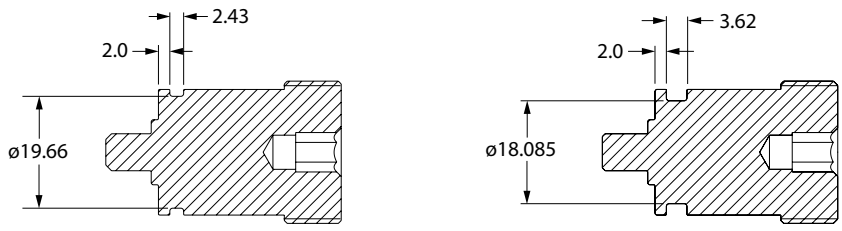

Old design New design

Models affected

All Series 45, Frame G, K, and L open circuit pumps with the LS, LB, and PC control option.

Serial numbers

This change became effective at serial number A-02-19-xxxxx.

Part numbers affected

Part description	Old part number	New part number
O-ring	9004104-0180	5000656
PC adjusting plug	4740054	1700581*

* Adjusting plug comes with O-ring installed

Parts disposition

■ Interchangeable - Only when the new plug and O-ring are used.

Service Bulletin: SB-2002-031

Products affected

Series 45, Frame E, G, J, K, and L open circuit pumps

Subject

Load sense spool spring guide change

Description

As a product improvement, Sauer-Danfoss has changed the load sense spool spring seat used in the two spool controls.

The spring seat changes from a conical interface with the spool to a spherical interface.

The new spring seat is interchangeable with the old one. The old spring seat is obsolete and no longer available as a service part.

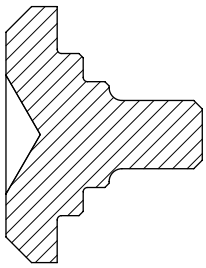

Old style

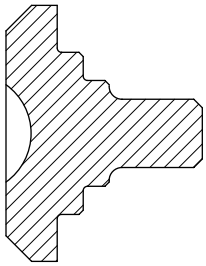

New style

Models affected

All Series 45, Frame E, G, J, K, and L open circuit pumps using two spool style controls.

Serial numbers

This change became effective at serial number A-02-38-xxxxx.

Part numbers affected

Old part number	New part number
4740156	4740246

Parts disposition

■ Interchangeable

Service Bulletin: SB-2002-033

Products affected

Series 45, LRL frame circuit pumps

Subject

Low noise valve plate for counterclockwise rotation

Description

Sauer-Danfoss has released a counterclockwise rotation low-noise valve plate for the Series 45, K frame open circuit pumps. This new low-noise valve plate is now the standard valve plate.

The new valve plate is interchangeable with the old valve plate. The old valve plate is obsolete. It is no longer available as a service part.

Models affected

All Series 45, K frame, counterclockwise rotation open circuit pumps.

Serial numbers

This change became effective at serial number A-03-20-xxxxx.

Part numbers affected

Part description	Old part number	New part number
Valve plate	1700210	1700639

Parts disposition

- Interchangeable
- Revise existing orders

Service Bulletin: SB-2002-034

Products affected

Series 45, E, G , K, and L frame open circuit pumps

Subject

Pressure compensating spring guide change

Description

As a product improvement, Sauer-Danfoss is changing the pressure compensator spool spring guide used in Series 45 control assemblies. The spring guide changes from a conical interface with the spool to a spherical interface.

The new spring guide is interchangeable with the old one. The old spring guide is obsolete. It is no longer available as a service part.

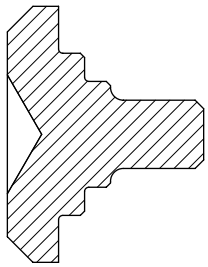

Old style

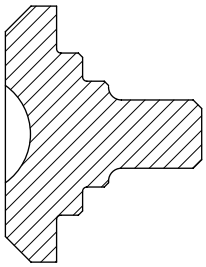

New style

Models affected

All Series 45 E, G , K, and L frame open circuit pump control assemblies.

Serial numbers

This change became effective at serial number A-03-02-xxxxx.

Part numbers affected

Part description	Old part number	New part number
Spring guide	4740053	4740247

Parts disposition

- Interchangeable
- Revise existing orders

Service Bulletin: SB-2002-042

Products affected

Series 45 K and L frame open circuit pumps

Subject

Adjustable displacement limiter

Description

As a product improvement, Sauer-Danfoss is adding adjustable displacement limiter option for Series 45 K and L frame open circuit pumps. Adding an adjustable displacement limiter requires a new end cap machine for the displacement limiter.

The new end caps are interchangeable with the old end caps, if the plug is added to pumps not using adjustable displacement limiter. The old end caps are obsolete and no longer available for service parts.

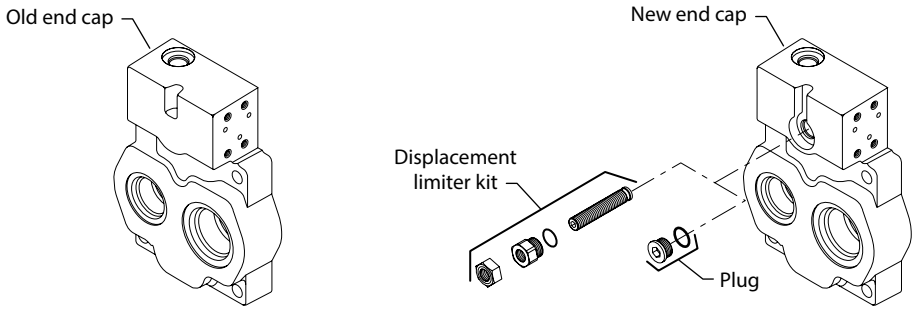

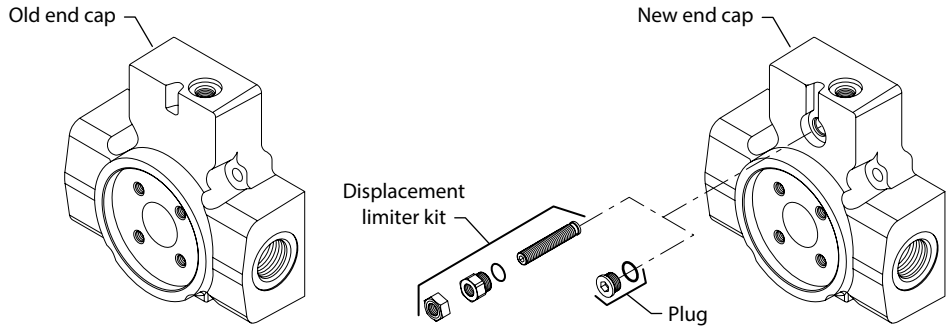

Models affected

Series 45 K and L frame open circuit pumps using the adjustable displacement limiter

Serial numbers

This change became effective at serial number A-03-10-xxxxx.

Part numbers affected

Description	Old part number	New part number
K frame, axial port, cw, control left	1700464	1700764
K frame, axial port, ccw, control left	1700465	1700773
K frame, radial port, cw, aux. mount, control right	1700477	1700763
K frame, radial port, ccw, aux. mount, control right	1700476	1700774
L frame, axial port, cw, control left	1700472	1700775
L frame, axial port, ccw, control left	1700473	1700776
L frame, radial port, cw, aux. mount, control right	1700470	1700777
L frame, radial port, ccw, aux. mount, control right	1700469	1700778
Displacement limiter kit	N/A	4510435
Displacement limiter plug	N/A	9005100-7500

Parts disposition

■ Interchangeable

Service Bulletin: SB-2003-005

Products affected

Series 45 K and L frame open circuit pumps

Subject

Change in servo piston seal

Description

Sauer-Danfoss has changed the way of sealing the servo piston in the K and L frame pumps. This change improves the sealing capabilities of the servo piston area and reduces leaks during assembly. The O-ring seal is no longer an H shaped formed O-ring; it is a round, hollow O-ring.

The housing has also changed. There is an O-ring groove where, previously, the O-ring was assembled against a machined shoulder in the housing.

The new O-ring seal and the new housing are interchangeable only when replaced together. The old housing is obsolete. It is no longer available as a service part. The old O-ring is still available as a service part.

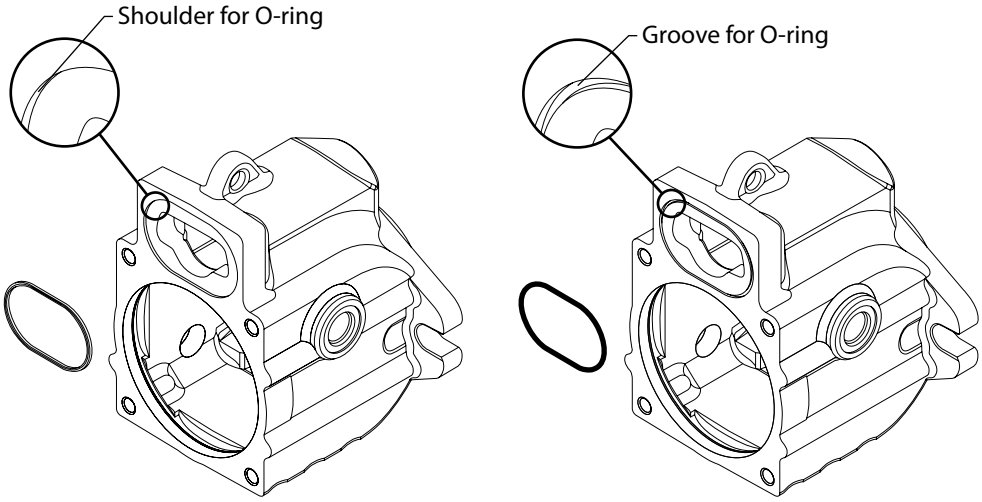

Models affected

All Series 45 K and L frame open circuit pumps.

Serial numbers

For pump housing 1700915, this change became effective at serial number A-03-33-xxxxx.

For pump housing 1700914, this change became effective at serial number A-03-36-xxxxx.

Part numbers affected

Description	Old part number	New part number
Servo piston seal	5000569	1700790
Pump housing with drain ports	1700164	1700915
Pump housing without drain ports	1700026	1700914

Parts disposition

■ Interchangeable - Only if you replace the pump housing and servo piston seal.

Service Bulletin: SB-2003-015

Products affected

Series 45 K and L frame open circuit pumps

Subject

Pressure balanced swashplate and larger servo piston

Description

Sauer-Danfoss has made a change to the swashplate, servo piston and servo piston guide. This change includes making the swashplate pressure balanced and the diameter of the servo piston and servo guide larger.

Lab testing shows that the new larger diameter servo piston and guide with the new pressure balanced swashplate to be more stable and better response.

The smaller diameter servo piston and guide should not be used with a new pressure balanced swashplate. This combination could make the system unstable.

The larger diameter servo piston and guide should not be used with an old style swashplate. This combination could make the system slow to respond.

The smaller diameter servo piston and guide and the unbalanced swashplate are still available as service parts.

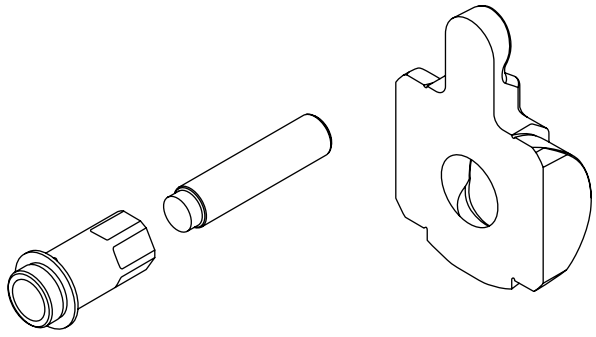

Models affected

All Series 45 K and L frame open circuit pumps except; 7004024, 7004025, 7004026, 7004117.

Serial numbers

This change became effective at serial number DC-04-49-xxxxx.

Part numbers affected

Description	Old part number	New part number
Servo piston 100%	1700220	1700875
Servo piston 92%	1700219	1701129
Servo piston 60%	1700598	1701130
Servo piston guide	1700221	1700201
Swashplate	1700890	1700704

Parts disposition

■ Interchangeable

Service Bulletin: SB-2008-003

Products affected

Series 45 K and L frame open circuit pumps

Subject

Load sense plug change

Description

As a product improvement, Sauer-Danfoss has changed the LS adjustment plug. The new LS plug assembly has better sealing capabilities. The new plug assembly is interchangeable with the old plug. It is recommended that the old plug be replaced with the new plug at first service. The old plug is no longer available for service.

The overhaul seal kit part number have also changed. They will now include the new LS plug assembly instead of the individual seals for the LS plug. The old seal kit is obsolete and no longer available for service.

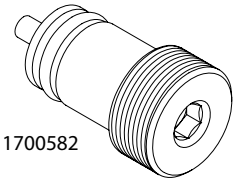

Old Design

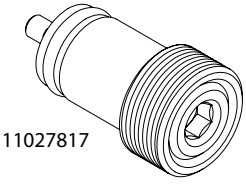

New Design

Models affected

All Series 45 K and L frame open circuit pumps.

Serial numbers

This change became effective at serial number DC-08-18-xxxxx.

Part numbers affected

Description	Old part number	New part number
LS adjustment plug	1700582	11027817
Overhaul seal kit, S45 K	4510331	11034353

Parts disposition

■ Interchangeable

Service Bulletin: SB-2008-029

Products affected

Series 45 K and L frame open circuit pumps

Subject

Change to load sense spring seat used in electric controls

Description

As a product improvement, Sauer-Danfoss is changing the load sense spring seat. This change effects control options, AA, ED, EH, EJ, and EP used on frame K and L open circuit pumps with load sense settings less than 10 bar and up to 20 Bar. The new load sense spring guide removes the free movement of the load sense spool at zero system pressure. It also provides higher resistance against pump instability.

The new load sense spring guide is interchangeable with the old load sense spring guide.

The old load sense spring guide is obsolete and no longer available for service.

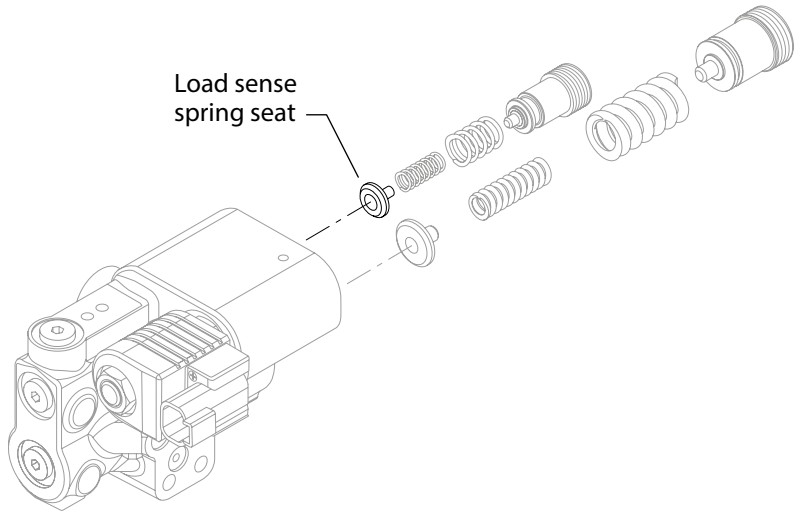

Models affected

Series frame 45 K and L pumps with AA, ED, EJ, and EP control options.

Serial numbers

For control option EJ, this change became effective at serial number S-08-10-xxxxx.
For control options AA, ED, EH, and EP, this change became effective at serial number S-08-26-xxxxx.

Part numbers affected

Description	Old part number	New part number
Load sense spring guide	4740301	11043218

Parts disposition

■ Interchangeable

Service Bulletin: SB-2008-064

Products affected

Series 45 K and L frame open circuit pumps

Subject

End cap part number change

Description

As a product improvement, Sauer-Danfoss is changing the coil for the electric ON/OFF control options to a more environmentally robust design. In doing this, the end caps need to have some material removed to allow a proper fit. Sauer-Danfoss is changing the part numbers of the end caps to track this change.

Currently, there are three control options that use the environmental coil. They are options EA, EH, and EJ.

The new end cap will replace the old end cap, but you cannot replace the new end cap with the old end cap. The old end caps are obsolete and no longer available for service.

Models affected

All Series 45 K and L frame open circuit pumps.

Service Bulletin: SB-2008-064

Part numbers affected

Frame	Rotation	Old part number	New part number
K	CCW	1701572	11056038
K	CCW	1700774	11056040
K	CCW	1700773	11056119
K	CCW	1701038	11056122
K	CCW	1701324	11056039
K	CCW	1700376	11056041
K	CCW	11045319	11056052
K	CCW	1700162	11056118
K	CCW	1700475	11056037
K	CCW	1700736	11056121
K	CCW	1701332	11056054
K	CCW	1701340	11056055
K	CCW	1701245	11056123
K	CW	1701154	11056056
K	CW	1700897	11056032
K	CW	1701571	11056028
K	CW	1700561	11056081
K	CW	1700385	11056031
K	CW	1700395	11056027
K	CW	1700758	11056115
K	CW	1701356	11056117
K	CW	1700763	11044393
K	CW	1701031	11056029
K	CW	1701061	11056984
K	CW	1701560	11056116
K	CW	1700634	11056112
K	CW	1700635	11056113
K	CW	1700474	11056026
K	CW	1700764	11056114
K	CW	1700719	11056033
K	CW	1701359	11056036
K	CW	1701352	N/A
L	CCW	1700778	11056189
L	CCW	1700776	11056191
L	CCW	1700466	11056186
L	CCW	11017741	11056187
L	CCW	1701104	11056192
L	CW	1700775	11056190
L	CW	1700777	11056184
L	CW	11016883	11056185
L	CW	11017736	11056182
L	CW	1700471	11056159
L	CW	N/A	11025143
L	CCW	N/A	11052895
K	CW	N/A	11044393

Parts disposition

You can replace the old end cap with the new end cap but you cannot replace a new end cap with an old end cap.

Service Bulletin: SB-2009-029

Products affected

Series 45 K and L frame open circuit pumps

Subject

Load sense spool material change

Description

As a product improvement, Sauer-Danfoss is changing the material used in manufacturing the load sense spool. This spool is used in all electric controls and remote pressure compensated controls for frame K and L open circuit pumps.

The new spool is interchangeable with the old spool. The part number has changed for tracking purposes, and the old spool is obsolete and no longer available for service.

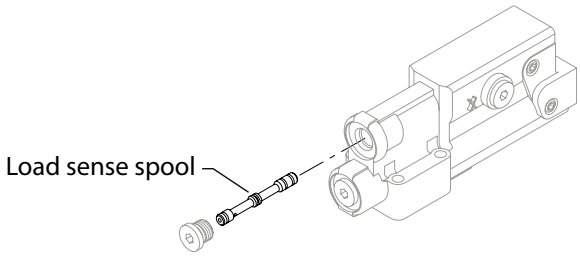

Models affected

All Series 45 frame K and L open circuit pumps using electric or remote pressure compensated controls.

Serial numbers

This change became effective at serial number S-09-40-XXXXX. (28-Sep-2009)

Part numbers affected

Description	Old part number	New part number
Load sense spool	1701003	11039323

Parts disposition

■ Interchangeable

Service Bulletin: SB-2009-034

Products affected

Series 45 K and L frame open circuit pumps

Subject

Change to load sense springs in all load sense controls and the spring guide used in electric controls

Description

As a product improvement, Sauer-Danfoss is changing the load sense springs. This change reduces the free movement of the spool when the load sense springs are unloaded. The new load sense springs will provide a more robust control and better performance for low load sense pressure settings.

Along with this change we are changing the load sense spring guide used in the electric controls, options AA, ED, EH, EJ, and EP used on frame K and L open circuit pumps back to the standard spring seat. (Reference SB-2008-029). The interim spring guide was used to reduce the spool free movement until the new load sense spring were qualified and released to production.

The standard load sense spring guide (4740301) is interchangeable with the interim load sense spring guide (11043218) and must be used with the new load sense springs. The interim load sense spring guide must not be used with the new load sense springs.

The interim load sense spring guide is obsolete and no longer available for service.

The new load sense springs are not interchangeable with the old load sense springs. When replacing either of the old load sense springs you must replace both with the new load sense springs.

The old inner load sense spring free length dimension is 0.860" (21.84 mm), the new inner load sense spring free length dimension is 0.970" (24.66 mm). The old outer load sense spring free length is 0.911" (23.14 mm), the new outer load sense spring free length is 0.900" (22.86 mm).

The old load sense springs are obsolete and no longer available for service.

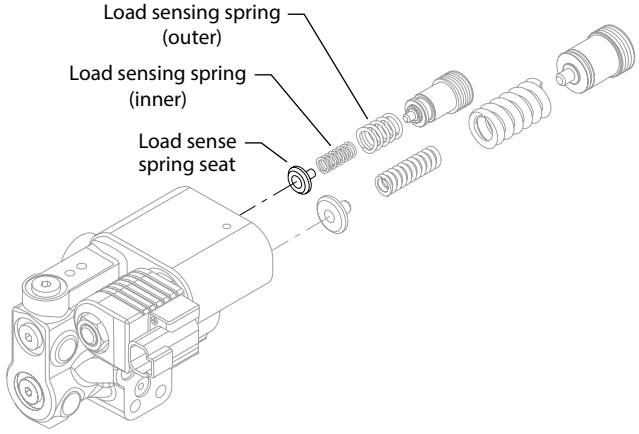

Models affected

Series 45 K and L frame pumps with AA, ED,EH, EJ, and EP control options using the spring guide 11043218.

Serial numbers

This change became effective at serial number S-10-06-XXXXX. (11 Feb 2010)

Part numbers affected

Old part number	Description	New part number
1700189	Load sense inner spring	11044985
1700190	Load sense outer spring	11044986
11043218	Spring guide	4740301

Parts disposition

Interchangeable -only when both of the new load sense springs and 4740301 spring seat are used.

Service Bulletin: SB-2009-069

Products affected

Series 45 K and L frame open circuit pumps

Subject

Displacement limiter change

Description

In an effort to use common parts for limiting the displacement of Series 45 open circuit pumps, Sauer-Danfoss is changing the displacement limiter parts used in frames K and L pumps.

The parts that are changing are; the displacement limiter servo plug, displacement limiter adjustment screw, and seal nut. The displacement limiter adjustment screw, seal nut and the internal thread in the displacement limiter servo plug changes from an SAE thread to an M12 x 1.75 metric thread. The external thread of the displacement limiter servo plug will remain a SAE ¾ x 16 thread (-8 ORB).

The old displacement limiter servo plug, displacement limiter adjustment screw, and adjustable displacement limiter kit are obsolete and no longer available for service.

The seal nut will remain available for service and will be added to the overhaul seal kit.

Models affected

Series 45, frame K and L open circuit pumps that have the capabilities of using a displacement limiter.

Serial numbers

This change became effective at serial number S-10-09-XXXXX. (04-Mar-2010)

Part numbers affected

Description	Old part number	New part number
Displacement limiter servo plug	1700750	11061013
Displacement limiter adjustment screw	1701347	11037670
Seal nut	5000661	9003509-0012
Adjustable displacement limiter kit	4510481	11068834

Parts disposition

■ Interchangeable

Service Bulletin: SB-2010-046

Products affected

Series 45 K and L frame open circuit pumps

Subject

Pressure balance groove change

Description

As a product improvement, Sauer-Danfoss has changed the pressure balance grooves on the swashplates used in frames K and L. This change moves the balance grooves so they are centered over the cradle bearings and the 3mm hole feeding oil from the swashplate running surface to the cradle bearings is centered over the cradle bearings also.

This will reduce bearing material erosion and provide more lubrication between the swashplate and bearings.

The new swashplate is interchangeable with the old swashplate.

The old swashplate is obsolete and no longer available as a service part.

Models affected

All Series 45, frame K and L open circuit pumps.

Serial numbers

This change became effective at serial number S-10-36-XXXXX (20-Sep-2010)

Part numbers affected

Description	Old part number	New part number
Swashplate	1700704	11084240

Parts disposition

■ Interchangeable

Service Bulletin: SB-2011-030

Products affected

Series 45 K and L frame open circuit pumps

Subject

Supplier change for the pump housing

Description

The supplier for the Series 45 K and L frame open circuit pump housings has changed. The new housings are completely interchangeable with the old housings.

The part numbers have changed for tracking purposes.

The old housings are obsolete and no longer available for service.

Models affected

All Series 45 K and L open circuit pumps.

Serial numbers

This change became effective at serial number S-12-14-XXXXX. (01-Apr-2012)

Part numbers affected

Housing order code	Old part number	New part number
A2N	1700914	11085575
A3N	1701373	11088046
A4N	1701329	11087001
A5N	1700929	11088042
A6N	1700915	11087000

Parts disposition

Interchangeable
Use parts in stock
Revise existing part orders

Service Bulletin: SB-2012-001

Products affected

Series 45 K and L frame open circuit pumps

Subject

Component changes to the overhaul seal kit

Description

Sauer-Danfoss has made a change to the overhaul seal kit for the Series 45 frames K and L open circuit pumps. This change removes the standard plug O-rings.

The new overhaul seal kit is interchangeable with the old overhaul seal kit.

The part number has changed for tracking purposes. The old seal kit is obsolete and no longer available for service.

Models affected

Series 45 frames K and L open circuit pumps

Serial numbers

This change became effective at serial number A-12-10-XXXXX. (03-Apr-2012)

Part numbers affected

Description	Old part number	New part number
Overhaul seal kit	11034353	11106339

Parts disposition

Interchangeable
Use parts in stock
Revise existing part orders

Service Bulletin: SB-2012-012

Products affected

Series 45 K and L frame open circuit pumps

Subject

Servo control (choke) orifice design improvement

Description

Sauer-Danfoss implemented a change to the servo control (choke) orifice design for the Series 45 K and L frame pumps.

The current servo control (choke) orifice design dampens all servo activity, increasing high pressure overshoots, and response time to de-stroke the pump. This is done with an orifice in the end cap servo oil passage.

The new servo control (choke) orifice design does not dampen PC response, reducing the high pressure overshoots, but dampens all other servo activity. This is done with a new control housing and a new spool with the orifice incorporated into the spool. The new spools cannot be used with the old housings.

The new control housing can be identified by a drill point between the two internal hex plugs on the end of the control housing opposite the pressure adjusting screws.

This change affects the PC/LS, Remote PC/LS, Electric on/off PC/LS, and Electric proportional PC/LS controls.

This change does not include the PC only and LS only control.

There will be new control kit part numbers assigned to replace the old control kit part numbers.

The new control kits are not interchangeable with the old control kits.

The new control kits for the electric proportional controls will have a 0.8mm orifice spool installed in the control assembly and a 1.0mm orifice spool included in the package.

The old control kits will be obsolete and no longer available for service.

The servo control (choke) orifice can be found in the G module of the order code.

Reference PIB: HY2012-035.

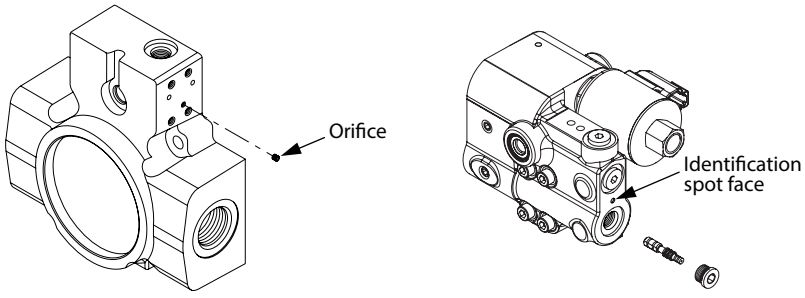

Service Bulletin: SB-2012-012

Models affected Series 45 K and L frame open circuit pumps with servo control (choke) orifice.

Serial numbers This change became effective at serial number S-12-40-XXXXX (01-Oct-2012)

Part numbers affected

Code	Description	Old part number	New part number
AA	Electric on/off, 12VDC, NO, Deutsch	4510445	11114388
AB	PC/LS w/bleed orifice (0.3mm equivalent, 30-108 bar)	4510404	11115333
AC	PC (30-108 bar)	4510403	11115379
AJ	PC/LS, metric M12-1.5 THD, LS signal port	4510407	11115375
AM	PC/LS, w/bleed orifice (1.2mm equivalent), high gain spool	11043727	11115334
AS	PC/LS, (30-108bar)	4510406	11115331
EA	Electric on/off, 12VDC, NO, Deutsch	11061752	11114412
EB	Electric on/off, 12VDC, NC, Deutsch	11085985	11114384
EC	Electric on/off, 12VDC, Solenoid De-Stroking	11091890	11115569
ED	Electric on/off, 12VDC, NC, Deutsch	4510446	11114387
EE	Electric on/off, 24VDC, NC, Deutsch	11100554	11114390
EF	Electric on/off, 12VDC, NC, Deutsch, w/system pressure filter screen	11077393	11115568
EG	PC, electric on/off solenoid, NO, 24VDC, Deutsch	N/A	11117666
EH	Electric Proportional , 12VDC, NC, Deutsch	11049362	11114385
EJ	Electric Proportional, 24VDC, NC, Deutsch	11049363	11114389
EK	PC/LS capability, electric proportional, 12VDC, NO, Deutsch	N/A	11107314
EL	PC/LS capability, electric proportional, 24VDC, NO, Deutsch	N/A	11107315
EM	PC/LS capability, electrical proportional, 12VDC, NC, Deutsch	N/A	11107316
EN	PC/LS capability, electrical proportional, 24VDC, NC, Deutsch	N/A	11107317
EP	Electric Proportional -Dampened, 24VDC, NC, Deutsch	4510457	11114391
LB	PC/LS w/bleed orifice (0.3mm equivalent, 100-280bar)	4510384	11115257
LH	PC/LS, high gain spool, metric M12 -thd LS signal port	4510408	11115376
LJ	PC/LS, metric M12 -thd LS signal port	4510328	11115337
LS	PC/LS	4510358	11115255
LT	PC/LS, w/chamfered pilot edge on LS spool (100-260bar)	11087259	11115336
LV	PC/LS, metric M12 -thd LS signal port, w/chamfered pilot edge on LS spool	11102283	11115377
PC	PC	4510355	11115378
RP	Remote PC	4510409	11115335

Parts disposition ■ Non-interchangeable

Service Bulletin: SB-2013-034

Products affected

Series 45 K and L frame open circuit pumps

Subject

Displacement limiter adjustment screw

Description

A zinc coating is being added to the displacement limiter adjustment screw in K and L frame Series 45 pumps by Danfoss. This product improvement will improve the resistance to rust.

The new displacement limiter adjustment screw is interchangeable with the old displacement limiter adjustment screw.

The old displacement limiter adjustment screw is obsolete and no longer available as a service part.

Models affected

Series 45 K and L frame Open Circuit pumps with adjustable displacement limiters

Serial numbers

This change became effective at serial number S-14-05-XXXXX (27-Jan-2014).

Part numbers affected

Description	Old part number	New part number
Displacement limiter adjustment screw	11037670	11139902

Parts disposition

Interchangeable
Use parts in stock
Revise existing part orders

Notes

Notes

Notes

Products we offer:

- Bent Axis Motors
- Closed Circuit Axial Piston Pumps and Motors
- Displays
- Electrohydraulic Power Steering
- Electrohydraulics
- Hydraulic Power Steering
- Integrated Systems
- Joysticks and Control Handles
- Microcontrollers and Software
- Open Circuit Axial Piston Pumps
- Orbital Motors
- PLUS+1® GUIDE
- Proportional Valves
- Sensors
- Steering
- Transit Mixer Drives

Danfoss Power Solutions is a global manufacturer and supplier of high-quality hydraulic and electronic components. We specialize in providing state-of-the-art technology and solutions that excel in the harsh operating conditions of the mobile off-highway market. Building on our extensive applications expertise, we work closely with our customers to ensure exceptional performance for a broad range of off-highway vehicles.

We help OEMs around the world speed up system development, reduce costs and bring vehicles to market faster.
Danfoss – Your Strongest Partner in Mobile Hydraulics.

Go to www.powersolutions.danfoss.com for further product information.

Wherever off-highway vehicles are at work, so is Danfoss.

We offer expert worldwide support for our customers, ensuring the best possible solutions for outstanding performance. And with an extensive network of Global Service Partners, we also provide comprehensive global service for all of our components.

Please contact the Danfoss Power Solution representative nearest you.

Comatrol
www.comatrol.com

Schwarzmüller-Inverter
www.schwarzmueller-inverter.com

Turolla
www.turollaocg.com

Valmova
www.valmova.com

Hydro-Gear
www.hydro-gear.com

Daikin-Sauer-Danfoss
www.daikin-sauer-danfoss.com

Local address:

Danfoss
Power Solutions US Company
2800 East 13th Street
Ames, IA 50010, USA
Phone: +1 515 239 6000

Danfoss
Power Solutions GmbH & Co. OHG
Krokamp 35
D-24539 Neumünster, Germany
Phone: +49 4321 871 0

Danfoss
Power Solutions ApS
Nordborgvej 81
DK-6430 Nordborg, Denmark
Phone: +45 7488 4444

Danfoss
Power Solutions
Building #22, No. 1000 Jin Hai Rd
Jin Qiao, Pudong New District
Shanghai, China 201206
Phone: +86 21 3418 5200

Danfoss can accept no responsibility for possible errors in catalogues, brochures and other printed material. Danfoss reserves the right to alter its products without notice. This also applies to products already on order provided that such alterations can be made without subsequential changes being necessary in specifications already agreed.
All trademarks in this material are property of the respective companies. Danfoss and the Danfoss logotype are trademarks of Danfoss A/S. All rights reserved.

520L0583 • Rev DD • December 2014