MAKING MODERN LIVING POSSIBLE

Parts Manual

Series 90 42 cc
Axial Piston Motors

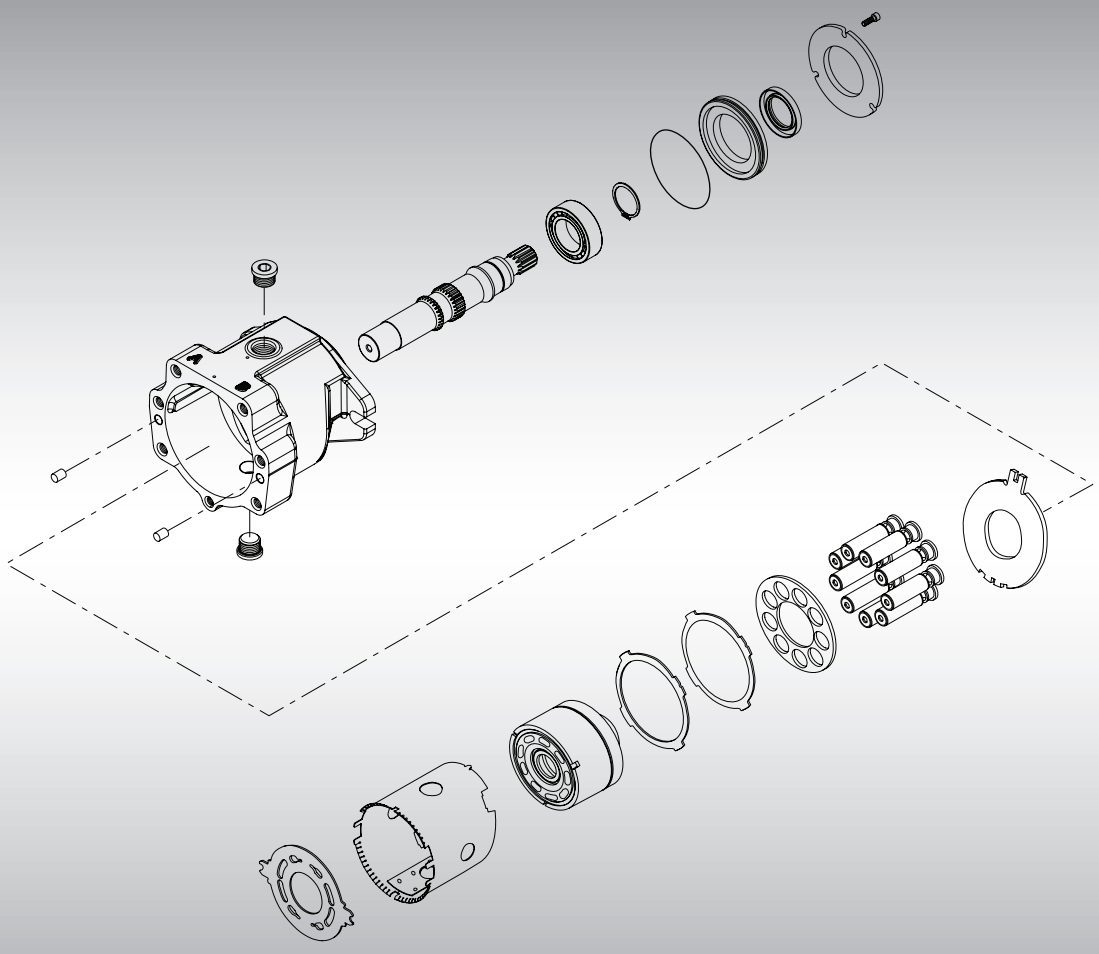

powersolutions.danfoss.com

Contents

General Information

Service parts identification 4
Nameplate 4
Date code 5
Service bulletins 5
Procedure to identify a part 5

Fixed Displacement Motor

Order code 7
Common parts 8-11
Special hardware 8-11
End cap 12-13
Loop flushing 12-13
Charge pressure setting 12-13
Shaft 14-15
Overhaul seal kit 15

Fixed Displacement Cartridge Motor

Order code 17
Common parts 18-19
Special hardware 18-19
End cap 18-19
Loop flushing 20-21
Charge pressure setting 20-21
Shaft 20-21
Overhaul seal kit 21

Service Bulletin

SB-1996-003 (slipper guide retainer) 22
SB-1996-011 (shaft seal retainer) 23
SB-2000-038 (housing and swashplate) 24

General information

Service parts indentification

The following information and procedure is used to identify the module group, item number, manufacture date, part number, and part name of the parts included in the Series 90, 42 cc fixed displacement cartridge motor.

The parts listed include all parts which may be used when performing either "Minor Repairs", "Major Repairs" or "Conversions" on the Series 90, 42 cc motor.

Nameplate

Each unit will have a nameplate affixed to the housing. The nameplate will include the following information.

Model Code
The Danfoss model code completely defines the specific unit and must be used when ordering parts to service this product.

Model Number
The Danfoss model number is used by the factory in manufacturing. On repeat orders, a complete unit can be ordered by the model number.

Serial Number
The Danfoss serial number is used to identify the manufacture date and the unit sequence in the build. The serial number is also used to identify the units warranty time period.

The letter code indicates the location of original manufacture (assembly). "N" indicates the unit was originally assembled in Neumunster, Germany.

The first number (2 digits) indicates the year of manufacture. ("01" would indicate the unit was manufactured in 2001)

The second number (2 digits) indicates the calendar week of manufacture.

The third number (5 digits) is a sequential number used to identify a specific unit.

General information

Date code

The date code is defined as the year and week of manufacture. The same item number may list more than one part number. This indicates that there is more than one configuration for that item number. You will see that there are different date codes for the different part numbers. Find the date code of your unit from the nameplate to determine which service part number you need to order.

EXAMPLE: The service part desired is Item H10

Order Code	Item	Date Begin	Date End	Part Number	Part Name	Usage
N	H10	89-38		8800668	Loop flushing spool, defeated	1
	H10	87-02	89-37	8800021	Loop flushing spool, defeated (SB-1989-020)	1

All units using this order code with a date code of 87-02 and up to and including 89-37, must use part number "8800021". All units with a date code of 89-38 and newer must use part number "8800668.".

Service bulletins

A Service Bulletin Number (SB-_ _ _ _ - _ _ _) may follow the "Part Name" of the part you desire. You must read that Service Bulletin prior to ordering that part. The information contained in these Service Bulletins, as of the print date of this bulletin, are included at the end of this manual. Service Bulletins contain more detailed information such as interchangeability, what additional parts are involved, etc. It is suggested that you add additional Service Bulletins to this manual as you recieve them.

Procedure to identify a part

General
The modular design of Series 90 units results in a simplified service parts list and part number identification procedure.

The same item numbers are used for same part names on all units within a product type. (Example: The lip seal - Item L40 has the same item number on all motors.)

A part number that has another number following it in parentheses is done to make this a world wide manual. The first number is sold in Germany. The number in parentheses is sold in the United States. (Example: 515965 (9005110-5600), customers would order 9005110-5600 if ordering the part in the United States.)

Example of a part identification
The nameplate on a Series 90 motor has an Order Code of 90K042 NC 0 N 8 N 0 C4 N 00 NNN 00 00 00. Use the following procedures to determine the part number of the drive shaft used on this motor.

1) Referring to the shaft module in the Order Code (see page 7), the shaft option for this motor is identified by the code "C4". (90K042 NC 0 N 8 N 0 **C4** N 00 NNN 00 00 00)

2) Referring to the Service Parts List, find the shaft group. Next find the order code that relates to this unit, which is "C4". The shaft is found to be item L100 and part number 755801.

Order code, fixed displacement motor

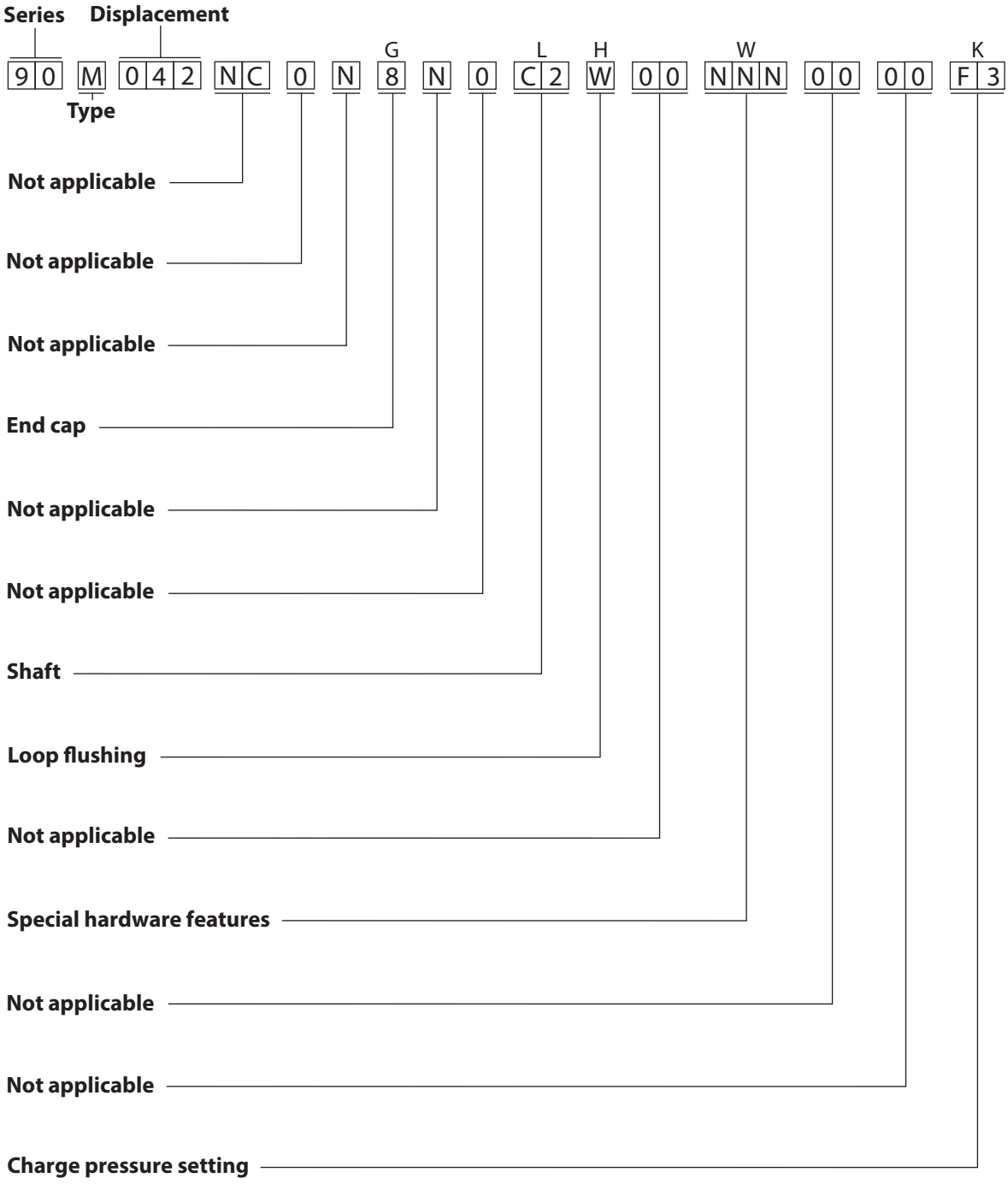

P108 710E

Fixed displacement motor

(EEA & EFA)

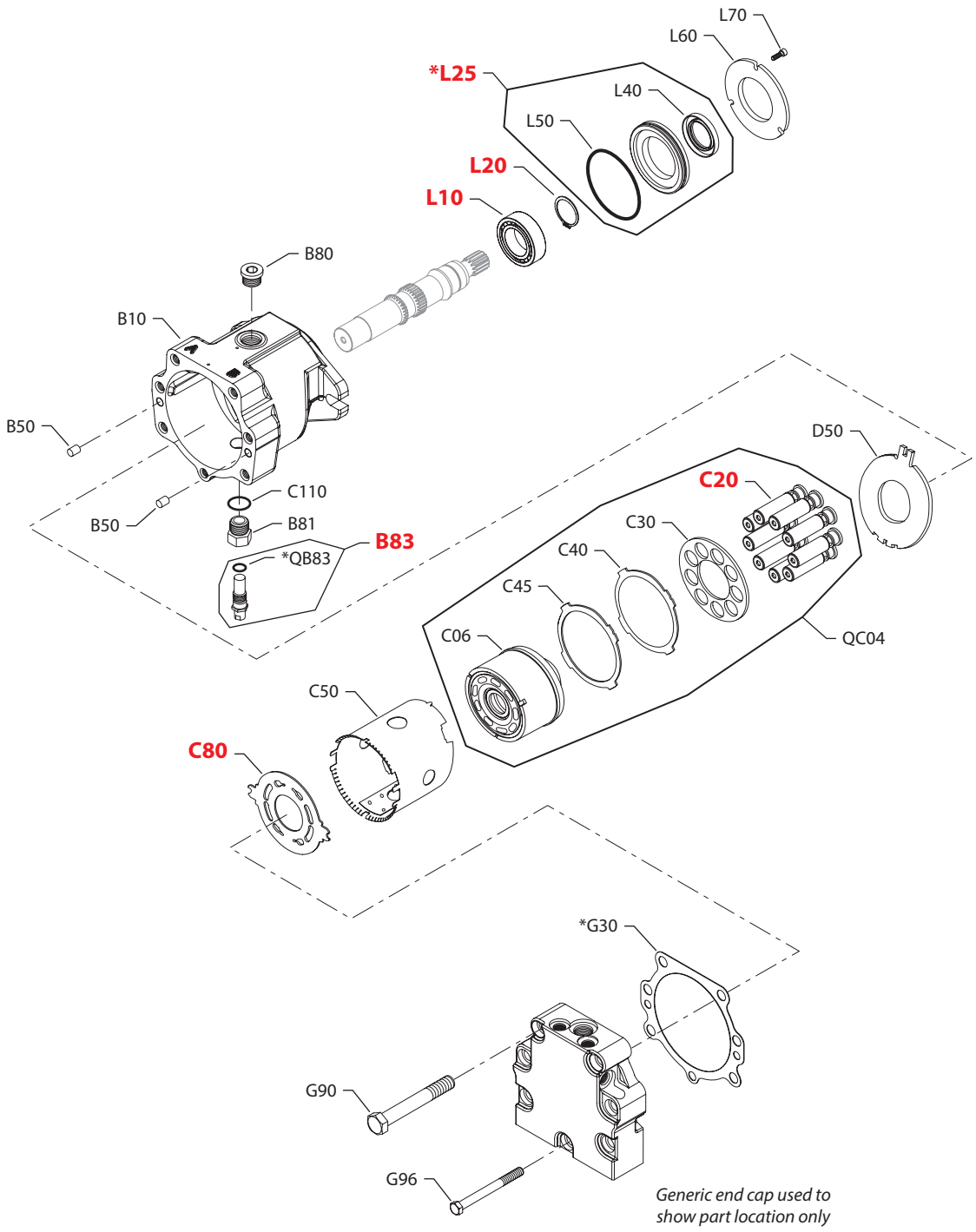

E103 007E

* = included in overhaul seal kit Q210

Enlarged **bold** type item numbers are recommended parts to be stocked for servicing

Fixed displacement motor

Common parts

Order Code	Item	Date Begin	Date End	Part Number	Part Name	Qty. per Model/Kit
	B10	92-40		11012088	Housing	1
	B50	92-40		9004800-3708	Pin	2
	B80	92-40		001537 (9005100-8700)	Plug assembly	1
	C20	92-40		706101	Piston assembly	9
	C30	92-40		11067347	Slipper guide	1
	C40	94-44		722090	Slipper guide retainer	1
	C45	92-40		505366	Slipper retainer guide shim	1
	C50	92-40		720599	Hold down tube	1
	C80	92-40		502186	Valve plate	1
	D50	92-40		505363	Thrust plate	1
	G30	92-40		723569	End cap gasket	1
	G90	92-40		348052	Screw	6
	G96	92-40		914044	Screw	1
	L10	92-40		11018483	Roller bearing	1
	L20	92-40		392134	Retaining ring	1
	L25	96-45		510541	Seal carrier assembly	1
	L40	96-45		510390	Lip seal	1
	L50	96-45		735084	O-ring	1
	L60	94-37		503267	Retainer plate (SB-1996-011)	1
	L70	92-40		672493 (9007210-0604)	Screw	3

Special hardware

EAA	B81	11-24		501516	Connector	1
	B83	11-24		KPPG12508	Speeds sensor	1
	C06	11-24		11094174	Cylinder block assembly with speed ring	1
	C110	11-24		001149 (9004201-6200)	O-ring	1
	QB83	11-24		9004201-3700	O-ring	1
	QC04	11-24		11134662	Cylindeer block kit with speed ring	1

EFA	B81	96-45		501516	Connector	1
	B83	96-45		KPPG156	Speeds sensor	1
	C06	96-45		11094174	Cylinder block assembly with speed ring	1
	C110	96-45		001149 (9004201-6200)	O-ring	1
	QB83	96-45		9004201-3700	O-ring	1
	QC04	96-45		11134662	Cylindeer block kit with speed ring	1

Fixed displacement motor

(JAA & NNN)

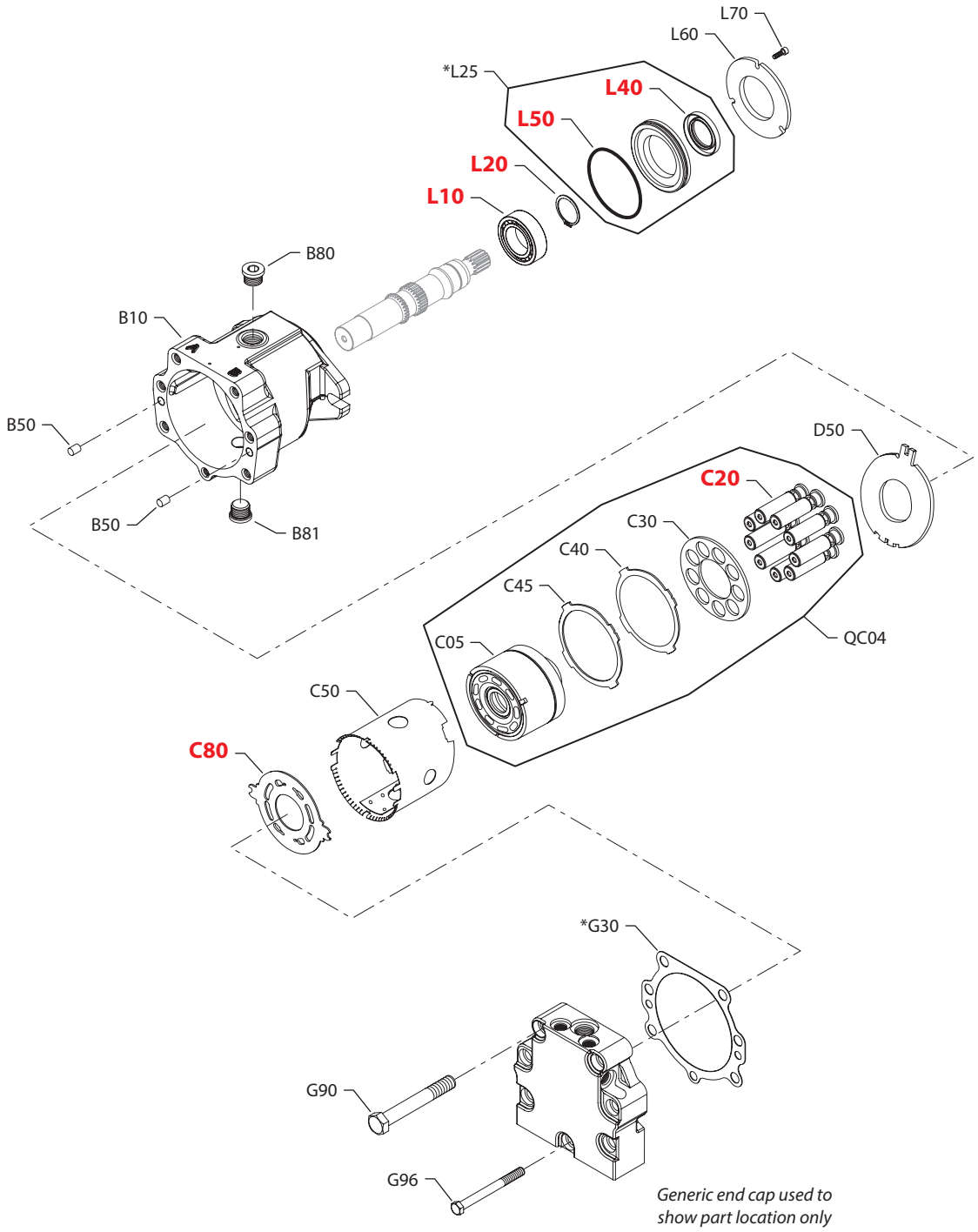

E103 008E

* = included in overhaul seal kit Q210

Enlarged **bold** type item numbers are recommended parts to be stocked for servicing

Fixed displacement motor

Common parts

Order Code	Item	Date Begin	Date End	Part Number	Part Name	Qty. per Model/Kit
	B10	92-40		11012088	Housing	1
	B50	92-40		9004800-3708	Pin	2
	B80	92-40		001537 (9005100-8700)	Plug assembly	1
	C20	92-40		706101	Piston assembly	9
	C30	92-40		11067347	Slipper guide	1
	C40	94-44		722090	Slipper guide retainer	1
	C45	92-40		505366	Slipper retainer guide shim	1
	C50	92-40		720599	Hold down tube	1
	C80	92-40		502186	Valve plate	1
	D50	92-40		505363	Thrust plate	1
	G30	92-40		723569	End cap gasket	1
	G90	92-40		348052	Screw	6
	G96	92-40		914044	Screw	1
	L10	92-40		11018483	Roller bearing	1
	L20	92-40		392134	Retaining ring	1
	L25	96-45		510541	Seal carrier assembly	1
	L40	96-45		510390	Lip seal	1
	L50	96-45		735084	O-ring	1
	L60	94-37		503267	Retainer plate (SB-1996-011)	1
	L70	92-40		672493 (9007210-0604)	Screw	3

Special hardware

JAA	B81	92-40		001537 (9005100-8700)	Plug assembly	1
	C05	92-40		763920	Cylinder block assembly	1
	QC04	92-40		11134663	Cylinder block kit	1
NNN	B81	92-40		001537 (9005100-8700)	Plug assembly	1
	C05	92-40		763920	Cylinder block assembly	1
	QC04	92-40		11134663	Cylinder block kit	1

Fixed displacement motor

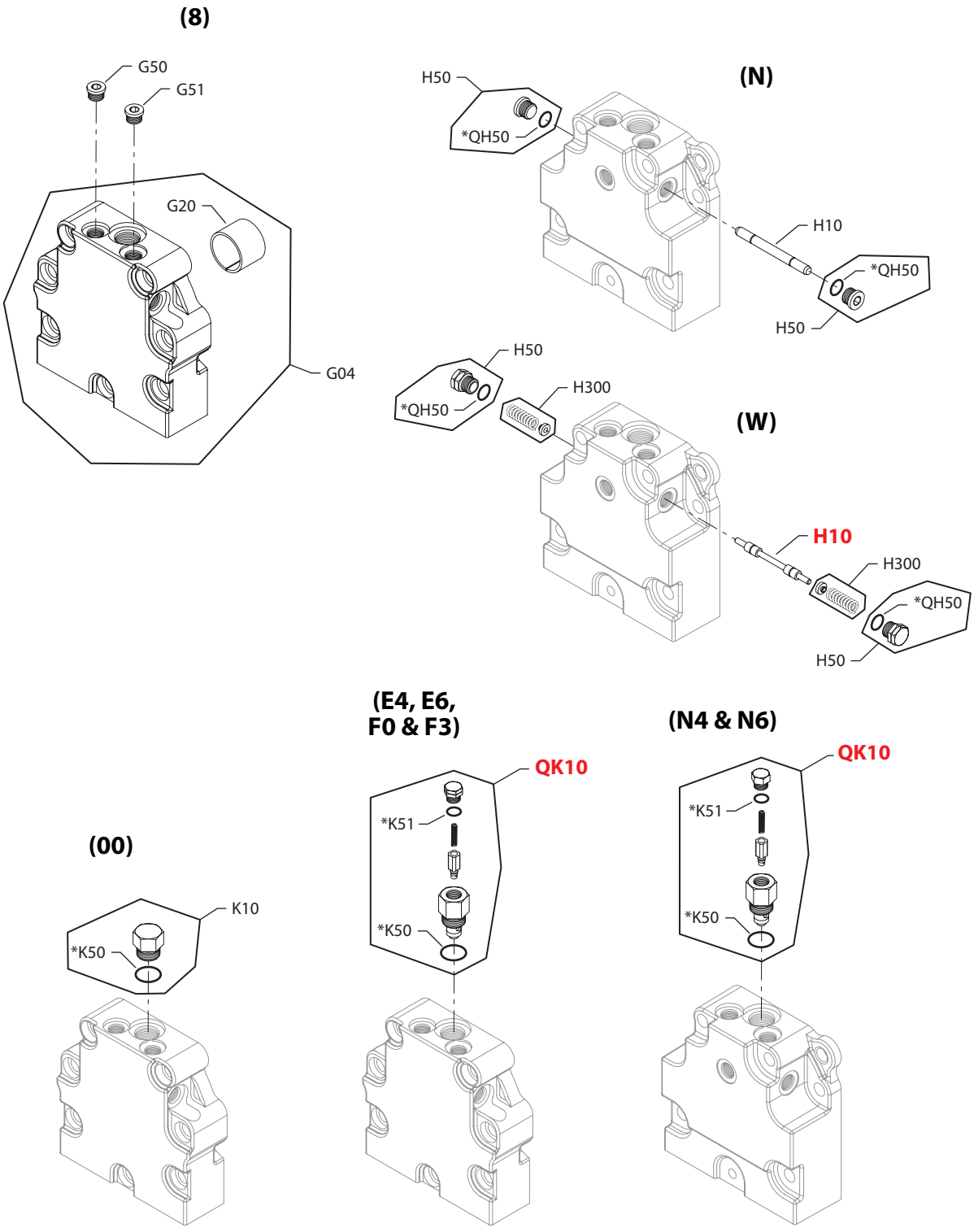

E103 009E

* = included in overhaul seal kit Q210

Enlarged **bold** type item numbers are recommended parts to be stocked for servicing

Fixed displacement motor

End cap

Order Code	Item	Date Begin	Date End	Part Number	Part Name	Qty. per Model/Kit
8	G04	92-40		724138	End cap assembly, twin ports	1
	G20	92-40		343830	DU bushing	1
	G50	92-40		140644	Plug assembly	1
	G51	92-40		140644	Plug assembly	1

Loop flushing

N	H10	92-40		8800668	Loop flush spool, defeated	1
	H50	92-40		140644	Plug assembly	2
	QH50	92-40		085043 (9004201-3700)	O-ring	2
W	H10	92-40		365544 (8800550)	Loop flush spool	1
	H50	92-40		518016	Plug assembly	2
	H300	92-40		513596	Spring guide assembly	2
	QH50	92-40		085043 (9004201-3700)	O-ring	2

Charge pressure setting

00	K10	92-40		001537 (9005100-8700)	Plug assembly	1
	K50	92-40		001149 (9004201-6200)	O-ring	1
E4	QK10	92-40		8510261	Charge pressure relief cartridge valve kit	1
	K50	92-40		001149 (9004201-6200)	O-ring	1
	K51	92-40		085043 (9004201-3700)	O-ring	1
E6	QK10	92-40		8510252	Charge pressure relief cartridge valve kit	1
	K50	92-40		001149 (9004201-6200)	O-ring	1
	K51	92-40		085043 (9004201-3700)	O-ring	1
F0	QK10	92-40		8510259	Charge pressure relief cartridge valve kit	1
	K50	92-40		001149 (9004201-6200)	O-ring	1
	K51	92-40		085043 (9004201-3700)	O-ring	1
F3	QK10	92-40		8510262	Charge pressure relief cartridge valve kit	1
	K50	92-40		001149 (9004201-6200)	O-ring	1
	K51	92-40		085043 (9004201-3700)	O-ring	1
N4	QK10	92-40		8510255	Charge pressure relief cartridge valve kit	1
	K50	92-40		001149 (9004201-6200)	O-ring	1
	K51	92-40		085043 (9004201-3700)	O-ring	1
N6	QK10	92-40		11097072	Charge pressure relief cartridge valve kit	1
	K50	92-40		001149 (9004201-6200)	O-ring	1
	K51	92-40		085043 (9004201-3700)	O-ring	1

Fixed displacement motor

(C2 & C3)

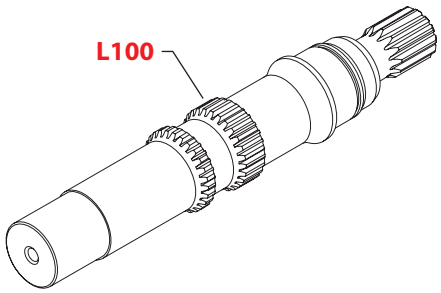

(K4)

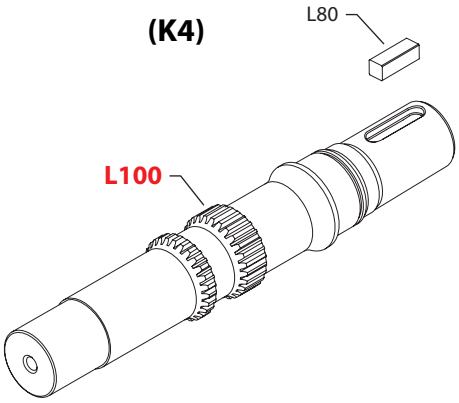

E103 010E

Enlarged **bold** type item numbers are recommended parts to be stocked for servicing

Fixed displacement motor

Shaft

Order Code	Item	Date Begin	Date End	Part Number	Part Name	Qty. per Model/Kit
C2	L100	92-40		723098	Shaft, 13 tooth spline	1
C3	L100	92-40		787127	Shaft, 15 tooth spline	1
K4	L100	92-40		770347	Shaft, straight key	1
	L80	92-40		057240	Key, 8 x 7 x 36mm	1

Overhaul seal kit

	Q210	92-40		11134051	Overhaul seal kit	1
	B12A	00-20		039297 (9004201-1200)	O-ring, .239 x .064, nitrile, 90D	1
	B15	92-40		729319	O-ring, 154.00 x 3.00mm, viton, 80D	1
	G30	92-40		723569	End cap gasket	1
	K50	99-24		001149 (9004201-6200)	O-ring, .755 x .097, nitrile, 90D	1
	K51	99-24		085043 (9004201-3700)	O-ring, .468 x .078, nitrile, 90D	1
	L25	96-45		510541	Seal carrier assembly	1
	QB83	96-45		085043 (9004201-3700)	O-ring, .468 x .078, nitrile, 90D	1
	QH50	92-40		085043 (9004201-3700)	O-ring, .468 x .078, nitrile, 90D	2

Order code, fixed displacement cartridge motor

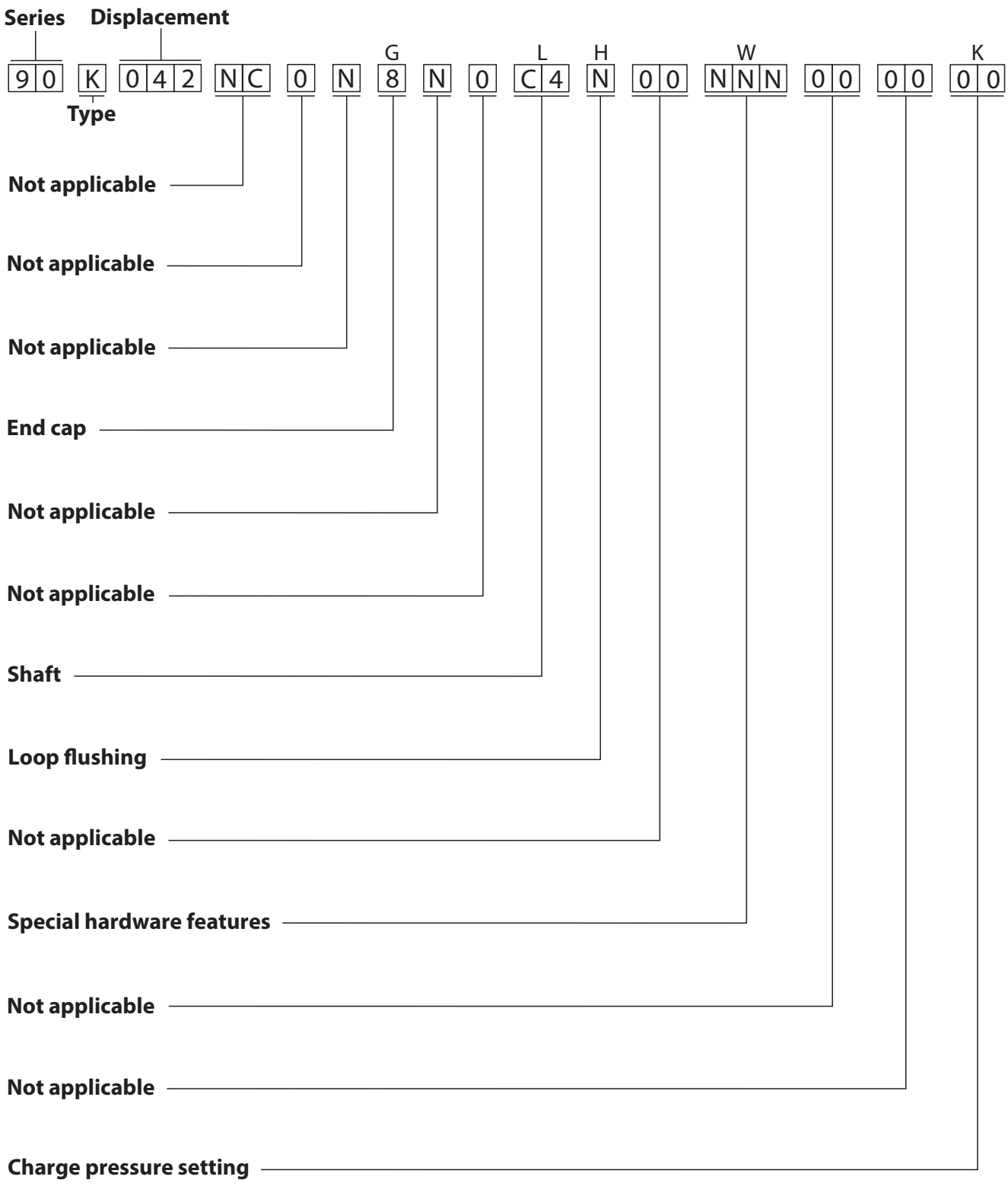

P100 685E

Fixed displacement cartidge motor

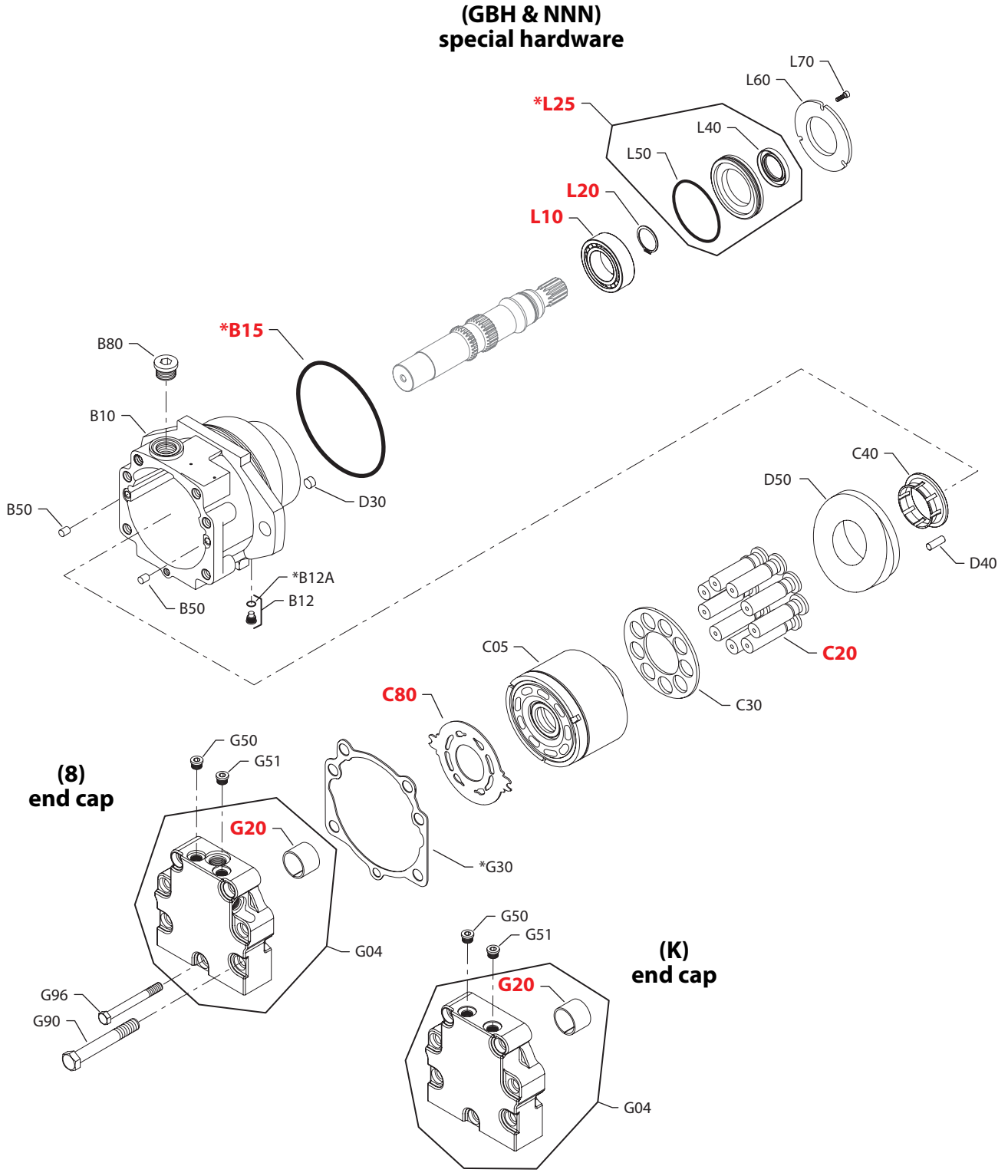

E100 701E

* = included in overhaul seal kit Q210

Enlarged **bold** type item numbers are recommended parts to be stocked for servicing

Fixed displacement cartidge motor

Common parts

Order Code	Item	Date Begin	Date End	Part Number	Part Name	Qty. per Model/Kit
	B10	00-20		515995	Housing (SB-2000-038)	1
	B12	00-20		515997	Screw assembly (SB-2000-038)	1
	B12A	00-20		039297 (9004201-1200)	O-ring	1
	B15	92-40		729319	O-ring	1
	B50	92-40		9004800-3708	Pin	2
	B80	92-40		001537 (9005100-8700)	Plug assembly	1
	C05	92-40		763920	Cylinder block assembly	1
	C20	92-40		706101	Piston assembly	9
	C30	92-40		763805	Slipper guide	1
	C40	94-44		504758	Slipper guide retainer (SB-1996-003)	1
	C80	92-40		502186	Valve plate	1
	D30	00-32		516389	Expandsion plug	1
	D40	92-40		707877	Pin	1
	D50	92-40		515996	Swashplate (SB-2000-038)	1
	G30	92-40		723569	End cap gasket	1
	G90	92-40		348052	Screw	6
	G96	92-40		914044	Screw	1
	L10	92-40		11018483	Roller bearing	1
	L20	92-40		392134	Retaining ring	1
	L60	94-37		503267	Retainer plate (SB-1996-011)	1
	L70	92-40		672493 (9007210-0604)	Screw	3

Special hardware

GBH	L25	96-45		510541	Seal carrier assembly	1
	L40	96-45		510390	Lip seal	1
	L50	96-45		735084	O-ring	1
NNN	L25	94-37		510541	Seal carrier assembly (SB-1996-011)	1
	L40	94-37		510390	Lip seal	1
	L50	94-37		735084	O-ring	1

End cap

8	G04	92-40		724138	End cap assembly, twin ports	1
	G20	92-40		343830	DU bushing	1
	G50	92-40		140644	Plug assembly	1
	G51	92-40		140644	Plug assembly	1
K	G04	92-40		505163	End cap assembly, twin ports, metric	1
	G20	92-40		343830	DU bushing	1
	G50	92-40		140644	Plug assembly	1
	G51	92-40		140644	Plug assembly	1

Fixed displacement cartidge motor

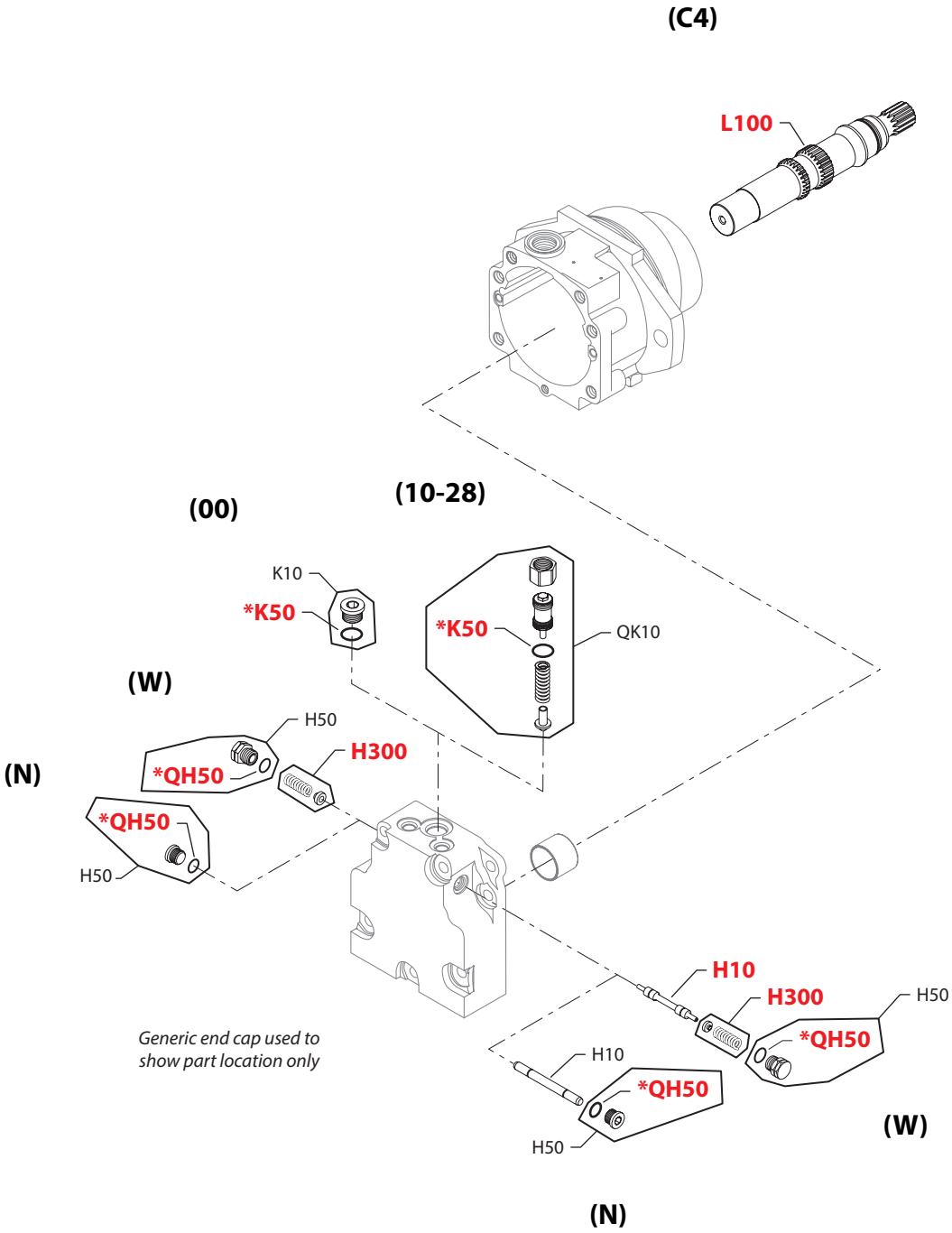

E100 702E

* = included in overhaul seal kit Q210

Enlarged bold type item numbers are recommended parts to be stocked for servicing

Fixed displacement cartidge motor

Loop flushing

Order Code	Item	Date Begin	Date End	Part Number	Part Name	Qty. per Model/Kit
N	H10	92-40		8800668	Loop flush spool, defeated	1
	H50	92-40		140644	Plug assembly	2
	QH50	92-40		085043 (9004201-3700)	O-ring	2
W	H10	92-40		365544 (8800550)	Loop flush spool	1
	H50	92-40		518016	Plug assembly	2
	H300	92-40		513596	Spring guide assembly	2
	QH50	92-40		085043 (9004201-3700)	O-ring	2

Charge pressure setting

00	K10	92-40		001537 (9005100-8700)	Plug assembly	1
10-28	QK10	92-40	98-11	8510012	Charge pressure relief valve kit	1
	K50	92-40	98-11	001149 (9004201-6200)	O-ring	1

Shaft

C4	L100	92-40		755801	Shaft, 15 tooth spline	1

Overhaul seal kit

	Q210	92-40		11134051	Overhaul seal kit	1
	B12A	00-20		039297 (9004201-1200)	O-ring, .239 x .064, nitrile, 90D	1
	B15	92-40		729319	O-ring, 154.00 x 3.00mm, viton, 80D	1
	G30	92-40		723569	End cap gasket	1
	K50	99-24		001149 (9004201-6200)	O-ring, .755 x .097, nitrile, 90D	1
	K51	99-24		085043 (9004201-3700)	O-ring, .468 x .078, nitrile, 90D	1
	L25	96-45		510541	Seal carrier assembly	1
	QH50	92-40		085043 (9004201-3700)	O-ring, .468 x .078, nitrile, 90D	2

Service bulletin: SB-1996-003

Products affected

Series 90 42 cc fixed cartridge motor

Subject

Slipper guide retainer change

Description

Danfoss has changed the design of the slipper guide retainer from a two piece retainer to a one piece retainer. The old design consisted of a DU washer and the slipper guide retainer. The new design eliminates the DU washer.

The old style retainer guide and DU washer will be obsoleted and will not be available as a service part. If either of the old style parts need to be replaced during repair, a new style slipper guide retainer must be used.

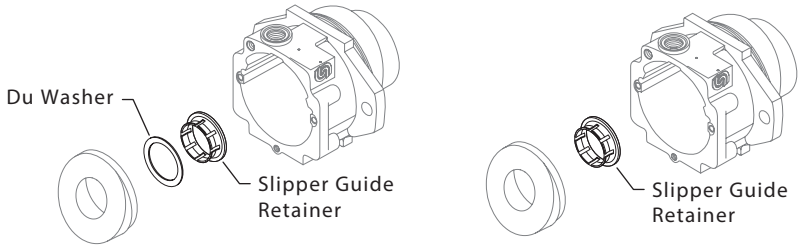

OLD DESIGN **NEW DESIGN**

Models affected

All series 90 42 cc fixed displacement cartridge motors (90K042).

Serial numbers

This change became effective at serial number N-94-44-xxxxx.

Part numbers affected

Description	Old p/n	New p/n
DU washer	685008	N/A
Retainer	684993	504758

Parts disposition

- Interchangeable - only if a new style one piece retainer is used

Service bulletin: SB-1996-011

Products affected

Series 90 42 cc fixed cartridge motor

Subject

Shaft seal retainer design

Description

As a product improvement, Danfoss has changed the one piece shaft retainer to a two piece design. This change will provide a common configuration for the seal retainer among all series 90 units.

The two piece seal retainer is interchangeable only if both the seal carrier (L30) and the retainer plate L60) are installed. The shaft lip seal (L40), O-ring (L50), and screws (L70) do not change. The old seal carrier (L35) will be obsoleted and no longer available as a service part.

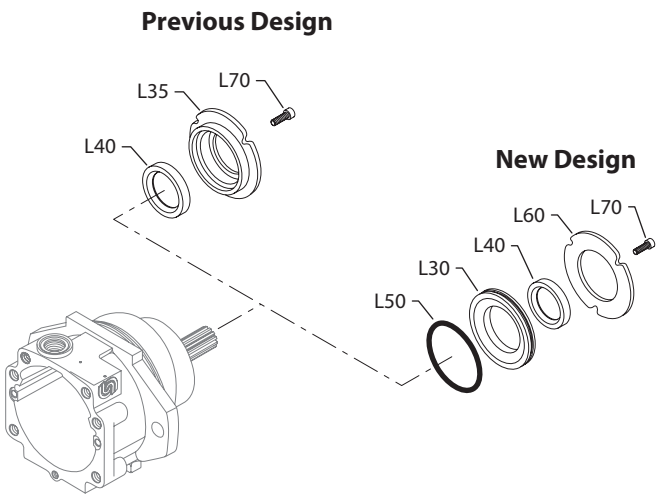

Models affected

All series 90 42 cc fixed displacement cartridge motors (90K042).

Serial numbers

This change became effective at serial number N-94-37-xxxxx

Part numbers affected

Item	Description	Old part number (Prior to 94-37)	New part number (94-37 and up)
L35	Seal carrier/retainer	723510	Not used
L30	Seal carrier	Not used	503270
L60	Retainer plate	Not used	503267

Parts disposition

■ Interchangeable (as an assembly)

Service bulletin: SB-2000-038

Products affected

Series 90 42 cc fixed cartridge motor

Subject

New housing and swashplate

Description

As a product improvement, Danfoss has changed the design of the series 90 42 cc fixed displacement cartridge motor housing and swashplate. The new design adds a screw through the housing that retains the swashplate axially.

To track this change, Danfoss has issued new part numbers for the housing, swashplate, and screw assembly. The swashplate is an interchangeable change: however, if the housing must be replaced, a new swashplate and screw assembly is required. The old part are obsolete and no longer available as service parts.

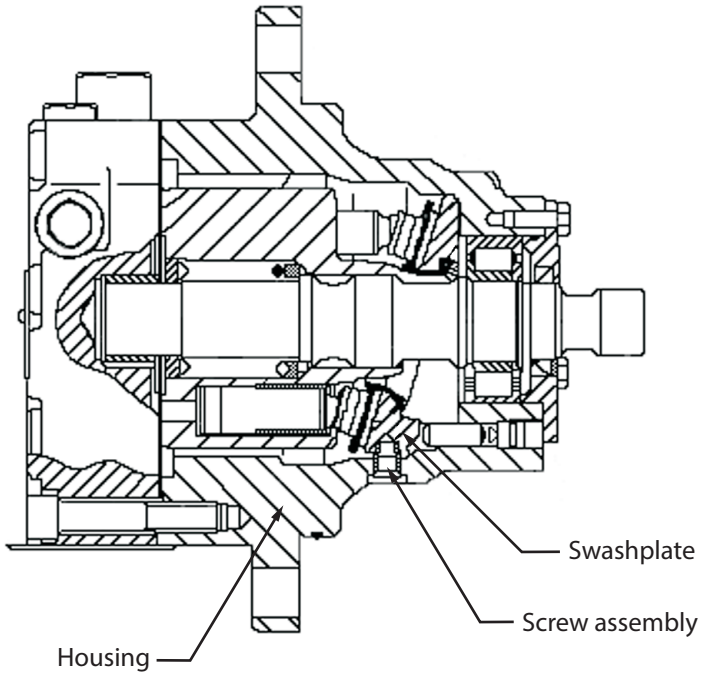

Models affected

93-3xxx and 933xxxx cartridge type motors

Serial numbers

This change became effective at serial number N-00-20-xxxxx

Part numbers affected

Description	Old part number	New part number
Housing	754960	515995
Swashplate	500956	515996
Screw assembly	N/A	515997

Parts disposition

■ Interchangeable - only the swashplate is interchangeable

Notes

Notes

Notes

Products we offer:

- Bent Axis Motors
- Closed Circuit Axial Piston Pumps and Motors
- Displays
- Electrohydraulic Power Steering
- Electrohydraulics
- Hydraulic Power Steering
- Integrated Systems
- Joysticks and Control Handles
- Microcontrollers and Software
- Open Circuit Axial Piston Pumps
- Orbital Motors
- PLUS+1® GUIDE
- Proportional Valves
- Sensors
- Steering
- Transit Mixer Drives

Danfoss Power Solutions is a global manufacturer and supplier of high-quality hydraulic and electronic components. We specialize in providing state-of-the-art technology and solutions that excel in the harsh operating conditions of the mobile off-highway market. Building on our extensive applications expertise, we work closely with our customers to ensure exceptional performance for a broad range of off-highway vehicles.

We help OEMs around the world speed up system development, reduce costs and bring vehicles to market faster.
Danfoss – Your Strongest Partner in Mobile Hydraulics.

Go to www.powersolutions.danfoss.com for further product information.

Wherever off-highway vehicles are at work, so is Danfoss.

We offer expert worldwide support for our customers, ensuring the best possible solutions for outstanding performance. And with an extensive network of Global Service Partners, we also provide comprehensive global service for all of our components.

Please contact the Danfoss Power Solution representative nearest you.

Comatrol
www.comatrol.com

Schwarzmüller-Inverter
www.schwarzmueller-inverter.com

Turolla
www.turollaocg.com

Valmova
www.valmova.com

Hydro-Gear
www.hydro-gear.com

Daikin-Sauer-Danfoss
www.daikin-sauer-danfoss.com

Local address:

Danfoss
Power Solutions US Company
2800 East 13th Street
Ames, IA 50010, USA
Phone: +1 515 239 6000

Danfoss
Power Solutions GmbH & Co. OHG
Krokamp 35
D-24539 Neumünster, Germany
Phone: +49 4321 871 0

Danfoss
Power Solutions ApS
Nordborgvej 81
DK-6430 Nordborg, Denmark
Phone: +45 7488 4444

Danfoss
Power Solutions
22F, Block C, Yishan Rd
Shanghai 200233, China
Phone: +86 21 3418 5200

Danfoss can accept no responsibility for possible errors in catalogues, brochures and other printed material. Danfoss reserves the right to alter its products without notice. This also applies to products already on order provided that such alterations can be made without subsequential changes being necessary in specifications already agreed.
All trademarks in this material are property of the respective companies. Danfoss and the Danfoss logotype are trademarks of Danfoss A/S. All rights reserved.

AX00000086en-US | 520L0847 • Rev 0300 • January 2016 www.danfoss.com © Danfoss A/S, 2013