ENGINEERING
TOMORROW

Technical Information

PLUS+1® Connect
CS100 IoT Gateway

www.danfoss.com

Revision history

Table of revisions

Date	Changed	Rev
August 2025	Added security manual	0301
September 2023	Updated compliance information	0201
June 2023	Added P/n's	0104
April 2021	Removed GNSS verbiage	0103
January 2021	Added output warning	0102
October 2020	First edition	0101

Contents

About this Manual
About this manual....5

Device elements
Device Information....6
Indicator elements....6
Type label....7
Intended use....7
Service and support....8

Product Conformity
CS100....9
Compliance with CE....9
Compliance with ECE R-10....9
PTCRB....9
PLUS+1® Compliance....9
IMDA....9

Safety information
General information....10
Safety advice....10
Avoid property damage....11
Connecting the supply voltage....12
Polarity reversal....12
IP protection rating....12
Welding guidelines....12
Warranty and liability....12
Servicing the CS100....12

Ordering information
Part number....13
Related products....13

Device Functions
Available variants & functions....14
Operating modes....14
GNSS (Global Navigation Satellite System)....14
Wireless Solution....14
SIM card....14
Input/output functions (I/O)....14
CAN interfaces....15
Device configuration....15
CS100 firmware update....15
Secure connection to the PLUS+1® Connect portal....15

Connector
Main connector....16

CS100 Technical Data
Electrical Data....17
Mechanical Data....17
Interface/Protocol/Certification....17
Multifunction inputs....18
Outputs....19

PLUS+1® Connect portal
Problem with connection to PLUS+1® Connect portal....20

Packaging and Transport
IP protection rating....21
Disposal....21

CS100 Technical Drawings
CS100 Dimensions....22

Contents

CS100 Cable 22

Mounting

Inside mount 23
Top Mount 23

Security Manual

Full Security Compliance 24
Secure Local Updates 24
Installation 24
Diagnosis Port Accessibility 24

About this Manual

About this manual

This document is part of the product and provides important information on the intended use, safety, installation and operation of the device(s) described below. The manual is intended for qualified technicians and electricians with advanced knowledge in electrical engineering and fieldbus systems, allowing them to estimate the risks and hazards of operating the device and to integrate it into systems with components of other manufacturers.

The qualified personnel must know the contents of this manual and have access to it at all times.

Device elements

This chapter gives an overview of the device elements, functions and describes the intended use. It further lists the available device variants and the product certifications.

Device Information

The device elements for the CS100

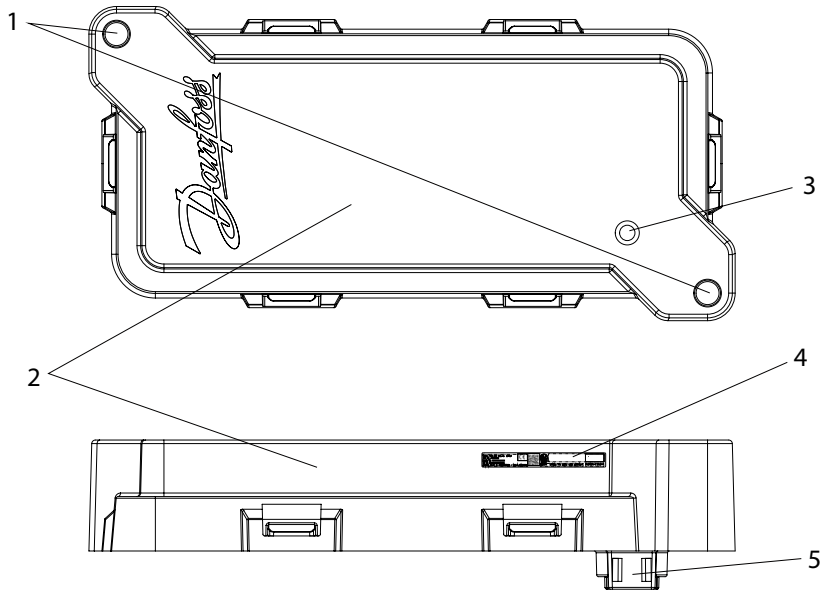

1. Mounting holes
2. Housing
3. Status LED
4. Type label
5. 8 Pin DEUTSCH connector

Caution

This device is not field serviceable. Opening the housing will void the warranty.

Indicator elements

The device is equipped with the indicator element: 1x Device State multicolor LED.

Device elements

Type label

The CS100 type label is located on the side of the enclosure.

CS100 type label information

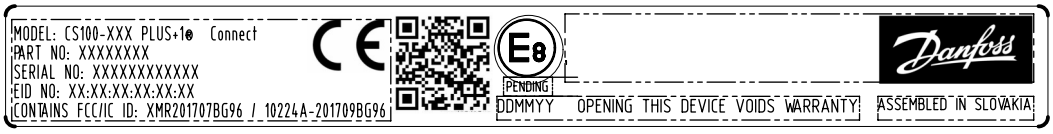

- Model
- Part number
- Serial number
- E-mark certification number
- CE Mark
- Country of Origin
- Traceability code in data matrix code

Caution

The device type label contains important information and should not be removed. Solvents can destroy the label imprint.
Do not contact the type label with any solvent-containing substance.

Intended use

Warning

Danger due to possibility of deficient data transmissions. This device operates using radio signals and cellular networks.
Do not us this device for safety-related applications.

Insufficient mobile radio network availability, interference, failure or malfunction of the device may lead to faulty data transmission. Because of this, data transmission cannot be guaranteed always and under all conditions.

- Do not operate the device in machines and applications where life depends on the proper (fault-free) operation of this device.
- Never rely solely on wireless device for essential communications, the CS100 is not designed for safety related applications.
- This device is designed to be used in systems which must be checked for conformity with legal requirements prior to placing into operation.
- Only qualified technicians and electricians with advanced knowledge of electrical engineering and fieldbus systems should put this device into operation. The integrator of this device is responsible to check and comply with regional directives and requirements.
- The device can be used in environments that require protection class IP69k.
- IP69k protection is only ensured if all connectors are plugged in or covered with suitable protection caps.
- Before exposing the device to dust and water, plug in all connectors.
- Do not immerse the device in water or other liquids.

The OEM of a machine or vehicle in which PLUS+1® or others electronic controls are installed has the full responsibility for all consequences that may occur.

Device elements

- Danfoss has no responsibility for any consequences (direct or indirect) caused by failures or malfunctions.
- Danfoss has no responsibility for any accidents caused by incorrectly mounted or maintained equipment.
- Danfoss does not assume any responsibility for PLUS+1® products being incorrectly applied or the system being programmed in a manner that jeopardizes safety.
- All safety critical systems shall include an emergency stop to switch off the main supply voltage for the outputs of the electronic control system. All safety critical components shall be installed in such a way that the main supply voltage can be switched off at any time. The emergency stop must be easily accessible to the operator.
- A system FMEA should be performed on all applications.

CS100 interfaces are designed for transmitting data that is available within a CAN network via LTE 4G Cat.M1, additionally via GSM/GPRS/EDGE.

The interfaces are suitable for use in mobile and stationary systems for industry, small business area, and in agricultural and forestry machinery. Featured is an easy-to-install plastic enclosure which can be bolted to a panel.

The devices have integrated antennas and must be installed properly to the machine to avoid bolt interference and to ensure the recommended line of sight to the sky.

Service and support

Contact PLUS+1® Support and Services:

https://www.danfoss.com/en/products/software/dps/plus1-software-services-support-and-training/plus1-support-and-services/#tab-overview

The most recent driver, firmware, tools and documentation versions are available for download from *https://www.danfoss.com/en/products/software/?sort=default_sort*

Caution

Warranty will be voided if device is opened.
Device is not field serviceable. Do not open the device.

Product Conformity

CS100

Compliance with CE

CE	This device complies with the directives, standards, and normative documents. Directive 2014/30/EC on Radio equipment and telecommunications terminal equipment Directive 2004/108/EC on Electromagnetic compatibility Immunity and Emission standard Earth moving and building construction machinery ISO13766-1:2018

Compliance with ECE R-10

Ex	This device has been approved to comply with Regulation No. 10. ECE Regulation No. 10 Revision 6, 11/20/2019 Approval No.: 10R-06 11848

PTCRB

PTCRB PCS Type Certification Review Board	This device has been certified for use on PTCRB Mobile Network Operator networks. For more information, see the certified device section http//ptcrb.com

PLUS+1® Compliance

+1®	Danfoss CS100 is compliant with PLUS+1® System Control Platform. Danfoss Telematics features are added in the Remote Interface (Machine information, signal strength, geographical position linked to Google Maps, CAN Status).

IMDA

Complies with IMDA Standards DB107243	IMDA certification for use of wireless devices in Singapore

Safety information

In this chapter, you will find important information on how to avoid life-threatening situations and injuries and how to prevent product damage.

General information

These instructions are part of the device.

They contain text and illustrations for the correct handling of the module and must be read before installation or use.

Before deploying the device described in this document, read the entire Technical Information and the User Manual document, including all safety information.

Non-observance of the notes, operation that is not in accordance with use as prescribed below, wrong installation or handling can result in serious harm concerning the safety of people and plant.

Keep this manual for future use and make all information available to anyone deploying the device, even after installation.

Tampering with the device can lead to considerable risks for the safety of people and plant. It is not permitted and leads to an exclusion of any liability and warranty claims.

The device must be installed, connected and put into operation by a qualified electrician.

In the event of malfunctions or uncertainties, please contact the manufacturer.

This device is designed to be used in systems which must be checked for conformity with legal requirements prior to placing into operation. The integrator of this device is responsible to check and comply with regional directives and requirements.

Warning

Danfoss strongly recommends that initialization and provisioning of CS100 IoT Gateways be completed outside of machine production processes. It is best practice to de-couple this initialization and provisioning from machine production processes.

Safety advice

General

Danger due to possibly deficient data transmission.

CS100 unit operates using radio signals and cellular networks and is not authorized for use in safety-related applications.

Deficient network coverage, failure or malfunction of the device may lead to deficient data transmission. Because of this, connection cannot be guaranteed at all times under all conditions.

- Do not operate the device in machines and applications where life depends on the proper operation of this piece of equipment.
- Never rely solely upon any wireless device for essential communications.

Health care

Danger of interference caused by RF energy.

Medical equipment may be sensitive to RF energy.

Safety information

- When in a hospital or other health care facility, observe the restrictions on the use of cellular communication equipment. Switch CS100 unit off, if instructed to do so by the guidelines posted in sensitive areas.

The operation of cardiac pacemakers, other implanted medical device and hearing aids can be affected by interference from CS100 unit's antennas placed close to the device.

- If in doubt about potential danger, contact a physician or the manufacturer of the implanted medical device to verify that it is properly shielded. Pacemaker patients are advised to keep CS100 unit and its antennas away from the pacemaker while it is on.

Air traffic

Danger of interference caused by RF energy.

The operation of wireless appliances in an aircraft is forbidden to prevent interference with communications systems. Failure to observe these instructions may lead to the suspension or denial of cellular services to the offender, legal action, or both.

- Switch the unit off before boarding an aircraft.
- Make sure it cannot be switched on inadvertently.

Explosives

Danger of explosion.

Operation of any electrical equipment in potentially explosive atmospheres can constitute a safety hazard.

- Observe the applicable regulations and precautions when you are near explosive areas (i.e. petrol stations, fuel depots, chemical plants or where blasting operations are in progress).
- Do not mount the antenna in the close environment of fuel tanks, vessels with explosives and insufficiently shielded electronic devices.

Antennas

Danger due to absorption of RF energy.

Mobile communication devices may pose a health risk when operated in close proximity of persons.

- Install the device with integrated antenna(s) used for the CS100 to provide a separation distance of at least 20 cm / 8 inches from all persons.
- Do not operate them in conjunction or co-locate them with any other antenna or transmitter.

Electronic equipment

Danger of interference caused by RF energy

The unit receives and transmits radio frequency energy while switched on. Interference may occur if it is used close to TV sets, radios, computers or inadequately shielded equipment.

Follow any special regulations and always switch off the unit wherever use is forbidden, or when you suspect that it may cause interference or danger.

Avoid property damage

Warning

Property damage may occur, and unintended movement of machine or mechanism may cause injury to the technician or bystanders. Before any installation of the Control system, turn ignition lock off and disconnect the battery. Before handling the device disconnect externally. Also, disconnect independently supplied output load circuits.

Safety information

Connecting the supply voltage

The supply voltage must be within the operating range. Connect the supply voltage to power supply. Protect the module by using a fuse with requisite fuse level: 2 amps. To avoid damage, switch off power to the device when connecting/disconnecting the main connector to the device.

The CS100 and control system must be connected to the same power supply and ground connection to ensure trouble free communication.

Polarity reversal

Polarity reversal can damage the unit. Protect the CS100 module against power supply polarity reversal by using an external fuse, maximum 2 amps.

IP protection rating

IP 67 rating is ensured only with the following guidelines:

- Do not expose the device to dust and water if the connectors are not plugged in.
- Do not immerse the device in water or other liquids.
- Do not operate the device unless temperature is between -40 °C and +75 °C (-40 °F and +167 °F).
- Do not store and/or transport the device unless it is kept at a temperature between -40 °C and +85 °C (-40 °F and +185 °F).

Welding guidelines

Welding should be done before the installation of the control system.

The following is recommended when welding on a machine equipped with electronic components:

- Turn the engine off.
- Remove electronic components from the machine before any arc welding.
- Disconnect the negative battery cable from the battery.
- Do not use electrical components to ground the welder.
- Clamp the ground cable for the welder to the component that will be welded as close as possible to the weld.

Warranty and liability

Danfoss assumes no liability for defects caused by normal wear, external influences, and errors of installation, operating or maintenance. This also applies if the customer itself or third parties without our approval modify the components of our products (such as devices, elements or additional hardware facilities; programs or program elements of the software).

Servicing the CS100

Warning

The device can only be repaired by the manufacturer, it is not field serviceable. Opening the device housing will void the Warranty.

Warning

To prevent misuse, immediately inform Danfoss in case of loss or theft of the device or the related SIM card that is factory pre-installed on it.

Ordering information

Use the following information to determine that products you can order.

Part number

Device variants and part numbers

Description	P/N	Applicability Region/Market
CS100 IoT Gateway	11230826	Europe (Including UK), USA, Canada, India
CS100-AUSG	11305497	Australia, Singapore
CS100-BR	11301180	Brazil

Related products

Related product and part numbers

DEUTSCH mating connector bag assembly	K29620 (16-20 AWG)

Device Functions

Available variants & functions

Variant	GNSS	CAN Bus Interface	Local MFIO	RTC	Data Logging	Power Management
CS100	Yes	2	2	Yes	Yes	Yes

Operating modes

CS100 devices operate in Data Logging mode.

Data logging

In this operation mode the CS100 unit logs specific CAN messages, GNSS position data and internal variables according to its configuration and sends them to the Danfoss PLUS+1® Connect portal.

CS100 devices have an internal non-volatile memory which allow CS100 to store the logged data in case of a cellular outage. When the cellular connection is recovered the logged data are sent to the Danfoss PLUS+1® Connect portal automatically.

GNSS (Global Navigation Satellite System)

The GNSS enables the devices to determine their position using the Global Positioning System (GPS). The position data can then be transmitted via the cellular connection to the Danfoss PLUS+1® Connect portal. The device includes a GNSS receiver for determining position data: the receiver can process signals from GPS, GLONASS, BeiDou and Galileo satellites. It can process data from multiple navigation systems simultaneously: this increases the accuracy.

The CS100 uses GNSS as a time source. When GNSS sync is not available, the local timing accuracy is ±2 seconds per day.

Wireless Solution

CS100 interfaces transmit data available on a CAN bus via LTE Cat.M1 and 2G telecommunication services.

Beyond the LTE Cat.M1/GSM functionality, these services allow for communication with web servers at higher data rates. The communication is based on the TCP/IP protocol, the communication is encrypted and secure (TLS). Using these services requires a connection to a Danfoss PLUS+1 Connect portal.

SIM card

Factory installed into the device there is a network operator SIM card.

Inserting generic SIM card is not possible because the housing cannot be opened.

The functionality depending on the ambient temperature can be assured for the maximum transfer rate only between -38 °C to 55 °C (36.4 °F to 131 °F).

Input/output functions (I/O)

CS100 feature two multifunction input/output (2 DIN/AIN/ResIN/FreqIN/CrntIN/DOut) configurable with several options like the same type of pins available on PLUS+1 ECUs. You can use the input function, for instance, to read and log status information from devices or machines as well as to directly determine and monitor switch and key states. You can send the data from the input/output function via the CAN bus or via the mobile radio network.

Device Functions

CAN interfaces

The device features 2 CAN bus interfaces. The CAN interfaces meet the specifications CAN 2.0 A/B protocol and the physical layer according to ISO 11898-2 high-speed up to 1 Mbit / s. The CAN interfaces are operational only when existing power supply is energized. A support for CAN-FD is not possible.

Device configuration

The CS100 can be remotely configured from the Danfoss PLUS+1® Connect portal to monitor the machine state, performance, and position. Both position and machine data are periodically transmitted and stored to the Danfoss Data Portal.

CS100 firmware update

A firmware update to the CS100 can be loaded via the Danfoss PLUS+1® Connect portal. The firmware update may reset the saved configuration to default. After the firmware update, load your configuration to the device through the PLUS+1® Connect portal.

Secure connection to the PLUS+1® Connect portal

CS100 always establishes a secure encrypted TLS connection to the PLUS+1® Connect portal. If, for specific reasons, the encryption is a problem, please contact a Danfoss representative for possible solutions.

Connector

CS100 is equipped with: 1x Main connector (CAN bus, I/O, Power).

Main connector

The connector functions:

- Connecting the device to the CAN bus network
- Supplying the device with power
- Local multifunction Inputs/Outputs

To avoid damage to the device, connect/disconnect the main connector only if the power supply to the device is switched off.

To maximize the performance of the GPS receiver, mount the GPS antenna in a place where it is level with the local geographic horizon and has full view of the sky above.

8-pin DEUTSCH CAN/power supply/local MFIO

The table and drawing below show the pin assignment and conductor colors of the connector. The colors stated in the table below are the conductor colors of the cable listed.

Power supply/ CAN bus/ I/O connector

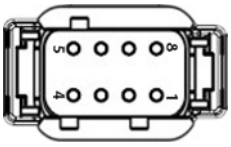

Pin	Designation	Color	Description
1	Ground	Black	Power Supply
2	9 to 36 Vdc	Red	Power Supply
3	CAN 1 high	Yellow	CAN bus 1
4	CAN 1 low	Green	CAN bus 1
5	MFIO1/CL15	Brown	Multifunction IO/Ignition
6	MFIO2	Orange	Multifunction IO
7	CAN 2 high	Yellow/White	CAN bus 2
8	CAN 2 low	Green/White	CAN bus 2

CS100 Technical Data

Electrical Data

Electrical data

DC supply voltage	9 to 36 Vdc
Memory buffering capacity	16 MB
EMI/RFI rating	100 V/m

Mechanical Data

Mechanical data

Dimension L x W x D	177 x 86 x 41 mm
Housing	Tamper resistant
Color	Black
Operating temperature	-40 to 75°C [-40 to 167°F]
Storage temperature	-40 to 85°C [-40 to 185°F]
IP rating	IP67 (with connector mated) IP69k (when top mounted and with connector plugged in or suitably capped)
Weight	250 grams
Status LED	1 Multi-color

Interface/Protocol/Certification

Interface/Protocol/Certification

CAN bus network	2 (ISO 11898-2 High Speed, 2.0A/B)
Multifunction Input/Output	2 (DIN/AIN/ResIN/FreqIN/CrntIN/CL15/DOUT)
Radio Module	LTE Cat M1 and 2G cellular
Cat M1 Throughput (UL/DL)	Max 375 kbps / Max 375 kbps
2G-EGPRS Throughput (UL/DL)	Max 236.8 kbps / Max 296 kbps
Cat M1 LTE FDD Bands	B1/B2/B3/B4/B5/B8/B12/B13/B18/B19/B20/B26/B28
2G – EGPRS Bands	850/900/1800/1900 MHz
GNSS Constellations	GPS, GLONASS, BeiDou, Galileo
Antennas	Cellular and GNSS (Internal)
SIM Card	Factory Installed
Certifications	PTCRB, RED, CE, E-Mark
Vibrations	IEC 60068-2-64
Shock	IEC 60068-2-27 test Ea

CS100 Technical Data

Multifunction inputs

Middle range analog

Description	Unit	Minimum	Typical	Maximum	Comment
Minimum discernible voltage	mV	—	—	20	—
Maximum discernible voltage	V	5.18	5.26	5.33	—
Resolution	mV	—	1.3	—	—
Worst case offset and gain error	mV	—	—	71	VMeasure = 5.26 V
Non-linearity	mV	—	—	±7.8	—
Input impedance	kΩ	232	233	234	No pull up or pull down
Input impedance (5V/GND)	kΩ	13.9	14.1	14.3	Pull up or pull down
Input impedance (2.5V)	kΩ	7.1	7.3	7.4	Pull up and pull down

High range analog

Description	Unit	Minimum	Typical	Maximum	Comment
Minimum discernible voltage	mV	—	—	145	—
Maximum discernible voltage	V	34.5	35.3	36.1	—
Resolution	mV	—	8.6	—	—
Worst case offset and gain error	V	—	—	.79	VMeasure = 35.5 V
Non-linearity	mV	—	—	±53	—
Input impedance	kΩ	109.1	109.3	109.5	No pull up or pull down (Vin < 5.7 V)
Input impedance (5V/GND)	kΩ	13.0	13.2	13.4	Pull up or pull down (Vin < 5.7 V)
Input impedance (2.5V)	kΩ	6.9	7.0	7.1	Pull up and pull down (Vin < 5.7 V)

Frequency input middle range

Description	Unit	Minimum	Typical	Maximum	Comment
Range	Hz	0	—	10000	In steps of 1 Hz
Range (phase and quad)	Hz	0	—	5000	In steps of 1 Hz
Rising voltage threshold	V	—	—	3.89	Voltage required for frequency input
Falling voltage threshold	V	0.85	—	—	Voltage required for frequency input
Input impedance	kΩ	232	233	234	No pull up or pull down
Input impedance (5V/GND)	kΩ	13.9	14.1	14.3	Pull up or pull down
Input impedance (2.5V)	kΩ	7.1	7.3	7.4	Pull up and pull down

Frequency (PPU) High Range

Description	Unit	Minimum	Typical	Maximum	Comment
Range	Hz	0	—	10000	In steps of 1 Hz
Range (phase and quad)	Hz	0	—	5000	In steps of 1 Hz
Rising voltage threshold	V	—	—	23.6	Voltage required for frequency input
Falling voltage threshold	V	5.6	—	—	Voltage required for frequency input
Input impedance	kΩ	109.1	109.3	109.5	No pull up or pull down
Input impedance (5V/GND)	kΩ	13	13.2	13.4	Pull up or pull down
Input impedance (2.5V)	kΩ	6.9	7.0	7.1	Pull up and pull down

CS100 Technical Data

Resistance input

Description	Unit	Minimum	Typical	Maximum	Comment
Range	Ω	5.2	—	10000	In steps of 1 Ω
Measurement error	%	—	—	6.4	100Ω
		—	—	1.9	1kΩ
		—	—	4.9	10kΩ
Input impedance	kΩ	1.32	1.32	1.33	Input impedance to 5V

Outputs

Digital output

Description	Unit	Minimum	Typical	Maximum	Comment
Output Voltage range	V	0	-10.3 -22.3		@Vin=12v & 500ma @Vin= 24V & 500ma
Current	mA	0	—	500	Each output pin capable of driving 500mA. No current limiting; damage may be done if the load pulls more than 500mA.

Warning

DOUT pins have short circuit protection but are NOT current limited. Exceeding 500mA per pin could damage the CS100.

PLUS+1® Connect portal

The CS100 is produced with a pre-installed SIM card and with a default configuration that allows the direct connection of the device to the PLUS+1® Connect portal.

The visibility of the device on the PLUS+1® Connect portal is linked to the activation of the device, if not activated with a specific data plan the device is not visible on the portal.

Connect the device and ensure the device turns on.

The LED light correct sequence:

- The LED lights up green constantly during the first second.
- The LED starts to flash.

Problem with connection to PLUS+1® Connect portal

After connecting to power supply, the LED should then follow the correct sequence. If the LED lights up green and becomes red or stops during one of the steps, there is a problem. Contact the helpdesk or your CS PAE. EID number is required in order to help you.

Packaging and Transport

IP protection rating

IP 67 rating is ensured only with the following guidelines:

- Do not expose the device to dust and water if the connectors are not plugged in.
- Do not immerse the device in water or other liquids.
- Do not operate the device unless temperature is between -40 °C and +75 °C (-40 °F and +167 °F).
- Do not store and/or transport the device unless it is kept at a temperature between -40 °C and +85 °C (-40 °F and +185 °F).

Disposal

Observe national regulations when disposing the device, accessories and its package.

CS100 Technical Drawings

CS100 Dimensions

CS100 dimensions in mm [in]

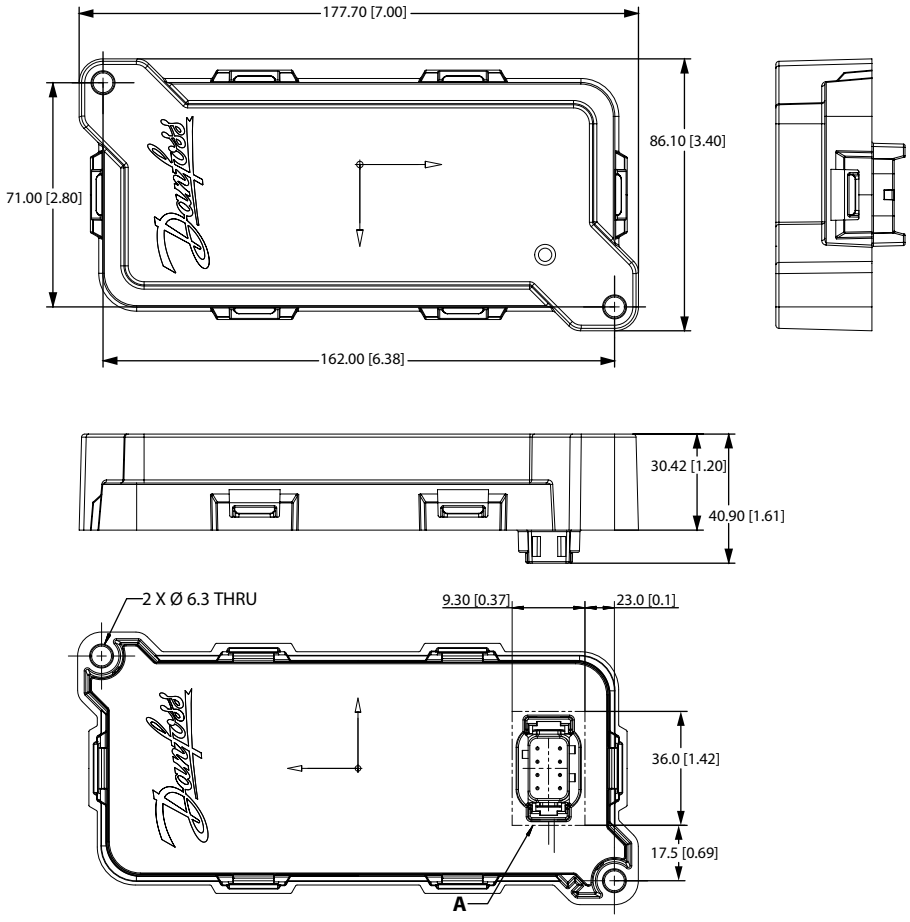

A Minimal panel cutout

CS100 Cable

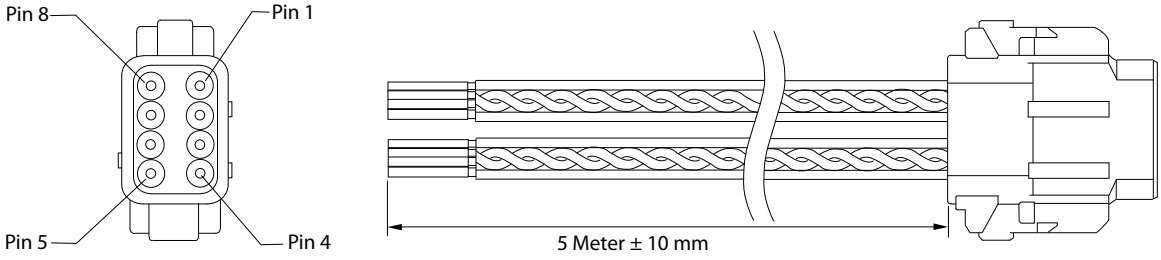

Mounting

The device can be directly bolted into spaced drill holes, see *CS100 Technical Drawings* on page 22. The device can be mounted in any position, *Top Mount* on page 23 is recommended.

The devices have integrated antennas and must be installed properly to the machine to avoid bolt interference and to ensure the recommended line of sight to the sky.
Excessively long bolts, or metallic elements in general, may interfere with radio signal.

Care must be taken to insure that the module connector is positioned so that moisture drains away from the connector. Provide a drip loop in the harness. Provide strain relief for mating connector wires.

Caution

Module damage may occur.
Use caution when installing modules. It's possible to damage the module if excessive pressure is applied during the installation of harness strain relief.

Fasteners

Recommended outer diameter (OD)	Recommended torque
6.0 mm (0.25 in)	2.26 N•m (20 in•lbs)

Inside mount

Simple mounting option

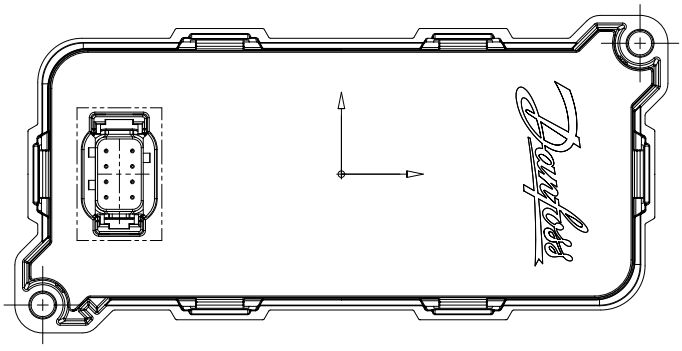

Top Mount

The connector is facing inward through mounting surface, which allows for mounting on top of the machine for best antenna exposure.

Recommended mounting option

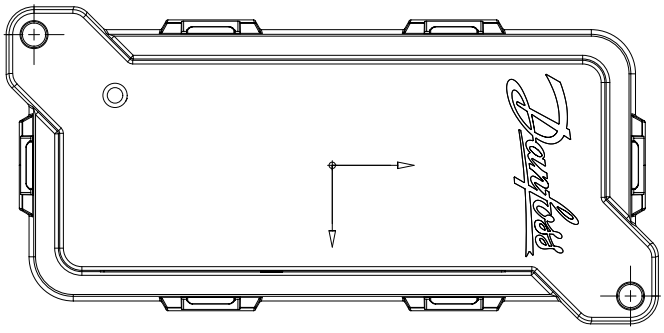

Raises to IP69k rating, when top mounted and connector is plugged in (or suitably capped for protection).

Security Manual

Full Security Compliance

The CS100 Gateway has been developed with a strong focus on cybersecurity. It includes several built-in features designed to help mitigate cybersecurity risks. The following Cybersecurity recommendations are intended to support users in deploying and maintaining the product securely

Secure Local Updates

Only authorized staff should oversee the complete update process of firmware when updating the firmware locally through CAN interface using Plus+1 Connect Service Tool.

Installation

Only authorized staff should oversee the complete update process of firmware when updating the firmware locally through CAN interface using Plus+1 Connect Service Tool.

Diagnosis Port Accessibility

The customer should ensure that the diagnostic port of the overall machine which connects with the device is only accessible by authorized personnel (e.g., Diagnosis port is inside a lock or inside the cabin of the machine).

ENGINEERING
TOMORROW

Products we offer:

- Cylinders
- Electric converters, machines, and systems
- Electronic controls, HMI, and IoT
- Hoses and fittings
- Hydraulic power units and packaged systems
- Hydraulic valves
- Industrial clutches and brakes
- Motors
- PLUS+1® software
- Pumps
- Steering
- Transmissions

Hydro-Gear
www.hydro-gear.com

Daikin-Sauer-Danfoss
www.daikin-sauer-danfoss.com

Danfoss Power Solutions designs and manufactures a complete range of engineered components and systems. From hydraulics and electrification to fluid conveyance, electronic controls, and software, our solutions are engineered with an uncompromising focus on quality, reliability, and safety.

Our innovative products makes increased productivity and reduced emissions a possibility, but it's our people who turn those possibilities into reality. Leveraging our unsurpassed application know-how, we partner with customers around the world to solve their greatest machine challenges. Our aspiration is to help our customers achieve their vision — and to earn our place as their preferred and trusted partner.

Go to www.danfoss.com or scan the QR code for further product information.

Danfoss
Power Solutions (US) Company
2800 East 13th Street
Ames, IA 50010, USA
Phone: +1 515 239 6000

Danfoss
Power Solutions GmbH & Co. OHG
Krokamp 35
D-24539 Neumünster, Germany
Phone: +49 4321 871 0

Danfoss
Power Solutions ApS
Nordborgvej 81
DK-6430 Nordborg, Denmark
Phone: +45 7488 2222

Danfoss
Power Solutions Trading (Shanghai) Co., Ltd.
Building #22, No. 1000 Jin Hai Rd
Jin Qiao, Pudong New District
Shanghai, China 201206
Phone: +86 21 2080 6201

Danfoss can accept no responsibility for possible errors in catalogues, brochures and other printed material. Danfoss reserves the right to alter its products without notice. This also applies to products already on order provided that such alterations can be made without subsequent changes being necessary in specifications already agreed.
All trademarks in this material are property of the respective companies. Danfoss and the Danfoss logotype are trademarks of Danfoss A/S. All rights reserved.