HS-D20 Accelerometer

4-20mA velocity output via 2 Pin MS Connector

Key Features

- For use with compatible VFD Drives
- Customizable features

Industries

Building services, Pulp and Paper, Mining, Metals, Utilities, Automotive, Water, Pharmaceutical



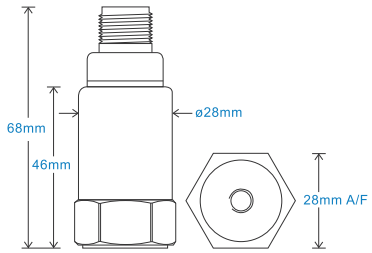

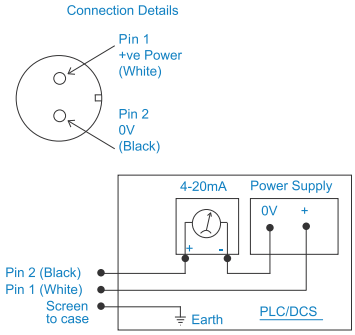

Technical Performance

Mounted Base Resonance	5kHz min
Velocity Ranges	25mm/sec RMS (Other available on request)
	Nominal 80Hz at 22°C
Frequency Response	10Hz (600cpm) to 1kHz (60kcpm) ± 5% - ISO10816
Isolation	Base isolated
Transverse Sensitivity	Less than 5%

Mechanical

Case Material	Stainless Steel
Sensing Element/Construction	PZT/Compression
Mounting Torque	8Nm
Weight	150gms (nominal) body only
Connector	2 Pin MS
Mounting Threads	M8 x 1.25mm Male (Other available on request)

Electrical

Current Output	4-20mA DC proportional to Velocity Range
Supply Voltage	15-30 Volts DC (for 4-20mA)
Settling Time	2 seconds
Output Impedance	Loop Resistance 600 Ohms max. at 24 Volts
Case Isolation	$>10^8$ Ohms at 500 Volts

Environmental

Operating Temperature Range	-25 to 120°C
Sealing	IP68
Maximum Shock	5000g
EMC	EN61326-1:2013

Typical Frequency Response

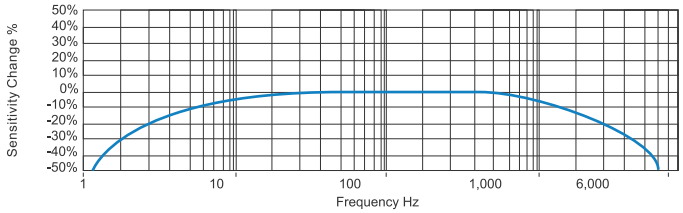

Applications

Fans, Motors, Pumps, Compressors, Centrifuges, Conveyors, Air Handlers, Gearboxes, Rolls, Dryers, Presses, Cooling, VAC, Spindles, Machine Tooling, Process Equipment

Vibration sensor should be firmly fixed to a flat surface (spot face surface may be needed to be produced and cable anchored to sensor body.)

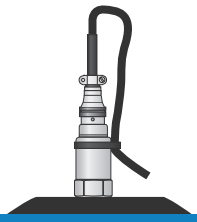

How to order

Product Prefix	Product Series										
HS - Hansford Sensors	D20 - Industrial Vibration Sensor										
H	S	D	2	0	0	2	5	5	0	0	8

Velocity Range (RMS unless specified)	Cable/Connector	Mounting Threads
025 - 25mm/sec RMS	50 - 2 Pin MS	08 - M8 x 1.25mm Male

Part Number

HS-AC334-XXXX

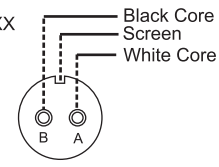

Mounting Cable

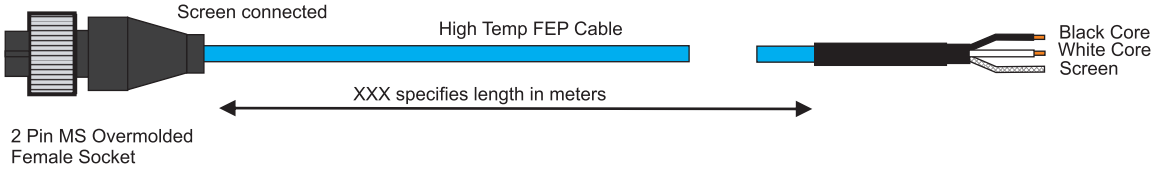

How to order

Product Prefix	Cable Series							Cable Length		
HS - Hansford Sensors	AC - Cable Assembly							001,010,100		
H	S	A	C	3	3	4	X	X	X	X

Cable Number	Blank - Length in meters U - Length in feet
334	X - Length in meters

HS-D20 Accelerometer

4-20mA velocity output via 2 Pin MS Connector

Part Number

Mounting Accessories

HS-AS027-M8

Glue Face



20mm AF

Fin Mount



HS-AS105-1-M8

HS-AS105-2-M8

HS-AS105-3-M8

HS-AS105-4-M8

HS-AM013

2 Pole Magnet



18kg

Ø25mm

HS-AM047

Flat Magnet



25kg

Ø30mm

How Vibration Trending Works

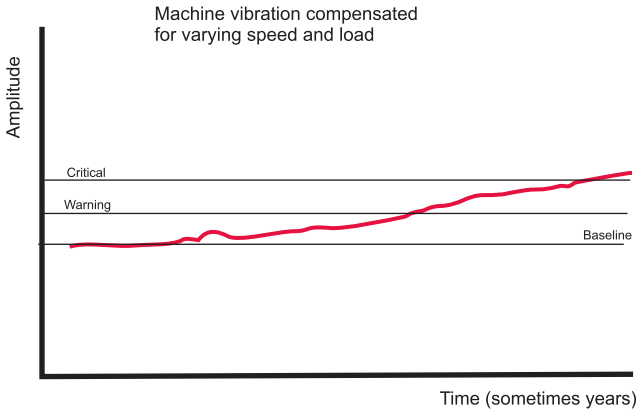

ISO 10816-3 Vibration Levels

Industrial machines with power above 15kW and nominal speeds between 120-15000 r/min				
Unit	Group 1 and 3		Group 2 and 4	
mm/s	Rigid	Flexible	Rigid	Flexible
0-1.4				
1.4-2.3				
2.3-2.8				
2.8-3.5				
3.5-4.5				
4.5-7.1				
7.1-11				
11-				

How to Mount Your Sensor

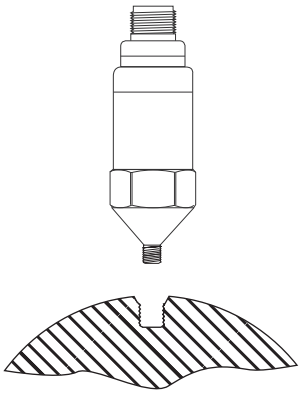

'Installation tolerant' cone connection

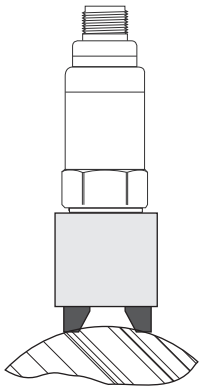

2 pole magnet for curved surfaces

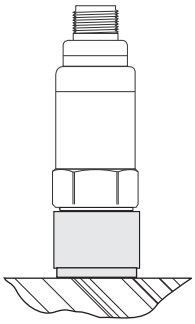

Disk magnet for flat surfaces

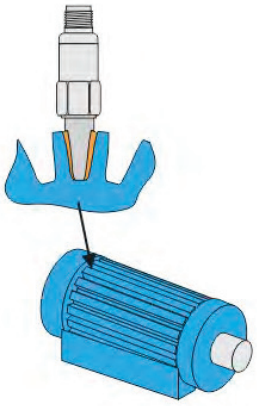

Motor Fin Magnetic Mount

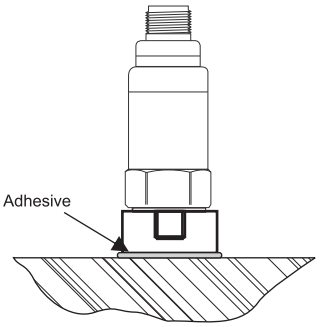

Adhesive mounted glue pad

Typical failure modes that can be detected

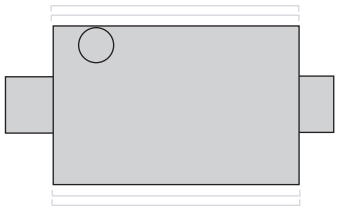

Unbalance

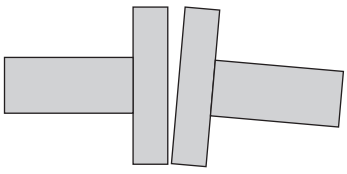

Misalignment

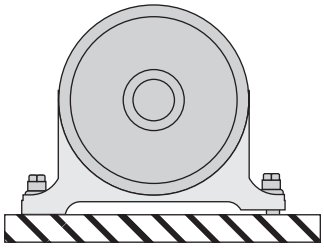

Looseness/Softfoot

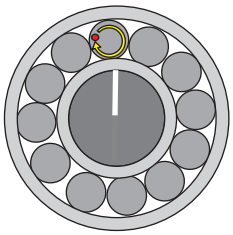

Low Speed Bearing Damage

Hansford Sensors

Excellence in Vibration Monitoring

www.hansfordsensors.com
sales@hansfordsensors.com

We reserve the right to alter the specification of this product without prior notice

TS1026.1