ENGINEERING
TOMORROW

User Guide

Controller for evaporator control
AK-CC 750

ADAP-KOOL® Refrigeration control systems

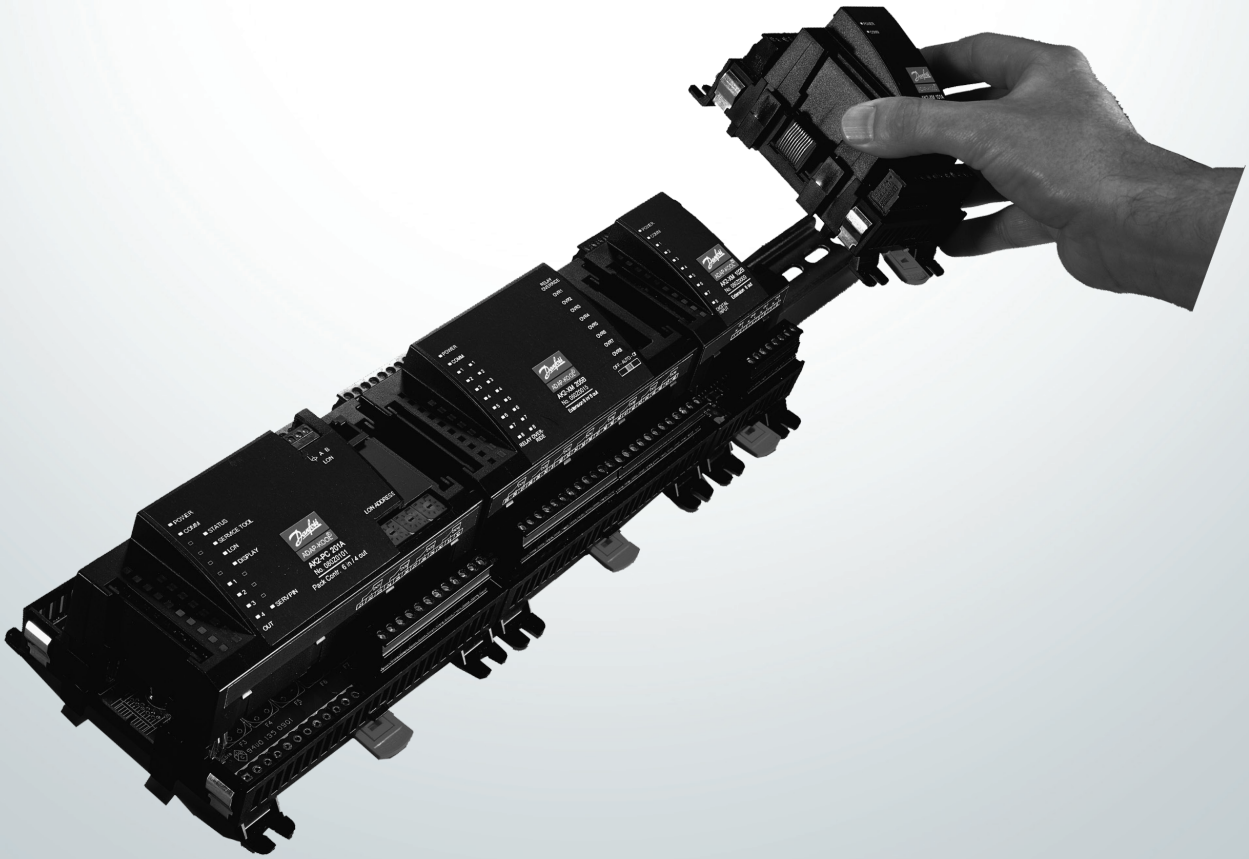

Contents

1. Introduction ... 3
Application ... 3
Principles ... 4
2. Design of a controller ... 7
Module survey ... 8
Common data for modules ... 10
Controller ... 12
Extension module AK-XM 101A ... 14
Extension module AK-XM 102A / AK-XM 102B ... 16
Extension module AK-XM 103A ... 18
Extension module AK-XM 204A / AK-XM 204B ... 20
Extension module AK-XM 205A / AK-XM 205B ... 22
Extension module AK-XM 208C ... 24
Extension module AK-OB 110 ... 26
Extension module AK-OB 101A ... 27
Display module EKA 163B / EKA 164B ... 28
Transformer module AK-PS 075 / 150 ... 29
Preface to design ... 30
Functions ... 30
Connections ... 31
Limitations ... 31
Design of a evaporator control ... 32
Procedure: ... 32
Sketch ... 32
Evaporator and refrigerator appliance functions ... 32
Connections ... 34
Planning table ... 35
Length ... 36
Linking of modules ... 36
Determine the connection points ... 37
Connection diagram ... 38
Supply voltage ... 39
Ordering ... 40
3. Mounting and wiring ... 41
Mounting ... 42
Mounting of extension module on the basic module ... 42
Wiring ... 43
4. Configuration and operation ... 45
Configuration ... 47
Connect PC ... 47
Authorization ... 48
Unlock the configuration of the controllers ... 49
System setup ... 50
Set plant type ... 51
Definition of thermostat ... 52
Definition of sections ... 53
Definition of defrost functions ... 54
Definition of common functions ... 55
Setup general alarm inputs ... 57
Setup separate thermostat functions ... 58
Setup separate voltage functions ... 59
Configuration of inputs and outputs ... 60
Set alarm priorities ... 62
Lock configuration ... 64
Check configuration ... 65
Check of connections ... 66
Check of settings ... 67
Installation in network ... 70
First start of control ... 71
Start the control ... 72
Setup logs ... 73
Manual defrost ... 74
5. Regulating functions ... 75
Introduction ... 76
Thermostat function ... 77
Temperature alarms ... 81
Common functions ... 82
General monitoring functions ... 85
Liquid injection ... 86
Defrost ... 87
Miscellaneous ... 92
Information ... 95
Alarm texts ... 96
Appendix - Recommended connection Group 1 ... 98
Appendix - Recommended connection Group 2 ... 102

1. Introduction

Application

AK-CC 750 controllers are complete regulating units which together with valves and sensors constitute complete evaporator controls for refrigeration appliances and freezing rooms within commercial refrigeration.
Generally speaking they replace all other automatic controls containing, inter alia, day and night thermostats, defrost, fan control, rail heat control, alarm functions, light control, thermo valve control, solenoid valve, etc.
The controller is equipped with data communication and is operated via a PC.
In addition to evaporator control the controller can give signals to other controllers about the operating condition, e.g. forced closing of expansion valves, alarm signals and alarm messages.

Advantages
- Control of 1 to 4 evaporator sections
- Adaptive superheat control ensures optimum evaporator usage in all operational circumstances.
- Electronic injection with AKV valve or ETS valve
- Traditional temperature regulation using on/off or modulating control of solenoid valve for both DX and indirect brine system.
- Weighted thermostat and alarm thermostat
- Defrost on demand based on evaporator capacity
- Appliance cleaning function
- Light control using door switch or network signal depending on day/night operation
- Rail heat pulsing depending on day/night operation or dew point
- Monitoring of door alarm and control of light/refrigeration depending on location of door switch.
- Log function for registration of historical parameter values and alarm modes.

Control
The controller's main function is to control the evaporator so that the system constantly operates with the most energy-friendly refrigeration.
A specific function for registration of the need for defrost will adapt the number of defrosts so that no energy is wasted on unnecessary defrosts and subsequent cooling-down cycles.

Adaptive defrosting
The AK-CC 750 includes an adaptive defrosting function. By using the injection valves opening degree as mass flow sensor for the supply of refrigerant, the controller can monitor ice formation on the evaporator. If the load is too large for the standard defrost programme, the controller initiates additional automatic defrost cycles to eliminate the need for expensive service calls due to iced-up evaporators.

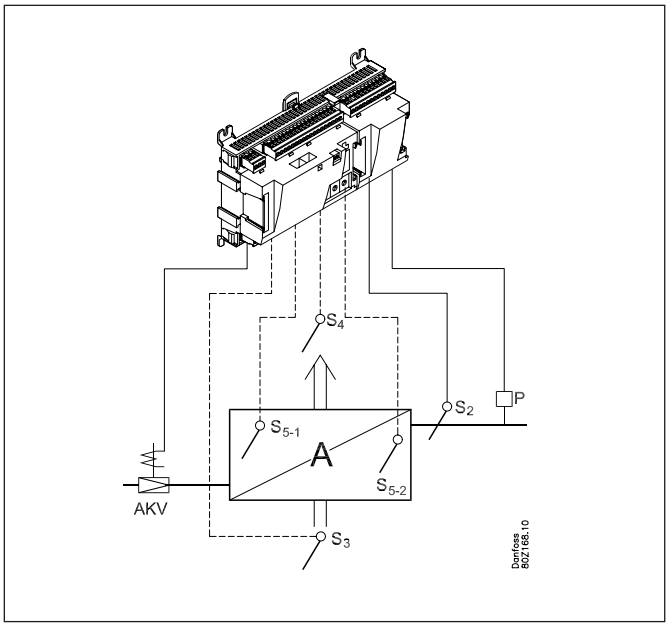

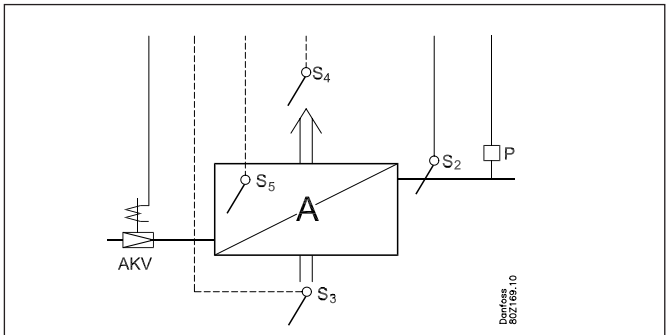

Evaporator control of one, two, three or four evaporators

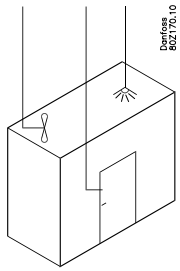

Control of cool or frost room

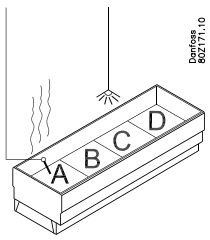

Control of cool or frost appliance

SW = 6.6x

Principles

The great advantage of this series of controllers is that it can be extended as the size of the plant is increased. It has been developed for refrigeration control systems, but not for any specific application – variation is created through the read-in software and the way you choose to define the connections.
It is the same modules that are used for each regulation and the composition can be changed, as required. With these modules (building blocks) it is possible to create a multitude of various kinds of regulations. But it is you who must help adjusting the regulation to the actual needs – these instructions will assist you to find your way through all the open questions so that the regulation can be defined and the connections made.

Advantages

- The controller's size can "grow" as systems grow
- The software can be set for one or more regulations
- Several regulations with the same components
- Extension-friendly when systems requirements are changed
- Flexible concept:
  - Controller series with common construction
  - One principle – many regulation uses
  - Modules are selected for the actual connection requirements
  - The same modules are used from regulation to regulation

Controller

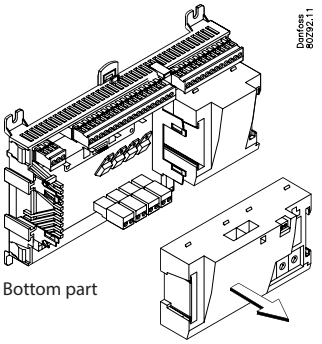

The controller is the cornerstone of the regulation. The module has inputs and outputs capable of handling small systems.

- The bottom part – and hence the terminals – are the same for all controller types.
- The top part is the intelligence with software. This unit will vary according to controller type. But it will always be supplied together with the bottom part.
- In addition to the software the top part is provided with connection for data communication and address setting.

Extension modules

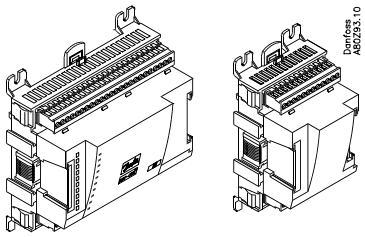

If the system grows and more functions have to be controlled, the regulation can be extended.
With extra modules more signals can be received and more relays cut in and out – how many of them – and which – is determined by the relevant application.

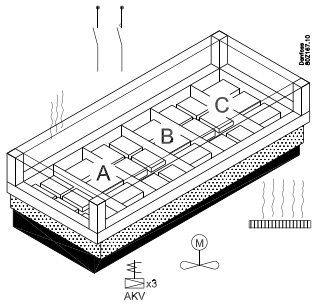

Examples

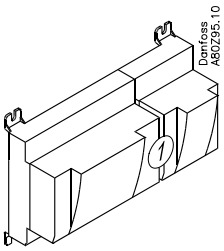

A regulation with few connections can be performed with the controller module alone

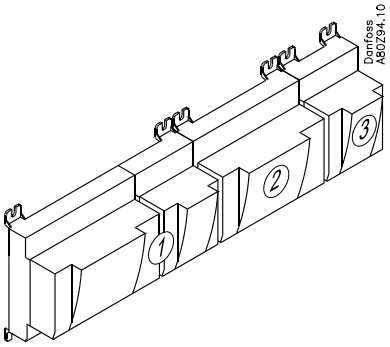

If there are many connections one or more extension modules have to be mounted

Direct connection

Setup and operation of an AK controller must be accomplished via the "AK-Service Tool" software program.

The programme is installed on a PC, and setup and operation of the various functions are carried out via the controller's menu displays.

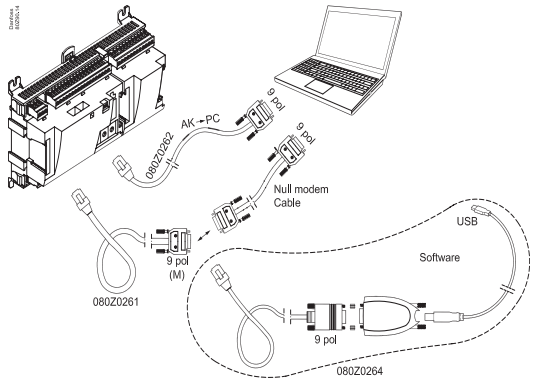

Displays

The menu displays are dynamic, so that different settings in one menu will result in different setting possibilities in other menus.

A simple application with few connections will give a setup with few settings.
A corresponding application with many connections will give a setup with many settings.
From the overview display there is access to further displays for the regulation.
At the bottom of the display there is access to a number of general functions, such as "time table", "manual operation", "log function", "alarms", and "service" (configuration).

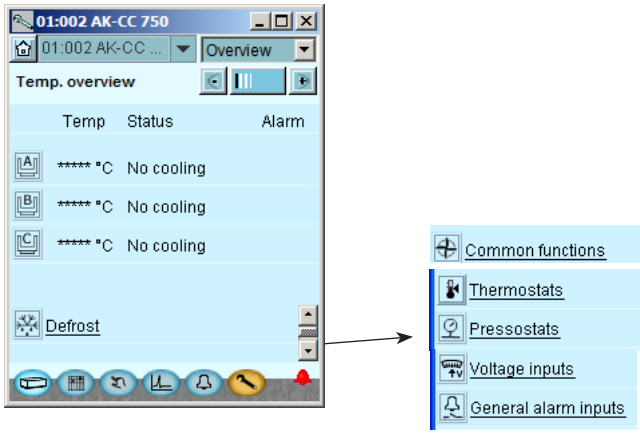

Network linking

The controller can be linked up into a LON-network together with other controllers in an ADAP-KOOL® refrigeration control system.

After the setup operation can be performed at a distance with, say, our software program type AKM.

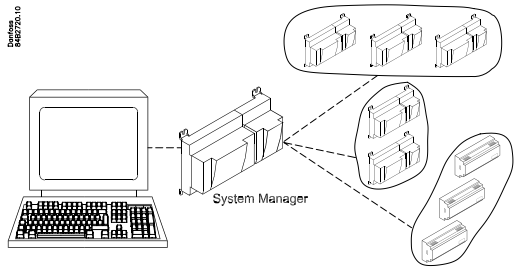

Users

The controller comes supplied with several languages, one of which can be selected and employed by the user. If there are several users, they may each have their choice of language. All users must be assigned a user profile which either gives access to full operation or gradually limits the operation to the lowest level that only allows you "to see".

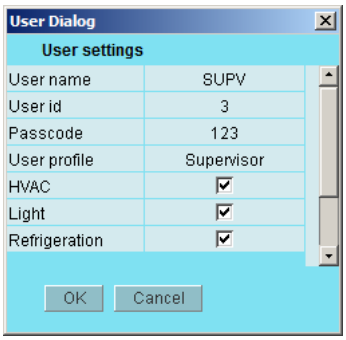

External display

An external display can be fitted in order to show the air temperatures around the evaporators.
In AK-CC 750 up to 4 displays can be mounted.

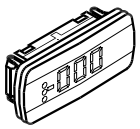

Light-emitting diodes

A number of light-emitting diodes makes it possible to follow the signals that are received and transmitted by the controller.

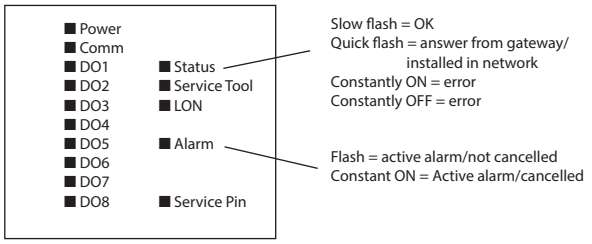

Log

From the log function you can define the measurements you wish to be shown.
The collected values can be printed, or you may export them to a file. You can open the file in Excel or import in AKM.
(The Log function is only available via AK-ST 500.)

If you are in a service situation you can show measurements in a trend function. The measurements are then made real-time and displayed instantly.

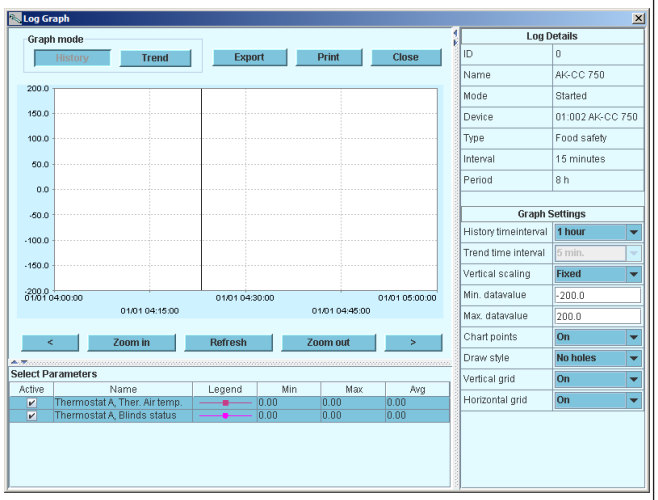

Alarm

The display gives you an overview of all active alarms. If you wish to confirm that you have seen the alarm you can cross it off in the acknowledge field.
If you want to know more about a current alarm you can click on it and obtain an information display on the screen.

A corresponding display exists for all earlier alarms. Here you can upload information if you need further details about the alarm history.

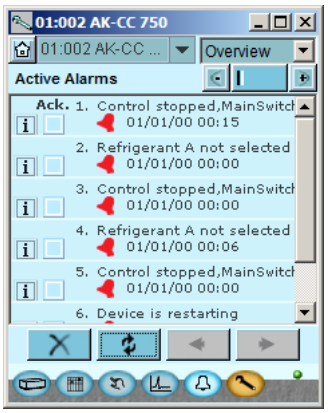

Adaptive defrost

AK-CC 750 is equipped with an adaptive defrost function. By using an AKV valve (ETS Valve) as mass flow sensor for the supply of refrigerant the control can monitor ice formation on the evaporator. Function can cancel planned defrosts which are not necessary, and on its own initiative start a defrost if the evaporator is about to be blocked by rime and ice.

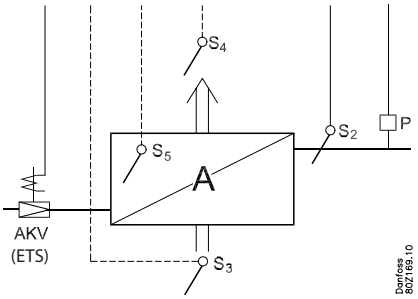

2. Design of a controller

This section describes how the controller is designed.

The controller in the system is based on a uniform connection platform where any deviations from regulation to regulation is determined by the used top part with a specific software and by which input and output signals the relevant application will require. If it is an application with few connections, the controller module (top part with belonging bottom part) may be sufficient. If it is an application with many connections it will be necessary to use the controller module plus one or more extension modules.

This section will give you a survey of possible connections plus assistance in selecting the modules required by your actual application.

Module survey

- Controller module – capable of handling minor plant requirements.

- Extension modules. When the numbers of evaporators becomes greater and additional inputs or outputs are required, modules can be attached to the controller. A plug on the side of the module will transmit the supply voltage and data communication between the modules.

- Top part
  The upper part of the controller module contains the intelligence. This is the unit where the regulation is defined and where data communication is connected to other controllers in a bigger network.

- Connection types
  There are various types of inputs and outputs. One type may, for example, receive signals from sensors and switches, another may receive a voltage signal, and a third type may be outputs with relays etc. The individual types are shown in the table below.

- Optional connection
  When a regulation is planned (set up) it will generate a need for a number of connections distributed on the mentioned types. This connection must then be made on either the controller module or an extension module. The only thing to be observed is that the types must not be mixed (an analog input signal must for instance not be connected to a digital input).

- Programming of connections
  The controller must know where you connect the individual input and output signals. This takes place in a later configuration where each individual connection is defined based on the following principle:
  - to which module
  - at which point ("terminals")
  - what is connected (e.g. pressure transmitter/type/ pressure range)

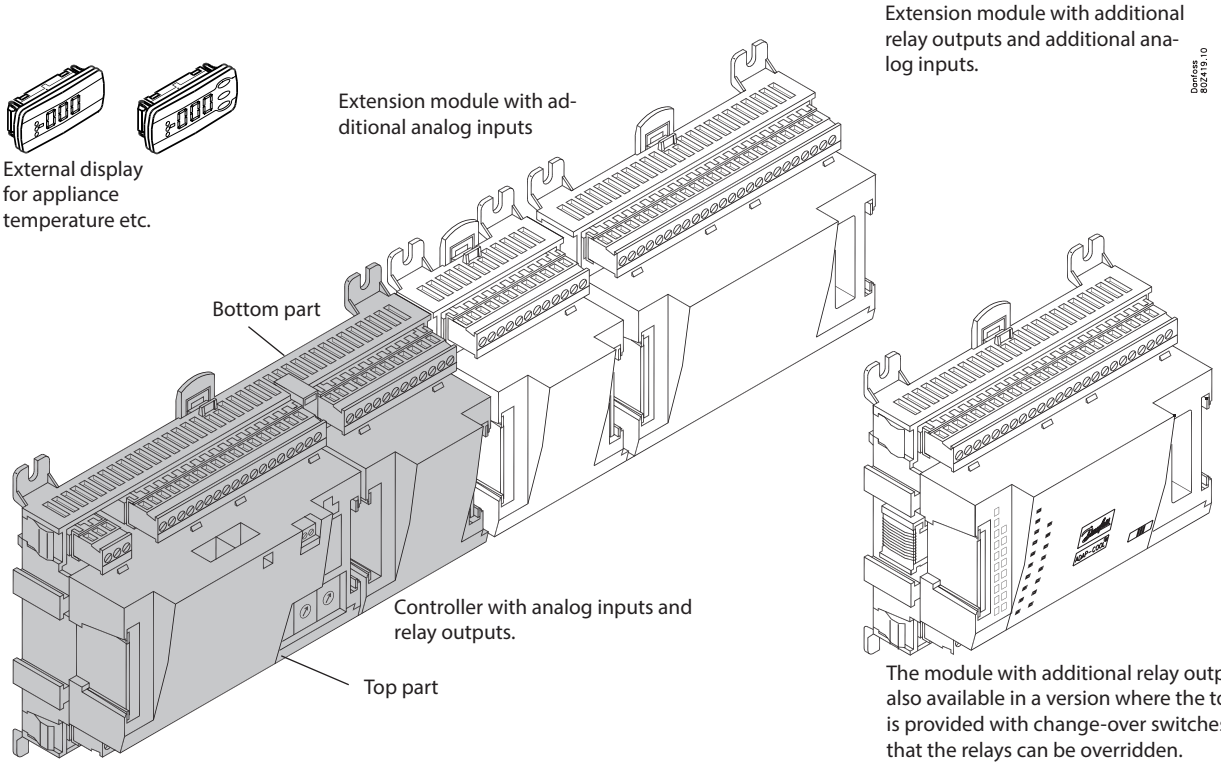

1. Controller

Type	Function	Application
AK-CC 750	Controller for evaporator control	Refrigeration appliances control

2. Extension modules and survey of inputs and outputs

Type	Analog inputs	On/Off outputs		On/off supply voltage (DI signal)		Analoge outputs	Stepper output	Module with switches
	For sensors, pressure transmitters etc.	Relay (SPDT)	Solid state	Low voltage (max. 80 V)	High voltage (max. 260 V)	0 -10 V d.c.	For valves with step control	For override of relay outputs
Controller	11	4	4	-	-	-		-
Extension modules								
AK-XM 101A	8							
AK-XM 102A				8				
AK-XM 102B					8			
AK-XM 103A	4					4		
AK-XM 204A		8						
AK-XM 204B		8						x
AK-XM 205A	8	8						
AK-XM 205B	8	8						x
AK-XM 208C	8						4	
The following extension module can be placed on the PC board in the controller module. There is only room for one module.								
AK-OB 110						2		

3. AK operation and accessories

Type	Function	Application
Operation		
AK-ST 500	Software for operation of AK controllers	AK-operation
-	Cable between PC and AK controller	AK - Com port
-	Cable between zero modem cable and AK controller / Cable between PDA cable and AK controller	AK - RS 232
-	Cable between PC and AK controller	AK - USB
Accessories	**Transformer module 230 V / 115 V to 24 V**	
AK-PS 075	18 VA, 24 V d.c.	Supply for controller
AK-PS 150	36 VA, 24 V d.c.	
Accessories	**External display that can be connected to the controller module. For showing, say, the refrigeration appliances**	
EKA 163B	Display	
EKA 164B	Display with operation buttons	
-	Cable between display and controller	Length = 2 m
		Length = 6 m
Accessories	**Real time clock for use in controllers that require a clock function, but are not wired with data communication.**	
AK-OB 101A	Real time clock with battery backup.	To be mounted in an AK controller

On the following pages there is data specific to each module.

Common data for modules

Supply voltage	24 V d.c. / a.c. +/- 20%	
Power consumption	AK-__ (controller)	8 VA
	AK-XM 101, 102, 103	2 VA
	AK-XM 204, 205, 208	5 VA
Analog inputs	Pt 1000 ohm /0°C	Resolution: 0.1°C Accuracy: +/- 0.5°C (between -50°C and +50°C) +/- 1°C between -100°C and -50°C +/- 1°C between +50°C and +130°C
	PTC 1000 ohm /0°C	
	Pressure transmitter type AKS 32R / AKS 2050 / AKS 32 (1-5 V)	Resolution:1 mV Accuracy +/- 10 mV Max. connection of 5 pressure transmitters on one module
	Voltage signal 0-10 V	
	Contact function (On/Off)	On at R < 20 ohm Off at R > 2K ohm (Gold -plated contacts not necessary)
On/off supply voltage inputs	Low voltage 0 / 80 V a.c./d.c.	Off: U < 2 V On: U > 10 V
	High voltage 0 / 260 V a.c.	Off: U < 24 V On: U > 80 V
Relay outputs SPDT	AC-1 (ohmic)	4 A
	AC-15 (inductive)	3 A
	U	Min. 24 V Max. 230 V Low and high voltage must not be connected to the same output group
Solid state outputs	Can be used for loads that are cut in and out frequently, e.g. : rail heat, fans and AKV valve	Max. 240 V a.c. , Min. 48 V a.c. Max. 0.5 A, Leak < 1 mA Max. 1 AKV
Ambient temperature	During transport	-40 to 70°C
	During operation	-20 to 55°C , 0 to 95% RH (non condensing) No shock influences / vibrations
Enclosure	Material	PC / ABS
	Density	IP10 , VBG 4
	Mounting	For mounting on panel wall or DIN rail
Weight with screw terminals	modules in100- / 200- / controller-series	Ca. 200 g / 500 g / 600 g
Approvals	EU low voltage directive and EMC requirements are complied with	LVD tested according to EN 60730 EMC tested Immunity according to EN 61000-6-2 Emission according to EN 61000-6-3
	UL 873, c UL us	UL file number: E166834 for XM-modules UL file number: E31024 for CC-modules

The mentioned data applies to all modules.
If data is specific, this is mentioned together with the module in question.

Capacitive load
The relays cannot be used for the direct connection of capacitive loads such as LEDs and on/off control of EC motors.
All loads with a switch mode power supply must be connected with a suitable contactor or similar.

Dimensions

The module dimension is 72 mm.
Modules in the 100-series consist of one module
Modules in the 200-series consist of two modules
Controllers consist of three modules
The length of an aggregate unit = n x 72 + 8

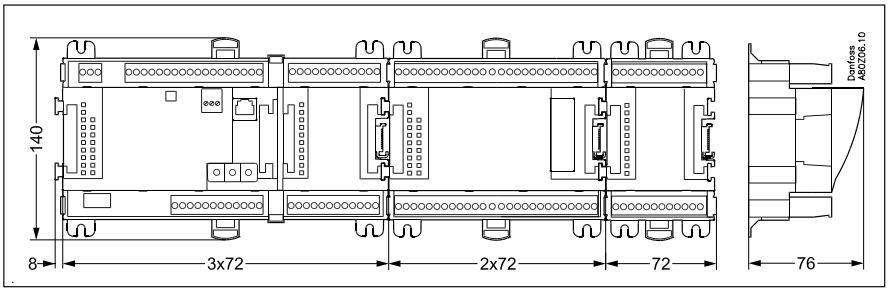

Controller

Function
There are several controllers in the series. The function is determined by the programmed software, but outwardly the controllers are identical – they all have the same connection possibilities:
11 analog inputs for sensors, pressure transmitters, voltage signals and contact signals.
8 digital outputs, with 4 Solid state outputs and 4 relay outputs

Supply voltage
24 V a.c. or d.c. to be connected to the controller.
The 24 V must **not** be retransmitted and used by other controllers as it is not galvanically separated from inputs and outputs. In other words, you **must** use a transformer for each controller. Class II is required. The terminals must **not** be earthed.
The supply voltage to any extension modules is transmitted via the plug on the right-hand side.
The size of the transformer is determined by the power requirement of the total number of modules.

The supply voltage to a pressure transmitter can be taken either from the 5 V output or from the 12 V output depending on transmitter type.

Data communication
If the controller is to be included in a system, communication must take place via the LON connection.
The installation has to be made as mentioned in the separate instructions for LON communication.

Address setting
When the controller is connected to a gateway type AKA 245, the controller's address must be set between 1 and 119. (1-200 at AK-SM..).

Service PIN
When the controller is connected to the data communication cable the gateway must have knowledge of the new controller. This is obtained by pushing the key PIN. The LED "Status" will flash fast when the gateway sends an acceptance message.

Operation
The configuration operation of the controller must take place from the software programme "Service Tool". The program must be installed on a PC, and the PC must be connected to the controller via the network plug on the front of the unit.

Light-emitting diodes
There are two rows with LED's. They mean:
Left row:
- Voltage supply to the controller
- Communication active with the bottom PC board (red = error)
- Status of outputs DO1 to DO8

Right row:
- Software status (slow flash = OK)
- Communication with Service Tool
- Communication on LON
- Alarm when LED flashes
- 3 LED's that are not used
- "Service Pin" switch has been activated

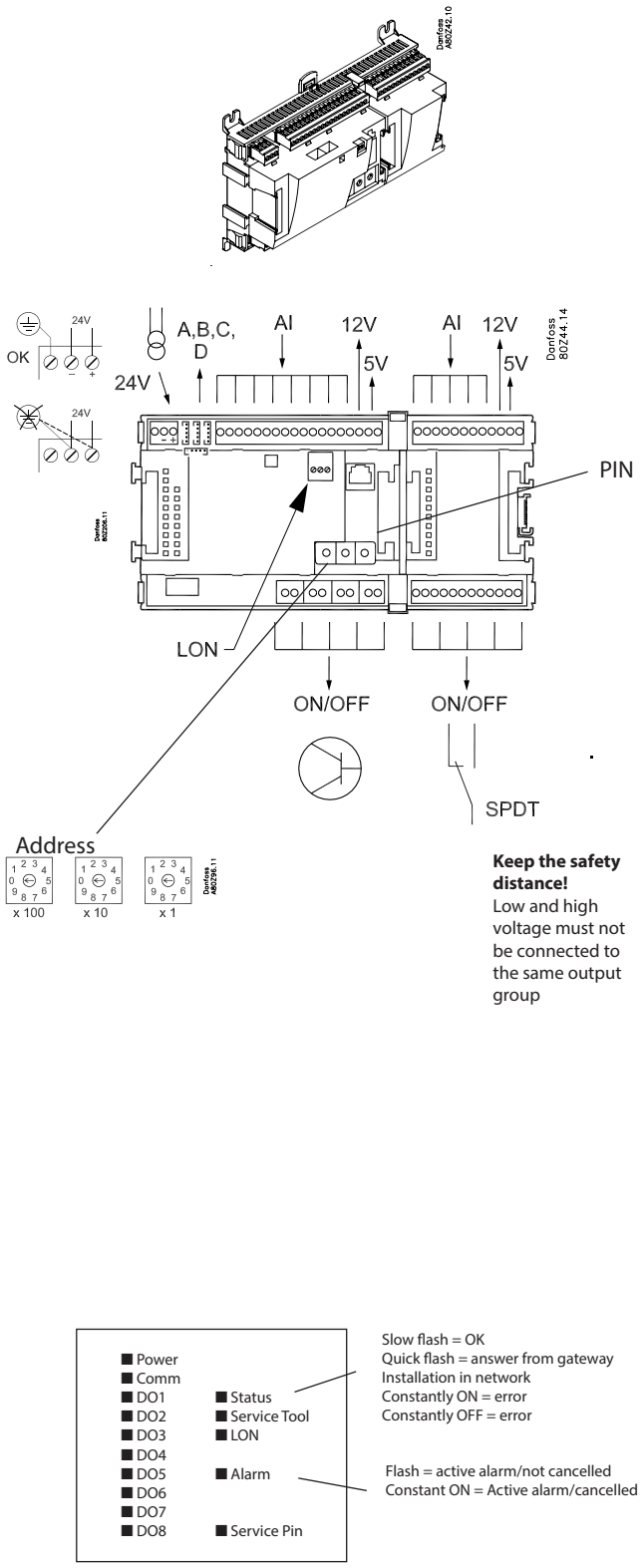

Point

Point	1	2	3	4	5	6	7	8	9	10	11
Type	AI1	AI2	AI3	AI4	AI5	AI6	AI7	AI8	AI9	AI10	AI11

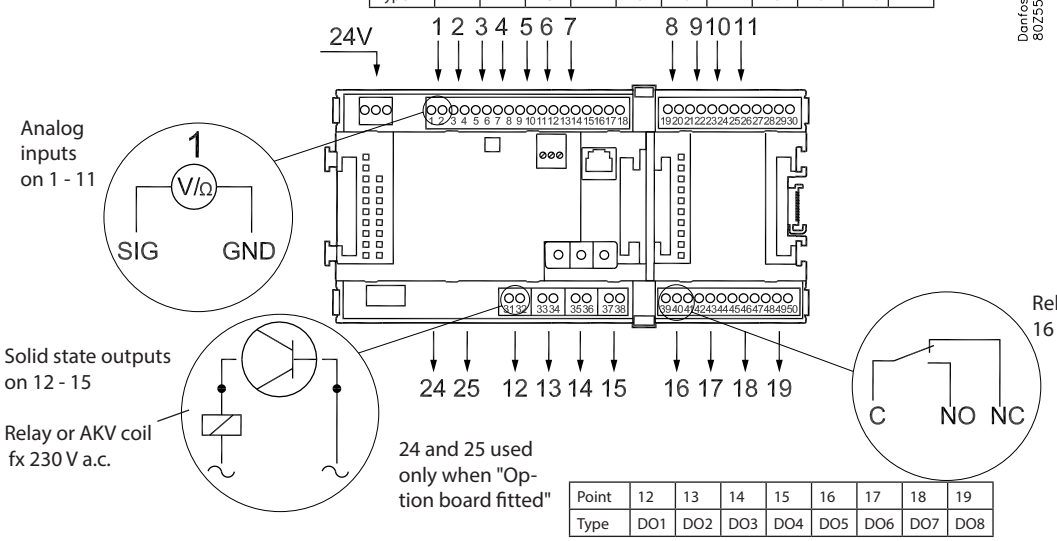

Terminal 15: 12 V
Terminal 16: 5 V

Terminal 27: 12 V
Terminal 28: 5 V

Terminal 17, 18, 29, 30: (Cable screen)

Point	12	13	14	15	16	17	18	19
Type	DO1	DO2	DO3	DO4	DO5	DO6	DO7	DO8

	Signal	Signal type
S Pt 1000 ohm/0°C SIG GND	S2, S3 S4, S5 Saux	Pt 1000
P AKS 32R AKS 2050 3: Brown SIG 2: Blue GND 1: Black 5V AKS 32 3: Brown SIG 2: Black GND 1: Red 12V	P0 Pc Paux	AKS 32R AKS 2050 -1 - xx bar AKS 32 -1 - zz bar
U + SIG – GND	...	0 - 5 V 0 - 10 V
On/Off SIG GND	Ext. Main switch Day/ Night Door Defrost	**Active at:** Closed / Open
DO AKV C NO NC	AKV Fan Alarm Light Rail heat Defrost Night blind Valves Compres- sor	**Active at:** On / Off
Option Board	Please see the signal on the page with the module.	

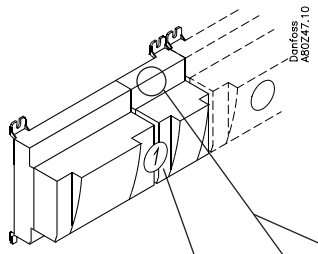

Signal	Module	Point	Terminal	Signal type / Active at
	1	**1** (AI 1)	**1 - 2**	
		2 (AI 2)	**3 - 4**	
		3 (AI 3)	**5 - 6**	
		4 (AI 4)	**7 - 8**	
		5 (AI 5)	**9 - 10**	
		6 (AI 6)	**11 - 12**	
		7 (AI 7)	**13 - 14**	
		8 (AI 8)	**19 - 20**	
		9 (AI 9)	**21 - 22**	
		10 (AI 10)	**23 - 24**	
		11 (AI 11)	**25 - 26**	
		12 (DO 1)	**31 - 32**	
		13 (DO 2)	**33 - 34**	
		14 (DO 3)	**35 - 36**	
		15 (DO 4)	**37 - 38**	
		16 (DO 5)	**39 - 40- 41**	
		17 (DO6)	**42 - 43 - 44**	
		18 (DO7)	**45 - 46 - 47**	
		19 (DO8)	**48 - 49 - 50**	
		24	**-**	
		25	**-**	

Extension module AK-XM 101A

Function
The module contains 8 analog inputs for sensors, pressure transmitters, voltage signals and contact signals.

Supply voltage
The supply voltage to the module comes from the previous module in the row.

Supply voltage to a pressure transmitter can be taken from either the 5 V output or the 12 V output depending on transmitter type.

Light-emitting diodes
Only the two top LED's are used. They indicate the following:
• Voltage supply to the module
• Communication with the controller is active (red = error)

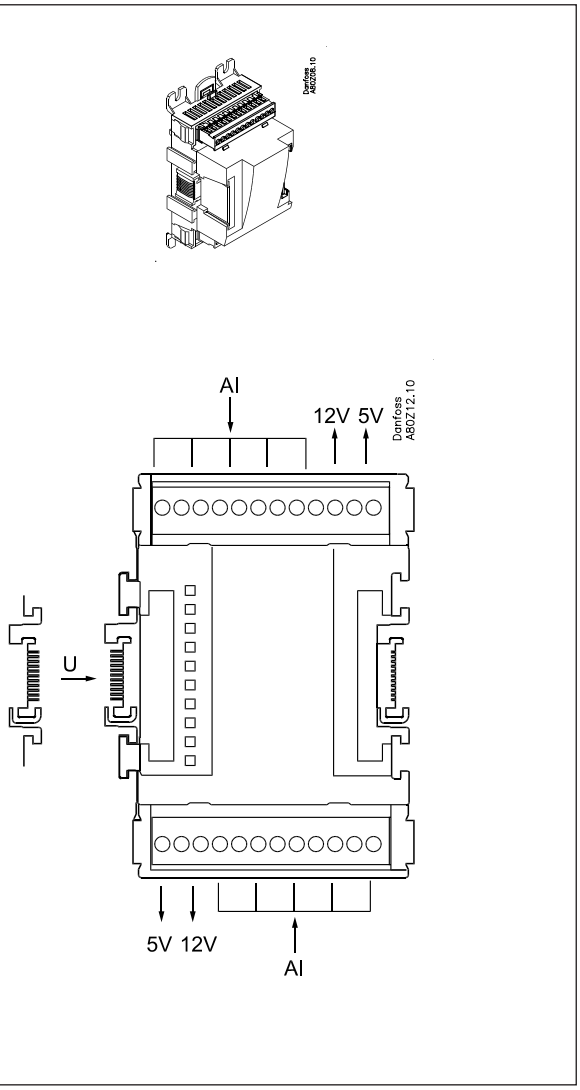

Point

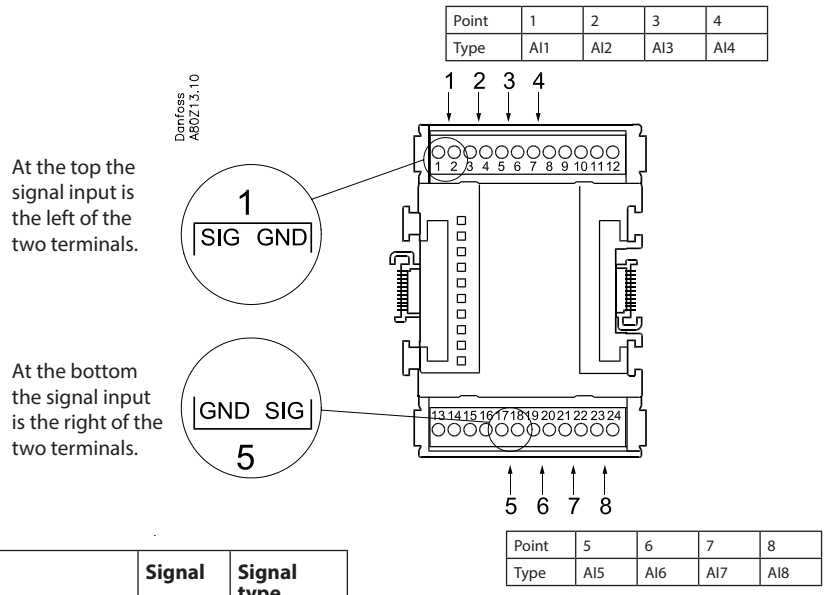

Terminal 9: 12 V
Terminal 10: 5 V

Terminal 15: 5 V
Terminal 16: 12 V

Terminal
11, 12, 13, 14:
(Cable screen)

	Signal	Signal type
S Pt 1000 ohm/0°C SIG GND	S2 S3 S4 S5 Saux	Pt 1000
P AKS 32R AKS 2050 3: Brown SIG 2: Blue GND 1: Black 5V AKS 32 3: Brown SIG 2: Black GND 1: Red 12V	P0 Pc Paux	AKS 32R AKS 2050 -1 - xx bar AKS 32 -1 - zz bar
U + SIG – GND	...	0 - 5 V 0 - 10 V
On/Off SIG GND	Ext. Main switch Day/ Night Door Defrost	**Active at:** Closed / Open

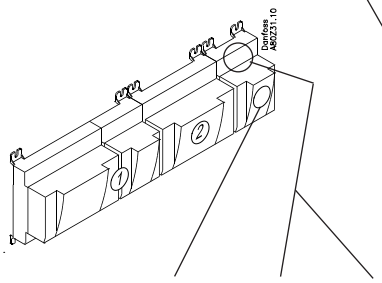

Signal	Module	Point	Terminal	Signal type / Active at
		1 (AI 1)	**1 - 2**	
		2 (AI 2)	**3 - 4**	
		3 (AI 3)	**5 - 6**	
		4 (AI 4)	**7 - 8**	
		5 (AI 5)	**17 - 18**	
		6 (AI 6)	**19 - 20**	
		7 (AI 7)	**21 - 22**	
		8 (AI 8)	**23 - 24**	

Extension module AK-XM 102A / AK-XM 102B

Function
The module contains 8 inputs for on/off voltage signals.

Signal
AK-XM 102A is for low voltage signals.
AK-XM 102B is for high voltage signals.

Supply voltage
The supply voltage to the module comes from the previous module in the row.

Light-emitting diodes
They indicate:
- Voltage supply to the module
- Communication with the controller is active (red = error)
- Status of the individual inputs 1 to 8 (when lit = voltage)

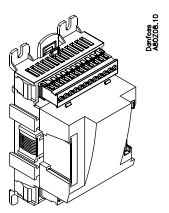

	AK-XM 102A	AK-XM 102B
	Max. 24 V	**Max. 230 V**
	On/Off:	On/Off:
	On: DI > 10 V a.c.	On: DI > 80 V a.c.
	Off: DI < 2 V a.c.	Off: DI < 24 V a.c.

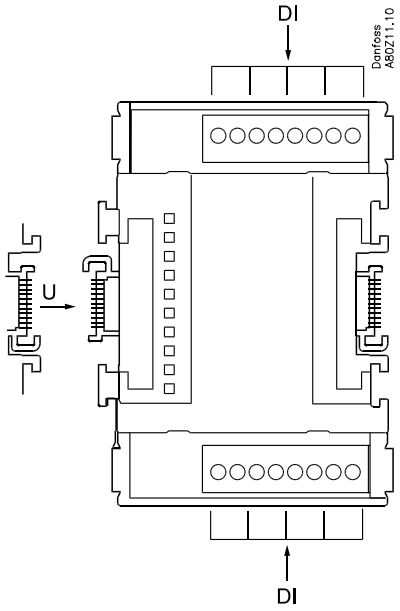

Point

Point	1	2	3	4
Type	DI1	DI2	DI3	DI4

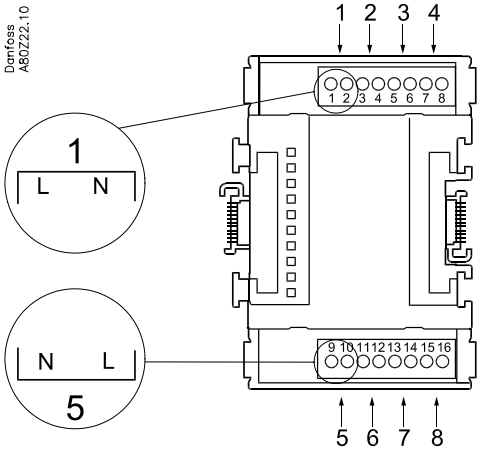

Point	5	6	7	8
Type	DI5	DI6	DI7	DI8

	Signal	Active at
DI **AK-XM 102A: Max. 24 V** **AK-XM 102B: Max. 230 V**	Ext. Main switch Day/ Night Door Defrost	**Closed** (voltage on) / **Open** (voltage off)

(The module can not register a pulse signal from e.g. a reset function or a case cleaning function.)

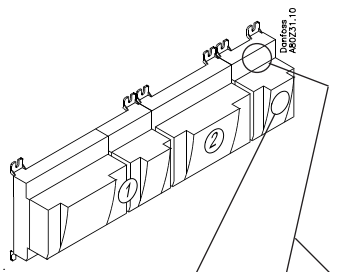

Signal	Module	Point	Terminal	Active at
		1 (DI 1)	**1 - 2**	
		2 (DI 2)	**3 - 4**	
		3 (DI 3)	**5 - 6**	
		4 (DI 4)	**7 - 8**	
		5 (DI 5)	**9 - 10**	
		6 (DI 6)	**11 - 12**	
		7 (DI 7)	**13 - 14**	
		8 (DI 8)	**15 - 16**	

Extension module AK-XM 103A

Function
The module contains :
4 analog inputs for sensors, pressure transmitters, voltage signals and contact signals.
4 analog voltage outputs of 0 - 10 V

Supply voltage
The supply voltage to the module comes from the previous module in the row.

Supply voltage to a pressure transmitter can be taken from either the 5 V output or the 12 V output depending on transmitter type.

Galvanic isolation
The inputs are galvanically separated from the outlets.
The outlets AO1 and AO2 are galvanically separated from AO3 and AO4.

Light-emitting diodes
Only the two top LED's are used. They indicate the following:
• Voltage supply to the module
• Communication with the controller is active (red = error)

Max. load
I < 2.5 mA
R > 4 kΩ

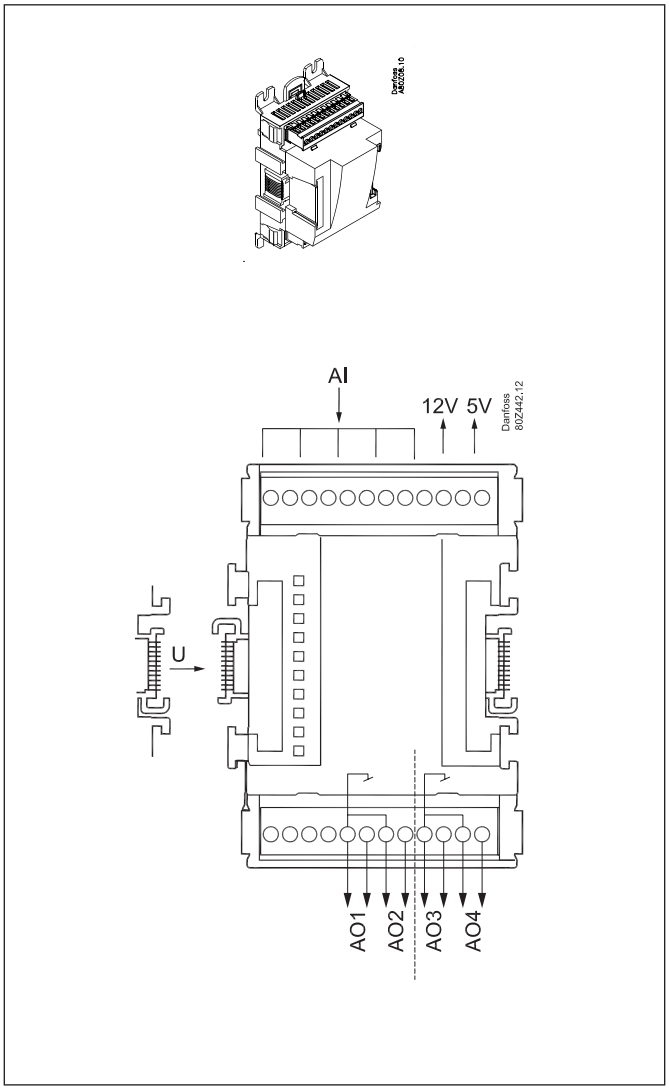

Point

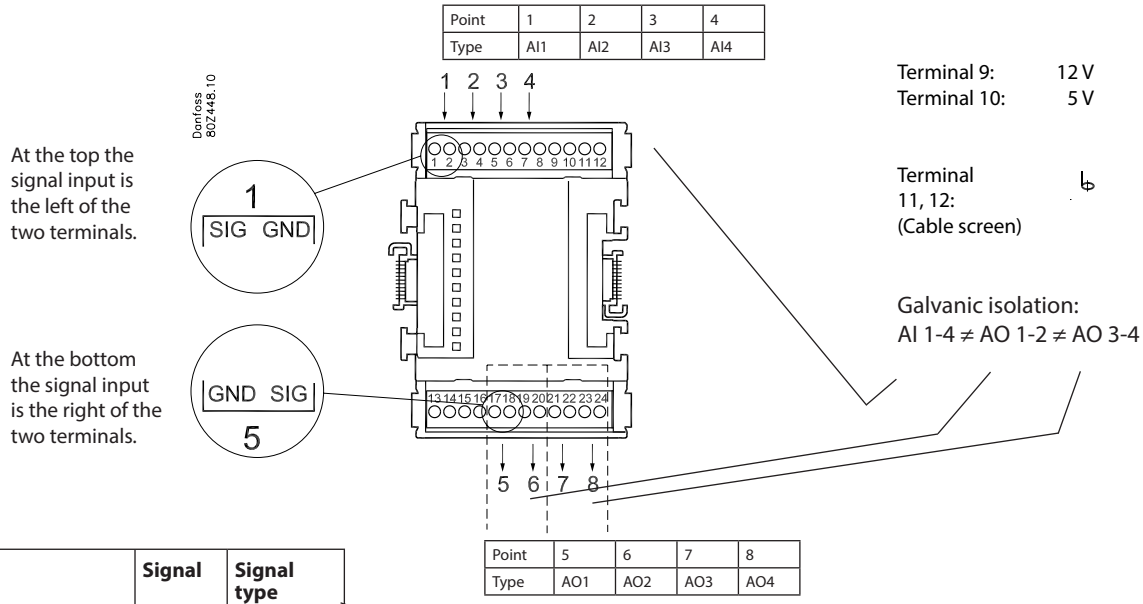

	Signal	Signal type
S Pt 1000 ohm/0°C SIG GND	S2 S3 S4 S4 S5 Saux	Pt 1000
P AKS 32R 3: Brown SIG 2: Blue GND 1: Black 5V AKS 32 3: Brown SIG 2: Black GND 1: Red 12V	P0 Paux	AKS 32R / AKS 2050 -1 - xx bar AKS 32 -1 - zz bar
U + SIG – GND	...	0 - 5 V 0 - 10 V
On/Off SIG GND	Ext. Main switch Day/ Night Door Level switch	**Active at:** Closed / Open
AO – 0-10 V +		0-10 V

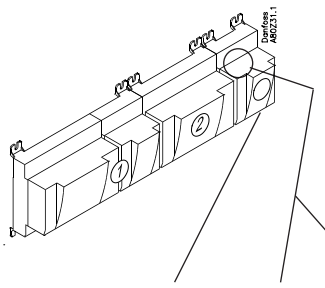

Signal	Module	Point	Terminal	Signal type /Active at
		1 (AI 1)	**1 - 2**	
		2 (AI 2)	**3 - 4**	
		3 (AI 3)	**5 - 6**	
		4 (AI 4)	**7 - 8**	
		5 (AO 1)	**17 - 18**	
		6 (AO 2)	**19 - 20**	
		7 (AO 3)	**21 - 22**	
		8 (AO 4)	**23 - 24**	

Extension module AK-XM 204A / AK-XM 204B

Function
The module contains 8 relay outputs.

Supply voltage
The supply voltage to the module comes from the previous module in the row.

AK-XM 204B only
Override of relay
Eight change-over switches at the front make it possible to override the relay's function.
Either to position OFF or ON.
In position Auto the controller carries out the control.

Light-emitting diodes
There are two rows with LED's. They indicate the following:
Left row:
- Voltage supply to the controller
- Communication active with the bottom PC board (red = error)
- Status of outputs DO1 to DO8

Right row: (AK-XM 204B only):
- Override of relays
  ON = override
  OFF = no override

Fuses
Behind the upper part there is a fuse for each output.

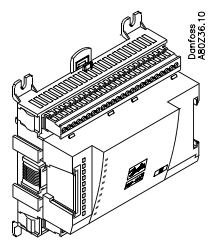

AK-XM 204A

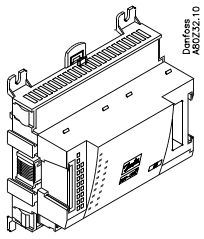

AK-XM 204B

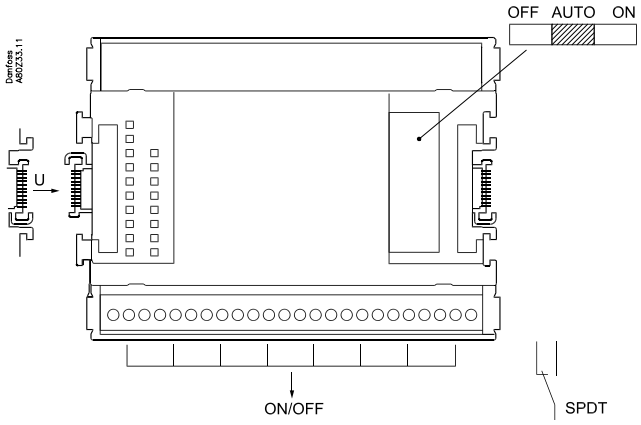

Max. 230 V
AC-1: max. 4 A (ohmic)
AC-15: max. 3 A (Inductive)

Keep the safety distance!
Low and high voltage must not be connected to the same output group

AK-XM 204B
Override of relay

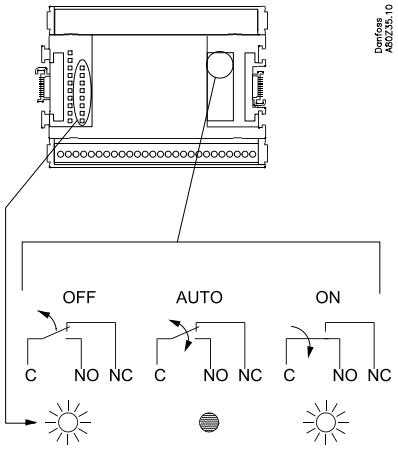

Point

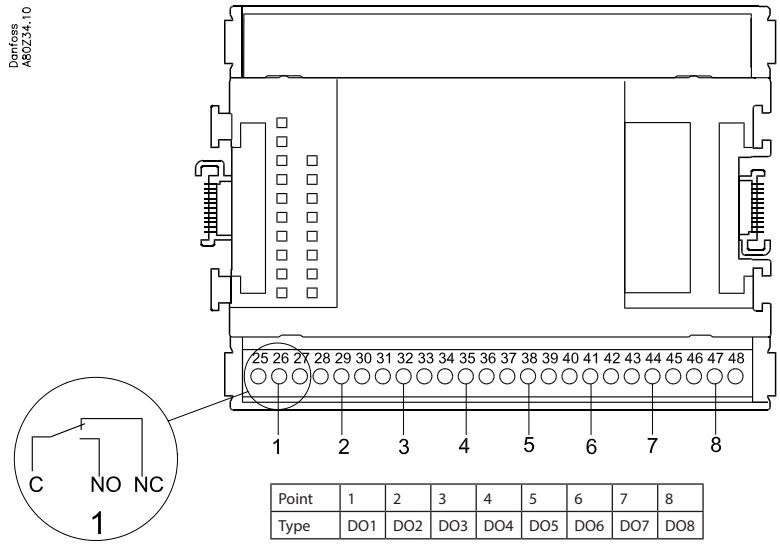

Point	1	2	3	4	5	6	7	8
Type	DO1	DO2	DO3	DO4	DO5	DO6	DO7	DO8

	Signal	Active at
DO 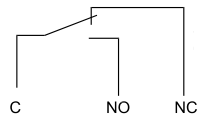	Fan Alarm Light Railheat Defrost Night blind Valve Compres-sor	On / Off

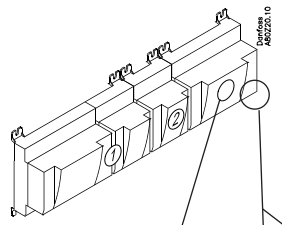

Signal	Module	Point	Terminal	Active at
		1 (DO 1)	**25 - 27**	
		2 (DO 2)	**28 - 30**	
		3 (DO 3)	**31 - 33**	
		4 (DO 4)	**34 -36**	
		5 (DO 5)	**37 - 39**	
		6 (DO 6)	**40 - 41 - 42**	
		7 (DO 7)	**43 - 44 - 45**	
		8 (DO 8)	**46 - 47 - 48**	

Extension module AK-XM 205A / AK-XM 205B

Function
The module contains:
8 analog inputs for sensors, pressure transmitters, voltage signals and contact signals.
8 relay outputs.

Supply voltage
The supply voltage to the module comes from the previous module in the row.

AK-XM 205B only
Override of relay
Eight change-over switches at the front make it possible to override the relay's function.
Either to position OFF or ON.
In position Auto the controller carries out the control.

Light-emitting diodes
There are two rows with LED's. They mean:
Left row:
- Voltage supply to the controller
- Communication active with the bottom PC board (red = error)
- Status of outputs DO1 to DO8

Right row: (AK-XM 205B only):
- Override of relays
  ON = override
  OFF = no override

Fuses
Behind the upper part there is a fuse for each output.

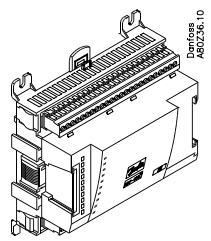

AK-XM 205A

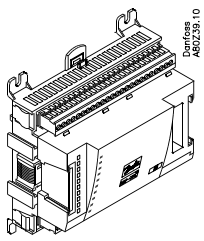

AK-XM 205B

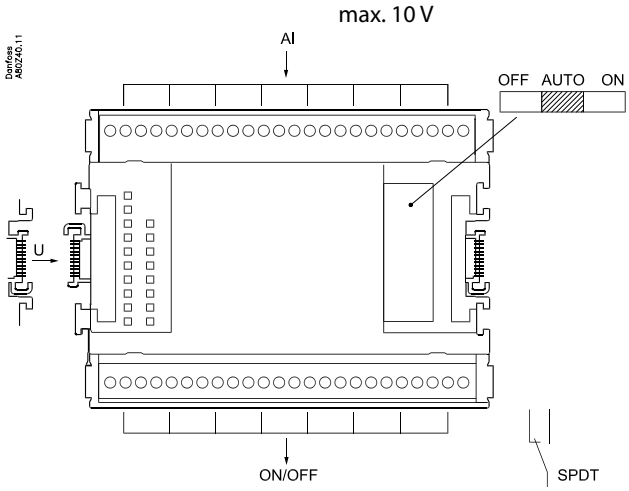

Max. 230 V
AC-1: max. 4 A (ohmic)
AC-15: max. 3 A (Inductive)

Keep the safety distance!
Low and high voltage must not be connected to the same output group

AK-XM 205B
Override of relay

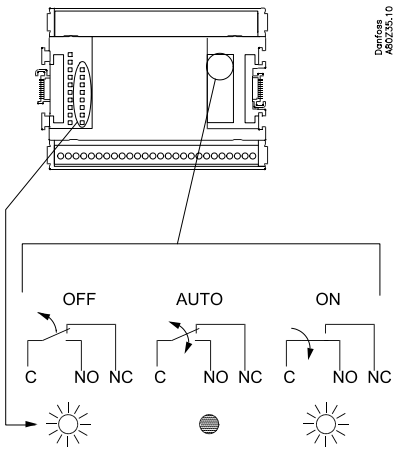

Point

Point	1	2	3	4	5	6	7	8
Type	AI1	AI2	AI3	AI4	AI5	AI6	AI7	AI8

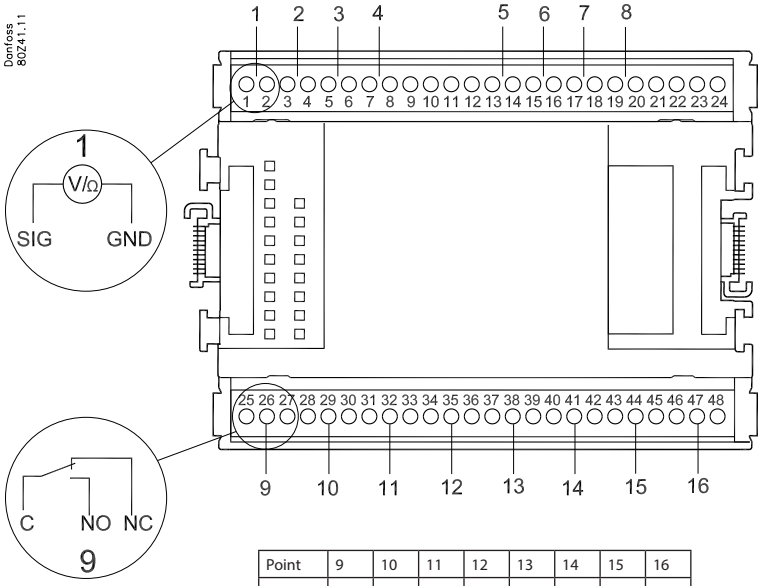

Terminal 9: 12 V
Terminal 10: 5 V

Terminal 21: 12 V
Terminal 22: 5 V

Terminal 11, 12, 23, 24 : ⏚
(Cable screen)

Point	9	10	11	12	13	14	15	16
Type	DO1	DO2	DO3	DO4	DO5	DO6	DO7	DO8

	Signal	Signal type
S Pt 1000 ohm/0°C SIG GND	S2, S3 S4, S5 Saux	Pt 1000
P AKS 32R AKS 2050 3: Brown SIG 2: Blue GND 1: Black 5V AKS 32 3: Brown SIG 2: Black GND 1: Red 12V	P0 Pc Paux	AKS 32R AKS 2050 -1 - xx bar AKS 32 -1 - zz bar
U + SIG – GND	...	0 - 5 V 0 - 10 V
On/Off SIG GND	Ext. Main switch Day/ Night Door Defrost	**Active at:** Closed / Open
DO C NO NC	Fan Alarm Light Rail heat Defrost Night blind Valve Compr.	**Active at:** on / Off

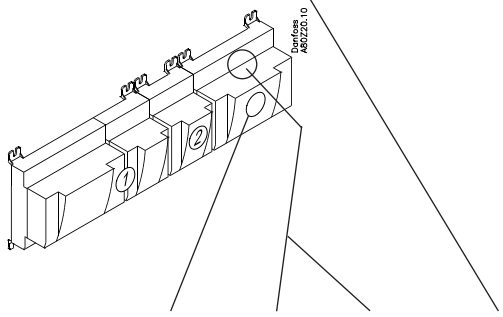

Signal	Module	Point	Terminal	Signal type / Active at
		1 (AI 1)	**1 - 2**	
		2 (AI 2)	**3 - 4**	
		3 (AI 3)	**5 - 6**	
		4 (AI 4)	**7 - 8**	
		5 (AI 5)	**13 - 14**	
		6 (AI 6)	**15 - 16**	
		7 (AI 7)	**17 - 18**	
		8 (AI 8)	**19 -20**	
		9 (DO 1)	**25 - 26 - 27**	
		10 (DO 2)	**28 - 29 - 30**	
		11 (DO 3)	**31 - 30 - 33**	
		12 (DO 4)	**34 - 35 - 36**	
		13 (DO 5)	**37 - 36 - 39**	
		14 (DO6)	**40 - 41 - 42**	
		15 (DO7)	**43 - 44 - 45**	
		16 (DO8)	**46 - 47 - 48**	

Extension module AK-XM 208C

Function
The module contains:
8 analog inputs for sensors, pressure transmitters, voltage signals and contact signals.
4 outputs for stepper motors.

Supply voltage
The supply voltage to the module comes from the previous module in the row.
The supply voltage to the valves must be from a separate supply, which must be galvanically separated from the supply for the control range.
24 V d.c. +/-20%
(Power requirements: 7.8 VA for controller + 1.3 VA per valve).

A UPS may be necessary if the valves need to open/close during a power failure.

Light-emitting diodes
There is one row with LED's. It indicate the following:
- Voltage supply to the module
- Communication active with the bottom PC board (red = error)
- Status of outputs AO1 to AO4

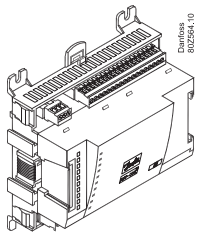

Separate voltage supply is required

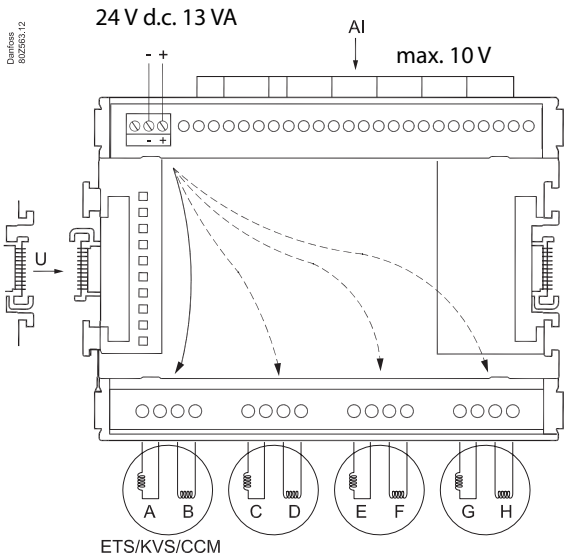

Output:
24 V d.c.
$I_{max.}$ = 500 m A / coil
20-500 step/s

Point

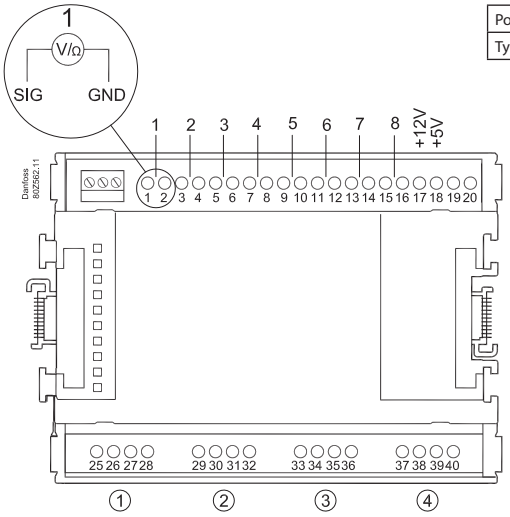

Point	1	2	3	4	5	6	7	8
Type	AI1	AI2	AI3	AI4	AI5	AI6	AI7	AI8

Terminal 17: 12 V
Terminal 18: 5 V

Terminal 19, 20:
(Cable screen)

Point	9	10	11	12
Step	1	2	3	4
Type	AO			

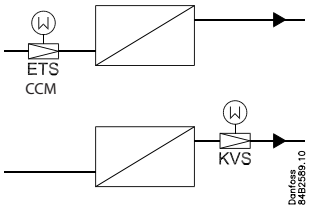

Step / Terminal	1	25	26	27	28
	2	29	30	31	32
	3	33	34	35	36
	4	37	38	39	40
ETS / **CCM / CCMT**		White	Black	Red	Green
KVS 15 / **KVS 42-54**		White	Black	Green	Red

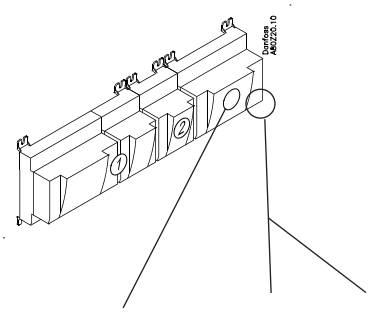

Valve		Module	Step	Terminal
A B ETS/KVS/CCM			**1 (point 9)**	**25 - 28**
			2 (point 10)	**29 - 32**
			3 (point 11)	**33 - 36**
			4 (point 12)	**37 - 40**

Extension module AK-OB 110

Function
The module contains two analog voltage outputs of 0 – 10 V.

Supply voltage
The supply voltage to the module comes from the controller module.

Placing
The module is placed on the PC board in the controller module.

Point
The two outputs have points 24 and 25. They are shown on the earlier page where the controller is also mentioned.

Galvanic isolation
The outlets AO1 and AO2 are galvanically separated from the controller module, but **not** from each other.

Max. load
I < 2.5 mA
R > 4 kohm

AO	− ○——► 0-10 V + ○——►	AO	0 - 10 V

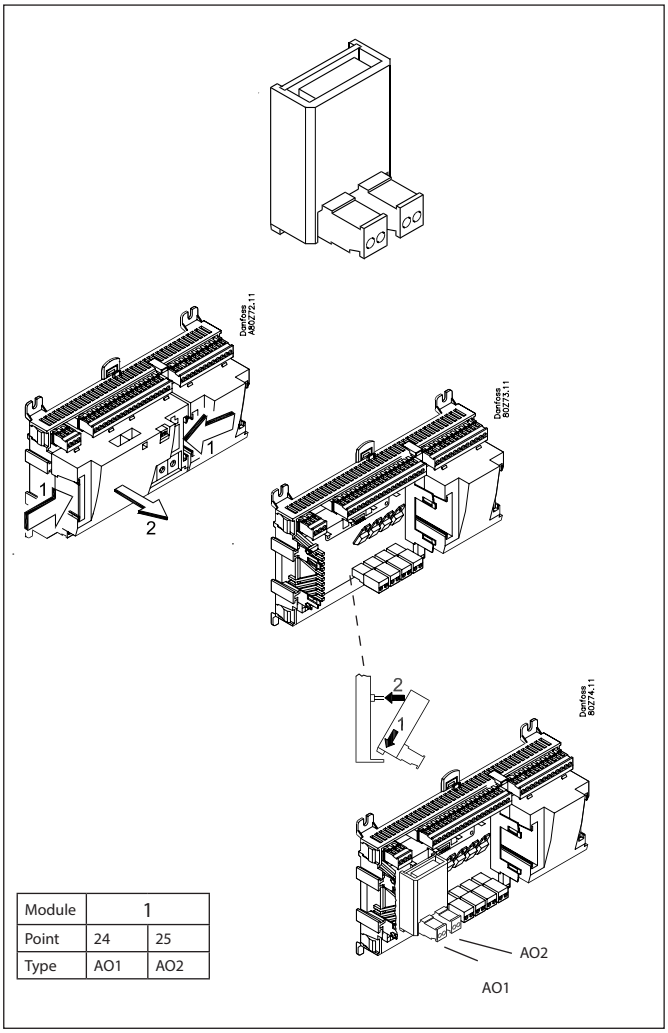

Module	1	
Point	24	25
Type	AO1	AO2

Extension module AK-OB 101A

Function
The module is a real time clock module with battery backup.

The module can be used in controllers that are not linked up in a data communication unit together with other controllers. The module is used here if the controller needs battery backup for the following functions
• Clock function
• Fixed times for day/night change-over
• Fixed defrost times
• Saving of alarm log in case of power failure
• Saving of temperature log in case of power failure

Connection
The module is provided with plug connection.

Placing
The module is placed on the PC board inside the top part.

Point
No point for a clock module to be defined – just connect it.

Working life of the battery
The working life of the battery is several years – even if there are frequent power failures.
An alarm is generated when the battery has to be replaced.
After the alarm there are still several months of operating hours left in the battery.

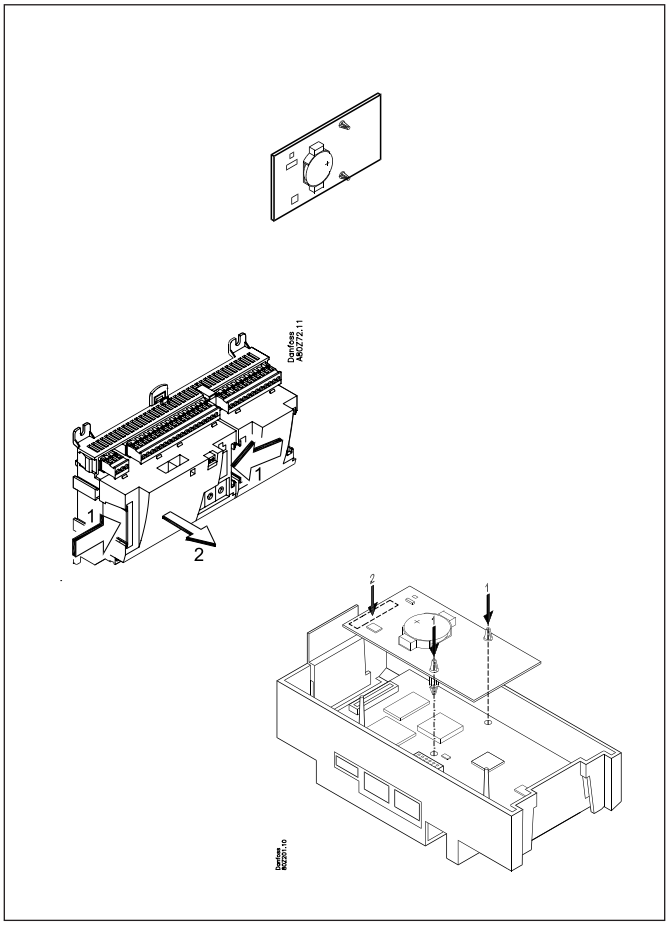

Display module EKA 163B / EKA 164B

Function
Display of important measurements from the controller, e.g. appliance temperature.
Setting of the individual functions can be performed by using the display with control buttons.
It is the controller used that determines the measurements and settings that can occur.

Connection
The extension module is connected to the controller module via a cable with plug connections. You have to use one cable per module. The cable is supplied in various lengths.

Both types of display (with or without control buttons) can be connected to either display output A, B, C and D.
When the controller starts up, the display will show the output that is connected.
- - 1 = output A
- - 2 = output B
etc.

Placing
The extension module can be placed at a distance of up to 15 m from the controller module.

Point
No point has to be defined for a display module – you simply connect it.

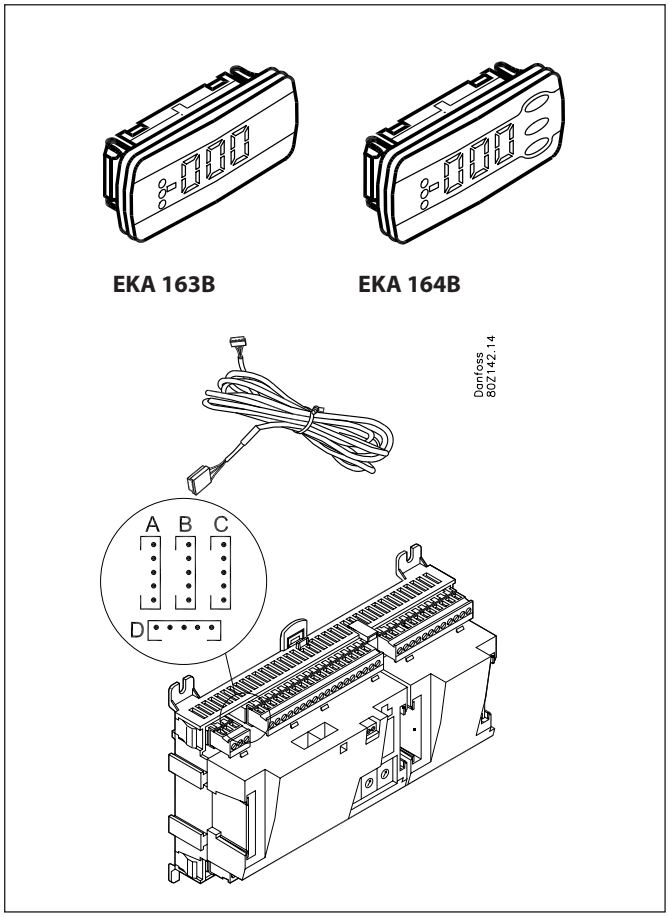

Transformer module AK-PS 075 / 150

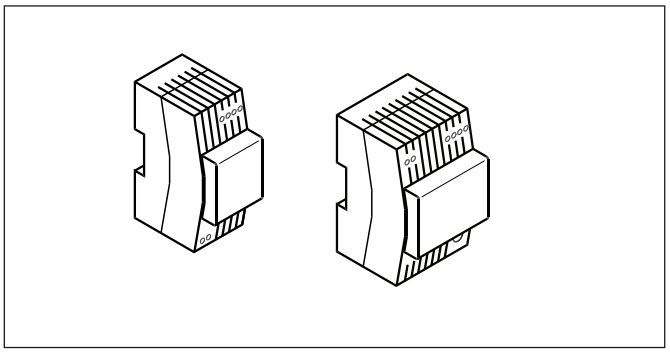

Function
24 V supply for controller.

Supply voltage
230 V a.c or 115 V a.c. (from 100 V a.c. to 240 V a.c.)

Placing
On DIN-rail

Effect

Type	Output tension	Output current	Power
AK-PS 075	24 V d.c.	0.75 A	18 VA
AK-PS 150	24 V d.c. (adjustable)	1.5 A	36 VA

Dimension

Type	High	Width
AK-PS 075	90 mm	36 mm
AK-PS 150	90 mm	54 mm

Supply to a controller

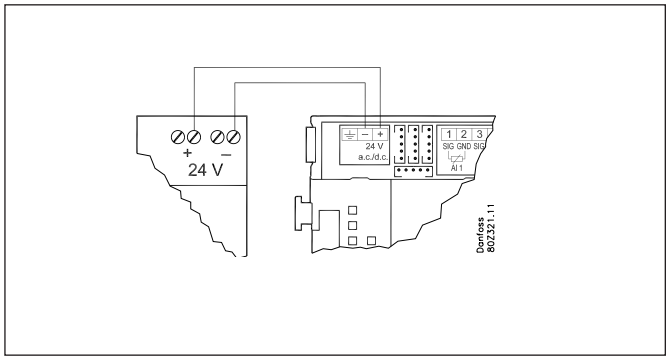

Connections

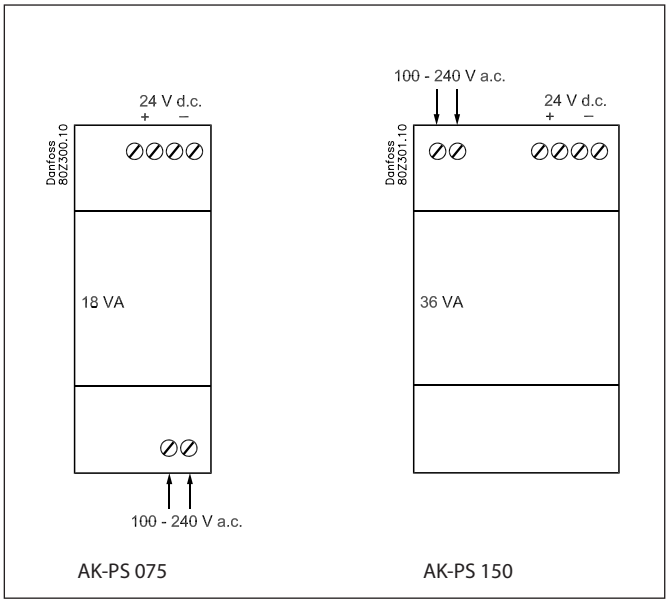

Preface to design

Be aware of the following when the number of extension modules is being planned. A signal may have to be changed, so that an additional module may be avoided.

- An ON/OFF signal can be received in two ways. Either as a contact signal on an analog input or as voltage on a low or high-voltage module.
- An ON/OFF output signal can be given in two ways. Either with a relay switch or with solid state. The primary difference is the permitted load and that the relay switch contains a cutout switch.

Mentioned below is a number of functions and connections that may have to be considered when a regulation has to be planned. There are more functions in the controller than the ones mentioned here, but those mentioned have been included in order that the need for connections can be established.

Functions

Clock function
Clock function and change-over between summer time and winter time are contained in the controller.
The clock is zeroset when there is power failure.
The clock's setting is maintained if the controller is linked up in a network with a gateway, a system manager or a clock module can be mounted in the controller.

Start/stop of regulation
Regulation can be started and stopped via the software. External start/stop can also be connected.

Alarm function
If the alarm is to be sent to a signal transmitter, a relay output will have to be used.

Extra temperature sensors and pressure sensors
If additional measurements have to be carried out beyond the regulation, sensors can be connected to the analog inputs.

Forced control
The software contains a forced control option. If an extension module with relay outputs is used, the module's top part can be with change-over switches – switches that can override the individual relays into either OFF or ON position.

Data communication
The controller module has terminals for LON data communication. The requirements to the installation are described in a separate document. Literature number RC8AC.

Connections

In principle there are the following types of connections:

Analog inputs "AI"
This signal must be connected to two terminals.
Signals can be received from the following sources:
- Temperature signal from Pt 1000 ohm temperature sensor
- Pulse signal or reset signal
- Contact signal where the input is short-circuited or "opened", respectively
- Voltage signal from 0 to 10 V
- Signal from pressure transmitter AKS 32, AKS 32R or AKS 2050.
  The supply voltage is supplied from the module's terminal board where there is both a 5 V supply and a 12 V supply.
  When programming the pressure transmitter's pressure range must be set.

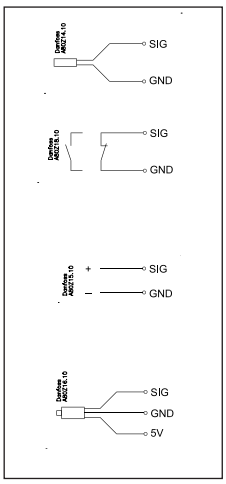

ON/OFF voltage inputs "DI"
This signal must be connected to two terminals.
- The signal must have two levels, either 0 V or "voltage" on the input.
  There are two different extension modules for this signal type:
  - low-voltage signals, e.g. 24 V
  - high-voltage signals, e.g. 230 V

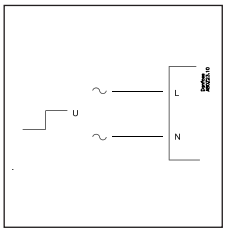

When programming the function must be set:
- Active when the input is without voltage
- Active when voltage is applied to the input.

ON/OFF output signals "DO"
There are two types, as follows:
- Relay outputs
  All relay outputs are with change-over relay so that the required function can be obtained when the controller is without voltage.
- Solid state outputs
  Primarily for AKV valves which connect quickly. But output can cut an external relay in and out, as with a relay output.
  The output is only found on the controller module.

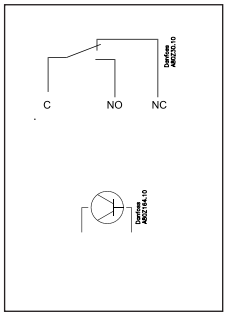

When programming the function must be set:
- Active when the output is activated
- Active when the output is not activated.

Analog output signal "AO"
This signal is to be used if a control signal is to be transmitted to an external valve or to fans with EC motors.
When programming the signal range must be defined: 0-5 V, 1-5 V, 0-10 V or 2-10 V.

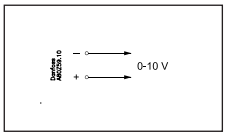

Pulse signal for the stepper motors.
This signal is used by valve motors of the type ETS and CCM.
The valve type should be set during programming.

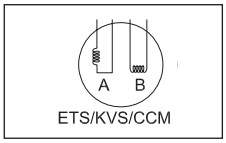

Limitations

As the system is very flexible regarding the number of connected units you must check whether your selection complies with the few limitations there are.
The complexity of the controller is determined by the software, the size of the processor, and the size of the memory. It provides the controller with a certain number of connections from which data can be downloaded, and others where coupling with relays can be performed.

The controller **is not** made for use on plate heat exchanger.

✔ The sum of connections cannot exceed **80.**

✔ The number of extension modules must be limited so that the total power will not exceed **32** VA (including controller).

✔ No more than **5** pressure transmitters may be connected to one controller module.

✔ No more than **5** pressure transmitters may be connected to one extension module.

Common pressure transmitter
If several controllers receive a signal from the same pressure transmitter, the supply to the affected controllers must be wired so that it is not possible to switch off one of the controllers without also switching off the others. (If one controller is switched off, the signal will be pulled down, and all the other controllers will receive a signal which is too low)

Design of a evaporator control

Procedure:

1. Make a sketch of the system in question
2. Check that the controller's functions cover the required application
3. Consider the connections to be made
4. Use the planning table. / Note down the number of connections ./ add up
5. Are there enough connections on the controller module? – If not, can they be obtained by changing an ON/OFF input signal from voltage signal to contact signal, or will an extension module be required?
6. Decide which extension modules are to be used
7. Check that the limitations are observed
8. Calculate the total length of modules
9. The modules are linked together
10. The connection sites are established
11. Draw a connection diagram or a key diagram
12. Size of supply voltage/transformer

Follow these 12 steps

1 Sketch

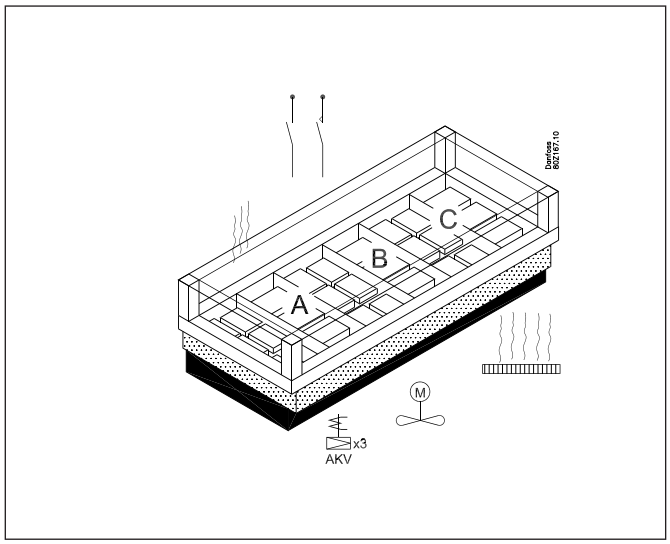

Make a sketch of the system in question.

2 Evaporator and refrigerator appliance functions

	AK-CC 750
Application	
Control of cold room or freezing room	x
Control of refrigeration or freezing appliances	x
Regulation of evaporators	1 - 4
Thermostat function	
Common thermostat function for all sections	x
Thermostat function for each section	x
On/off thermostat with AKV / ETS or solenoid valve	x
Modulating thermostat with AKV / ETS valve	x
Change between two thermostat references (thermostat band)	x
Day/night switch	x
Displacement of reference via analog input signal	x
Thermostat sensor before or after evaporator	x
Thermostat sensor both before and after the evaporator (weighted thermostat)	x
Alarm thermostat (weighted)	x
Common functions	
Fan control (pulsation or EC motor)	x
Rail heat control (pulsation)	x
Compressor control. Relay active when refrigeration is demanded	x
Appliance cleaning function	x
Appliance shut down	x
Door contact function	x
Light function	x
Night blind	X
Forced closing	x
Alarm output	x
Start / stop of regulation	x

Receive external on/off alarm signal	10
Receive external analog alarm signal	5
Product sensor with alarm function	4
Liquid injection	
Control of AKV / ETS valves	4
Control of solenoid valves	4
Superheat regulation wit P0 and S2 measurement	x
MOP control	x
Refrigerant choice	x
Defrost function	
Electrical defrost	4
Warm Brine defrost, Hot gas defrost	x
Smelt function	x
Drip tray heat	X
Adaptive defrost	x
Defrost stop on temperature or time	x
Coordinated defrost via network	x
Miscellaneous	
Alarm priorities	x
Sensor correction	x
Option for connection of separate display	4
Separate thermostats	5
Separate pressostats	5
System signals via data communication	
Signal for P0-optimasation	x
Night setback	x
Inject ON-signal (forced closing)	x
Light control	x
Coordinated defrost	x
Forced cooling	x

A bit more about the functions

Common thermostat
The thermostat temperature can be either a weighting of the S3 and S4 sensors in section A.
Alternatively, the thermostat temperature can be a minimum value, a maximum value or an average value of all S3 or S4 sensors for the refrigeration sections used.

Modulating thermostat
AKV / ETS:
The function can only be used on central plant.
The opening degree of the valve is adjusted so that an accurate, constant temperature is maintained. .
Solenoid valve:
This function can be used on both central systems and on indirect refrigeration appliances. The valve's duty cycle is adapted so that optimum temperature regulation is achieved on the basis of a specific time period. The valve's duty cycle is desynchronised so that an even load is achieved across the entire system

Changeover between two thermostat references
The function is used for appliances where contents are frequently changed and where a different thermostat reference is required. Changeover between the two references can take place by means of a switch function.

Day/night signal for raising the reference
The built-in week diagram can be used for raising the thermostat reference, but it is also possible to use an external ON/OFF signal or a signal via the network.

Product sensors
Each appliance section has a separate product sensor which can be used for monitoring/registering the temperature.

Appliance cleaning function
A switch function with pulse pressure will activate the function whereupon refrigeration will be stopped. The fans continue operating.
"Later": Next push on the switch will stop the fans.
"Still later": Next push on the switch will restart refrigeration.
When a display is mounted at the appliance the various situations may be followed by the readout:
Normal operation: Appliance temperature
1st push: Fan
2nd push: OFF
3rd push: Appliance temperature

Appliance shut down
Signal about shutdown can be received via data communication or from a contact on a On/Off input.

Door switch function
In freezing and cold rooms the door switch is used for switching the light on and off, for starting and stopping the refrigeration, and for sounding the alarm if the door has been open for a long time

Light function
The light function can be activated by the door switch, the internal time diagram or a signal via the network.

Defrost sensor S5
On long evaporators it may be necessary to mount two sensors in order to ensure the correct defrost of the evaporator. The sensors are for example named S5A-1 and S5A-2.

"Inject ON" override function
The function closes expansion valves on the evaporator control when all compressors are stopped.
The function can take place via the data communication, or it may be wired via a relay output.

Adaptive defrost
The function requires signals from S3 and S4 as well as from condensing pressure Pc. The expansion valve must furthermore be type AKV.
The function cannot be used in combination with pulsation of fans.

If you want to know more about the functions, go to chapter 5.

3

Connections

Here is a survey of the possible connections. The texts can be read in context with the planning table in point 4.

Analog inputs
Temperature sensors each section
- S3 air sensor at evaporator inlet
- S4 air sensor at evaporator outlet (one of the S3/S4 sensors may be omitted)
- .• S5 defrost sensor. Two may be used for long sections
- Product sensor. Extra sensor that only checks the product temperature
- S2 gas sensor at evaporator outlet (control of AKV valve).
- Saux 1-4, extra sensors, which can be used for general thermostats or monitoring.

Pressure transmitters
- P0 For registration of the evaporating pressure (control of AKV valve).
- Pc For registration of the condensing pressure. Can be used in connection with adaptive defrost, or the signal can be received via data communication.
- Paux 1-3, extra transmitters, which can be used for general pressostats or monitoring.

A pressure transmitter type AKS 32R can supply signals to five controllers

Voltage signal
Ext. Ref. is used if the thermostat reference is to be displaced with a signal from another control.
- General 0-10 V inputs. Up to 5 inputs, which can be used for monitoring and alarm function.

On/Off-inputs
Contact function (on an analog input) or *voltage signal* (on an extension module)
- External start/stop of regulation
- Pulse pressure (on a analogue input) used for the "appliance cleaning" function
- Switch for changeover between two temperature referenc
- Inject ON. Signal from a compressor control
- Pulse pressure (on a analogue input) for start of defrost
- Pulse pressure (on a analogue input) for opening/closing Night blind
- Door switch in coldroom
- External day/night signal (raises the temperature reference when Night blind is used)
- Up to 10 general DI inputs for signals from other automatic controls serving to activate the controller's alarm function

On/off-output
Relay outputs
- Defrost (one each section)
- Rail heat
- Fan motor
- Light
- Compressor (demand on cooling)
- Alarm relay
- Solenoid valve (EVR)
- Drain valve, Suction line valve
- Night blind
- Drip tray heat recovery
- General functions

AKV Solid state outputs
The solid state outputs on the controller module are primarily used for AKV valves, but may also be used for the functions mentioned under "relay outputs".
(The output will always be "OFF" when the controller is hit by power failure).

Analog output
- 0-10 V signal for valve regulation or fan with EC motor
- Stepper signal to ETS valve

Example
- Freezing appliance with three sections
- AKV is used for injections (S2 and P0)
- Electric defrost with stop based on temperature (S5)
- Two thermostat sensors per section (S3 and S4)
- Control of fans and rail heat
- External start/stop (Main switch)
- Switch signal for appliance cleaning
- 3 display for monitoring of appliance temperature

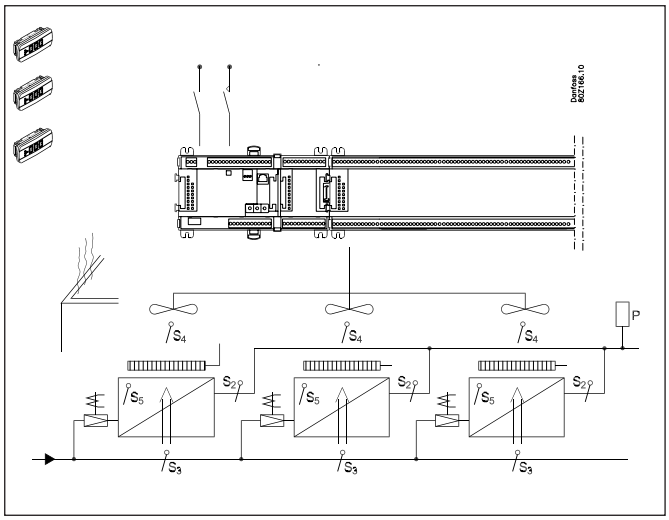

Data from this example is used in the planning table on the next page.
The result is that the following modules should be used:
- AK-CC 750 controller
- AK-XM 101A
- 3 pcs. EKA 163B

If the result had demonstrated that an additional output was needed, AK-XM 205A or B would have been the required extension.

4

Planning table

The table helps you establish whether there are enough inputs and outputs on the basic controller.
If there are not enough of them, the controllers must be extended by one or more of the mentioned extension modules.

Note down the connections you will require and add them up

	Analog input signal	Example	On/off voltage signal	Example	On/off voltage signal	Example	On/Off output signal	Example	Analog output 0-10 V	Stepper output	Example	7 Limitations
Analog inputs												
Temperature sensors, S2, S3, S4, S5		12										
Extra temperature sensor / Separate thermostats		0										
Pressure transmitter , P0, Pc, Separate pressostats		1										P = Max. **5** / module
Voltage signal from an other regualtion, separate signals												
Displacement of reference with analog signal												
On/off inputs	Kontakt		24 V		230 V							
External start/stop (Main switch)		1										
Case cleaning (pulse pressure). Shutdown		1										
Switch between two temperature references												
Inject ON												
Start of defrost (pulse pressure)												
Door contact												
Night setback												
General DI alarm inputs (1-10)												
Open/ close Night blind (pulse pressure)												
On/off outputs												
AKV valves								3				
Solenoid valves (when TEV valves is used))												
Fans								1				
Defrost (electric or hot gas valves)								3				
Drain valve, suction line valve												
Rail heat								1				
Light												
Night blind												
Drip tray heat												
Compressor												
Alarm												
General: Thermostat1-5, Pressostat 1-5, Voltage.1-5												
Analog control signal, 0-10 V												
External valve regulation / EC motor												
Valves with stepmotor												
Sum of connections for the regulation		15						8				Sum = max. **80**
Number of connections on a controller module	11	11	0	0	0	0	8	8	0	0	0	
5 **Missing connections, if applicable**		4						-				
6 **The missing connections to be updated from one or more extension modules:**												Sum of power
AK-XM 101A **(8 analog inputs)**		1										___ pcs. á 2 VA = __
AK-XM 102A **(8 digital low voltage inputs)**												___ pcs. á 2 VA = __
AK-XM 102B **(8 digital high voltage inputs)**												___ pcs. á 2 VA = __
AK-XM 103A **(4 analog inputs, 4 analog outputs)**												___ pcs. á 2 VA = __
AK-XM 204A / B **(8 relay outputs)**												___ pcs. á 2 VA = __
AK-XM 205A / B **(8 analog inputs + 8 relay outputs)**												___ pcs. á 5 VA = __
AK-XM 208C **(8 analog inputs + 4 stepper outputs)**												___ pcs. á 5 VA = __
AK-OB 110 **(2 analog outputs)**												___ pcs. á 0 VA = 0
												1 pcs. á 8 VA = 8
												Sum =
												Sum = max. **32** VA

The example:
None of the 3 limitations are exceeded => OK

8 Length

If you use many extension modules the controller's length will grow accordingly. The row of modules is a complete unit which cannot be broken.

The module dimension is 72 mm.
Modules in the 100-series consist of one module
Modules in the 200-series consist of two modules
The controller consist of three modules
The length of an aggregate unit = n x 72 + 8

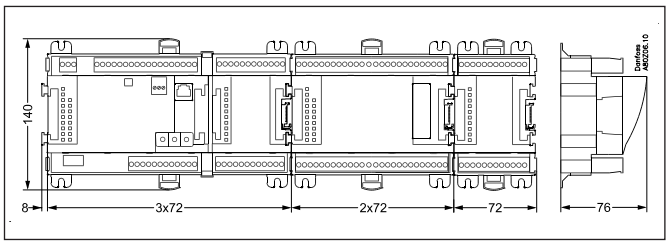

or in an other way:

Module	Type	Number		at		Length
Controller module		1	x	224	=	224 mm
Extension module	200-series	_	x	144	=	___ mm
Extension module	100-series	_	x	72	=	___ mm
Total length					=	___ mm

Example continued:
Controller module + 1 extension module in 100-series = 224 + 72 = 296 mm.

9 Linking of modules

Start with the controller module and then mount the selected extension modules. The sequence is of no importance.

However, you must **not** change the sequence, i.e. rearrange the modules, after you have made the setup where the controller is told which connections are found on which modules and on which terminals.

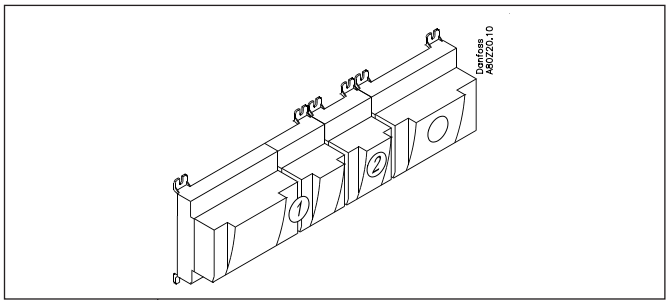

The modules are attached to one another and kept together by a connection which at the same time transmits the supply voltage and the internal data communication to the next module.

Mounting and removal must always be performed when there is no voltage.

The protective cap mounted on the controller's plug connection must be moved to the last vacant plug connection so that the plug will be protected against short-circuit and dirt.

When the regulation has started the controller will all the time check whether there is connection to the connected modules. This status can be followed by the light-emitting diode.

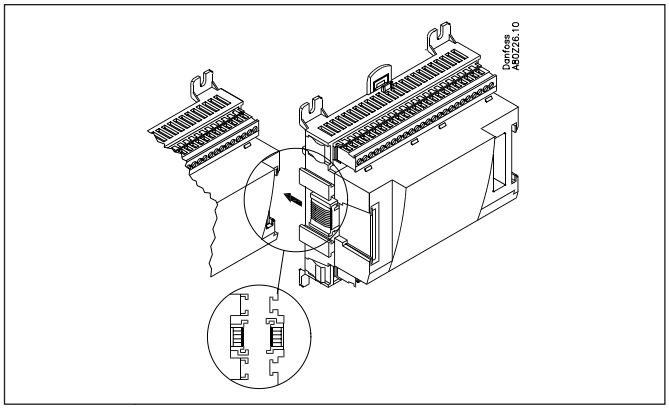

When the two catches for the DIN rail mounting are in open position the module can be pushed into place on the DIN rail – no matter where in the row the module is found.
Removal is likewise carried out with the two catches in the open position.

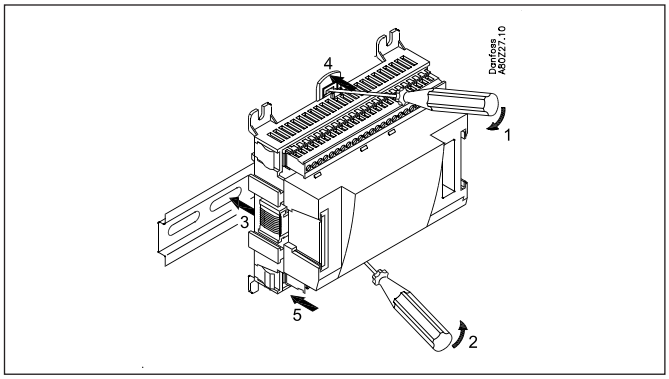

10 Determine the connection points

All connections must be programmed with module and point, so in principle it does not matter where the connections are made, as long as it takes place on a correct type of input or output.

- The controller is the first module, the next one is 2, etc.
- A point is the two or three terminals belonging to an input or output (e.g. two terminals for a sensor and three terminals for a relay).

The preparation of the connection diagram and the subsequent programming (configuration) should take place at the present time. It is most easily accomplished by filling in the connection survey for the relevant modules.

Principle:

Name	On module	On Point	Function
fx Compressor 1	*x*	*x*	*ON*
fx Compressor 2	*x*	*x*	*ON*
fx Alarm relay	*x*	*x*	*OFF*
fx Main switch	*x*	*x*	*Close*
fx P0	*x*	*x*	*AKS 32R 1-6 bar*

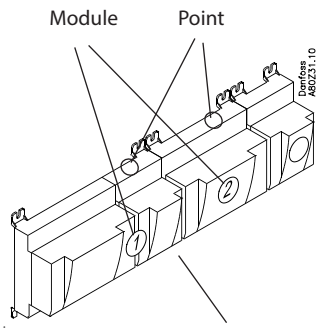

Mind the numbering.
The right-hand part of the controller module may look like a separate module. But it **isn't.**

The connection survey from the controller and any extension modules are uploaded from the paragraph "Module survey. E.g. controller module:

Signal	Module	Point	Terminal	Signal type / Active at
		1 (AI 1)	**1 - 2**	
		2 (AI 2)	**3 - 4**	
		3 (AI 3)	**5 - 6**	
		4 (AI 4)	**7 - 8**	

- Columns 1, 2, 3 and 5 are used for the programming.
- Columns 2 and 4 are used for the connection diagram.

Tip
The Appendix shows 80 general installation types.
If your plant closely resembles one of those shown, you can use the connection points indicated for it.

Example continued:

Signal	Module	Point	Terminal	Signal type / Active at
Air temperature - S3A	1	**1** (AI 1)	**1 - 2**	Pt 1000
Air temperature- S3B		**2** (AI 2)	**3 - 4**	Pt 1000
Air temperature- S3C		**3** (AI 3)	**5 - 6**	Pt 1000
Air temperature - S4A		**4** (AI 4)	**7 - 8**	Pt 1000
Air temperature - S4B		**5** (AI 5)	**9 - 10**	Pt 1000
Air temperature - S4C		**6** (AI 6)	**11 - 12**	Pt 1000
Defrost sensor - S5A		**7** (AI 7)	**13 - 14**	Pt 1000
Defrost sensor - S5B		**8** (AI 8)	**19 - 20**	Pt 1000
Defrost sensor - S5C		**9** (AI 9)	**21 - 22**	Pt 1000
Gas temperature - S2A		**10** (AI 10)	**23 - 24**	Pt 1000
Evaporator pressure - P0		**11** (AI 11)	**25 - 26**	AKS32R-12
AKV A		**12** (DO 1)	**31 - 32**	-
AKV B		**13** (DO 2)	**33 - 34**	-
AKV C		**14** (DO 3)	**35 - 36**	-
Fans		**15** (DO 4)	**37 - 38**	ON
Defrost A		**16** (DO 5)	**39-40-41**	ON
Defrost B		**17** (DO6)	**42-43-44**	ON
Defrost C		**18** (DO7)	**45-46-47**	ON
Rail heat		**19** (DO8)	**48-49-50**	ON
		24	**-**	
		25	**-**	

Signal	Module	Point	Terminal	Signal type / Active at
Gas temperature - S2B	2	**1** (AI 1)	**1 - 2**	Pt 1000
Gas temperature - S2C		**2** (AI 2)	**3 - 4**	Pt 1000
External Start/stop		**3** (AI 3)	**5 - 6**	Closed
Case cleaning (pulse pressure)		**4** (AI 4)	**7 - 8**	Closed
		5 (AI 5)	**17 - 18**	
		6 (AI 6)	**19 - 20**	
		7 (AI 7)	**21 - 22**	
		8 (AI 8)	**23 - 24**	

11 Connection diagram

Drawings of the individual modules may be ordered from Danfoss.
Format = dwg and dxf.

You may then yourself write the module number in the circle and draw the individual connections.

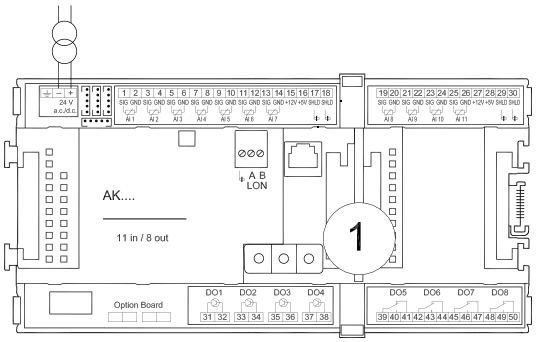

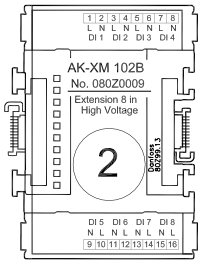

Example continued:

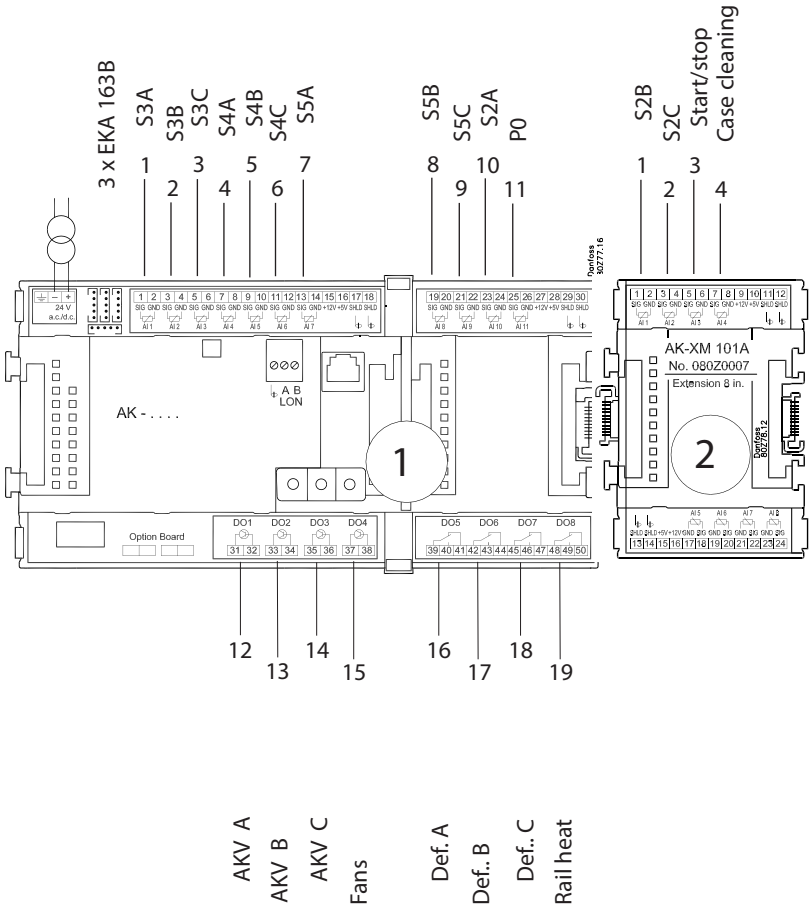

12 Supply voltage

Supply voltage is only connected to the controller module. The supply to the other modules is transmitted via the plug between the modules. The supply must be 24 V +/-20%. One transformer must be used for each controller. The transformer must be a class II. The 24 V must not be shared by other controllers or units. The analog inputs and outputs are not galvanically separated from the supply.

The + and – 24V input must **not** be earthed.

If using stepper motor valves, the supply for these must be provided from a separate power supply. See AK-XM 208C.

It will also be necessary to safeguard the voltage to the controller and valves using UPS.

Transformer size

The power consumption grows with the number of modules used:

Module	**Type**	**Number**	**á**	**Effect**
Controller		1 x	8 =	8 VA
Extension module	200-series	_ x	5 =	__ VA
Extension module	100-series	_ x	2 =	__ VA
Total				___ VA

Common pressure transmitter

If several controllers receive a signal from the same pressure transmitter, the supply to the affected controllers must be wired so that it is not possible to switch off one of the controllers without also switching off the others. (If one controller is switched off, the signal will be pulled down, and all the other controllers will receive a signal which is too low)

Example continued:

Controller module	8 VA
+ 1 extension module in 100-series	2 VA

Transformer size (least)	10 VA

Ordering

1. Controller

Type	Function	Application	Language	Code no.	Example continued
AK-CC 750	Controller for evaporator control	1, 2, 3 or 4 sections	English, German, French, Dutch, Italian, Spanish, Portuguese, Danish, Finnish, Polish, Russian, Czech	**080Z0125**	x

2. Extension modules and survey for inputs and outputs

Type	Analog inputs	On/Off outputs		On/off supply voltage (DI signal)		Analog outputs	Stepper outputs	Module with switches	Code no.	Example continued
	For sensors, pressure transmitters etc.	Relay (SPDT)	Solid state	Low voltage (max. 80 V)	High voltage (max. 260 V)	0-10 V d.c.	For valves with step control	For override of relay outputs	With screw terminals	
Controller	11	4	4	-	-	-		-	-	
Extension modules										
AK-XM 101A	8								**080Z0007**	x
AK-XM 102A				8					**080Z0008**	
AK-XM 102B					8				**080Z0013**	
AK-XM 103A	4					4			**080Z0032**	
AK-XM 204A		8							**080Z0011**	
AK-XM 204B		8						x	**080Z0018**	
AK-XM 205A	8	8							**080Z0010**	
AK-XM 205B	8	8						x	**080Z0017**	
AK-XM 208C	8						4		**080Z0023**	
The following extension module can be placed on the PC board in the controller module. There is only room for one module.										
AK-OB 110						2			**080Z0251**	

3. AK operation and accessories

Type	Function	Application	Code no.	Example continued
Operation				
AK-ST 500	Software for operation of AK controllers	AK-operation	**080Z0161**	x
-	Cable between PC and AK controller	AK - Com port	**080Z0262**	x
-	Cable between zero modem cable and AK controller / Cable between PDA cable and AK controller	AK - RS 232	**080Z0261**	
-	Cable between PC and AK controller	AK - USB	**080Z0264**	
Accessories	**Transformer module 230 V / 115 V to 24 V**			
AK-PS 075	18 VA	Supply for controller	**080Z0053**	x
AK-PS 150	36 VA		**080Z0054**	
Accessories	**External display that can be connected to the controller module. For showing, say, the appliance temperature**			
EKA 163B	Display		**084B8574**	xxx
EKA 164B	Display with operation buttons		**084B8575**	
-	Cable between display and controller	Length = 2 m	**084B7298**	xxx
		Length = 6 m	**084B7299**	
Accessories	**Real time clock for use in controllers that require a clock function, but are not wired with data communication.**			
AK-OB 101A	Real time clock with battery backup.	To be mounted in an AK controller	**080Z0252**	

3. Mounting and wiring

This section describes how the controller:
• Is fitted
• Is connected

We have decided to work on the basis of the example we went through previously, i.e. the following modules:
• AK-CC 750 controller module
• AK-XM 101A analog output module
• 3 pcs. EKA 163B display

Mounting

Mounting of extension module on the basic module

1. Move the protective cap

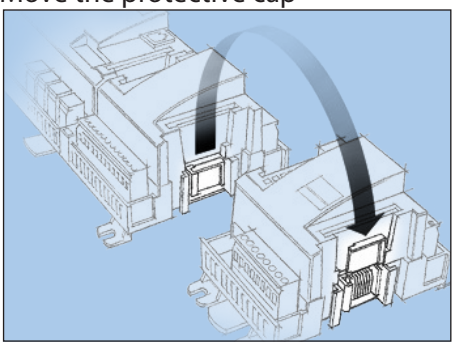

Remove the protective cap from the connection plug on the right-hand side of the basic module.
Place the cap on the connection plug to the right of the extension module that is to be mounted on the extreme right-hand side of the AK assembly.

2. Assemble the extension module and the basic module

The basic module must not be connected to voltage.

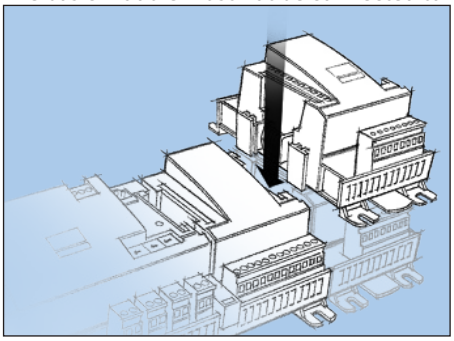

In our example one extension module is to be fitted to the basic module. The sequence is thus:

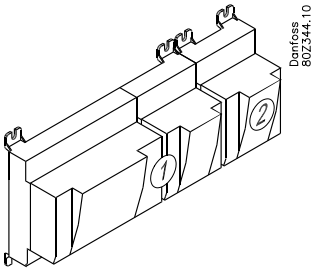

All the subsequent settings that affect the two extension modules are determined by this sequence.

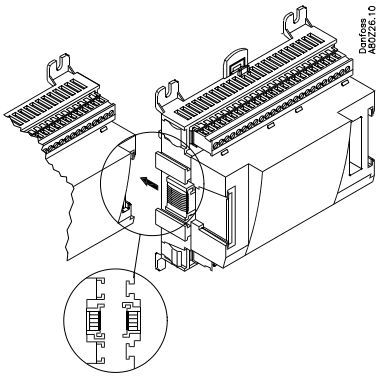

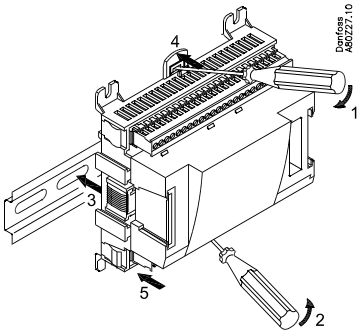

When the two snap catches for the DIN rail mounting are in the open position, the module can be pushed into place on the DIN rail – regardless of where the module is on the row.
Disassembly is thus done with the two snap catches in the open position.

Wiring

Decide during planning which function is to be connected and where this will be.

1. Connect inputs and outputs

Here are the tables for the example:

Signal	Module	Point	Terminal	Signal type / Active at
Air temperature - S3A	1	**1** (AI 1)	**1 - 2**	Pt 1000
Air temperature- S3B		**2** (AI 2)	**3 - 4**	Pt 1000
Air temperature- S3C		**3** (AI 3)	**5 - 6**	Pt 1000
Air temperature - S4A		**4** (AI 4)	**7 - 8**	Pt 1000
Air temperature - S4B		**5** (AI 5)	**9 - 10**	Pt 1000
Air temperature - S4C		**6** (AI 6)	**11 - 12**	Pt 1000
Defrost sensor - S5A		**7** (AI 7)	**13 - 14**	Pt 1000
Defrost sensor - S5B		**8** (AI 8)	**19 - 20**	Pt 1000
Defrost sensor - S5C		**9** (AI 9)	**21 - 22**	Pt 1000
Gas temperature - S2A		**10** (AI 10)	**23 - 24**	Pt 1000
Evaporator pressure - P0		**11** (AI 11)	**25 - 26**	AKS32R-12
AKV A		**12** (DO 1)	**31 - 32**	-
AKV B		**13** (DO 2)	**33 - 34**	-
AKV C		**14** (DO 3)	**35 - 36**	-
Fans		**15** (DO 4)	**37 - 38**	ON
Defrost A		**16** (DO 5)	**39-40-41**	ON
Defrost B		**17** (DO6)	**42-43-44**	ON
Defrost C		**18** (DO7)	**45-46-47**	ON
Rail heat		**19** (DO8)	**48-49-50**	ON
		24	**-**	
		25	**-**	

Signal	Module	Point	Terminal	Signal type / Active at
Gas temperature - S2B	2	**1** (AI 1)	**1 - 2**	Pt 1000
Gas temperature - S2C		**2** (AI 2)	**3 - 4**	Pt 1000
External Start/stop		**3** (AI 3)	**5 - 6**	Closed
Case cleaning (pulse pressure)		**4** (AI 4)	**7 - 8**	Closed
		5 (AI 5)	**17 - 18**	
		6 (AI 6)	**19 - 20**	
		7 (AI 7)	**21 - 22**	
		8 (AI 8)	**23 - 24**	

The function of the switch functions can be seen in the last column.

The connections for the example can be seen here.

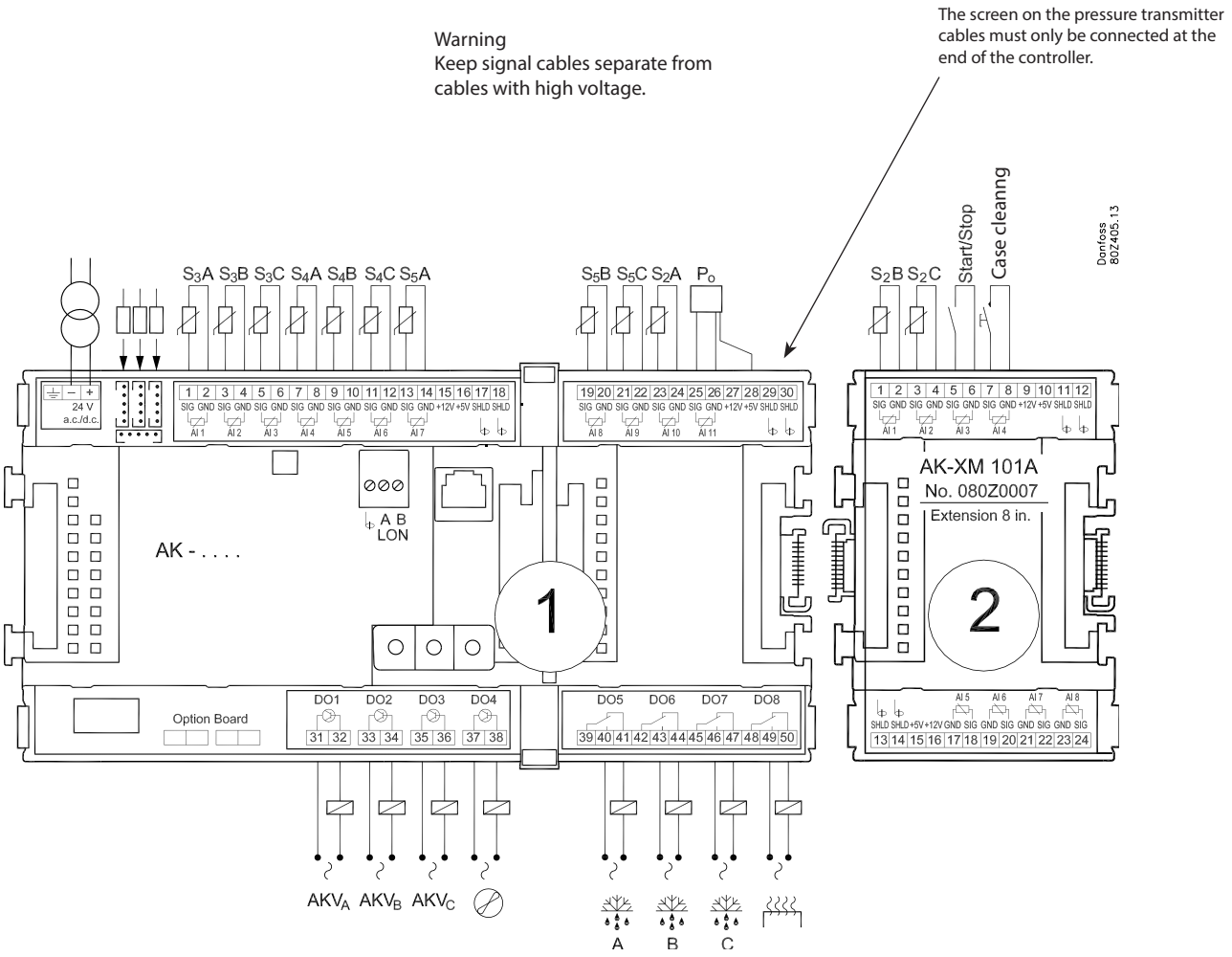

2. Connect LON communication network

The installation of the data communication must comply with the requirements set out in document RC8AC.

3. Connect supply voltage

Is 24 V, and the supply must not be used by other controllers or devices. The terminals must not be earthed.

4. Follow light-emitting diodes

When the supply voltage is connected the controller will go through an internal check. The controller will be ready in just under one minute when the light-emitting diode "Status" starts flashing slowly.

5. When there is a network

Set the address and activate the Service Pin.
When the controller is set correct on the network the LED "status" will flash quickly for 10 minutes.

6. The controller is now ready to be configured.

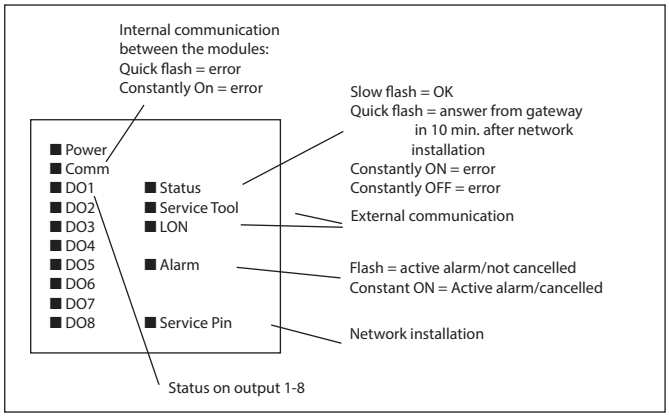

4. Configuration and operation

This section describes how the controller:
• Is configured
• Is operated

We have decided to work on the basis of the example we went through previously, i.e. a frost appliance with 3 evaporators. The example is shown overleaf.

Refrigerating plant example

We have decided to describe the setup by means of an example comprising a freezing appliance with 3 evaporators.
The example is the same as the one given in the "Design" section, i.e. the controller is an AK-CC 750 + extension modules.

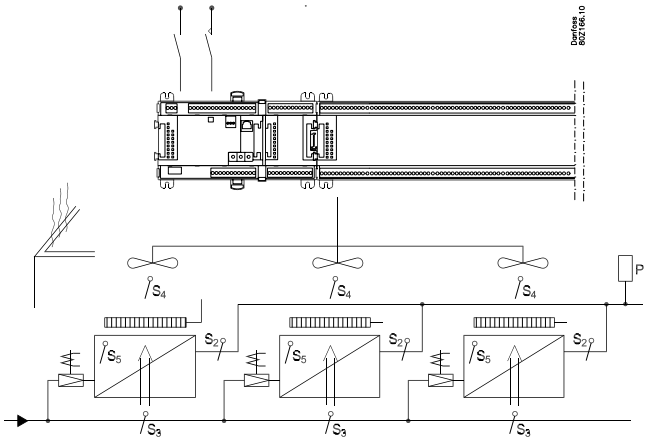

Freezing appliance
- Refrigerant R134a
- 3 evaporators
- Electric defrost on each section
- Fans
- Rail heat
- 3 displays for monitoring of temperature in the sections

Refrigeration:
- 3 AKV valves
- Superheat measured with P0 and 3 S2-sensors
- S3 is alarm sensor
- S4 is thermostat sensor
- Night setback on 3K

Defrost:
- The defrost is stopped individually based on temperature (S5)
- Refrigeration starts when both defrosts have been accomplished

Fans:
- Operates during defrost

Cleaning:
- Pulse pressure for start and later stop of cleaning

Other:
- External start/stop used (Main switch)

There is also an internal main switch as a setting. Both must be "ON" before any adjustment is made.

The modules used are selected in the design phase.

For the example shown we use the following modules:
- AK-CC 750 controller
- AK-XM 101A analog output module

Configuration

Connect PC

PC with the program "Service Tool" is connected to the controller.

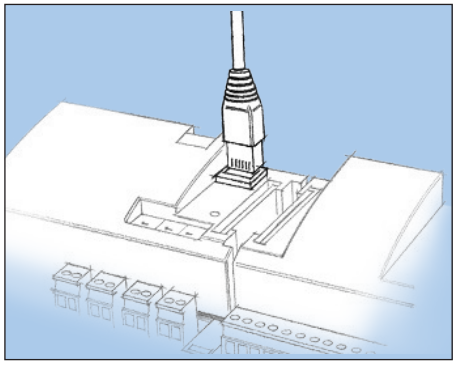

The controller must be switched on first and the LED "Status" must flash before the Service Tool programme is started.

Start Service Tool programme

Login with user name SUPV

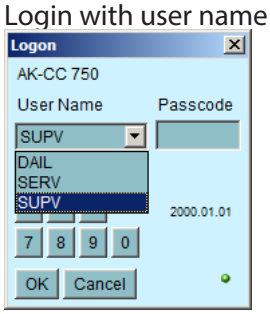

Select the name **SUPV** and key in the access code.

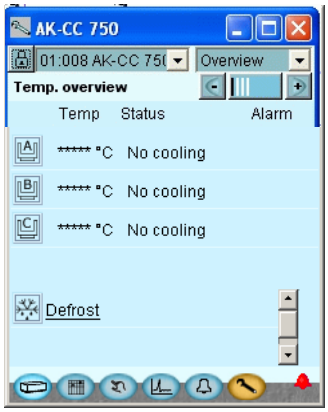

For connecting and operating the "AK service tool" software, please see the manual for the software.

The first time the Service Tool is connected to a new version of a controller the start-up of the Service Tool will take longer than usual while information is retrieved from the controller.
Time can be followed on the bar at the bottom of the display.

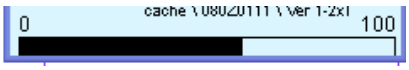

When the controller is supplied the SUPV access code is 123.
When you are logged into the controller an overview of it will always appear.

(In case the overview is empty. This is because the controller has not yet been set up.)
The red alarm bell at the bottom right tells you that there is an active alarm in the controller. In our case the alarm is due to the fact that the time in the controller has not yet been set.

Authorization

When the controller is supplied it has been set with standard authorization for different user interfaces. This setting should be changed and adapted to the plant. The changes can be made now or later.

1. Go to Configuration menu

Press the orange setup button with the spanner at the bottom of the display.

You will use this button again and again whenever you want to get to this display.
On the left-hand side are all the functions not shown yet. There will be more here the further into the setup we go.

2. Select Authorization

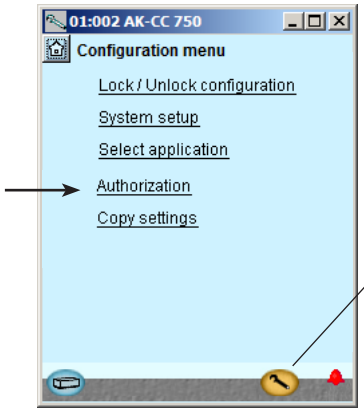

Press the line **Authorization** to get to the user setup display.

3. Change setting for the user 'SUPV'

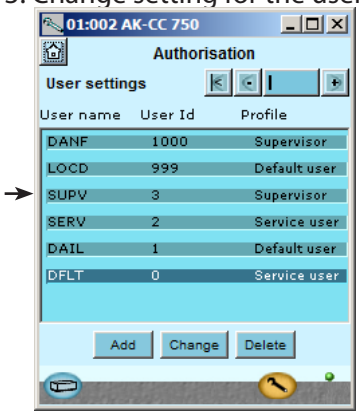

Mark the line with the user name **SUPV**.
Press the button **Change**

4. Select user name and access code

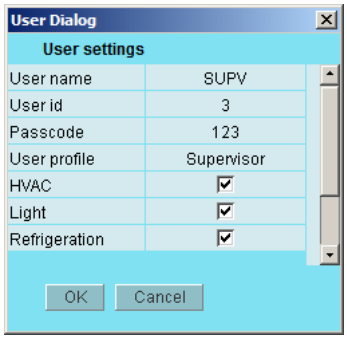

This is where you can select the supervisor for the specific system and a corresponding access code for this person.

The controller will utilize the same language that is selected in the service tool but only if the controller contains this language. If the language is not contained in the controller, the settings and readings will be shown in English.

5. Carry out a new login with the user name and the new access code

To activate the new settings you must carry out a new login to the controller with the new user name and the relevant access code.
You will access the login display by pressing the icon at the top left corner of the display.

Unlock the configuration of the controllers

1. Go to Configuration menu

2. Select Lock/Unlock configuration

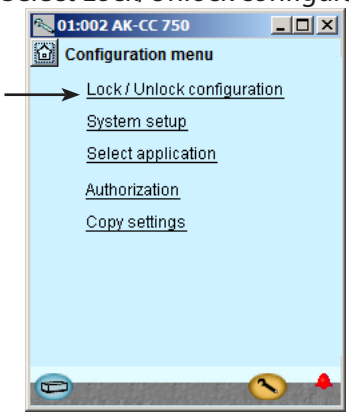

3. Select Configuration lock

Press the blue field with the text **Locked**

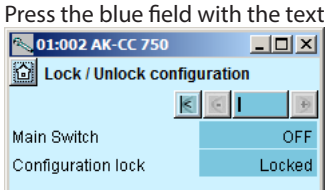

4. Select Unlocked

Select **Unlocked** and press **OK.**

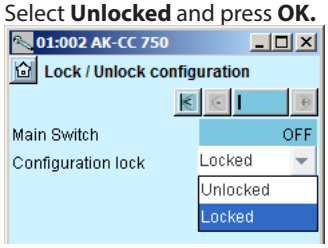

The controller can only be configured when it is unlocked.
It can only be adjusted when it is locked.

Changes to the input and output settings are only enabled when the controller is "Locked"

The values can be changed when it is locked, but only for those settings that do not affect the configuration.

In general
Many settings are dependent on previous settings. This is shown by the fact that a function can only be seen (and thus set) if an earlier parent function allows access to this subordinate function

For example, the "Configuration lock" line will not be shown if the main switch is set to On. Only when the main switch is set to Off, and regulation has therefore been stopped, is it possible to set the configuration lock.

If you want to know more about the different configuration options, they are listed below.
The number refers to the number and picture in the column on the left.

3-
Main Switch
Used to start and stop regulation.
When the main switch is set to Off, all outputs are in standby mode and all alarms are cancelled.
The main switch must be set to Off before the Configuration lock can be Unlocked.

Configuration lock
The controller can only be fully configured when the configuration lock is set to Unlocked.
The settings are only applied when it is set to Locked again. At this point, the controller checks the functions set and compares them with the input and output settings.
Important settings can then no longer be changed unless the configuration is unlocked again.

System setup

1. Go to Configuration menu

2. Select System setup

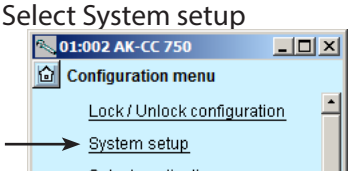

3. Set system settings

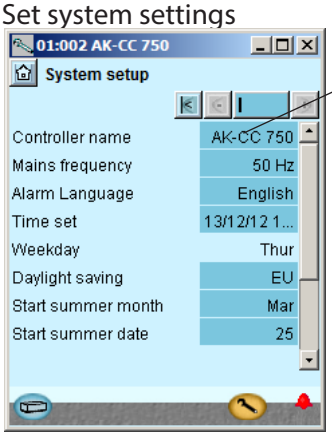

General
All system settings can be changed by pressing in the blue field with the setting and then indicating the value of the required setting.

3-
Controller name
In the first field you enter a name for what the controller will be controlling.

Main frequency
Set frequency.

Alarm language
Select the language that alarm text should be displayed in here.
Alarm text can be in a different language to the operating language.

Clock
When the time is set the PC's time can be transferred to the controller.
When the controller is connected to a network, date and time will automatically be set by the system unit in the network. This also applies to change-over Daylight saving.

Set plant type

1. Go to Configuration menu

2. Select plant type

Press the line **Select plant type**.

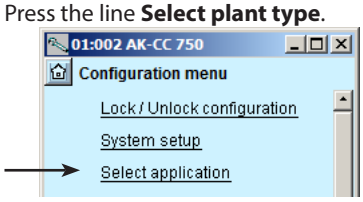

3. Set plant type

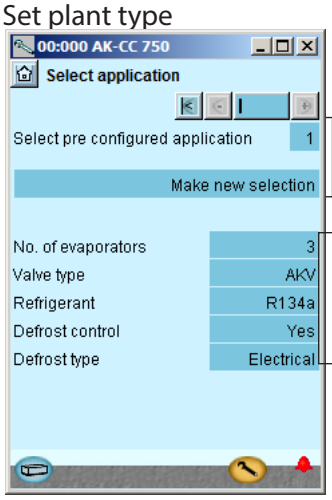

When the installation type is to be configured, it can be done in two ways:
Either one of these two

In the example, we have decided to use the second method. Here we select:
- 3 evaporators
- AKV valve
- Refrigerant = R134a
- Defrost
- Defrost = electric

4. Other settings

After the selection of application we will go through the other setup displays to check whether changes will have to be made on some of the predefined settings.
In our example we have to select a refrigerant, (which is done on the screen shown above) and we must add external start/stop settings (which is done in the subsequent "Common functions" screen).

- **Check the settings opposite the individual functions**

3-
Select pre-configured application
Group 1

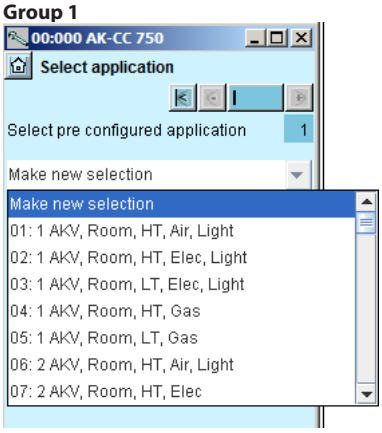

Or group 2

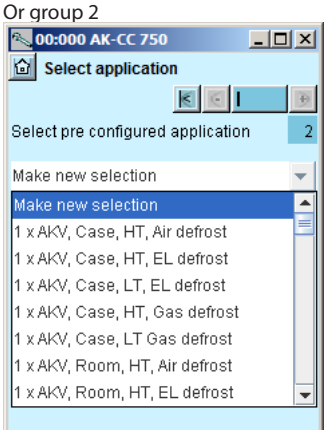

This setting give a choice between a number of predefined combinations, which at the same time determine the connection points.
At the end of the manual there is an overview of the options and connection points.

After configuration of this function, the controller will shut down and restart. After the restart, a large number of settings will have been made. These include the connection points. Continue with the settings and check the values.
If you change some of the settings, the new values will come into force.

Number of evaporators
Select the number of evaporators that you want the controller to regulate.

Valve type
Select the relevant type of valve here.
AKV valve
LLSV, solenoid valve (at thermostatic expansion valve).'
STEP (ETS / CCM / CCMT valve)
AO (analog voltage)

Refrigerant
Here you can select from a range of pre-defined refrigerants. If you cannot find the refrigerant you want in the list, select "User-defined". You can then set 3 constants which represent the refrigerant. You can obtain these 3 constants from Danfoss.

Defrost control
Select whether you want the evaporators to regulate with defrost.

Defrost type
You can select either natural defrost or electrical defrost, hotgas defrost or warm brine defrost.

Definition of thermostat

1. Go to Configuration menu

2. Select Common control

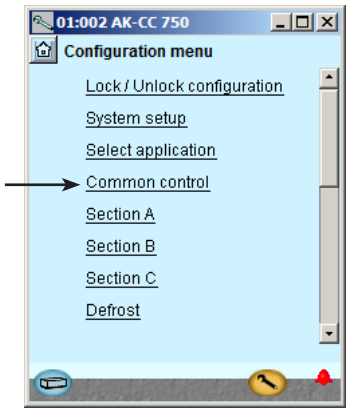

3. Select functions for thermostat

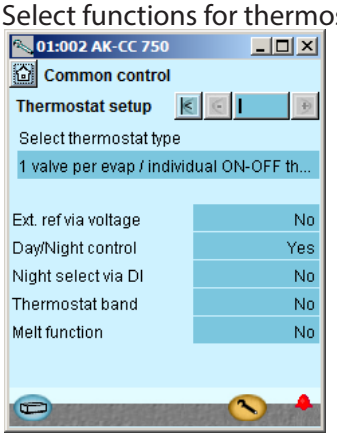

The setup menu has now changed. It now shows more settings all of which are based on the selected plant type.
For example, earlier we selected 3 evaporators. This means that 3 sections are now displayed.

In our example we select:
- On/off thermostat
- Individual thermostat on each section
- Night setback
- No melt function, as this is a frost appliance

The settings are shown here in the display.

Depending on your settings, further settings may then be available for the selected functions.
This list in the right-hand column contains all the possible functions that may be made available in one way or another.

If you want to know more about the individual functions than the brief description below, you will find additional information in Chapter 5 of the manual.

3 -
Thermostat type
Choose from the following thermostat functions:
- 1 valve for all /common ON-OFF thermostat
  Here, only one valve is used for all evaporators. The temperature is controlled by an ON/OFF thermostat on the basis of the settings in the A section.
- 1 valve per evap/ common ON/OFF thermostat
  Here, one valve per evaporator is used. The temperature is controlled in all evaporator sections by an ON/OFF thermostat on the basis of the settings in the A section.
- 1 valve per evaporator / individual ON/OFF thermostat
  Here, one valve per evaporator is used. The temperature is controlled individual by ON/OFF in each evaporator section.
- 1 valve per evaporator /individual modulating thermostat

Here, one valve per evaporator is used. The temperature is controlled individually in each evaporator section according to a modulating principle
External reference via voltage
Select whether to use an external voltage signal for displacement of the thermostat reference.
Offset at max. signal
Offset value at max. signal (5 or 10V).
Offset at min. signal
Offset value at min. signal (0,1 or 2V).
Day/ night control
Select whether the thermostat temperature is raised for night operation
(Night offset values must be set in the individual sections and in Kelvin)
Night displacement via DI
Select whether night displacement is to take place with an input signal. (Alternatively, the signal can be generated from the internal weekly schedule or from the system administrator via data communication.)
Thermostat band
Select whether you want the thermostat to switch between two reference settings (the values can be set in the individual sections)
Select whether the switch should be initialised by pulse pressure or by a switch.
Thermostat band select via DI
Select whether the reference is to be made with a signal on a DI input.
Melt function
Select whether you want the controller to perform a melting function
Melt interval
Set the time period between two melting intervals
Melt time
Set the melting time

Definition of sections

1. Go to Configuration menu

2. Select Section A

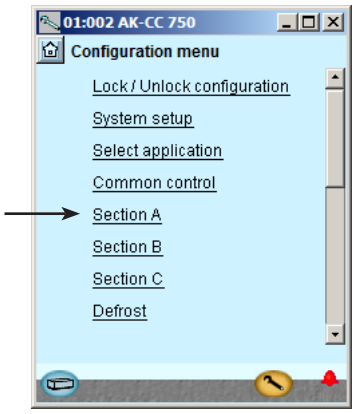

3. Set values for thermostat A

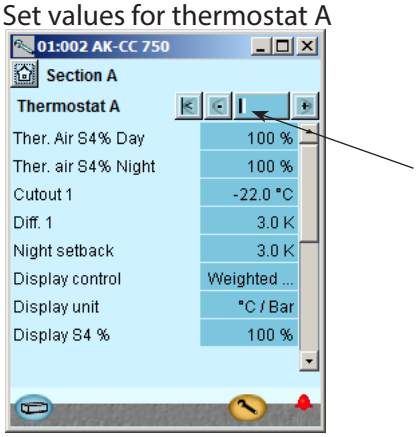

Example:
The settings are shown here in the display.

There are several pages, one after the other.
The black bar in this field tells you which of the pages is currently displayed.
Move between the pages using the + and - buttons.

Press the +-button to go on to the next page

4. Set values for alarm thermostat

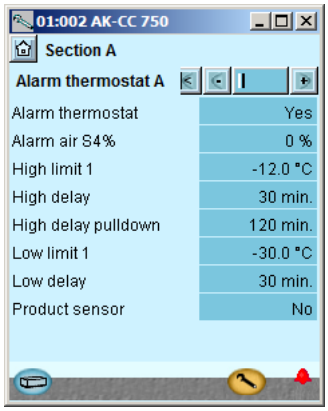

5. Define the other sections

Repeat the steps above for each section.

In our example, the settings are the same for all 3 sections.

3 -
Stepper valve
ETS 12½, 25, 50, 100, 250, 400, CCM, CCMT or User selection.
At User selection: + Max operating steps, Hysterese, Step rate, Holding current, Overdrive init, Phase current, Soft landing unit, Failsafe pos.
Thermostat temperature
In the case of a common thermostat: Choose which sensors are to be included in temperature regulation: Weighted S3A-S4A, lowest of all S3s, average of all S3s, highest of all S3s, lowest of all S4s, average of all S4s or highest of all S4s.
Air temperature S4 Day
Sensor selection for the thermostat during day operation
At 100%, only S4 is used. At a lower value, S3 is also used in the thermostat function. At 0%, only S3 is used in the thermostat function.
Air temperature S4 Night
As above, but for night operation
Cutout 1
The thermostat's cutout temperature - Thermostat band 1
Differential 1
Differential on regulation according to Thermostat band 1
Cutout 2
The thermostat's cutout temperature - Thermostat band 2
Differential 2
Differential on regulation according to Thermostat band 2
Night setback
Displacement of the reference during night operation
Display control
Select whether you want to connect to display type EKA 163B / EKA 164B to indicate the appliance temperature for section A. Settings are: non, weighted S3/S4 or product temperature sensor.
Display unit
Select whether you want temperatures and pressure displayed in SI units (°C) or US units (°F)
Display S4 %
Sensor selection for the temperature shown on the display
At 100%, only S4 is used. At a lower value, S3 is also used. At 0%, only S3 is displayed.
Display Offset
Any offset for the display readout
S4 Frost protection
Select whether an alarm is triggered in the case of low S4 temperature
S4 Frost limit
Set the alarm level for the S4 sensor.

4-
Alarm thermostat
Select whether you want to activate the alarm thermostat
Alarm air S4%
Set the weighting of the S4 sensor for the alarm thermostat
High alarm limit 1
Alarm limit for high temperature alarm, thermostat band 1
High alarm limit 2
Alarm limit for high temperature alarm, thermostat band 2
High delay
Time delay for a high temperature alarm
High delay pulldown
Time delay during pull-down and after defrost
Low alarm limit 1
Alarm limit for a low temperature alarm, thermostat band 1
Low alarm limit 2
Alarm limit for a low temperature alarm, thermostat band 2
Low delay
Time delay for a low temperature alarm
Product sensor
Indicate whether a product sensor is used
High alarm limit 1
Alarm limit for high product temperature, thermostat band 1
High alarm limit 2
Alarm limit for high product temperature, thermostat band 2
High delay
Time delay for a high product temperature alarm
High delay pulldown
Time delay during pull-down and after defrost
Low alarm limit 1
Alarm limit for a low product temperature, band 1
Low alarm limit 2
Alarm limit for a low product temperature, band 2
Low delay
Time delay for a low product temperature alarm

Definition of defrost functions

Note!
If the injection is controlled with a analog signal to a 3rd party valve the setting "Adaptive defrost" is not recommended.

1. Go to Configuration menu

2. Select Defrost function

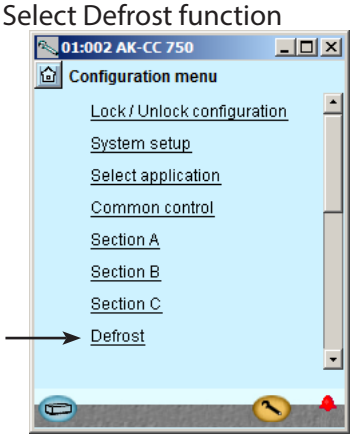

3. Set functions

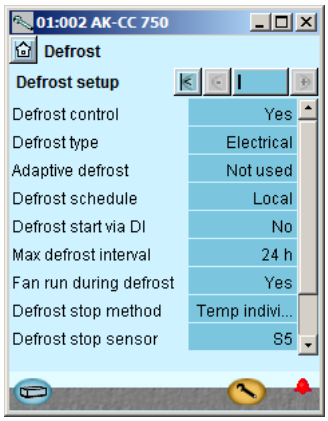

Example:
The settings are shown here in the display.

If the controller's internal defrost schedule is used to start defrost, the start times must be set using the everyday user interface. See page 65.

3 -
Defrost control
Select whether you want the controller to control defrost.
Defrost type
Choose a defrost method (electric / natural / hot gas or warm brine)
Adaptive defrost
The function can be set to: "Not used"/"Monitor ice"/"Permit cancellation of defrost for day (Skip day)"/"Skip day/ night"/"Full adaptive defrost".
Min. time between defrosts
Set how often defrosting is allowed.
Pc signal for AD (Adaptive defrost)
Choose which signal is to be followed: an internal signal (Local) or a signal via data communications (Network).
Defrost schedule
Choose which schedule is to be followed: an internal schedule or an external schedule from the system unit
Defrost start via DI
Select whether defrost should start when a signal is received on a DI input
Max. defrost interval between defrosts
Defrost is started at the set interval if it is not started using other methods (manual start, weekly schedule, network, DI). If defrost is started using a schedule, "Max. interval" should be set to a value greater than the longest period between two defrosts in the schedule.
Fan run during defrost
Specify whether the fans should be on during defrost.
Defrost stop method
Define whether defrost is to be concluded with:
• Time, Temperature individual in each section or Temperature common for all sections
Defrost term sensor
Select the sensor that you want to give the signal for defrost stop
Stop temperature A, B, C, D
Set the temperature at which defrost should stop
Max. defrost time
Defrost will stop after this period, even if the defrost temperature has not been reached
Min. defrost time
Defrosting **cannot** be stopped until the set time has expired. The setting has higher priority than "Max. defrost time"
Pump down delay
Time delay before defrost when the fluid injection stops and the evaporator is emptied of liquid
Hot gas delay
Delay time before opening of hot gas valve
Drip off delay
Time delay after defrost to allow water droplets to drip off the evaporator before refrigeration is restarted
Drain delay
Delay in which the drain valve is kept open in order to ensure pressure equalisation
Fan delay
Maximum permitted fan delay following defrost
Fan start temperature
The fans will start when the temperature at the defrost sensor falls below this value.
Drip tray heater
Set whether there is to be heating in the drip tray
Drip tray heater delay
Set heating time (time from the point at which defrost stops)
Max. Hold time
Maximum hold time that the controller will wait for the signal to restart refrigeration (used with coordinated defrost)
Show advanced adaptive defrost
All settings for this function are expert settings.

Definition of common functions

1. Go to Configuration menu

2. Select Common functions

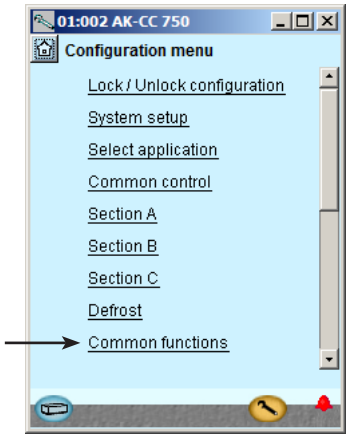

3. Set functions in the first display

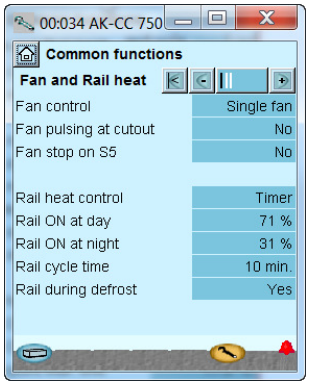

Press the +-button to go on to the next page

4. Set the functions in another display

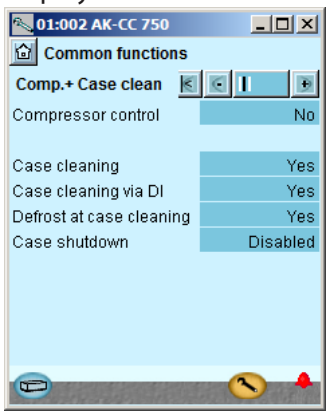

Press the +-button to go on to the next page

Example:
The settings are shown here in the display.

Example:
The settings are shown here in the display.

3-
Common functions for fans and rail heat
Fan control
Select required fan control:
• Single fan (one relay)
• two speed fan (two relais)
• EC fan (analogue voltage output)
• VSD fan (analogue voltage output + one start relay)
Fan pulsing at cutout
Select whether you want the fans to pulse during the thermostat's cutout period. Pulsing can be restricted to either: "night operation only" (appliance with night cover) or "both day and night operation" (cold storage room)
Fan eco during thermostat cutout
Select when the fans should run on low speed:
• Never
• Both day and night
• Night only
Fan ON % (at single fan)
Set how long the fans should be ON during pulsing. Enter as a percentage of the pulse period.
Fan duty cycle (at single fan)
Set the fan's operation period for pulsing
Fan day (at EC or VSD)
Fan speed during normal day operation
Fan night (at EC or VSD)
Fan speed during normal night operation
Fan day eco (at EC or VSD)
Fan speed during day operation and thermostat cutout-
Fan night eco (at EC or VSD)
Fan speed during night operation and thermostat cutout
EC min start speed (at EC or VSD)
Lowest speed the first 10 seconds after start
Fan stop on S5
Select whether the fans should stop if the S5A temperature is too high. Used to stop the fans if refrigeration is not working.
Fan stop temp.
Set the temperature limit for the S5A sensor at which the fans stop
Rail heat control
Select whether to use pulsing/rail heat control. Non/Timer or Dew point.
Rail ON at day
Set how long the rail heat should be ON for during day operation. Enter as a percentage of the rail heat pulse period
Rail heat at night
Set how long the rail heat should be ON for during night operation. Enter as a percentage of the rail heat pulse period.
Dew point max. limit
At a dew point above this value, rail heat is 100%.
Dew point min limit
At a dew point below this value, rail heat is controlled with the next setting "Min ON".
Rail heat Min ON%
Period in which the dew point is below the min. limit.
Rail heat cycle time
Rail heat pulse period.
Rail heat during defrost
Select whether you want the rail heat to be OFF during defrost.

4-
Common functions for compressor and case cleaning
Compressor control
Select whether you want to use compressor control
Min. ON time
Set the minimum runtime for the compressor once it has started
Min. Restart time
Set the minimum time between the compressor stopping and restarting
Runtime total
Set any runtime for the compressor

5. Set the functions in the third display

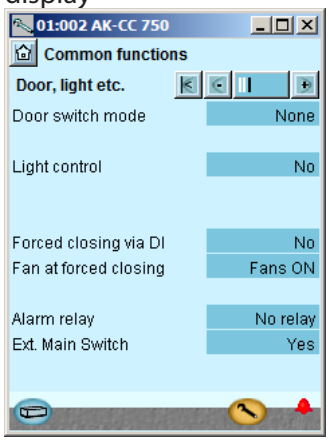

Example:
The settings are shown here in the display.

Case cleaning
Select whether you want an case cleaning function
Case cleaning via DI
Select whether to use a digital input to activate the case cleaning function. Alternatively the case cleaning function can be activated from the display or using a parameter setting
Defrost at case cleaning
Select whether to activate the case cleaning function with a defrost sequence. Used for frost appliances to achieve fast defrost of the appliance before cleaning.
Appliance shutdown
Select function for light and fans when appliance shut down
5-
Common functions for door, light etc.
Door switch mode
Select the function of any door switch. The door switch can be used in one of the following two ways:
- Alarm only, if the door has been left open for too long
- Stop refrigeration and fans when the door is open, along with an alarm if the door has been left open for too long

Light off delay
Set how long the light should remain on after the door has been closed (requires a light control to be set up and controlled via the door switch)
Restart refrig. delay
Set how long the door may be open before refrigeration and fans are restarted. Prevents exposure of the products to too high a temperature if someone forgets to close the door.
Door alarm delay
If the door has been open for more than the time delay set here, a door alarm is triggered
Light control
Select whether the light should be controlled by a door switch, a day/night signal or by a signal via data communication
Light at Main SW = Off
Choose whether the light is to be switched off when the main switch is set to off, or if the light is to follow the standard light control.
Control of Blinds control
Set whether the blinds are to be controlled by a relay.
Open/close blinds via DI
Set whether the controller is to receive a signal which activates the blinds. This must be a pulse signal.
Fan stop during close night blinds
Set the number of seconds the fans must be switched off.
Forced closing via DI
Select whether a digital input is used for the forced closing of injection
Fan at forced closing
Select whether or not you want the fans to operate during forced closing and whether defrosting is to be permitted during this period.
Alarm relay
Select the alarm relay function.
The alarm relay must be activated by alarm priorities:
- low to high
- low to medium
- high

The alarm relay can be activated either by all alarm priorities from low to high or only by high priority alarms
Ext. main switch
Select whether you want a main switch via a digital input. When the main switch is set to Off, all regulation is stopped, all outputs are set to standby and all alarms are cancelled.

Setup general alarm inputs

1. Go to Configuration menu

2. Select General alarm inputs

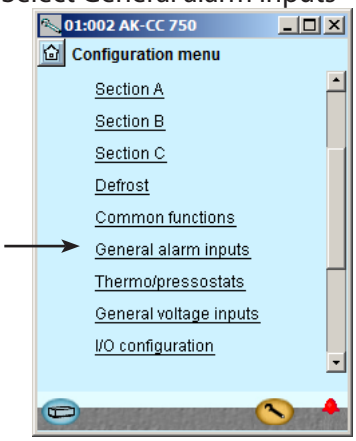

3. Define the required alarm functions

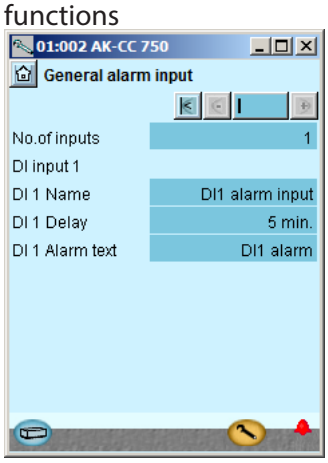

In our example we are not using this function so the image is more for information purposes.
The name of the function can be xx and the alarm text can be entered further down the screen).

3 - General alarm input
This function can be used to monitor all kinds of digital signals.
No. of inputs
Set the number of digital alarm inputs
Adjust for each input
- **Name**
- **Delay time for DI alarm**
- **Alarm text**

Setup separate thermostat functions

1. Go to Configuration menu

2. Select Thermostats

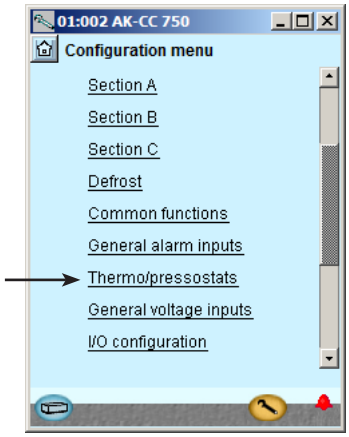

3. Define the required thermostat function

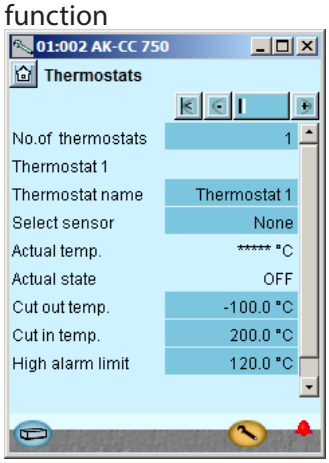

In our example we are not using this function so the image is more for information purposes.
The name of the function can be xx and the alarm text can be entered further down the screen).

Via the +- button you can move to similar settings for the pressure control functions. (Not used in the example)

3 - Thermostats
The general thermostats can be used to monitor the temperature sensors that are used in the control, as well as 4 extra temperature sensors. Each thermostat has a separate outlet to control external automation.
No. of thermostats
Set the number of general thermostats. (1-5)
For each thermostat adjust
• Name
• Which of the sensors is used
Actual temp.
Temperature measurement on the sensor that is attached to the thermostat
Actual state
Actual status on the thermostat outlet
Cut out temp.
Cut-out value for the thermostat
Cut in temp.
Cut-in value for the thermostat
High alarm limit
High alarm limit
Alarm delay high
Time delay for high alarm
Alarm text high
Indicate alarm text for the high alarm
Low alarm limit
Low alarm limit
Alarm delay low
Time delay for low alarm
Alarm text low
Indicate alarm text for low alarm

3b - Pressostats
There are equal settings for up to 5 pressostat functions

Setup separate voltage functions

1. Go to Configuration menu

2. Select General Voltage inputs

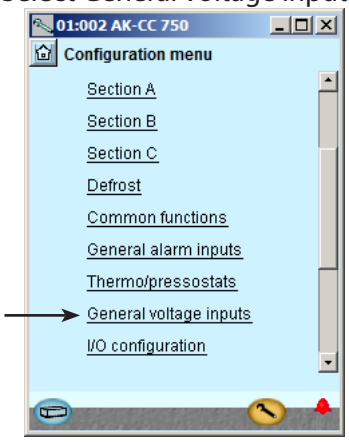

3. Define the required names and values attached to the signal

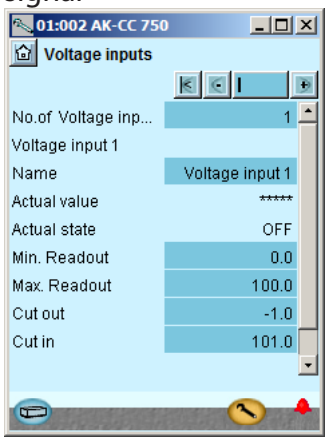

In our example we are not using this function so the image is more for information purposes.
The name of the function can be xx and the alarm text can be entered further down the screen).
The values "Min. and Max. Readout" are your settings representing the lower and upper values of the voltage range. 2V and 10V, for example. (The voltage range is selected during the I/O setup).

For each voltage input defined the controller will reserve a relay output in the I/O setup.
It is not necessary to define this relay if all you require is an alarm message via the data communication.

3 - Voltage inputs
The general volt inlet can be used to monitor external voltage signals. Each volt inlet has a separate outlet to control external automatic controls.
No. of voltage inp.
Set the number of general voltage inputs, specify 1-5:
Name
Actual value
= read-out of the measurement
Actual state
= read-out of outlet status
Min. readout
State read-out values at minimum voltage signal
Max. readout
State read-out values at maximum voltage signal
Cutout
Cut-out value for outlet (scaled value)
Cutin
Cut-in value for outlet (scaled value)
Cutout delay
Time delay for cut-out
Cut in delay
Time delay for cut-in
Limit alarm high
High alarm limit
Alarm delay high
Time delay for high alarm
Alarm text high
Set alarm text for high alarm
Limit alarm low
Low alarm limit
Alarm delay low
Time delay for low alarm
Alarm text low
Indicate alarm text for low alarm

Configuration of inputs and outputs

1. Go to Configuration menu

2. Select I/O configuration

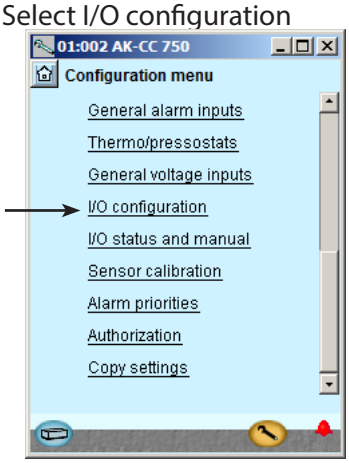

3. Configuration of Digital outputs

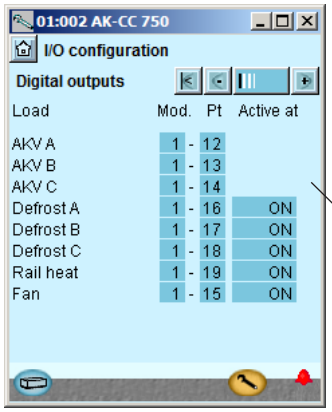

Press the +-button to go on to the next page

4. Setup On/off input functions

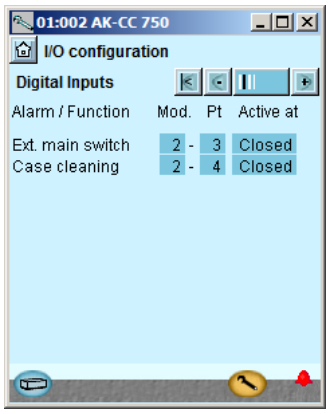

Press the +-button to go on to the next page

The following displays will depend on the earlier definitions. The displays will show which connections the earlier settings will require. The tables are the same as shown earlier.
- Digital outputs
- Digital inputs
- Analog outputs
- Analog inputs

Important!
An AKV function can only be set for module 1 and only for points 12, 13, 14 and 15

Load	Output	Mod-ule	Point	Active at
AKV A	DO1	1	12	-
AKV B	DO2	1	13	-
AKV C	DO3	1	14	-
Fan	DO4	1	15	ON
Defrost A	DO5	1	16	ON
Defrost B	DO6	1	17	ON
Defrost C	DO7	1	18	ON
Rail heat	DO8	1	19	ON

We set up the controller's digital outputs by keying in which module and point on this module each one of these has been connected to.
We furthermore select for each output whether the load is to be active when the output is in pos. **ON** or **OFF**.

3 - Outputs
The possible functions are the following:
AKV or solenoid valve
Defrost (el/hot gas)
Common defrost
Suction line valve
Drain valve
Drip tray heat
Night blind
Compressor
Rail heat
Light
Fan
Alarm
Thermostat 1 - 5
Pressostat 1 - 5
Voltage input 1 - 5

Function	Input	Mod-ule	Point	Active at
External start/stop	AI3	2	3	Closed
Case cleaning (pulse pressure)	AI4	2	4	Closed

We set up the controller's digital input functions by keying in which module and point on this module each one of these has been connected to.
We furthermore select for each output whether the function is to be active when the output is in pos. **Closed** or **Open**.

4 - Digital inputs
The possible functions are the following:
Night displacement
Door alarm
Forced closing
Ext. Main switch
Thermostat band
Defrost start
Case cleaning
Appliance shutdown
Open / close Night blinds
DI alarm input 1-10

Analog output
(settings are not shown)
The possible signals are as follow:
0 – 10 V
2 – 10 V
0 – 5 V
1 – 5V
The type of Step valve defined in earlier sectons.

5. Configuration of Analog Input signals

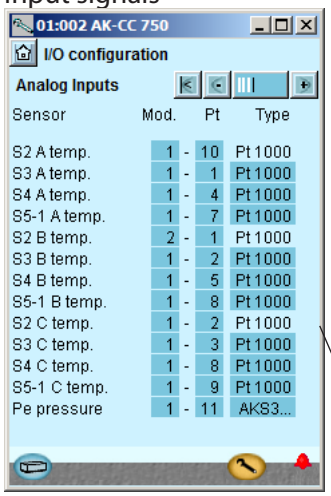

Sensor	Input	Module	Point	Type
Air temperature S3 A	AI1	1	1	Pt 1000
Air temperature S3 B	AI2	1	2	Pt 1000
Air temperature S3 C	AI3	1	3	Pt 1000
Air temperature S4 A	AI4	1	4	Pt 1000
Air temperature S4 B	AI5	1	5	Pt 1000
Air temperature S4 C	AI6	1	6	Pt 1000
Defrost sensor S5 A	AI7	1	7	Pt 1000
Defrost sensor S5 B	AI8	1	8	Pt 1000
Defrost sensor S5 C	AI9	1	9	Pt 1000
Gas temperature -S2 A	AI10	1	10	Pt 1000
Evaporating pressure - P0	AI11	1	11	AKS32R-12
Gas temperature -S2 B	AI1	2	1	Pt 1000
Gas temperature -S2 C	AI2	2	2	Pt 1000

We set up the analog inputs for the sensors.

5 - Analog inputs
The possible signals are the following:

Temperature sensors:
S2 Evaporating temp. (A,B,C,D)
S3 Air temp. before evaporator (A,B,C,D)
S4 Air temp. after evaporator (A,B,C,D)
S5-1 Defrost sensor (A,B,C,D)
S5-2 Defrost sensor (A,B,C,D)
Saux 1 - 4
Product temperature (A,B,C,D)
Setting:
- Pt1000
- PTC 1000

Pressure transmitters:
P0 evaporator pressure
Pc Cond. pressure
Paux 1 - 3
Setting:
- AKS 32, -1 – 6 Bar
- AKS 32R, -1 – 6 Bar
- AKS 32, - 1 – 9 Bar
- AKS 32R, -1 – 9 Bar3
- AKS 32, - 1 – 12 Bar
- AKS 32R, -1 – 12 Bar
- AKS 32, - 1 – 20 Bar
- AKS 32R, -1 – 20 Bar
- AKS 32, - 1 – 34 Bar
- AKS 32R, -1 – 34 Bar
- AKS 32, - 1 – 50 Bar
- AKS 32R, -1 – 50 Bar
- AKS 2050, 1 – 59 Bar
- AKS 2050, -1 – 99 bar
- AKS 2050, -1 – 159 bar

Voltage signals for reference displacement:
Ext. Ref. Signal
General voltage inputs 1 - 5
Setting:
- 0 - 5 V,
- 1 - 5 V,
- 0 -10 V,
- 2 - 10 V

Set alarm priorities

1. Go to Configuration menu

2. Select Alarm priorities

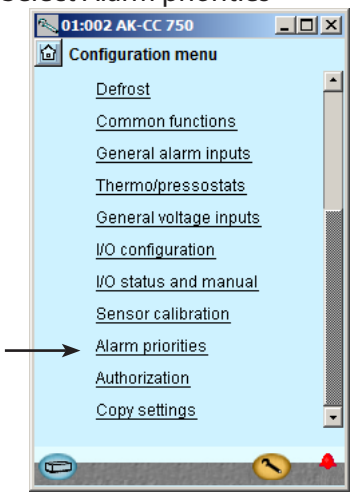

3. Set priorities for Temperature alarms

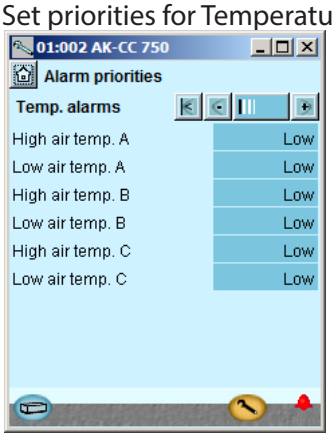

Press the +-button to go on to the next page

4. Set Alarm priorities for sensor error

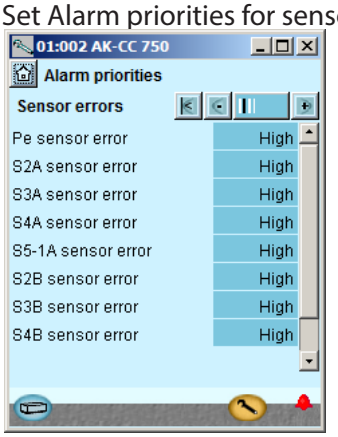

Press the +-button to go on to the next page

Very many functions have an alarm connected.
Your choice of functions and settings has connected all the relevant alarms that are current. They will be shown with text in the three pictures.
All alarms that can occur can be set for a given order of priority:
• "High" is the most important one
• "Log only" has lowest priority
• "Disconnected" gives no action
The interdependence between setting and action can be seen in the table.

Setting	Log	Alarm relay selection			Net-work	AKM-dest.
		Non	High	Low - High		
High	X		X	X	X	1
Medium	X			X	X	2
Low	X			X	X	3
Log only	X					4
Discon-nected						

In our example we select the settings shown here in the display

In our example we select the settings shown here in the display

5. Set Alarm priorities for "Various alarms"

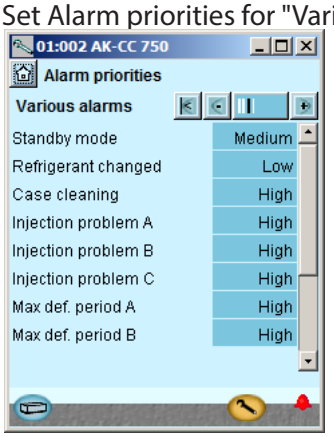

Press the +-button to go on to the next page

6. Set Alarm priorities for General functions

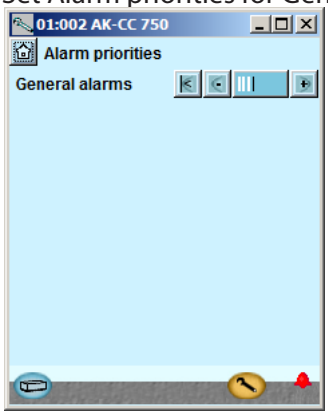

In our example we select the settings shown here in the display

There are no general alarms in our example.

Lock configuration

1. Go to Configuration menu

2. Select Lock/Unlock configuration

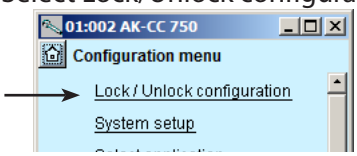

3. Lock Configuration

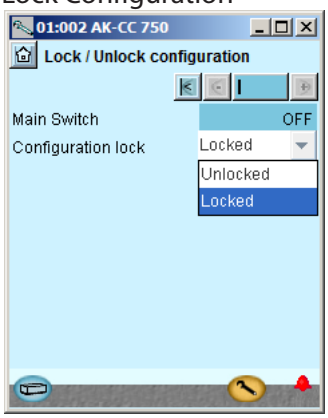

The controller will now make a comparison of selected functions and define inputs and outputs. The result can be seen in the next section where the setup is controlled.

Press in the field against **Configuration lock.**

Select **Locked**.

The setup of the controller has now been locked. If you subsequently want to make any changes in the controller's setup, remember first to unlock the configuration.

Check configuration

1. Go to Configuration menu

2. Select I/O configuration

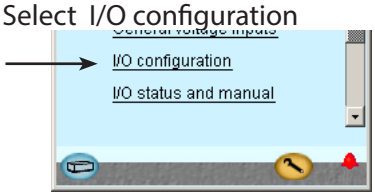

3. Check configuration of Digital Outputs

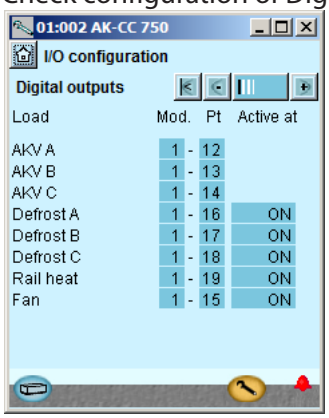

Press the +-button to go on to the next page

4. Check configuration of Digital Inputs

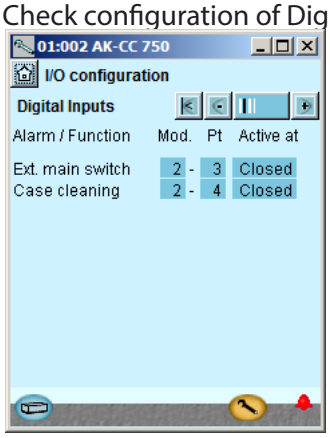

Press the +-button to go on to the next page

5. Check configuration of Analog Outputs

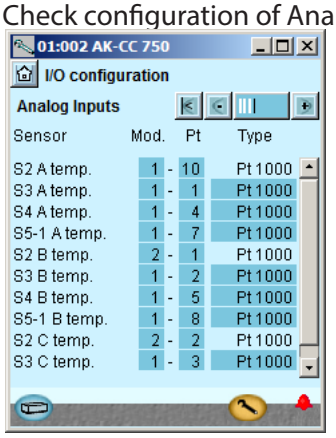

This control requires that the setup is locked

(Only when the setup is locked are all settings for in- and outputs activated.)

The setup of the digital outputs appears as it is supposed to according to the wiring made.

The setup of the digital inputs appears as it is supposed to according to the wiring made.

(In our example we do not use the analoge outputs)

The setup of the Analog inputs appears as it is supposed to according to the wiring made.

An error has occurred, if you see the following:

A **0 – 0** next to a defined function.
If a setting has reverted to 0-0, you must control the setup again.
This may be due to the following:

- A selection has been made of a combination of module number and point number that does not exist.
- The selected point number on the selected module had been set up for something different.

The error is corrected by setting up the output correctly.

Remember that the setup must be unlocked before you can change module and point numbers..

The settings are shown on a **RED** background.
If a setting has turned red, you must control the setup again.
This may be due to the following:

- The input or the output has been set up; but the setup has later been changed so that it should no longer be applied.

The problem is corrected by setting **module number to 0 and point number to 0.**

Remember that the setup must be unlocked before you can change module and point numbers.

Check of connections

1. Go to Configuration menu

2. Select I/O status and manual

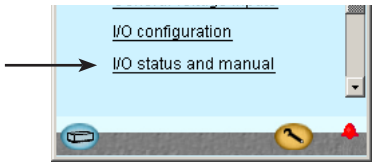

3. Check Digital Outputs

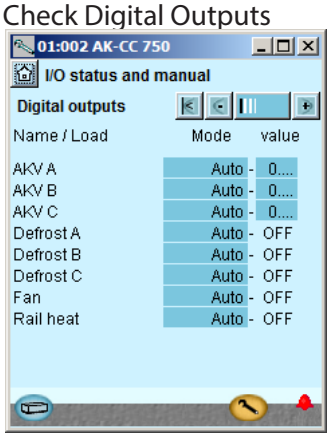

Press the +-button to go on to the next page

4. Check Digital Inputs

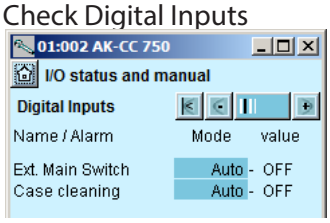

Press the +-button to go on to the next page

5. Check Analog inputs

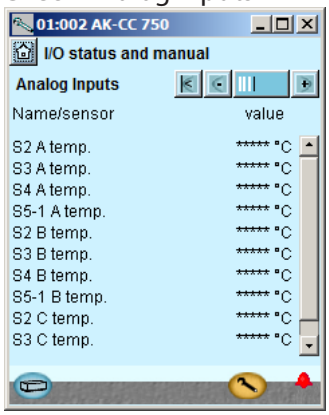

Before the control is started we check that all inputs and outputs have been connected as expected.

This controls requires that the setup is locked

By means of the manual control of each output it can be checked whether the output has been correctly connected.

AUTO	The output is controlled by the controller
MAN OFF	The output is forced to pos. OFF
MAN ON	The output is forced to pos ON

Activate the various functions (the door switch and the main switch). Check that the controller registers the activation – i.e. whether the ON/OFF value is changed in the last column.
Check the other digital inputs in the same way.

(In our example we do not use the analoge outputs)

Check that all sensors show sensible values.

In our case we have no value. This may be due to the following:

- The sensor has not been connected.
- The sensor is short-circuited/interrupted
- The point or module number has not been set up correctly.
- The configuration is not locked.

Check of settings

1. Go to the overview

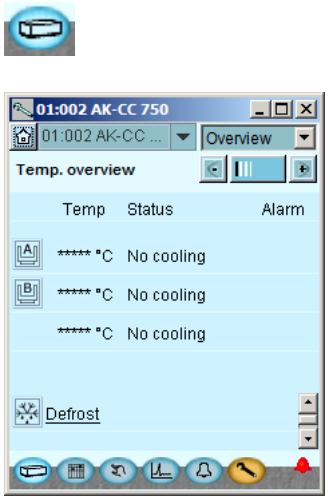

2. Select evaporator A

3. Settings for thermostat

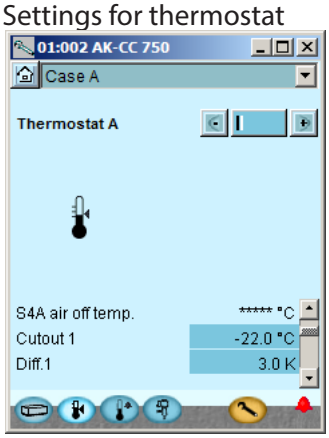

4. Move on with the next display for the section. Here the alarm thermostat

Press the blue overview button at the bottom left of the display.

5. Settings for alarm thermostat

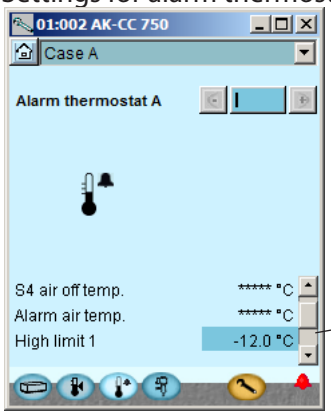

Before the control starts, we check that all the settings are as they should be.

The overview display will now show one line for each of the general functions. Behind each icon there is a number of displays with the different settings. It is all these settings that have to be checked.

Remember the settings at the bottom of the pages – the ones that can only be seen via the "Scroll bar".

Page 2 shows a summary of the temperature sequence over the past 24 hours.

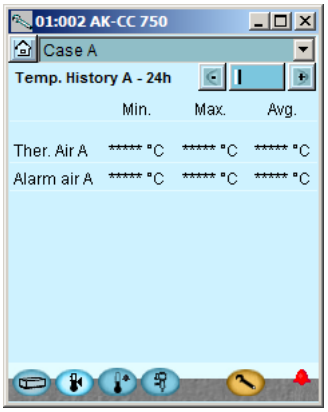

Remember the settings at the bottom of the pages – the ones that can only be seen via the "Scroll bar"."

6. Move on with the next display for the section. Here the expansion valve function

Press the blue overview button at the bottom left of the display..

7. Settings for the injection function

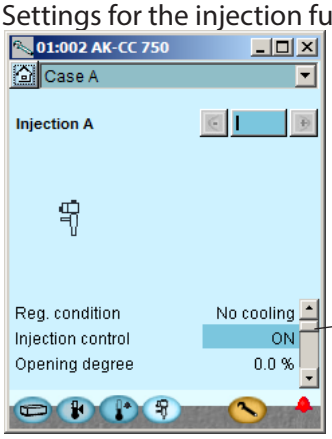

Remember the settings at the bottom of the pages – the ones that can only be seen via the "Scroll bar".

8. Repeat for Evaporator B and later again for C

,

The settings can be reviewed in the same way as for section A.

9. Go to defrost display

Press the blue overview button at the bottom left of the display and then press the defrost symbol

,

10. Settings for defrost

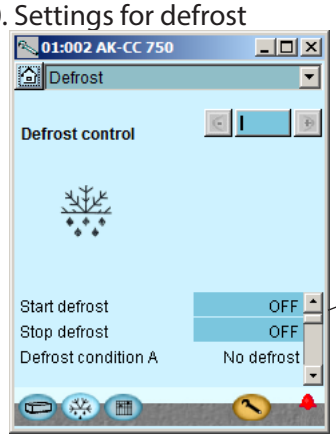

Remember the settings at the bottom of the pages – the ones that can only be seen via the "Scroll bar".

11. Go to defrost schedule

Press the **schedule** button to continue to the defrost schedule

12. Setup defrost schedule

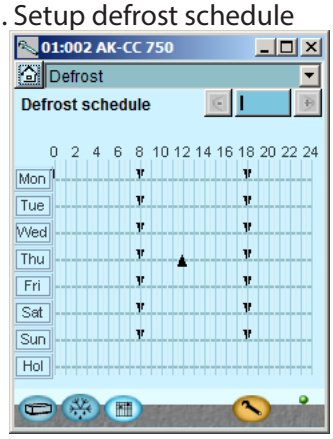

13. Press a weekday and set the times for the various defrost starts.

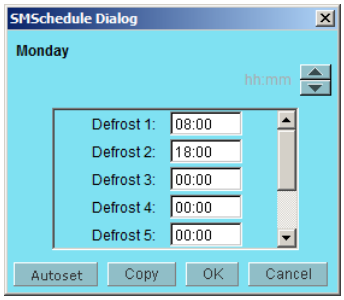

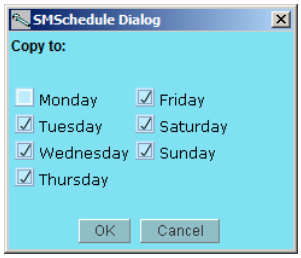

Use the copying functions if there are several days with identical defrosts.

The end result with two defrosts per 24 hours can be seen here above.

14. Go to common functions

Press the blue overview button at the bottom left of the display and then on common functions

,
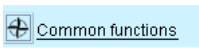

15. The settings for the common functions

Go through the individual functions.

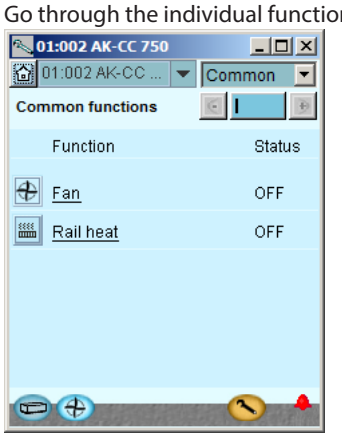

16. The controller setup has been completed.

In our example, the defrost schedule is set to defrost twice a day.

Installation in network

1. Set the address (here, for example 3)

   Turn the right-hand address switch so that the arrow will point at 3.

   The arrow of the two other address switches must point at 0.

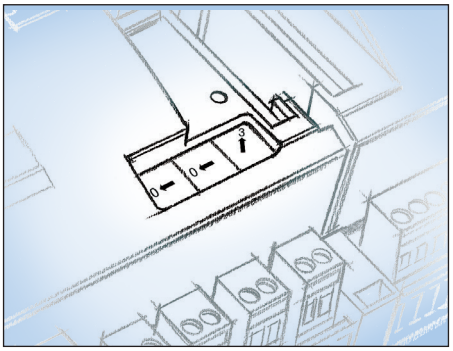

2. Push the Service Pin

   Press down the service pin and keep it down until the Service Pin LED lights up.

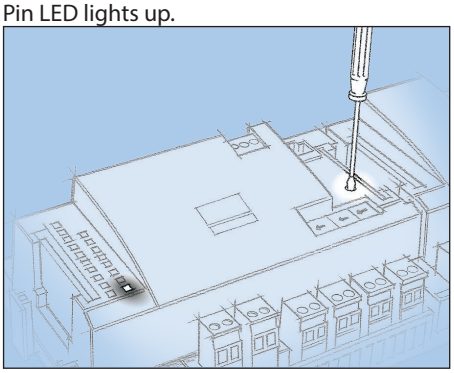

3. Wait for answer from the system unit

   Depending on the size of the network it may be up to one minute before the controller receives an answer as to whether it has been installed in the network.

   When it has been installed the Status LED will start to flash faster than normal (once every half second). It will continue with this for about 10 minutes

4. Carry out new login via Service Tool

   If the Service Tool was connected to the controller while you installed it in the network, you must carry out a new login to the controller via the Service Tool.

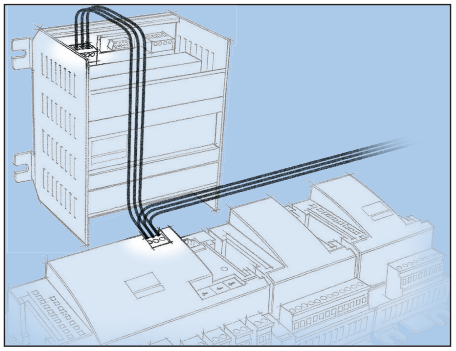

The controller has to be remote-monitored via a network. In this network we assign address number 3 to the controller.

The same address must not be used by more than one controller in the same network.

Requirement to the system unit

The system unit must be a gateway type AKA 245 with software version 6.0 or higher. It is capable of handling up to 119 AK controllers. Alternatively, it can be an AK-SM 720. It is capable of handling up to 200 AK controllers.

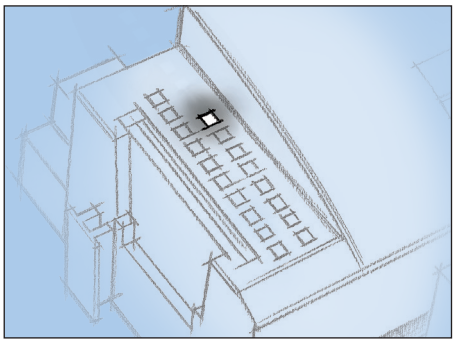

If there is no answer from the system unit

If the Status LED does not start flashing faster than normal, the controller has not been installed in the network. The reason for this may be one of the following:

The controller has been assigned an address out of range

Address 0 cannot be used.

If the system unit in the network is an AKA 243B Gateway only the addresses between 1 and 10 can be used.

The selected address is already being used by another controller or unit in the network:

The address setting must be changed to another (vacant) address.

The wiring has not been carried out correctly.
The termination has not been carried out correctly.

The data communication requirements are described in the document: "Data communication connections to ADAP-KOOL® Refrigeration Controls" RC8AC.

First start of control

Check alarms

1. Go to the overview

Press the blue overview button at the bottom left of the display.

2. Go to the Alarm list

Press the blue button with the alarm bell at the bottom of the display.

3. Check active alarms

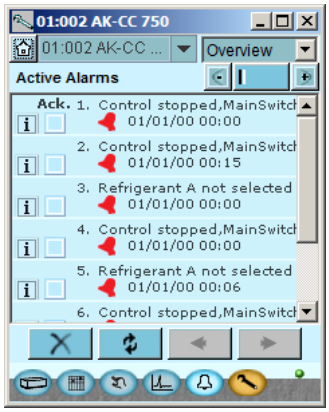

In our case, we have a series of alarms. We will tidy them up so that we only have those that are relevant.

4. Remove cancelled alarm from the alarm list

Press the red cross to remove cancelled alarms from the alarm list.

5. Check active alarm again

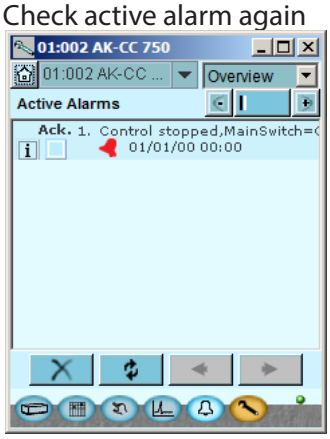

In our case an active alarm remains because the control has stopped. This alarm must be active when control has not started. We are now ready for the startup of control.

Please note that active plant alarms are automatically cancelled when the main switch is in pos. OFF.
If active alarms appear when the control is started the reason for these should be found and remedied.

Start the control

1. Go to Start/Stop display

Press the blue manual control button at the bottom of the display.

2. Start control

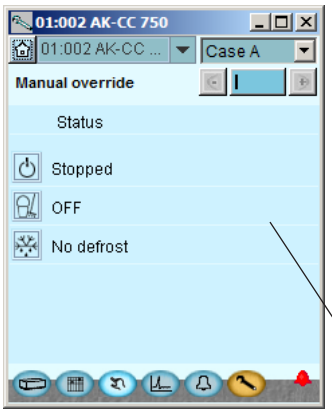

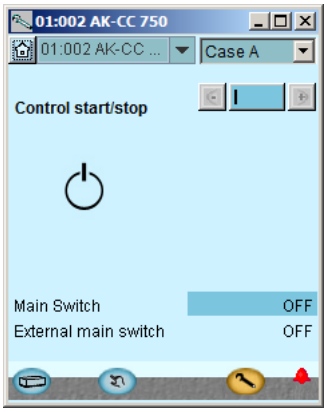

Press in the field against **Main switch**.
Select **ON**.

The controller will now start the controlling when the external function switch is also activated to ON.

If you wish to start an extra defrost cycle, it can be done via this display and also from the defrost screen.

Setup logs

1. Go to the overview

Press the blue overview button with the log symbol.

2. Log display

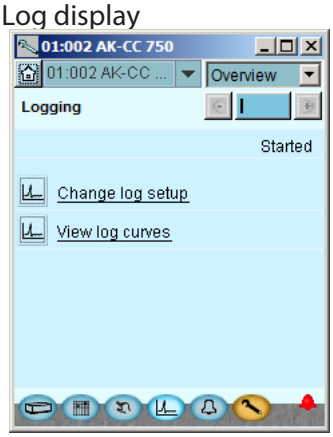

The top line gives access to definition of new logs and to changes of already established logs.
The next line enables you to see a selection of the defined logs

3. New logs

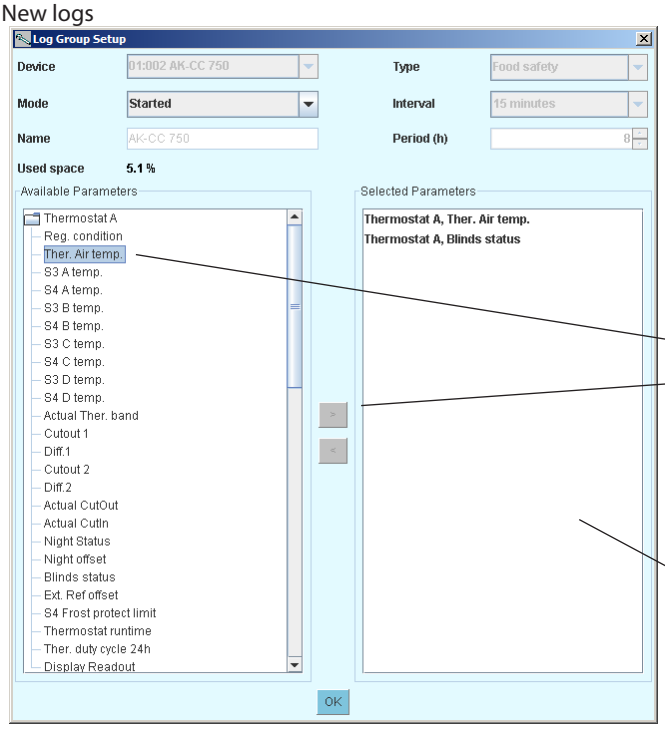

Here is the start display for new logs
Start by defining which type of log has to be defined

Here it is determined which parameters have to be included in the setup of data.
Select a function here, then a parameter, and finish with OK.
Press hereafter "Arrow right"

Here is the survey of all the parameters that are collected in the log.
If a parameter has to be removed from the log collection, you must select the parameter and then press "Arrow left".

A LOG CAN ONLY BE DISPLAYED IF:
- THE CLOCK HAS BEEN SET AND
- THE CONFIGURATION IS LOCKED

Manual defrost

1. Go to Configuration menu

2. Select defrost

3. Start defrost

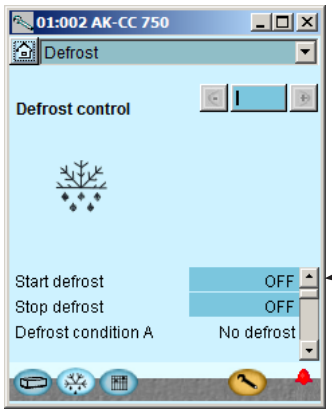

If you want to carry out manual defrost, proceed as follows.

Activate

5. Regulating functions

This section describes how the different functions work

Introduction

Application
AK-CC 750 controllers are complete regulating units which together with valves and sensors constitute complete evaporator controls for refrigeration appliances and freezing rooms within commercial refrigeration.
Generally speaking they replace all other automatic controls containing, inter alia, day and night thermostats, defrost, fan control, rail heat control, alarm functions, light control, etc.
The controller is equipped with data communication and is operated via a PC.
In addition to evaporator control the controller can give signals to other controllers about the operating condition, e.g. forced closing of expansion valves, alarm signals and alarm messages..

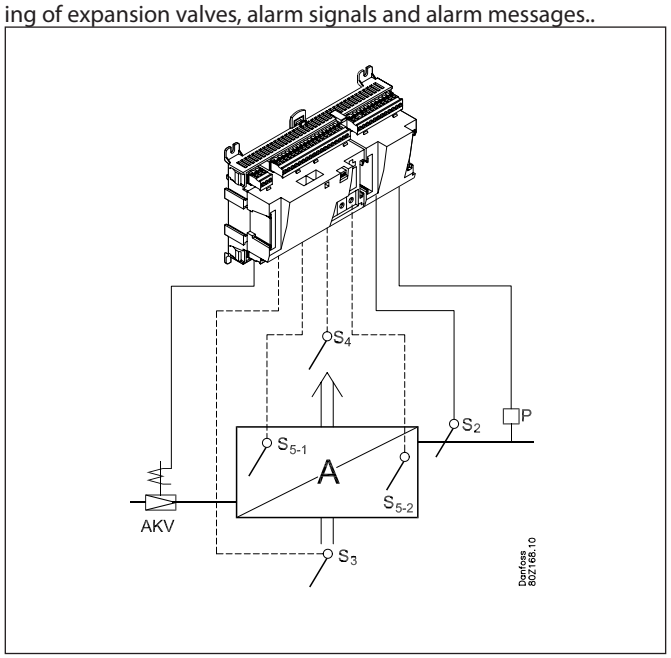

The controller's main function is to control the evaporator so that the system constantly operates with the most energy-friendly refrigeration.
A specific function for registration of the need for defrost will adapt the number of defrosts so that no energy is wasted on unnecessary defrosts and subsequent cooling-down cycles.

Among the different functions can briefly be mentioned:
- Control of up to four evaporator sections
- Electronic injection with AKV or ETS valve
- ON/OFF or modulating temperature control
- Weighted thermostat and alarm thermostat
- Defrost on demand based on evaporator capacity
- Appliance cleaning function
- Appliance shutdown via data communication

(The functions may not be mixed across the various sections of the evaporator.)

The complete survey of controllers and functions can be seen in the manual chapter 2 in section "Design o a evaporator control".

Examples
The controller has been designed to control one of the following four plant types.
Through the programming you determine which one.

Evaporator control of one, two, three or four evaporators

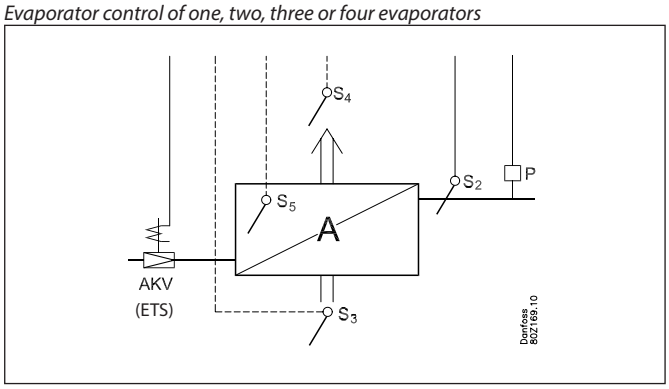

Control of cool or defrost room

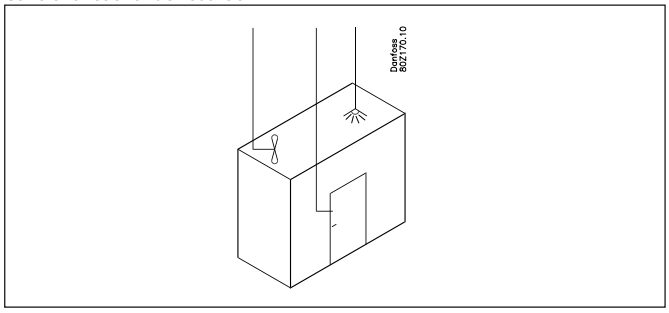

Control of cool or defrost appliance

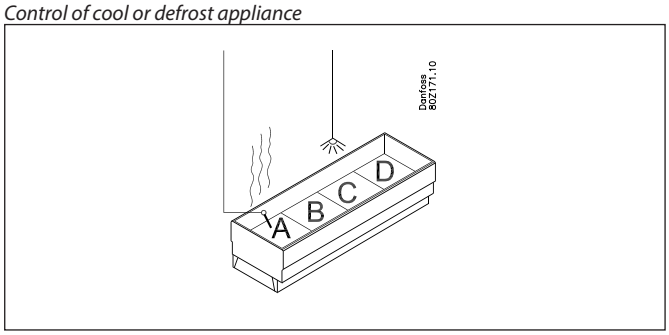

- *The refrigerant is either regulated by means of:*
  - expansion valve type AKV or
  - solenoid valve and thermostatic expansion valve

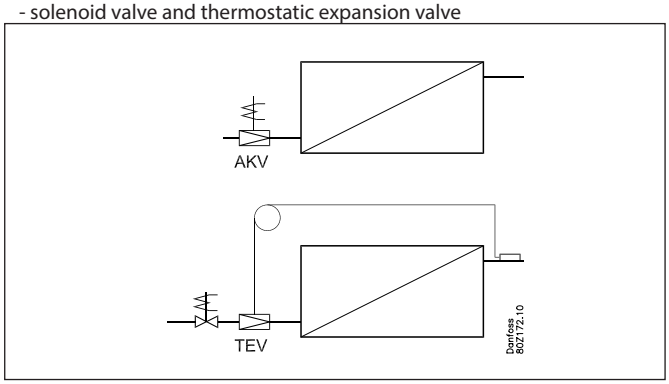

Thermostat function

Valve type and thermostat

Principle
Up to 4 valves can be connected to the controller; one for every solid state output.
It is possible to use electrically controlled expansion valves type AKV (ETS) for regulation, or else injection can take place using thermostatic expansion valves (TEV) in which the temperature is regulated using solenoid valves in the liquid line (LLSV), e.g. Danfoss type EVR.

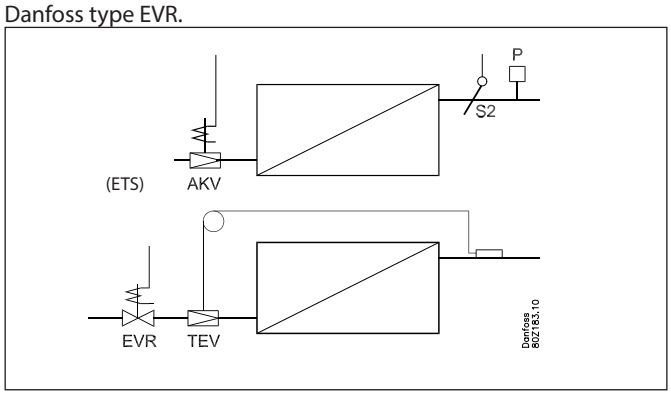

The thermostat function can be defined in different ways depending on which application it is used for. For example:
• regulation principle /
• what sensors are to be used /
• whether the user wishes to toggle between two temperature settings, etc.
It is necessary for at least one air sensor to be fitted for every evaporator section. This is applicable irrespective of which thermostat function is selected – including "**no**" thermostat. The thermostat's cut-out temperature also has to be set to the correct air temperature as this value is used by the injection function.

Thermostat type= ON/OFF

<u>One common valve for all evaporators + common ON/OFF thermostat</u>
A line up of refrigeration appliances which are to be regulated to the same temperature is a typical example.
The temperature is controlled according to the ON/OFF principle in accordance with the thermostat settings in section A.

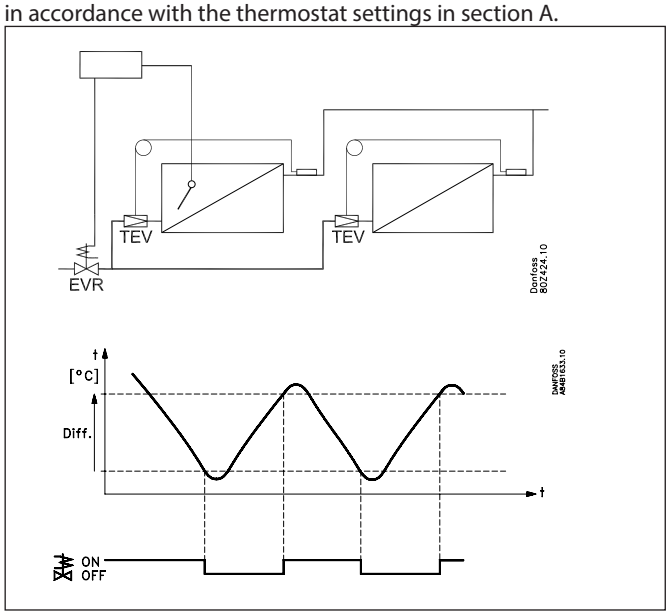

The thermostat can control the temperature via:
• a signal from the S3/S4 sensors in section A, or
• min/max or average temperatures in all the sections used (see the section on sensor selection)

AKV valve
This principle can also be used with electronic expansion valves type AKV; e.g. refrigeration appliances where one valve is used for two evaporators. These appliances are specially designed for this application as the evaporator area is divided over two refrigeration sections in order to achieve a consistent load over the two circuits.

<u>One valve for every evaporator + common ON/OFF thermostat</u>
Here, one valve is used per evaporator and the temperature is controlled according to the ON/OFF principle in accordance with the thermostat settings in section A

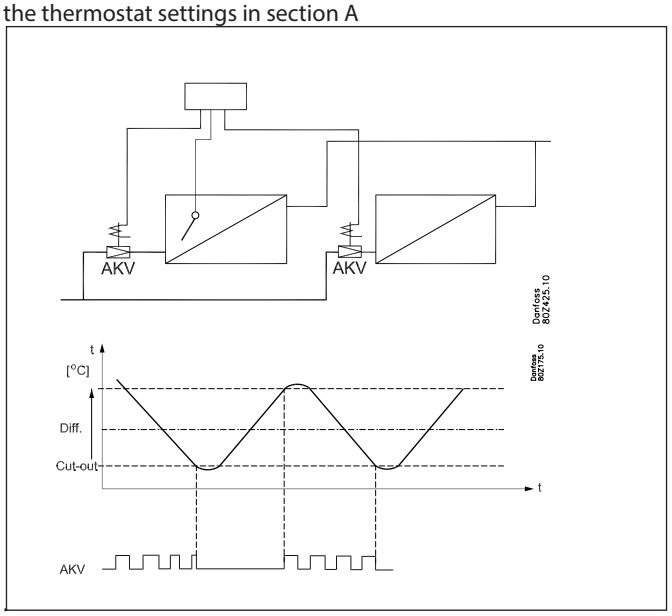

The thermostat can control the temperature via:
• a signal from the S3/S4 sensors in section A, or
• min/max or average temperatures in all the sections used (see the section on sensor selection)

One valve for every evaporator + individual ON/OFF thermostat
Here, one valve is used per evaporator and the temperature is controlled individually in each evaporator section according to the ON/OFF principle.

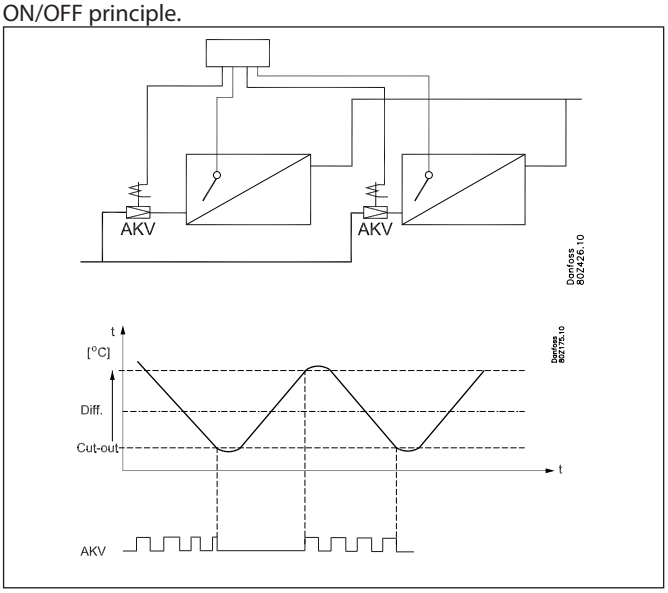

The thermostat in every section controls the temperature via the S3/S4 sensors in every section (where appropriate, see the section on sensor selection).

Thermostat type = Modulating
Modulating temperature regulation maintains a more constant temperature and also equalises the load on the system so that the compressors have better operating conditions.

- This function can only be used on:
  - central systems with AKV valves
  - central systems with solenoid valves
  - brine systems with solenoid valves.
- Each of the individual evaporator sections is controlled individually using a modulating thermostat function.
- Cut-out value and difference **must** be set as with an ON/OFF thermostat.

One AKV valve for each evaporator + modulating thermostat
Here, one valve is used per evaporator and the temperature is controlled individually in each evaporator section according to the modulating thermostat principle.

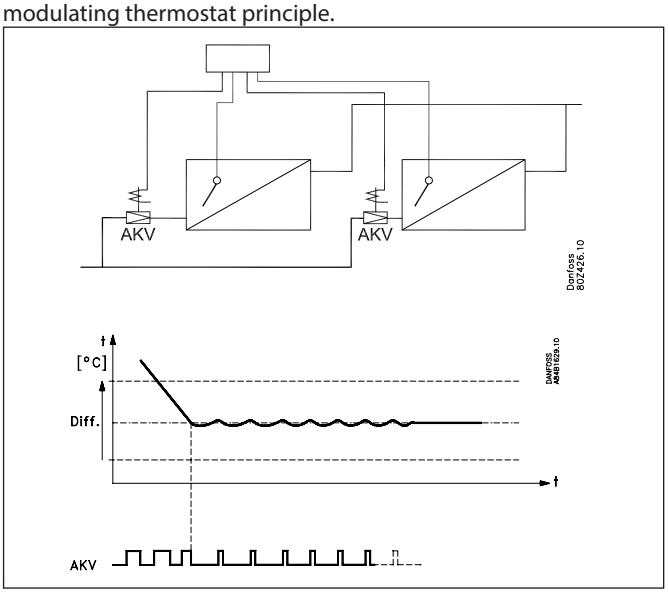

The thermostat in each section controls the temperature via the S3/S4 sensors in each section.

During cooling and in the case of major load variations in which the temperature falls outside of the thermostat limits, injection is regulated so that the evaporator operates with the minimum possible stable superheating. This ensures that the cooling process takes place as quickly as possible.
In the case of stable loads, the thermostat will reduce the opening time for the AKV valve, so the through flow of refrigerant is restricted to precisely the amount that is required to maintain the temperature at the required reference (area control).
The reference temperature will be the set cut-out temperature + half the difference.
The cut-out temperature and difference are set as in the case of a standard On/Off thermostat. The difference should **not** be set to less than 2K. (In the case of a smaller difference, load changes could interfere with the modulating thermostat function.)

One solenoid valve for each evaporator + modulating thermostat
Here, one valve is used per evaporator and the temperature is controlled individually in each evaporator section according to the modulating thermostat principle.

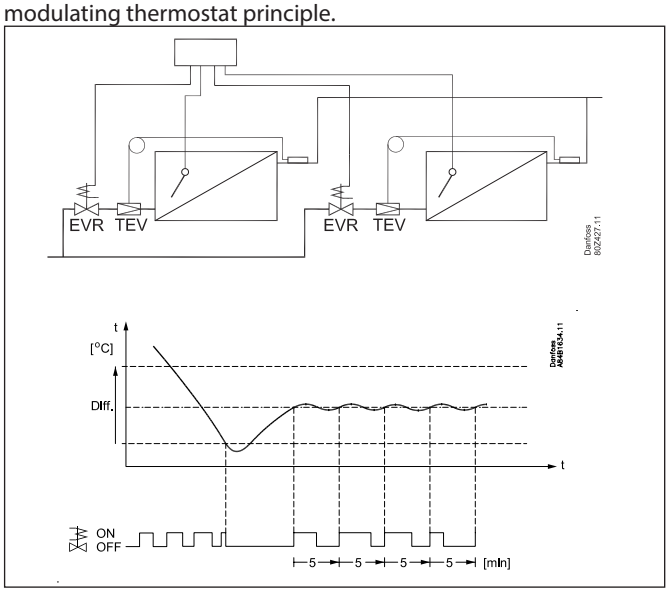

With solenoid valves, a pulse modulating principle is used with an adjustable period. The valve is opened and closed within a period (e.g. 5 minutes). A PI controller calculates how long the valve needs to be open in order to maintain the most constant temperature.
The reference temperature will be the set cut-out temperature + half the difference.
The cut-out temperature and difference are set as in the case of a standard On/Off thermostat. The difference should not be set to less than 2K. (In the case of a smaller difference, load changes could interfere with the modulating thermostat function.)

The current load on the appliance can be read off in the form of the valve's opening time as a percentage of the set period.

Desynchronisation of valve openings
To achieve even loading on the compressors, a desynchronising function has been built in which ensures that the times for solenoid valve opening are displaced.

Within the same controller
If several valves are used on the same controller, the opening times are displaced in relation to one another. For example, if two valves are used, the opening of these is displaced in relation to one another by half a period.

Between controller
Displacement of the opening of the solenoid valves takes place on the basis of the controllers' address settings. If a period time of 300 seconds (factory default) is used, the opening of the solenoid valves for the A section will be displaced by 15 seconds x last digit in the address setting, e.g.:
Addresses 0, 10, 20: are shifted by 0 seconds
Addresses 1, 11, 21: are shifted by 15 seconds, etc.

This desynchronisation between controller takes place during start-up and once a day at around midnight, 00:00

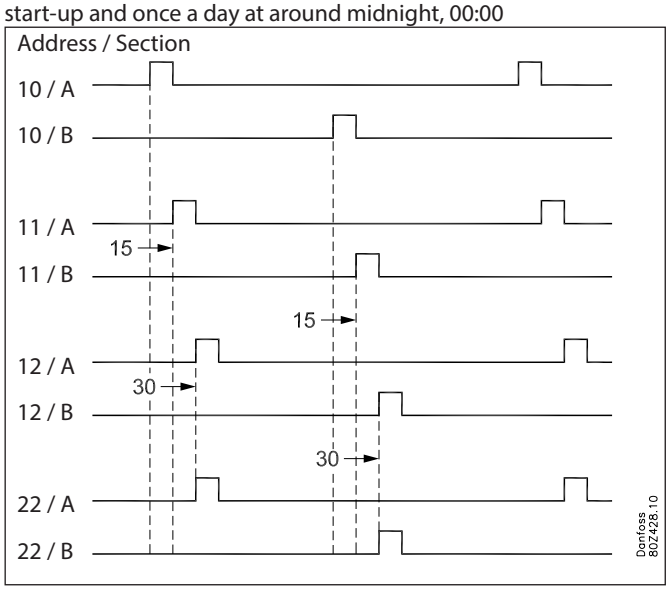

Thermostat sensor

Individual thermostat
When individual thermostat control is used in every section, the temperature is controlled on the basis of the air temperature sensors S3, S4 or both.

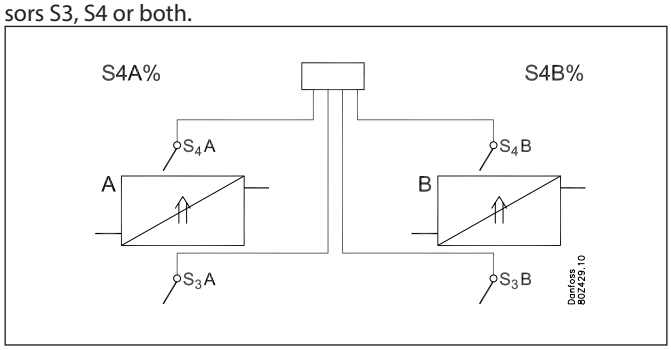

Definition of the thermostat temperature takes place using one setting, which is based on the S4 value. With a setting of 100%, only the S4 measurement will be used. With a setting of 0%, only S3 will be used. With a value between 0 and 100%, both measurements will be used.

If AKV (ETS) valves are used, at least one sensor must **always** be used in every section, irrespective of the choice of thermostat function. This measurement is used by the injection function for the superheat controller.

Common thermostat
When a common thermostat is used, the thermostat settings in section A are used to control the air temperature.

The thermostat temperature can be either a weighting of the S3 and S4 sensors in section A, as described for the individual thermostat. This will typically be used in cold storage rooms and freezer rooms in which several evaporators are controlled according to a common temperature.

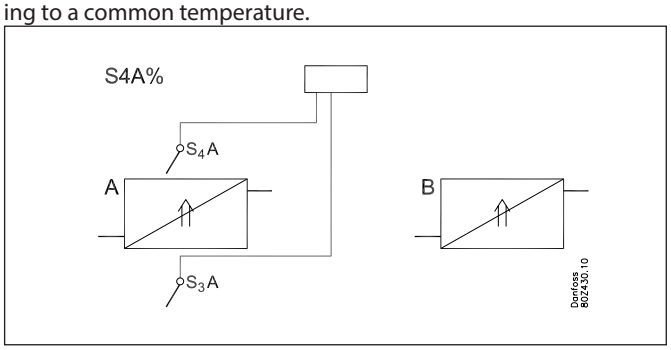

Alternatively, the thermostat temperature can be a minimum value, a maximum value or an average value of all S3 or S4 sensors for the refrigeration sections used. This will typically be used where one solenoid valve is used for several appliance sections and where it is necessary to ensure that the thermostat is taking into account the temperature in all sections.

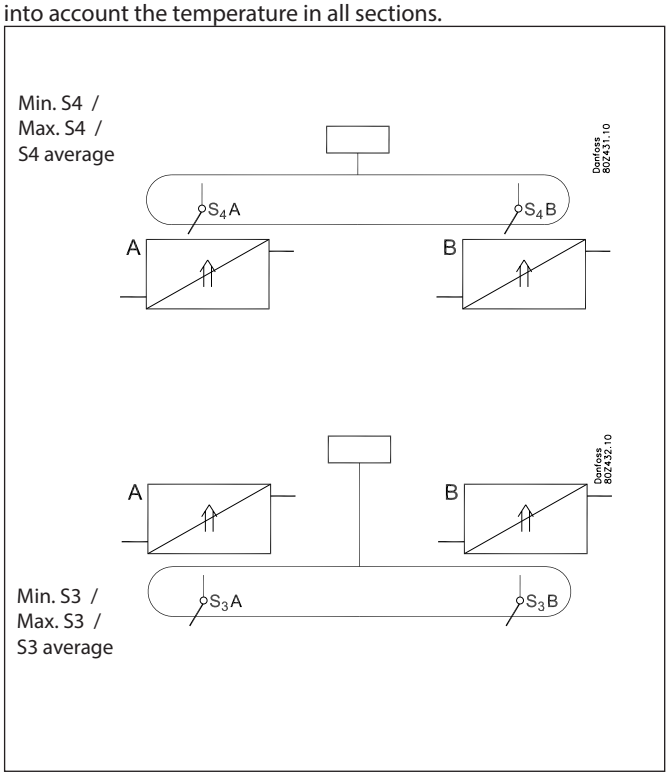

Swithc between two thermostat band (two references)

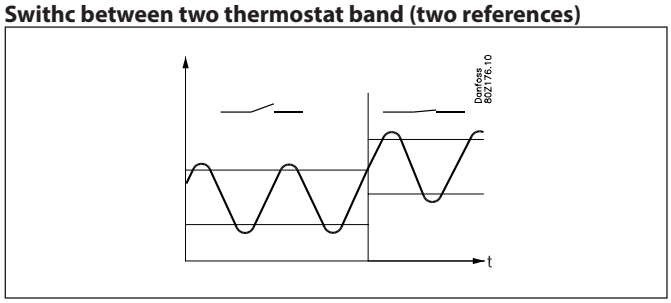

It is a good idea to use this function for refrigeration appliances containing impulse purchases where the products are often exchanged. Via a switch function it is possible to change between two thermostat settings depending on the products contained in the appliance. The change-over between two thermostat bands is activated via a contact or via a pulse signal of at least three seconds' duration – as a rule via a key switch placed on the appliance. When the switch is activated the thermostat settings as well as the limits for the alarm thermostat and the product sensor will change.
The changeover between the two thermostat bands can also be seen on the display, but only if the shift is set to take place with a pulse signal.
When a change-over is activated the display will show to which thermostat band the change goes.

Displacement of reference for thermostat

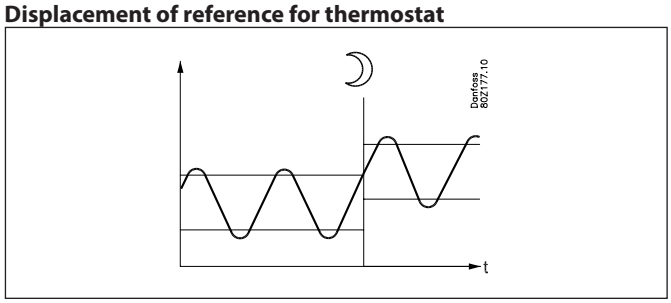

In refrigeration appliances there may be big load differences between the shop's opening and closing hours, especially if Night blinds/curtains are used. The thermostat reference may be raised here without it having any effect on the product temperature.
Change-over between day and night operation can take place, as follows:
• via the built-in weekly schedule
• via an external switch signal
• via a signal from the data communication

When night operation starts the thermostat reference will be displaced with an offset value that normally will be positive. It must however be negative if cold accumulation is to take place.
When a Night blind is used the distribution of air in the appliance will change radically. A change of the thermostat's weighted S3/S4 ratio will therefore be required. As a rule the S4 share is set at a lower value during the night than during the day.

The thermostat reference can be displaced via an external voltage signal which is particularly useful for process cooling.

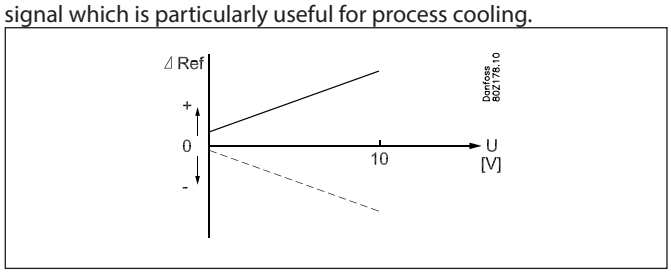

The signal may be a 0-5V, 0-10V, 1-5V or 2-10V voltage signal. Two offset values must be set, one indicating the displacement at minimum signal and another indicating the displacement at maximum signal. The displacement will apply to all sections.
The displacement will not affect the alarm limits.

Melting function
This function will stop the air flow in the evaporator from being reduced by frost created by uninterrupted operation for a long time. The function is activated if the thermostat temperature has remained in the range between -5°C and +10°C for a longer period than the set melting interval. The refrigeration will then be stopped during the set melting period. The frost will be melted so that the air flow and hence the evaporator's capacity will be greatly improved.
The settings for melting interval and melting period are common to all sections, but the controller will displace the melting time for the different sections so that no synchronisation will take place.
If there are several controllers in the same defrost group the time between the two meltings should be set differently in the individual controllers. In this way a synchronisation of the thermostats' cutin times will be avoided.

Timer for compressor relay
If a compressor relay has been selected, the relay's timer function will have higher priority than the thermostat function.

Temperature alarms

Alarm thermostat
The function is used for sounding the alarm before the product temperature at the refrigeration site becomes critical.
You can set alarm limits and time delays for high and low temperatures. Alarm will be given if the set limit is exceeded, but not until the time delay has expired.
There will be no alarms when refrigeration has been stopped due to cleaning of the appliance or if the main switch is set in pos. OFF.
The alarm sensor may be chosen independently of the sensor used for the thermostat function.

Alarm sensor
The alarm sensor may be selected as either S3 or S4, or a weighted value of both of them.
The setting is performed as a percentage value of S4.
The weighting need not be the same as for the thermostat function. In other words, the thermostat may regulate according to S4 and the alarm thermostat may give alarm according to S3.

Alarm limits
Different alarm limits can be set for the individual sections. The alarm limits are set as absolute values in °C.
If thermostat bands are used, separate limits can be set for each thermostat band. The alarm limits are not affected if there is an external reference displacement via a voltage signal.
During night operation the value for upper limit will raise with the same value as night operation is raised with (a negative night setback will not change the limit value).

Time delay
Three time delays are set for alarms:
- For too low temperature
- For too high temperature during normal regulation
- For too high temperature during cooling down
  - after activation of internal or external start/stop
  - during a defrost
  - after a power failure
  - after appliance cleaning.

The time delay will apply until the actual air temperature has dropped below the "upper alarm limit"..

Example

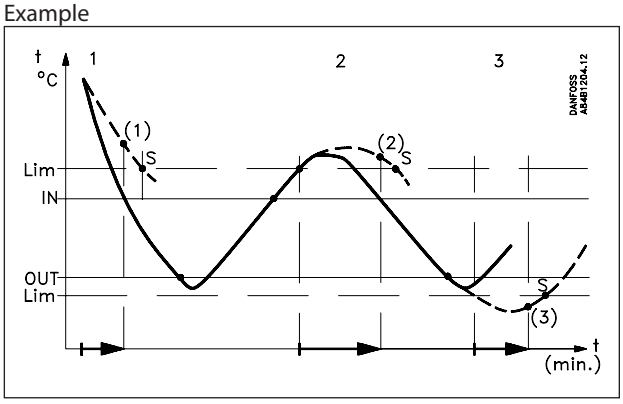

N:	Thermostat cut-in value
OUT:	Thermostat cut-out value
Lim:	Alarm limit for high temperature and low temperature
S:	Alarm ceases

Curve 1:	Cooling stage (1): Time delay has been exceeded. . Alarm be comes active.
Curve 2:	Normal regulation where the temperature becomes too high (2): Time delay has been exceeded. . Alarm be comes active.
Curve 3:	Temperature becomes too low (3): Time delay has been exceeded. . Alarm be comes active.

If regulation is carried out with two thermostat bands there will be a set of alarm limits for each band. Time delays will be common to the two bands.

Product sensor with alarm function
An extra temperature sensor may be connected to each section. The sensor will function independently of the other functions.

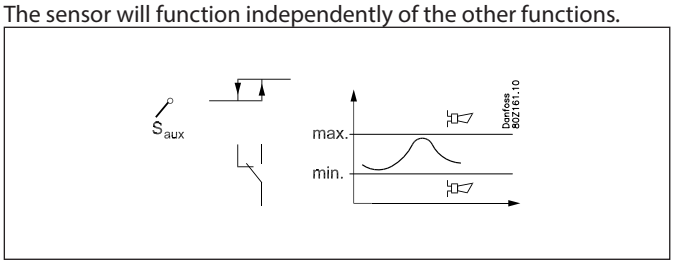

Alarm limits and time delays can be set, as for the alarm thermostat.

Frost alarm
If the thermostat is controlled according to the S3 temperature or a weighting of S3/S4, there could be a risk (on the refrigeration shelves) that the evaporator's S4 discharge temperature may become so cold that the products at the back of the shelves become exposed to unintended frost temperatures.
To prevent this, the controller has a built-in frost alarm. If the S4 temperature falls below a set frost limit an alarm will be given so that the cause of the cold outlet temperature can be found and corrected.

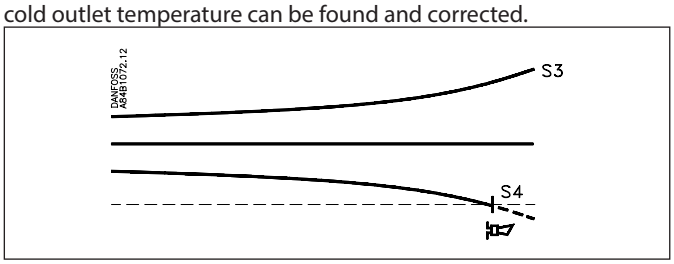

Common functions

Fan control
To obtain energy savings it is possible to reduce the power supply to the fans at the evaporators. The reduction can be done:
- during the thermostat's cutout period (cold room)
- during night operation and during the thermostat's cutout period (appliance with Night blind)

It can be controlled by one of the following 4 fan types:

Single speed fan
One relay is used here to control the fans. This relay can be pulse controlled, but only when all sections/evaporators are cut out

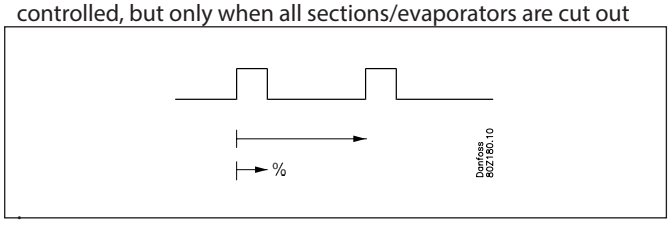

A period of time is set as well as the percentage of this period of time where the fans have to be operating.

2-speed fans
Two relays are used here to control the fans. One relay will provide full speed for the fans, and when the second relay triggers, the speed of the fan motors is reduced. The relay for reduced speed will be referred to as 'eco' in the setup of outputs.

Fan with EC motor
Here the controller must use an analogue output module that can deliver the desired voltage to the EC motor. 0 - 10 V, 2 - 10 V, 0 - 5 V or 1 - 5 V.
The desired fan speed is given as a percentage of the output signal i.e. 0 - 100 %. For example, 90 % during normal daytime operation and 70 % during eco operation.
Different values can be set for the four operating modes: Normal day, Normal night, Day with thermostat disconnected, Night with disconnected thermostat.
A minimum start speed can be set. This setting will only apply for 10 seconds after the start.

Fans that are controlled by a frequency converter (VSD)
The controller must use an analog output module for these with a starting relay for on/off control of the converter.
The settings are the same as for EC motors

Stop of fans if cooling is missing
If the refrigeration in a breakdown situation stops, the temperature in the cold room may rise quickly as a result of the power supply from large fans. In order to prevent this situation the controller can stop the fans if the temperature at S5 exceeds a set limit value.
The function can also be used as a sort of MOP function during start-up with a hot evaporator. The fans will not start until the S5 temperature has been reached below the set limit value. In other words, the evaporator and hence the compressor wll not be so heavily loaded during the startup phase.
The function uses the S5 sensor from section A.
The function is not active when refrigeration has stopped.

Rail heat control
It is possible to pulse-control the power to the rail heat in order to save energy. Pulse control can either be controlled according to day/night load or dew point.

Pulse control according to day and night
Various ON periods can be set for day and night operation.

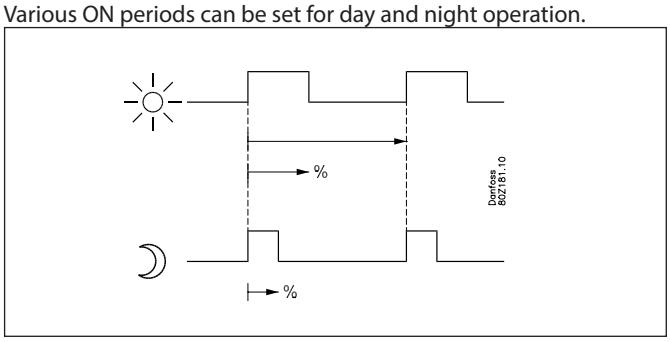

A period time is set as well as the percentage part of the period in which the rail heat is ON.

Pulse control according to dew point
In order to use this function a system manager of the type AK-SM 720, 850, AK-SC 255 or 355 is required which can measure dew point and distribute the current dew point to the appliance controllers. For this the rail heat's ON period is controlled from the current dew point.

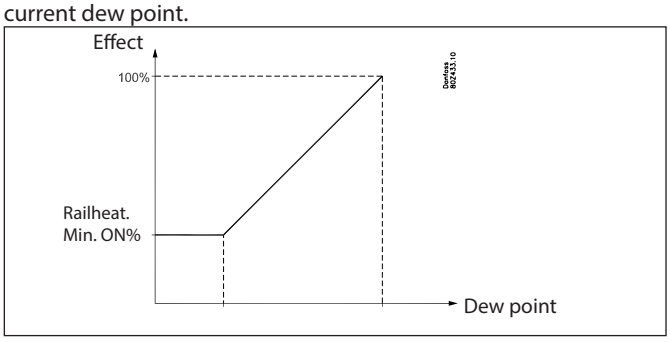

Two dew point values are set in the appliance control:
• One where the effect must be max. i.e.100%.
• One where the effect must be min.
At a dew point which is equal to or lower than the value, the effect will be the value indicated in "Rail heat min ON%".
In the area between the two dew point values the controller will manage the power to be supplied to the rail heat.

The current dew point and duty cycle for rail heat can be read off as status values.
If the dew point signal cannot be distributed to a controller, the rail heat will revert to day/night control.

During defrost the rail heat will always be 100% ON.
If rail heat ON is selected, it will run at 100% during defrost + the time after defrost if the thermostat temperature is above the cut-in limit (but max. 15 minutes).

Compressor control
The controller has a function that can be used for compressor control. When the function is selected ON a relay will automatically follow the status of the thermostat functions. The relay is ON when the thermostat demands refrigeration. If the thermostat function is selected OFF the compressor output will constantly be ON.
A minimum ON time and a minimum restart time for the relay belong to the function.
The relay will be OFF during defrost.
There is display of:
- operating hours during the past 24 hours
- total number of operating hours
- number of couplings during the past 24 hours
- total number of couplings

Appliance cleaning
This function makes it easy for the shop's staff to carry out a cleaning of the appliance according to a standard procedure.

Function
Appliance cleaning is activated via a pulse signal of minimum three seconds' duration – as a rule via a key switch placed on the appliance. It can however also be activated via data communication. Appliance cleaning is carried out via three phases:
1 - at the first activation the refrigeration is stopped, but the fans keep on operating in order to defrost the evaporators. "Fan" is shown on the display.
2 - at the second activation the fans are also stopped and the appliance can now be cleaned. "OFF" is shown on the display.
3 - At the third activation refrigeration is recommenced. The display will show the actual appliance temperature.

To carry out cleaning of a frost appliance as quickly as possible cleaning can be started with a defrost sequence.

When appliance cleaning is activated a cleaning alarm is transmitted to the normal alarm recipient. A later processing of these alarms will document that the appliance has been cleaned as often as planned. The function saves information on when the last appliance cleaning was carried out and how long it lasted.

Appliance shutdown
This function makes it possible to shut down a refrigeration appliance using data communication or a switch signal.
When the signal is received, refrigeration and alarm monitoring stops.
Fans and lights will do the following depending on the setup:
• Fans continue. The light will follow the standard setup.
• Fans stop immediately. The light immediately switches off.
• Fans stop when the delay time expires. The light will follow the standard light control.
• Fans stop when the delay time expires. The light switches off when the delay time expires.
The shutdown delay time is adjustable and applies to both fans and lights.
Any night curtain output will follow the light function.

Door contact
The door contact function can be defined for two different applications:
- *Door alarm*
  The controller monitors the door contact and delivers an alarm message if the door has been opened for a longer period than the set alarm delay.
- *Stop of refrigeration + door alarm*
  When the door is opened the refrigeration is stopped, i.e. the injection and the fan are stopped. If the door remains open for a longer time than the set restart time, refrigeration will be resumed. This will ensure that refrigeration is maintained even if the door is left open or the door contact should be defective. If the door remains open for a longer period than the set alarm delay an alarm will also be sounded.

In both applications the alarm function will also contain a local reminder which is activated when 75% of the set time has been passed. This reminder only appears on the connected display and the intention of it is that the door must be closed before the alarm for open door is released.

From the controller the following can be read:
- the duration of the last open period
- the total open period during the past 24 hour
- number of openings during the past 24 hours

Defrost has higher priority than the door function. That is to say, refrigeration and fans will not be started until defrost is complete.

The door contact function can also activate the light function so that the light is turned on and kept on for a period of time after the door has again been closed. Cf. the section on light function.

Light function
The function can be used for controlling the light in a refrigeration appliance or in a cold room. It can also be used for controlling a motorised night curtain.

The light function can be defined in three ways:
- the light is controlled via a signal from a door contact. Together with this function a time delay can be set so that the light is kept burning for a period of time after the door has been closed.
- the light is controlled via the day/night function
- the light is controlled via the data communication from a system unit.

It is possible to set whether the light is to be switched on or off when the main controller switch is activated.
This is set in the function "Light at main switch=off".
If "Light at main switch=off" is set to ON, the normal light function will be maintained when the main switch is switched off.
If OFF is selected for this setting, the light will stay off when the main switch is switched off.

Night blind
Motorised night blind can be controlled automatically from the controller. The night blinds will follow the status of the light function. When the light is switched on, the night blinds opens and when the light is switched off, the night blinds close again.
When the night blinds are closed, it is possible to open them using a switch signal on the digital input. If this input is activated, the night blinds will open and the refrigeration appliance can be filled with new products. If the input is activated again, the blinds close again.
When the night blind function is used, the thermostat function can control with different weighting between the S3 and S4 sensors. A weighting during day operation and another when the blind is closed.

A night blind is open when the appliance cleaning function is activated.
To ensure the correct position of the night blind the fans can be switched off in the period during which the night blinds roll down.

Forced closing
The AKV (ETS) valves can be closed with an external signal (the "Inject ON signal"). The function must be used in connection with the compressor's safety circuit, so that there will be no injection of liquid into the evaporator when the compressor is stopped by the safety controls. (However not at low pressure – LP).

The signal can also be received from the DI-input or be received via the data communication.

During a forced closing the fans can be defined to be stopped or in operation.
Defrosting can also be permitted or omitted during this period.
If defrosting has been requested within 10 minutes of the end of forced closing, defrosting will restart the moment forced closing ends.

Alarm relay
If the controller is to give alarm at a relay output, the relay must be defined.
A setting determines when the relay is activated:
- Only for alarms with "high" priority
- For alarms with "low" and "medium" priority
- For alarms with "low", "medium" and "high" priority.

Start/stop of regulation (main switch)
A software setting is used for starting and stopping the regulating function.
ON = normal regulating function
OFF = Regulation stopped. All outputs will be set in standby mode. All alarms are stopped. An alarm can however be transmitted to the effect that regulation has stopped.
The function applies to all sections.

You can also define an external switch for start/stop of the regulation.
If an external switch is defined regulation will only be carried out when both switches are in position "ON".

General monitoring functions

General alarm inputs (10 units)
An input can be used for monitoring an external signal.

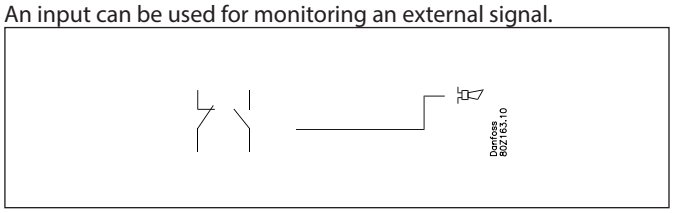

The individual signal can be adapted to the relevant use as it is possible to give the alarm function a name and to indicate your own alarm text.
A time delay can be set for the alarm.

General thermostat functions (5 units)
The function may freely be used for alarm monitoring of the plant temperatures or for ON/OFF thermostat control. An example could be thermostat control of the fan in the compressor compartment.

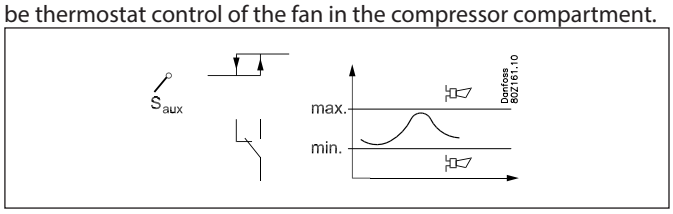

The thermostat can either use one of the sensors used by the regulation (Ss, Sd, Sc3) or an independent sensor (Saux1, Saux2, Saux3, Saux4).
Cutin and cutout limits are set for the thermostat. Coupling of the thermostat's output will be based on the actual sensor temperature. Alarm limits can be set for low and high temperature, respectively, including separate alarm delays.
The individual thermostat function can be adapted to the relevant application as it is possible to give the thermostat a name and to indicate alarm texts.

General pressure control functions (5 units)
The function may freely be used for alarm monitoring of plant pressure or for ON/OFF pressure control regulation.

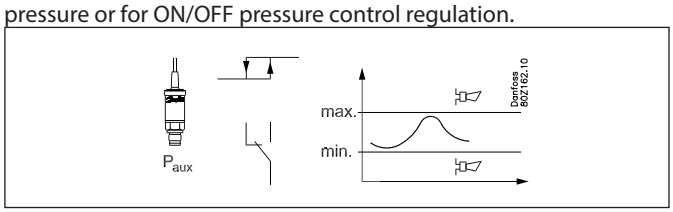

The pressure control can either use one of the sensors used by the control function (Po, Pc) or an independent sensor (Paux1, Paux2, Paux3).
Cutin and cutout limits are set for the pressure control. Coupling of the pressure control's output will be based on the actual pressure. Alarm limits can be set for low and high pressure, respectively, including separate alarm delays.
The individual pressure control function can be adapted to the relevant application as it is possible to give the pressure control a name and indicate alarm texts.

General voltage input with ancillary relay (5 units)
5 general voltage inputs are accessible for monitoring of various voltage measurements of the installation. Examples are monitoring of a leak detector, moisture measurement and level signal - all with ancillary alarm functions. The voltage inputs can be used to monitor standard voltage signals (0-5V, 1-5V, 2-10V or 0-10V). If required, one can also use 0-20mA or 4-20mA if external resistance is placed at the inlet to adjust the signal to the voltage. A relay outlet can be attached to the monitoring so that one can control external units.

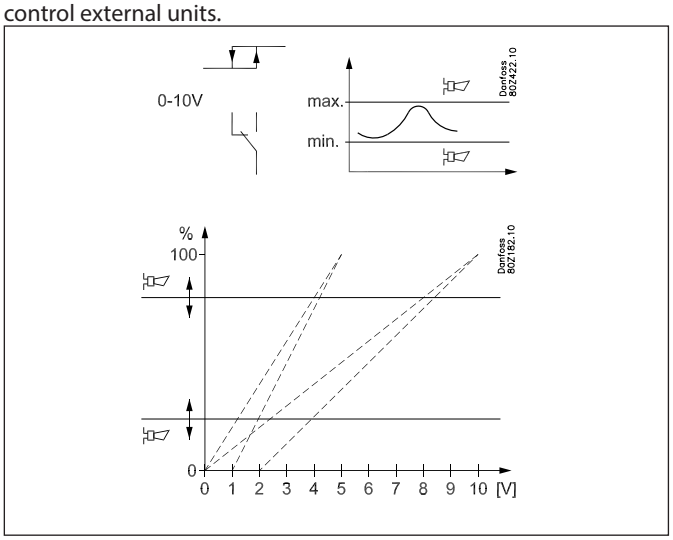

For each inlet, the following can be set/read out:
- Freely definable name
- Selection of signal type (0-5V, 1-5V, 2-10V, or 0-10V)
- Scaling of read-out so it corresponds to measuring unit
- High and low alarm limit including delay times
- Freely definable alarm text
- Attach a relay output with cut in and cut-out limits including delay times

Liquid injection

Principle
Up to four valves can be connected. One for each solid state output.
Control can be carried out with electrically operated expansion valves type AKV or ETS.
Or injection can take place with thermostatic expansion valves (TEV) where the temperature will then be regulated with solenoid valves type EVR or similar.

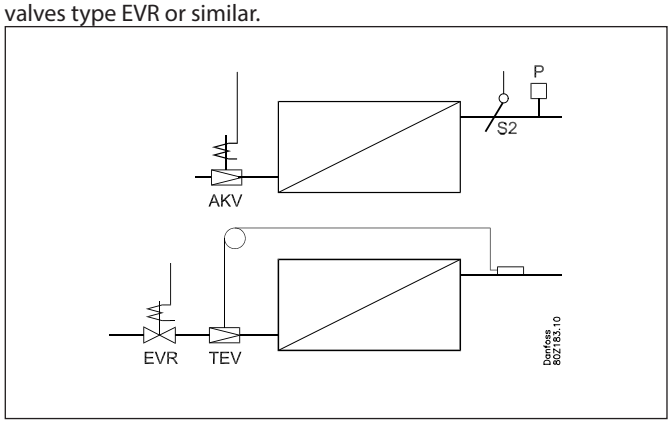

Adaptive superheat with AKV (ETS) valve
The evaporating temperature is measured with pressure transmitter P and the superheat with the pressure transmitter and the S2 sensor.

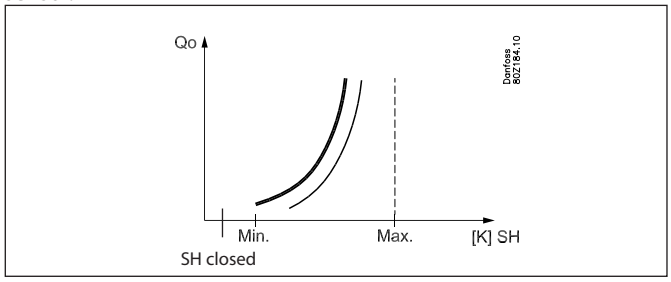

The function contains an adaptive algorithm that independently adjusts the valve's opening degree, so that the evaporator constantly delivers optimum refrigeration at lowest possible superheat.
The superheat reference will be limited by the settings for min. and max. superheat.

If the superheat is very low, the valve may be closed very quickly using the "SH closed" setting.
When the superheat has dropped to 1 K over the "SH closed" limit, this function will reduce the degree of opening of the valve so that the valve will with certainty remain closed if the superheat fall to the "SH closed" value. To ensure that the close function does not generate the general superheat regulation, the "SH closed" setting must be at least 1K lower than "SH min".

One pressure transmitter can supply signals to several controllers if they regulate refrigeration points on the same suction line. But if a valve is mounted in an evaporator's suction line, say, a KVP / KVQ or PM, the pressure transmitter must be placed before the valve. The signal can now only be used by the relevant controller.

Refrigerant
Before regulation can be commenced, the refrigerant must be defined.
You can directly select one of the current refrigerants:

1 R12	12 R142b	23 R410A	34 R427A
2 R22	13 User defined	24 R170	35 R438A
3 R134a	14 R32	25 R290	36 R513A
4 R502	15 R227	26 R600	37 R407F
5 R717	16 R401A	27 R600a	38 R1234ze
6 R13	17 R507	28 R744	39 R1234yf
7 R13b1	18 R402A	29 R1270	40 R448A
8 R23	19 R404A	30 R417A	41 R449A
9 R500	20 R407C	31 R422A	42 R452A
10 R503	21 R407A	32 R413A	
11 R114	22 R407B	33 R422D	

If a new refrigerant is demanded which is not as yet contained on the list you may select "User-defined" which is subsequently set with data for the refrigerant in question. The values can be ordered from Danfoss.

Warning: Incorrect selection of refrigerant can cause damage to the compressor.

MOP control
(MOP = Max. Operating Pressure)
The MOP function limits the valve's degree of opening as long as the evaporating temperature measured by S1 is higher than the set MOP temperature. The function can only be active when the AKV injection valve function is ON.

Start/stop of injection
The injection can be stopped separately for each evaporator section.

Defrost

There is a common defrost start for all evaporator sections. Defrost stop can be common or individual when based on temperature. Refrigeration will not be re-started until defrost has been accomplished in all sections.

Fan control during defrost
Choose whether the fans should be running or stopped during the defrost sequence.

Coordinated defrost
If there are several controllers that are to perform defrost at the same time they can be grouped from the system unit. The system unit will start the defrosts, and when the defrost of the individual controllers is later finished they will go into "stand-by" position until all the defrosts have been terminated. Refrigeration is then resumed.

Drip tray heating element
It is possible to control a heating element in the drip tray for hot gas defrost. When defrost is commenced, the heating element is activated. The heating element remains activated until a set time after defrost has ended by time or temperature.

Defrost type

Electric defrost

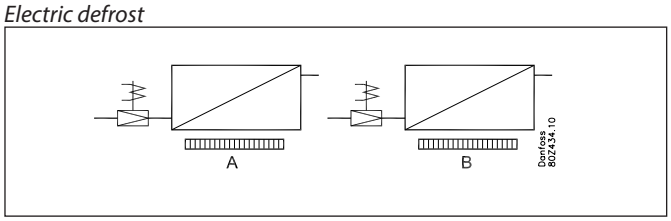

When there is electric defrost, the individual sections' heating elements are controlled separately.

Natural defrost

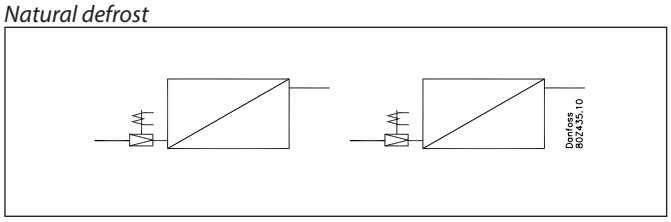

Defrost is accomplished here by the fans circulating air through the evaporator.

Warm brine defrost

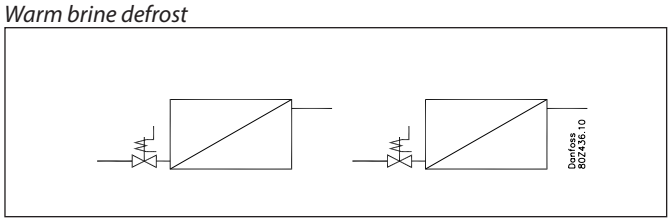

Warm brine defrost can be used on indirect refrigeration systems with solenoid valves. During warm brine defrost, the solenoid valve is kept open during defrost so that the warm brine can run through the "evaporator".

Hot gas defrost

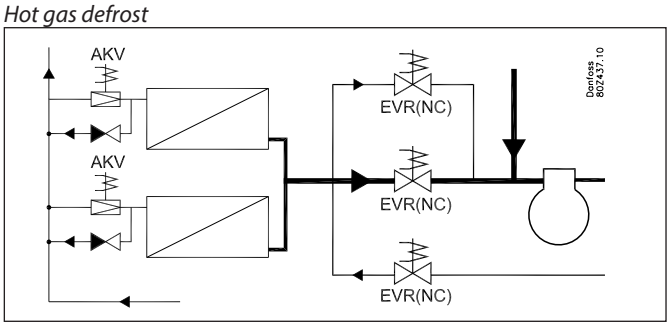

During hot gas defrost, the controller regulates valves in the liquid line, hot gas valves, a suction line valve and a drain valve.
A time delay can be set which defers opening of the hot gas valve.

Defrost start
Defrost can be started in several ways. Once started it will continue until a "defrost stop" signal is received.

- Manual defrost
  Manual defrost can be enabled via a setting in the controller or via the bottom button on the display.
  After activation the setting moves back to position OFF when the defrost has been completed.

- External signal on input
  Defrost start is done with a signal on a DI input. The signal must be an impulse signal of at least three seconds' duration. Defrost starts when the signal moves from OFF to ON.

- Schedule – weekly programme
Defrost can be started via an internal schedule or via an external schedule placed in the network's system unit.
  - Internal schedule
    Defrost is started by means of a weekly programme that is set in the controller. The times have relation to the controller's clock function. Up to eight defrosts per 24 hours can be set. The schedule can be found via the "Overview display" / "Defrost" / "Schedule".
  - External schedule
    Defrost is started via a signal from the network's system unit (e.g. AKA 245, AK-SM 350 or AK-SM 720)

- Interval
  Defrost starts with set intervals, e.g. every eight hours. An interval must ALWAYS be set to a "higher" value than the period set between two defrosts when a schedule or network signal is used. Defrost according to intervals ensures that defrost always takes place, even if no signal is received from the network's system unit.

- Adaptive defrost
  This function can cancel planned defrosts which are not necessary, and on its own initiative it can start a defrost if the evaporator is about to be blocked by rime and ice.
  (The "Adaptive defrost" function is described at the end of the section.)

Defrost sequence
Every defrost runs through the following sequence:
- emptying of evaporator (pump down) (state 1)
- defrost is initiated (state 3)
- waiting position (used for coordinated defrost) (state 4)
- drip-off (injection delay) (state 5)
- Pressure equalisation where the drain valve opens (hot gas defrost only) (state 6)
- fan delay (state 7)

Emptying of evaporator (state 1)
Before the defrost heating elements are started it is possible to carry out emptying of the evaporator. During a set time delay, the valve in the liquid line remains closed, the fans run and the evaporator is drained of refrigerant.

Defrost (state 3)
• Electric defrost
The electric heating elements are activated here.
• Natural defrost
Here, the fans run in order to defrost the evaporator using air circulation alone.
• Hot gas defrost
Here, the drain valve and suction line valve are closed. The hot gas valve opens in order to feed hot gas through the evaporator.
• Warm brine defrost
Here, the solenoid valve is held open so that warm brine can be fed through the evaporator.

Defrost stop
There are four kinds of defrost stop to choose from.

• Individual stop using temperature and with time as security
In the case of electric and hot gas defrost, one output per evaporator is used here, i.e. an individual heating element / hot gas valve per evaporator.

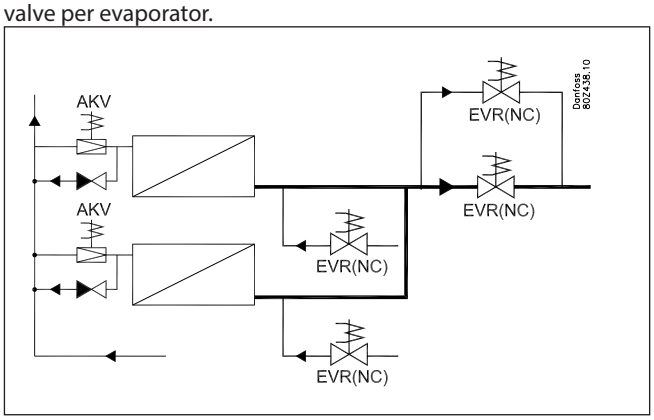

Example of hot gas usage with individual stop per evaporator

The temperatures of each evaporator are measured using a sensor. When this temperature is then equal to or greater than the set temperature for defrost stop, defrost stops in the section in question. The defrost sequence continues only when all sections have completed defrost.
When there is electric defrost, S5 is normally selected as defrost sensor, but S3, S4 or S2 may also be selected (S3 is an air sensor placed in the evaporator inlet, and S4 is an air sensor placed in the evaporator outlet).

For large evaporators there should be two S5 sensors – S5-1 and S5-2. The defrost is stopped when both temperatures have attained the set value.

If the defrost time exceeds the set max. defrost time, the defrost stops. This will happen even if the defrost stop temperature has not been reached (max. defrost time will function as safeguard). When the defrost is stopped on time, the alarm message "Max. def. period exceeded" will appear for the section in question. If the alarm is not acknowledged within five minutes, it will automatically be cancelled.

When there is an error in a defrost sensor, an alarm appears and the defrost stop will then be based on time in the relevant section. Defrost stop for the remaining sections will still be based on temperature.

• Common stop using temperature and with time as security
In the case of electric and hot gas defrost, only one output is used for all evaporators, i.e. one output for heating element / common hot gas valve.

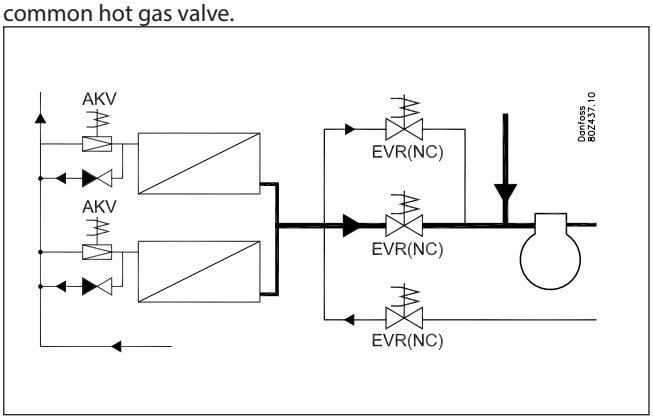

Example of hot gas usage with common hot gas valve for all evaporators

The temperatures of each evaporator are measured using a sensor. Once all the evaporator temperatures are equal to or greater than the set temperature for defrost stop, defrosting is stopped in all sections and the defrost sequence continues.

The selection of defrost stop sensor as well as the "safeguard" stop on time if stop temperature can not reached is exactly as described for individual stop.

• *Stop based on time*
A fixed defrost time is set here. When this time has elapsed, the defrost will be stopped and cooling will be resumed. (When stop on time the controllers does not check whether one or more of the evaporators still require defrost.

• Minimum defrost time
A time can be set which must pass before defrosting can be concluded. This time setting has higher priority than Max. defrost time.

• Manual stop
Defrost in progress can be stopped manually by enabling the "Stop defrosting" function."

If a signal on forced closing during a defrost is received, the selected setting determines whether defrosting is to be stopped.

Coordinated defrost (state 4)
Via a system unit it is possible to perform a group defrost with other appliance controllers. The system unit will in that case start a defrost with a start signal via the data communication. When the first section of a controller has finished defrost, the controller starts the "Max. hold time" function and when all sections have finished defrost, this is recorded by the system unit. The controller will then move into waiting position until it receives a signal to restart refrigeration. This happens when all controllers in the group have concluded their defrosts. If this message has not been received within the "Max. holding time" time, the controller will resume refrigeration under all circumstances.

Drip-off delay (state 5)
A time delay can be put in so that any drops of water may drip off the evaporator before refrigeration is resumed. In this way it is ensured that the evaporator as far as possible is free from water when refrigeration is restarted.

Drain delay / pressure equalisation during hot gas defrost (state 6)
When the drip delay is completed, it is possible to add a drain delay in which the smaller drain valve opens up to the suction line so that pressure equalisation takes place. Once the drain delay has expired, the main valve in the suction line opens and cooling is resumed.

Delayed fan start (state 7)
Regardless of whether the fans are running or have stopped during the defrost sequence, the fans can be stopped during this delay.
Drops of water left on an evaporator after defrost should be bound to the evaporator (primarily used in freezing rooms).
After defrost, the liquid injection is started, the evaporator is cooled down, but the fans will be started a little later. During this period the controllers operate the expansion valve by force, but they constantly monitor the superheat.
The temperature at which the fans are to be started is set (measured always with the S5 sensors). The max. permissible time delay in minutes is set.
The time delay for fan start will not commence until the time delay for liquid injection, if applicable, has run out.
Only when all the S5 sensors register a lower temperature than the set will the fans be started. If all S5 sensors do not register a lower temperature than the set by the delay time has elapsed, the fans will start. At the same time alarm is given that Maximum delay time for fan is exceeded for the section in question. If the alarm is not acknowledged within five minutes, it will automatically be cancelled.
If some of the S5 sensors are defective, the signal from sensors that remain intact will be used.

Example
Below is an example of a defrost sequence using hot gas defrost.

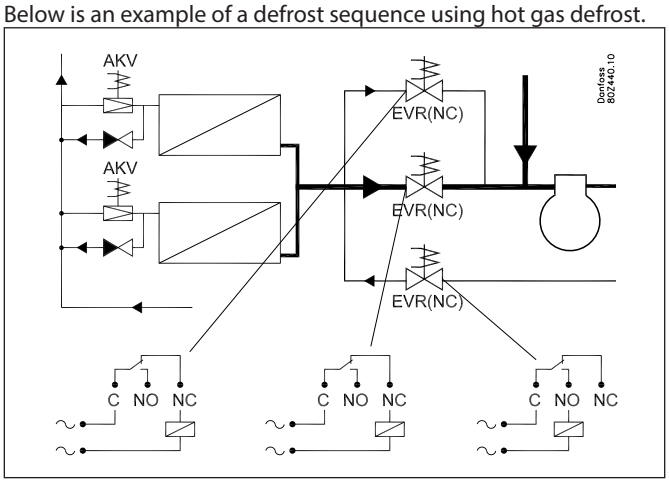

The following are used in the example:
- Hot gas defrost with common hot gas valves
- Defrost using the evaporators is stopped individually using the S5 temperature
- The fans are stopped during defrost

The defrost sequence will be as follows:

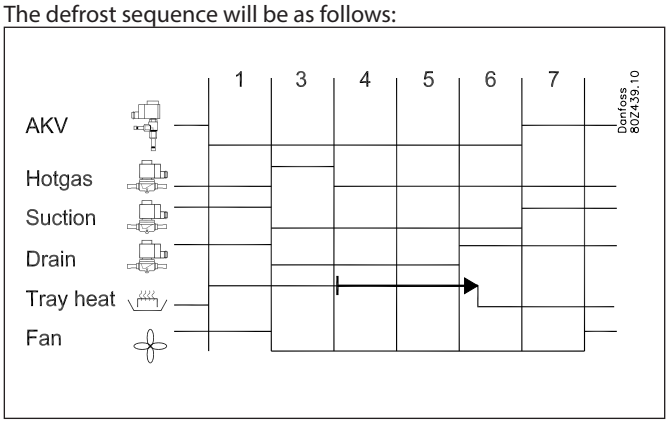

- Pump down (state 1)
  The AKV (ETS) valve closes, the heating element in the drip tray is activated and the fans run.
- Defrost (state 3)
  The fans stop, the main valve and the drain valve in the suction line are closed and the hot gas valve opens.
  Defrost is terminated when the S5 sensor has reached its stop temperature.
- Hold (state 4)
  If coordinated defrost is being used, the controller will wait for a release signal from the network's system unit before continuing with the sequence. Alternatively, the hold stops once the maximum hold time has expired.
- Drip delay (state 5)
  Cooling is delayed so that any drops of water can run off the evaporator.
- Drain delay / pressure equalisation (state 6)
  The drain valve opens so that pressure equalisation takes place in the evaporator.
- Fan delay (state 7)
  The main valve in the suction line opens and liquid injection is resumed. The fans are delayed so that the remaining drops of water are bound to the evaporator. The fans start when the required fan start temperature has been reached on the S5 sensor, or when the set delay time has expired.

• Drip tray heating element
The drip tray heating element is switched off when the set delay time has expired. This delay time is applicable from the end of defrost (state 3).

Adaptive defrost
This function can cancel planned defrosts which are not necessary, and on its own initiative it can start a defrost if the evaporator is about to be blocked by rime and ice.
This function is based on a registration of the air flow through the evaporator. By using the AKV (ETS) valve as mass flowmeter for the refrigerant flow it is possible to compare the energy admission on the refrigerant side with the energy emission on the air side. Via this comparison the air flow through the evaporator can be determined and hence also the amount of ice/frost build-up on the evaporator surface.

Automatic adaptation to the evaporator
When adaptive defrost is activated it will carry out an automatic tuning in order to adapt itself to the relevant evaporator. The first tuning takes place after the first defrost so that tuning can be carried out on an evaporator without ice/rime formation. New tuning subsequently takes place after each defrost (but not at night with night blinds). In a few cases it may happen that the function is not correctly adapted to the relevant evaporator. This is usually because the automatic adjustment has been made under abnormal operating conditions at start-up/on testing the system. This will result in the function reporting an error state. If this happens, a manual reset of the function should take place while briefly setting the function switch to "OFF".

Status display
For each evaporator it is possible to display the current operating status for adaptive defrost:
0: OFF Function not activated
1: Error Reset to be carried out
2: Tuning Function carries out automatic tuning
3: OK - no ice build-up
4: Slight ice build-up
5: Medium ice build-up
6: Heavy ice build-up

Restrictions and sensor signals:

The following connections/signals must be used:
- Expansion valve type AKV (ETS)
- Temperature signal from both S3 and S4
  It is essential that the S3 and S4 sensors are located in the air flows of the evaporator inlet and evaporator outlet. The sensors must be mounted in such a way that the effects of external heat sources, such as fan motors, are minimised as far as possible.
- Pressure signal from condensation pressure Pc
  The Pc signal can be received from a pressure transmitter which is connected to the controller, or it may be received via data communications from the system unit, e.g. AK-SM 720.
  (Several controllers may share the same Pc signal.)
  If the controller does not receive a Pc signal, it will use a constant value for the condensation pressure.
- Adaptive defrosting cannot be used if one of the following refrigerants are used for regulation: R23, R513B, R13B1 or user-defined.

This function can only cancel planned defrosts which start from a defrost schedule – either an internal schedule or an external schedule in the system unit. Other defrost start signals will always result in defrost.
This function will only cancel defrost if all evaporator sections so permit.

Function selection
This function can be set to operate in one of the following ways:
0. OFF:
   The function is stopped. Any alarms are removed and the function is reset.
1. Monitoring only::
   The function is used exclusively to monitor the formation of ice on the evaporator – the function will not cancel planned defrosts.
   If the function detects severe ice/rime formation on an evaporator, an alarm "Appliance A – air flow reduced" is transmitted. The alarm is removed at the start of the next defrost.
2. Skipping of defrosts by day (appliances with night blinds)
   This setting is used if function is only to cancel unnecessary defrosts by day, and if night blind is used for the appliance.
   This function undertakes new tuning only when defrost takes place during day operation.
   The controller MUST be set to night state when night time cover is set for the appliance – this may take place via a schedule in the controller or alternatively via a signal from the system unit. This is because there is a risk of the function detecting the formation of rime/ice on the evaporator when night blind is set for the appliance. (A greater reduction in air flow may occur as a consequence of a small distance between night blinds and products.
   It is important for night time cover to be removed from the appliance when the controller switches to day operation. If not, there is a risk of incorrect tuning, and hence missing data for cancelling defrosts. Correct tuning will take place only after the next defrost.
3. Skip defrost day and night (refrigeration rooms and appliances without night blind)
   This setting is used if the function is to cancel defrosts for rooms and appliances without night blind.
   New tuning of the function takes place after each defrost.
4. Full adaptive defrost
   This setting is used if the function is to start defrosts on its own initiative. The setting can ideally be used in refrigeration/frost rooms where the time of defrost is not as important. In refrigeration/frost rooms, this setting can ensure major savings as defrosts take place only when necessary. Scheduled defrosts will always be carried out. That is to say, a basic schedule can be input and the adaptive function will then start extra defrosts itself where necessary..

Minimum time between defrosts

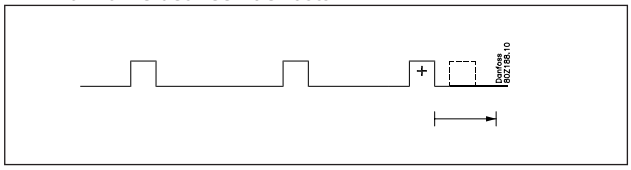

It is possible to enter a minimum time between defrosts. In this way it can be avoided that planned defrosts according to the weekly schedule be carried out immediately after the termination of a adaptive defrost. The time span is from the termination of a adaptive defrost and until a planned defrost is again allowed.

Documentation on saving
It is possible to read the number of planned defrosts and the number of cancelled defrosts.

Alarms

- Appliance not defrosted
  If this function detects ice formation shortly after defrost, the "Appliance not defrosted" alarm is generated. This error may be due to the evaporator not being defrosted correctly as a consequence of faults in heating elements or fans. After this alarm, the function will not cancel defrosts.
  This alarm is removed at the start of the next defrost, at which point cancellation of defrosts will be permitted again.

- Air flow reduced
  If this function detects severe ice formation on the evaporator, the alarm "Appliance X – air flow reduced" is transmitted. This error will typically be due to severe ice formation on the evaporator, but it may also be due to reduced air flow as a consequence of severe over stacking of goods or dropout of fans. After this alarm, the function will not cancel defrosts.
  This alarm is removed at the start of the next defrost, at which point cancellation of defrosts will be permitted again.

- Sensor error
  The controller cannot carry out a tuning calculation for use in the adaptive defrosting.
  After this alarm, the function will not cancel defrosts.
  This alarm is removed at the start of the next defrost, at which point cancellation of defrosts will be permitted again.

- Flash gas alarm
  This function will monitor whether there is any flash gas at the expansion valve. If flash gas is detected over a fairly long period, the alarm "Appliance X – Flash gas alarm" is triggered.
  This alarm is removed when flash gas disappears or at the start of the next defrost.

- Valve
  The function is suitable for application of a valve from Danfoss. Valves from other manufacturers is not recommended.

Miscellaneous

Alarm priorities
The different alarms that can be generated by the controller can be given a priority.
"priority" will activate the alarm relay if it has been so defined. The alarms are entered in the alarm log and also transmitted to the data communication if connected.
The "Log only" priority will as mentioned only be entered in the alarm log.

Setting	Log	Selection Alarm relay				Grid work	AKM-dest.
		Non	High	Low - Middle	Low - High		
High	X		X		X	X	1
Medium	X			X	X	X	2
Low	X			X	X	X	3
Log Only	X						
Disabled							

Sensor correction
The input signal from all connected sensors can be corrected. A correction will only be necessary if the sensor cable is long and has a small cross-sectional area. All displays and functions will reflect the corrected value.

Clock function
The controller contains a clock function, that can be used together with schedules for defrost and day/night operation.
In case of power failure the clock must be reset.
If the controller is linked up to a System Manager via the data communication, the System Manager will reset the clock.

Signals via data communication
The controller contains a number of functions that can be activated/overridden by the network's system unit:

Night operation
The day/night operation of the individual controllers can be controlled from a central weekly schedule in the system unit.

Interruption of injection
The system unit can ensure that all appliance and room controllers force-close their valves if all compressors in the belonging central plant stop due to operation breakdowns and are prevented from starting again.

Light control
In appliance controllers the light can be controlled via a central weekly schedule in the system unit.

Coordinated defrost
Several appliance controllers can be grouped in the system unit so that they will start a defrost at the same time and subsequently start up after defrost at the same time.

Adaptive defrosting
By using the "Adaptive Defrosting" function the controller must receive a condensing pressure signal Pc. This signal must be received from the AK-SM 720 System Manager.

Optimization of suction pressure
The appliance/room controllers can supply the necessary information to the system unit so that it can optimise the suction pressure based on the appliance with the heaviest load.

Forced refrigeration
The controller will undertake refrigeration when this signal is received. Refrigeration will continue until the signal is removed. The function will ignore the thermostat function, but forced cooling will be stopped if there is a low temperature alarm. (If a setting means that forced cooling and defrosting are required at the same time, defrosting will have the higher priority.)

Display signal

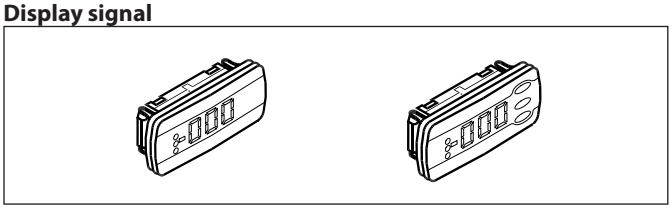

The air temperatures measured at the evaporator can be read from a display. This display must be of display type EKA 163B or EKA 164B. The display is normally mounted on the appliance so that the customer can see the air temperature. Up to four displays per controller can be fitted.
Connection is effected by means of wires with plug connectors.
The display can be placed on an appliance front, for example.
When a display with operating buttons is selected, the unit can be operated with ease by means of a menu system as well as displaying temperatures and operating situations.

Display signal
Temperature display can be selected for a product sensor, or alternatively a weighted condition between air sensors S3 and S4.
Setting is expressed as a percentage of the S4 signal.
The display is independent of the thermostat function.
An Offset can be set for the display.
Values are displayed by means of three digits, and one setting allows you
to decide whether the temperature is to be displayed in °C or °F.

LEDs on the front
The LEDs will come on when the associated relay is activated:
2nd LED = refrigeration
3rd LED = defrost
4th LED = ventilator operational
The LEDs will flash when an alarm has been triggered.
In this situation, you can call up the error code on the display by briefly pressing the top button. At the same time, any alarm relays will be deactivated.

The buttons
When you want to change a setting, the top and bottom buttons will give a higher or a lower value depending on which button you press. Before you can change the value, you must access the menu. This is done by holding down the top button for a couple of seconds; this takes you into the list of parameter codes. Find the parameter code you want to change, then press the centre button to display the parameter value. When you have changed this value, save the new value by pressing the centre button again

Examples:
Setting a menu
1. Press the top button to display a parameter
2. Press the top or bottom button and find the parameter you want to set
3. Press the centre button to display the value

4. Press the top or bottom button and set the new value
5. Press the centre button again to save the value.

.

Setting the temperature

1. Press the centre button to display the temperature setting
2. Press the top or bottom button and set the new value
3. Press the centre button to save the setting.

Read the temperature at the defrost sensor)

• Briefly press the bottom button

Manual start or stop of defrost

• Press the bottom button for 4 seconds.

Read codes

Normally the selected temperature signal can be read from the display, but under certain conditions the display may show other codes in order to notify the user of various operating states.

Function	Display read
Main switch	When the "main switch" is set to OFF, the display will read "OFF"
Defrost	During defrost, the display will read "-d-". The display will switch to normal temperature display when the thermostat temperature is in place, but not until after the delay period "High temp alarm delay".
Case cleaning	When appliance cleaning is activated, the display will read "Fan" to indicate that the fans are running in order to defrost the evaporator. When the second stage of appliance cleaning is activated, the display reads "OFF" in order to indicate that the appliance can now be cleaned as all outputs are in standby position.
PAS	Requirement for access code. If operation of the display is to be protected by an access code, both the definition and the access code must be set in the controllers' authorisation menu for the local display (LOCD).
Alarm	The three LED's will flash if an alarm is triggered. The alarm code can be viewed by pressing the top button.
- - -	When three dashes appear, the valid temperature reading is faulty (sensor switched off or short-circuited), or else the display has been deactivated.
th1/th2	When the thermostat bank is changed by pressing a button, the display will display for 10 seconds which thermostat band is active.
AL 1	Alarm from section A. 2=B. etc.
- - 1 - - 2	Initiation, Display is connected to output A Output B. etc.

Get off to a good start when use of display

The following procedure will start regulation as quickly as possible:

1. Open parameter r12 and stop regulation (in a new appliance not set previously, r12 will already be set to 0, which means regulation stopped)
2. Open parameter o93 and set the configuration lock to a value of 0 (=OFF)
3. Open parameter 062 = Select a predefined use on the basis of the electrical connections which appear at the end of the manual. After configuration of this function, the controller will shut down and restart.
4. Once the controller has restarted, open parameter 093 and the configuration lock is opened = value 0.
5. If AKV valves are used, you must also select refrigerant via parameter o30.
6. Open parameter r12 and start regulation.
7. When there is a network: set the address for the address switch in the controller.
8. Send this address to the system unit by activating a service pin.

Menu overview:

A display can be connected for each evaporator section. In each display, the following settings/readings can be undertaken for the evaporator section in question.

Parameter name	Function	At start-up
r12	Main switch: 0: Controller stopped 1: Regulation	x
r22	Select thermostat band: 1 = Thermostat band 1 is active 2 = Thermostat band 2 is active	
r37	Setting of cut-out value for the thermostat in section A/B/C/D	
r38	Setting of cut-out value for thermostat band 2	
o30	Setting of refrigerant (must be set if AKV valves are used) 0= not selected, 1=R12. 2=R22. 3=R134a. 4=R502. 5=R717. 6=R13. 7=R13b1. 8=R23. 9=R500. 10=R503. 11=R114. 12=R142b. 13=User def. 14=R32. 15=R227. 16=R401A. 17=R507. 18=R402A. 19=R404A. 20=R407C. 21=R407A. 22=R407B. 23=R410A. 24=R170. 25=R290. 26=R600. 27=R600a. 28=R744. 29=R1270. 30=R417A. 31=R422A. 32=R413A. 33=R422D. 34=R427A. 35=R438A. 36=R513A. 37=R407F. 38=R1234ze. 39=R1234yf. 40=R448A. 41=R449A. 42=R452A.	x
o46	Case cleaning function. Set: 0: Case cleaning not started 1: Only fan running (evaporator defrost) 2: All outputs are OFF (cleaning may be carried out)	
P81	Selection of pre-set application group: 1= group 1: o62 + page 98-101 2= group 2: o62 + page 102-105	x
o62	(P81 must be set before o62 can be set) Selection of predefined configuration. This setting will give a choice from a series of predefined combinations, which at the same time establish the connection points. At the end of the manual there is an overview of the options and connection points. After configuration of this function, the controller will shut down and restart.	x
o93	Configuration lock You can only select a preset configuration or change refrigerant when the configuration lock is open. 0 = Configuration open 1 = Configuration locked	x
u17	Actual air temperature for the thermostat in section A/B/C/D	
u20	Actual temperature at S2 sensor. Section A/B/C/D	
u21	Actual superheat. Section A/B/C/D	
u24	AKV valve opening degree. Section A/B/C/D	
u26	Actual evaporating temperature. Section A/B/C/D	
u36	Actual air temperature for product sensor in section A/B/C/D	
u68	Actual air temperature for alarm thermostat in section A/B/C/D	

X = When the controller is not set up, the display will only read the marked settings

Stepper Motor Valves

When selecting a Danfoss stepper motor valve, all settings are factory set. Here, it is only necessary to select the type of valve.
If a valve from other manufacturers is used the following settings has to be made. Get data from the valve manufacturer:

Max Operating Steps.
The number of steps that correspond to a valve position of 100%.
This value is limited to a range of 0 - 10,000 steps.

Hysteresis
The number of steps needed to correct for mechanical hysteresis when a reduction gear is part of the valve design.
This adjustment is only applied, if an additional opening of the valve is requested.
If this is the case the valve opens an additional amount equal to this value, before driving the valve in the closing direction by this same value.
This value is limited to 0 – 127 steps.

Step Rate
The desired valve drive rate in steps per second.
This value is limited to 20 – 500 steps / sec.

Holding Current
The percent of the programmed Max Phase Current that should be applied to each phase of the stepper output when the valve is stationary. If required, this current ensures that the valve maintains its last programmed position. This value is limited to a range of 0 – 70% given in 10% steps.

Overdrive at Valve Init
During valve initialization, the amount to overdrive the valve, beyond the 0% position, to ensure that the valve has fully closed.
This value is limited to a range of 0 - 31%.

Phase Current
The current applied to each phase of the stepper motor during actual valve movement. This value is limited to 7 bits and a range of 0 – 1000 mA given in 10ma steps. Verify the range against the stepper valve controller in the actual design.
Please be aware, that this value hat to be set in a RMS value. Some valve manufacturers are using peak current!

Soft Landing after Valve Init
At power on the valve is performing a valve Initialization i.e. closing the valve with "Max Operating Steps" plus "Overdrive At Valve Init "steps to generate a zero point calibration of the system . Hereafter a "Soft landing after Valve Init" is made to minimize the closing force on the valve seat with a few opening steps according to setting of "Hysteresis" or min 20 steps

Failsafe Position
During failsafe mode of operation (e.g., resulting from a loss of communications to this module), specifies the default valve position. This value is limited to a range of 0 – 100%.

AKS 32R info

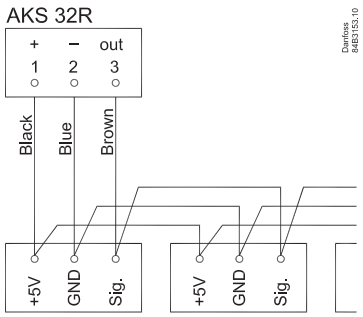

The signal from one pressure transmitter can be received from up to 5 controllers

Information

The controller offers quite a number of status displays which are invaluable in connection with operational start-up and optimisation.

Thermostat function
Display of S3 air admission
Display of S4 air emission
Display of weighted S3/S4 thermostat temperature
Min., Max. and Average thermostat temperature / 24 hours
Average thermostat coupling in % / 24 hours
Running time for cutin period in progress or for the last cutin period

Alarm thermostat
Display of weighted S3/S4 alarm temperature
Min., Max. and Average alarm temperature / 24 hours
Percentage of time where the alarm temperature was outside the limits / 24 hours

Product sensor
Display of the temperature at the product sensor
Min., Max and Average of product temperature / 24 hours
Percentage of time where the product temperature was outside the limits / 24 hours

Injection function
AKV /ETS opening degree in %
Average opening degree / 24 hours
Evaporating pressure
S2 gas temperature
Superheat
Superheat reference

Defrost
Actual defrost status
Degree of icing-up of evaporator
Duration of on-going or last defrost
Average duration of the last ten defrosts
Duration of cooling-down after defrost
Defrost sensor temperature
Number of planned and skipped defrosts

Compressor
Operating time last 24 hours
Total operating time
Number of couplings last 24 hours
Total number of couplings

Door contact
Door contact status
Duration of last opening
Number of openings last 24 hours
Opening time last 24 hours

Rail heat
Dew point
Actual duty cycle

Appliance cleaning
Time of last cleaning
Duration of last cleaning

Input and output status
Status display of all inputs and outputs
Manual overriding of all outputs

NB: Not all displays are available via AKM – Cf. the AKM menu description for further details.

Regulating status

The controller goes through some regulating situations. You can see the actual situation here.
When operating with AK-ST the text is written on the screen for the section. When operating from AKM the operating status is a numerical value.
The values are, as follows:
0: Refrigeration stopped from Main Switch
1: Start-up phase for the injection function
2: Adaptive regulation of the superheat
3: -
4: Defrost
5: Start-up after defrost
6: Forced closing
7: Injection function failure
8: Sensor error and emergency refrigeration
9: Modulating thermostat control
10: Melting function is active
11: Open door
12: Case cleaning
13: Thermostat cutout
14: Forced refrigeration
15: Shut down

Defrost state
During and immediately after a defrost the defrost status will be:
1: Evaporator is emptied
3: Defrost
5: Evaporating pressure is lowered
6: The liquid injection is delayed
7: Fan delay

Installation considerations
Accidental damage, poor installation, or site conditions, can give rise to malfunctions of the control system, and ultimately lead to a plant breakdown.
Every possible safeguard is incorporated into our products to prevent this. However, a wrong installation, for example, could still present problems. Electronic controls are no substitute for normal, good engineering practice.
Danfoss will not be responsible for any goods, or plant components, damaged as a result of the above defects. It is the installer's responsibility to check the installation thoroughly, and to fit the necessary safety devices.
Particular attention is drawn to the need for a "force closing" signal to controllers in the event of compressor stoppage, and to the requirement for suction line accumulators.

Your local Danfoss agent will be pleased to assist with further advice, etc.

The controller is not built for use on plate heat exchangers.

NH3 + AKVA
Please contact Danfoss if you require help concerning the positioning of sensors, transmitters, etc.

Alarm texts

Setting of priority	Default priority	Alarm text	Description
Temperature alarms			
High air temp. A	High	High air temp. (A,B,C,D)	The air temperature has been above the high alarm limit for longer time than set delay
Low air temp. A	High	Low air temp. (A,B,C,D)	The air temperature has been below the low alarm limit for longer time than set delay
Frost protect A	High	Frost protection, too low S4 (A,B,C,D)	The air off temperature (S4) is below the set frost protection limit
High Prod. temp. A	High	High Prod. temp. (A,B,C,D)	The product temperature has been above the high alarm limit for longer time than set delay
Low prod. temp. A	High	Low prod. temp. (A,B,C,D)	The product temperature has been below the low alarm limit for longer time than set delay
Same for B,C,D			
Sensor errors			
Pe sensor error	Low	Po sensor error	Pressure transmitter signal for evaporating pressure faulty
S2A sensor error	High	S2A sensor error (B,C,D)	S2A temp. sensor signal faulty
S3A sensor error	High	S3A sensor error (B,C,D)	S3A temp. sensor signal faulty
S4A sensor error	High	S4A sensor error (B,C,D)	S4A temp. sensor signal faulty
S5-1A sensor error	High	S5-1A sensor error (B,C,D)	S5-1A temp. sensor signal faulty
S5-2A sensor error	High	S5-2A sensor error (B,C,D)	S5-2A temp. sensor signal faulty
Prod. sensor error A	High	Product temp. A sensor error (B,C,D)	Product temp. sensor signal faulty
Same for B,C,D			
Saux1 sensor error	High	Saux1 sensor error	Saux1 temp. sensor signal faulty
Saux2 sensor error	High	Saux2 sensor error	Saux2 temp. sensor signal faulty
Saux3 sensor error	High	Saux3 sensor error	Saux3 temp. sensor signal faulty
Saux4 sensor error	High	Saux4 sensor error	Saux4 temp. sensor signal faulty
Pc sensor error	High	Pc sensor error	Pressure transmitter signal for condensing pressure faulty
Paux1 sensor error	High	Paux1 sensor error	Paux1 pressure transmitter signal faulty
Paux2 sensor error	High	Paux2 sensor error	Paux2 pressure transmitter signal faulty
Paux3 sensor error	High	Paux3 sensor error	Paux3 pressure transmitter signal faulty
Various alarms			
Standby mode	Medium	Control stopped, MainSwitch=OFF	The control has been stopped via the setting "Main switch" = ON or via the external Main switch input
Refrigerant changed	Low	Refrigerant changed	The refrigerant setting has been changed
Case cleaning	High	Case cleaning initiated	A case cleaning has been initiated
Door open pre alarm	Low	Door open pre alarm	The door has been open for longer time than 75% of the set alarm delay
Door open alarm	Medium	Door open alarm	The door has been open for longer time than set alarm delay
Injection problem A, B, C, D	Medium	Injection problem (A,B,C,D)	The AKV valve can not control the superheat of the evaporator
Max def period A,B,C,D	Low	Max defrost time exceeded (A,B,C,D)	The last defrost cycle has terminated on time instead of temperature
Max fan del exceeded A,B,C,D	Low	Max fan del ay time exceeded (A,B,C,D)	The fans have been started on time instead of temperature after a defrost
Max hold time A,B,C,D	Low	Max defrost hold time (A,B,C,D)	After a defrost cycle the evaporator has restarted cooling as it did not get a release signal via the defrost co-ordination setup in the network manager (AKA gateway)
Air flow alarm A,B,C,D	Low	AD - Case X - Air flow reduced	The air flow at the evaporator is greatly reduced – either as a consequence of severe ice formation, a fan fault or other obstruction.
AD – Case A not defrosted (B,C,D)	Low	AD - Case X not defrosted	The air flow is continuously reduced after defrost has been carried out
AD – Fault case A,B,C,D	Low	AD - Sensor error A,B,C,D	Tuning problem in adaptive defrost
AD – Flash gas evapora. A,B,C,D	Low	AD – Flash gas detect A,B,C,D	Flash gas has been detected at the valve for a relatively long time

General alarms

Thermostat x – Low temp. alarm	Low	Thermostat x - Low alarm	The temperature for thermostat no. x has been below the low alarm limit for longer time than set delay
Thermostat x – High temp. alarm	Low	Thermostat x - High alarm	The temperature for thermostat no. x has been above the high alarm limit for longer time than set delay
Pressostat x – Low pressure alarm	Low	Pressostat x - Low alarm	The pressure for pressostat no. x has been below the low alarm limit for longer time than set delay
Pressostat x – High pressure alarm	Low	Pressostat x - High alarm	The pressure for pressostat no. x has been above the high alarm limit for longer time than set delay
Voltage input x – Low alarm	Low	Analog input x - Low alarm	The voltage signal has been below the low alarm limit for longer time than set delay
Voltage input x – High alarm	Low	Analog input x - High alarm	The voltage signal has been above the high alarm limit for longer time than set delay
DIx alarm input	Low	DIx alarm	Alarm on general alarm input DI x
Stepper valve	High	Stepper - Inj. A, B, C. D. Open coil, Shorted output, Error, Power failure	Check supply to the actual valve

System alarms

The alarm priority can not be altered on system alarms			
	Medium	Clock has not been set	Time has not been set
	Medium	System Critical exception	A unrecoverable critical system failure has occurred – exchange the controller
	Medium	System alarm exception	A minor system failure has occurred – power off controller
	Medium	Alarm destination disabled	When this alarm is activated the alarm transmission to the alarm receiver has been deactivated. When the alarm is cleared the alarm transmission to the alarm receiver has been activated.
	Medium	Alarm route failure	Alarms can not be transmitted to alarm receiver – check communication
	High	Alarm router full	The internal alarm buffer has an overrun – this might occur if the controller can not send the alarms to the alarm receiver. Check communication between controller and AKA gateway.
	Medium	Device is restarting	The controller is restarting after flash updating of the software
	Medium	IO module error	There is a communication fault between the controller module and the extension modules – the fault must be corrected as soon as possible
	Low	MAN DI…….	The output in question has been put in manual control mode via the AK-ST 500 service tool software
	Low	MAN DO……	The output in question has been put in manual control mode via the AK-ST 500 service tool software

Appendix - Recommended connection Group 1

Function
The controller has a setting where you can choose between various types of installation. If you use these settings, the controller will suggest a series of connection points for the different functions. These points are shown below.

Even if your installation is not 100% as described below, you can still use the function. After use, you need only adjust the divergent settings.
The given connection points in the controller can be changed if you wish.

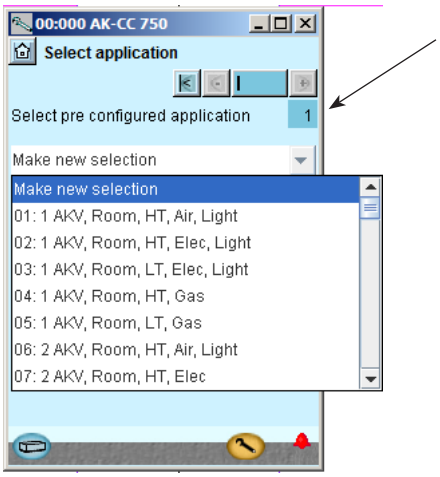

Room

Appl. type	No. of AKV	Def. type	Air sensor	Controller - (Module no. 1 point 1-19)																
				AI1	AI2	AI3	AI4	AI5	AI6	AI7	AI8	AI9	AI10	AI11	DO1	DO2	DO3	DO4	DO5	DO6
				pt1	**pt2**	**pt3**	**pt4**	**pt5**	**pt6**	**pt 7**	**pt8**	**pt 9**	**pt10**	**pt 11**	**pt 12**	**pt 13**	**pt 14**	**pt 15**	**pt 16**	**pt 17**
Room	1	Air	S3	S2A	S3A						For. cl.	Door	Main s.	Po	AKV A			Light	Rail heat	Comp.
Room	1	El	S3	S2A	S3A		S5A				For. cl.	Door	Main s.	Po	AKV A	Def.		Light	Rail heat	Comp.
Room	1	Gas	S3	S2A	S3A		S5A				For. cl.	Door	Main s.	Po	AKV A	Def.	Drain	Suction	Rail heat	Comp.
Room	2	Air	S3	S2A	S3A	S2B					For. cl.	Door	Main s.	Po	AKV A	AKV B		Light	Rail heat	Comp.
Room	2	El	S3	S2A	S3A		S5A	S2B		S5B	For. cl.	Door	Main s.	Po	AKV A	AKV B	Def. A	Def. B	Rail heat	Comp.
Room	2	El	S3	S2A	S3A		S5A	S2B		S5B	For. cl.	Door	Main s.	Po	AKV A	AKV B	Def. A	Def. B	Light	Comp.
Room	2	Gas	S3	S2A	S3A		S5A	S2B		S5B	For. cl.	Door	Main s.	Po	AKV A	AKV B			Def. A	Def. B
Room	2	Gas	S3	S2A	S3A		S5A	S2B		S5B	For. cl.	Door	Main s.	Po	AKV A	AKV B	Def. A	Def. B	Suction	Comp.
Room	3	Air	S3	S2A	S3A	S2B		S2C			For. cl.	Door	Main s.	Po	AKV A	AKV B	AKV C	Light	Rail heat	Comp.
Room	3	El	S3	S2A	S3A		S5A	S2B		S5B	For. cl.	Door	Main s.	Po	AKV A	AKV B	AKV C		Def. A	Def. B
Room	3	Gas	S3	S2A	S3A		S5A	S2B		S5B	For. cl.	Door	Main s.	Po	AKV A	AKV B	AKV C		Def. A	Def. B
Room	4	Air	S3	S2A	S3A	S2B		S2C		S2D	For. cl.	Door	Main s.	Po	AKV A	AKV B	AKV C	AKV D	Rail heat	Comp.
Room	4	El	S3	S2A	S3A		S5A	S2B		S5B	For. cl.	Door	Main s.	Po	AKV A	AKV B	AKV C	AKV D	Def. A	Def. B
Room	4	Gas	S3	S2A	S3A		S5A	S2B		S5B	For. cl.	Door	Main s.	Po	AKV A	AKV B	AKV C	AKV D	Def. A	Def. B

			Module 2= AK-XM 205)																App.no at setting via AKM or display	
	DO7	DO8	AI1	AI2	AI3	AI4	AI5	AI6	AI7	AI8	DO1	DO2	DO3	DO4	DO5	DO6	DO7	DO8		
	pt 18	**pt 19**	**pt1**	**pt2**	**pt3**	**pt4**	**pt5**	**pt6**	**pt 7**	**pt8**	**pt 9**	**pt10**	**pt 11**	**pt 12**	**pt 13**	**pt 14**	**pt 15**	**pt 16**	**High temp.**	**Low temp.**
	Fan	Alarm																	1	
	Fan	Alarm																	2	3
	Fan	Alarm																	4	5
	Fan	Alarm																	6	
	Fan	Alarm																	7	8
	Fan	Alarm																	47	48
											Rail heat	Comp.	Fan	Alarm	Suction	Drain	Light		10	12
	Fan	Alarm																	9	11
	Fan	Alarm																	13	
	Def. C										Rail heat	Comp.	Fan	Alarm			Light		14	15
	Def. C		S2C			S5C					Rail heat	Comp.	Fan	Alarm	Suction	Drain	Light		16	17
	Fan	Alarm																	18	
	Def. C	Def. D	S2C			S5C	S2D			S5D	Rail heat	Comp.	Fan	Alarm					19	20
	Def. C	Def. D	S2C			S5C	S2D			S5D	Rail heat	Comp.	Fan	Alarm	Suction	Drain	Light		21	22

Cases

Appl. type	No. of AKV	Def. type	Air sensor	Controller - (Module no. 1 point 1-19)																
				AI1	AI2	AI3	AI4	AI5	AI6	AI7	AI8	AI9	AI10	AI11	DO1	DO2	DO3	DO4	DO5	DO6
				pt1	**pt2**	**pt3**	**pt4**	**pt5**	**pt6**	**pt 7**	**pt8**	**pt 9**	**pt10**	**pt 11**	**pt 12**	**pt 13**	**pt 14**	**pt 15**	**pt 16**	**pt 17**
	1	Air	S3 + S4	S2A	S3A	S4A						For. cl.	Main s.	Po	AKV A		Light		Rail heat	Comp.
	1	Air	S3 + S4	S2A	S3A	S4A					Blinds	For. cl.	Main s.	Po	AKV A		Light	Blinds	Rail heat	Comp.
	1	El	S3 + S4	S2A	S3A	S4A	S5A					For. cl.	Main s.	Po	AKV A	Def. A	Light		Rail heat	Comp.
2 evap.	1	El	S3 + S4	S2A	S3A	S4A	S5-1A	S5-2A	S6A			For. cl.	Main s.	Po	AKV A	Def. A	Light		Rail heat	Comp.
	1	El	S3 + S4	S2A	S3A	S4A	S5A				Blinds	For. cl.	Main s.	Po	AKV A	Def. A	Light	Blinds	Rail heat	Comp.
CO_2	1	El	S3 + S4	S2A	S3A	S4A	S5A					For. cl.	Main s.	Po	AKV A	Def. A	Light		Rail heat	Comp.
CO_2 2 evap.	1	El	S3 + S4	S2A	S3A	S4A	S5-1A	S5-2A	S6A			For. cl.	Main s.	Po	AKV A	Def. A	Light		Rail heat	Comp.
	1	Gas	S3 + S4	S2A	S3A	S4A	S5A					For. cl.	Main s.	Po	AKV A	Def.	Drain	Suction	Rail heat	Comp.
	1	Gas	S3 + S4	S2A	S3A	S4A	S5A					For. cl.	Main s.	Po	AKV A	Def.	Drain	Suction	Light	Comp.
	1	Gas	S3 + S4	S2A	S3A	S4A	S5A					For. cl.	Main s.	Po	AKV A				Def.	
	2	Air	S3 + S4	S2A	S3A	S4A		S2B	S3B	S4B		For. cl.	Main s.	Po	AKV A	AKV B	Light		Rail heat	Comp.
	2	Air	S3 + S4	S2A	S3A	S4A		S2B	S3B	S4B	Blinds	For. cl.	Main s.	Po	AKV A	AKV B	Light	Blinds	Rail heat	Comp.
	2	El	S3 + S4	S2A	S3A	S4A	S5A	S2B	S3B	S4B	S5B	For. cl.	Main s.	Po	AKV A	AKV B	Def. A	Def. B	Rail heat	Comp.
	2	El	S3 + S4	S2A	S3A	S4A	S5A	S2B	S3B	S4B	S5B	For. cl.	Main s.	Po	AKV A	AKV B	Def. A	Def. B	Light	Comp.
2 evap.	2	El	S3 + S4	S2A	S3A	S4A	S5A	S2B	S3B	S4B	S5B	For. cl.	Main s.	Po	AKV A	AKV B			Def. A	Def. B
	2	El	S3 + S4	S2A	S3A	S4A	S5A	S2B	S3B	S4B	S5B	For. cl.	Main s.	Po	AKV A	AKV B			Def. A	Def. B
CO_2	2	El	S3 + S4	S2A	S3A	S4A	S5A	S2B	S3B	S4B	S5B	For. cl.	Main s.	Po	AKV A	AKV B	Def. A	Def. B	Rail heat	Comp.
CO_2	2	El	S3 + S4	S2A	S3A	S4A	S5A	S2B	S3B	S4B	S5B	For. cl.	Main s.	Po	AKV A	AKV B			Def. A	Def. B
CO_2 2 evap.	2	El	S3 + S4	S2A	S3A	S4A	S5-1A	S2B	S3B	S4B	S5-1B	For. cl.	Main s.	Po	AKV A	AKV B			Def. A	Def. B
	2	Gas	S3 + S4	S2A	S3A	S4A	S5A	S2B	S3B	S4B	S5B	For. cl.	Main s.	Po	AKV A	AKV B	Def. A	Def. B	Suction	Comp.
	2	Gas	S3 + S4	S2A	S3A	S4A	S5A	S2B	S3B	S4B	S5B	For. cl.	Main s.	Po	AKV A	AKV B			Def. A	Def. B
	2	Gas	S3 + S4	S2A	S3A	S4A	S5A	S2B	S3B	S4B	S5B	For. cl.	Main s.	Po	AKV A	AKV B			Def. A	Def. B
	3	Air	S3 + S4	S2A	S3A	S4A	S2B	S3B	S4B	S2C	S3C	S4C	Main s.	Po	AKV A	AKV B	AKV C	Light	Rail heat	Comp.
	3	Air	S3 + S4	S2A	S3A	S4A		S2B	S3B	S4B		For. cl.	Main s.	Po	AKV A	AKV B	AKV C		Rail heat	Comp.
	3	Air	S3 + S4	S2A	S3A	S4A		S2B	S3B	S4B	Blinds	For. cl.	Main s.	Po	AKV A	AKV B	AKV C		Rail heat	Comp.
	3	El	S3 + S4	S2A	S3A	S4A	S5A	S2B	S3B	S4B	S5B	For. cl.	Main s.	Po	AKV A	AKV B	AKV C		Def. A	Def. B
	3	El	S3 + S4	S2A	S3A	S4A	S5A	S2B	S3B	S4B	S5B	For. cl.	Main s.	Po	AKV A	AKV B	AKV C		Def. A	Def. B
CO_2	3	El	S3 + S4	S2A	S3A	S4A	S5A	S2B	S3B	S4B	S5B	For. cl.	Main s.	Po	AKV A	AKV B	AKV C		Def. A	Def. B
	3	Gas	S3 + S4	S2A	S3A	S4A	S5A	S2B	S3B	S4B	S5B	For. cl.	Main s.	Po	AKV A	AKV B	AKV C		Def. A	Def. B
	3	Gas	S3 + S4	S2A	S3A	S4A	S5A	S2B	S3B	S4B	S5B	For. cl.	Main s.	Po	AKV A	AKV B	AKV C		Def. A	Def. B
	4	Air	S3 + S4	S2A	S3A	S4A		S2B	S3B	S4B		For. cl.	Main s.	Po	AKV A	AKV B	AKV C	AKV D	Rail heat	Comp.
	4	Air	S3 + S4	S2A	S3A	S4A		S2B	S3B	S4B	Blinds	For. cl.	Main s.	Po	AKV A	AKV B	AKV C	AKV D	Rail heat	Comp.
	4	El	S3 + S4	S2A	S3A	S4A	S5A	S2B	S3B	S4B	S5B	For. cl.	Main s.	Po	AKV A	AKV B	AKV C	AKV D	Def. A	Def. B
	4	El	S3 + S4	S2A	S3A	S4A	S5A	S2B	S3B	S4B	S5B	For. cl.	Main s.	Po	AKV A	AKV B	AKV C	AKV D	Def. A	Def. B
CO_2	4	El	S3 + S4	S2A	S3A	S4A	S5A	S2B	S3B	S4B	S5B	For. cl.	Main s.	Po	AKV A	AKV B	AKV C	AKV D	Def. A	Def. B
	4	Gas	S3 + S4	S2A	S3A	S4A	S5A	S2B	S3B	S4B	S5B	For. cl.	Main s.	Po	AKV A	AKV B	AKV C	AKV D	Def. A	Def. B
	4	Gas	S3 + S4	S2A	S3A	S4A	S5A	S2B	S3B	S4B		For. cl.	Main s.	Po	AKV A	AKV B	AKV C	AKV D	Def. A	Def. B

			Module 2= AK-XM 205)																App.no at setting via AKM or display	
	DO7	DO8	AI1	AI2	AI3	AI4	AI5	AI6	AI7	AI8	DO1	DO2	DO3	DO4	DO5	DO6	DO7	DO8		
	pt 18	**pt 19**	**pt1**	**pt2**	**pt3**	**pt4**	**pt5**	**pt6**	**pt 7**	**pt8**	**pt 9**	**pt10**	**pt 11**	**pt 12**	**pt 13**	**pt 14**	**pt 15**	**pt 16**	**High temp.**	**Low temp.**
	Fan	Alarm																	23	
	Fan	Alarm																	69	
	Fan	Alarm																	24	25
	Fan	Alarm																		52
	Fan	Alarm																	65	
	Fan	Alarm																		54
	Fan	Alarm																		59
	Fan	Alarm																	26	27
	Fan	Alarm																	45	46
										Blinds	Rail heat	Comp.	Fan	Alarm	Suction	Drain	Light	Blinds		61
	Fan	Alarm																	28	
	Fan	Alarm																	70	
	Fan	Alarm																	29	30
	Fan	Alarm																	49	50
			S6A	S6B			S5-2A	S5-2B			Rail heat	Comp.	Fan	Alarm			Light			53
										Blinds	Rail heat	Comp.	Fan	Alarm			Light	Blinds	66	
	Fan	Alarm																		55
											Rail heat	Comp.	Fan	Alarm			Light			56
			S6A	S6B			S5-2A	S5-2B			Rail heat	Comp.	Fan	Alarm			Light			60
	Fan	Alarm																	31	33
											Rail heat	Comp.	Fan	Alarm	Suction	Drain	Light		32	34
										Blinds	Rail heat	Comp.	Fan	Alarm	Suction	Drain	Light	Blinds	62	
	Fan	Alarm																	35	
	Fan	Alarm	S2C	S3C	S4C												Light		51	
	Fan	Alarm	S2C	S3C	S4C												Light	Blinds	71	
	Def. C		S2C	S3C	S4C	S5C					Rail heat	Comp.	Fan	Alarm			Light		36	37
	Def. C		S2C	S3C	S4C	S5C				Blinds	Rail heat	Comp.	Fan	Alarm			Light	Blinds	67	
	Def. C		S2C	S3C	S4C	S5C					Rail heat	Comp.	Fan	Alarm			Light			57
	Def. C		S2C	S3C	S4C	S5C					Rail heat	Comp.	Fan	Alarm	Suction	Drain	Light		38	39
	Def. C		S2C	S3C	S4C	S5C				Blinds	Rail heat	Comp.	Fan	Alarm	Suction	Drain	Light	Blinds	63	
	Fan	Alarm	S2C	S3C	S4C		S2D	S3D	S4D								Light		40	
	Fan	Alarm	S2C	S3C	S4C		S2D	S3D	S4D								Light	Blinds	72	
	Def. C	Def. D	S2C	S3C	S4C	S5C	S2D	S3D	S4D	S5D	Rail heat	Comp.	Fan	Alarm			Light		41	42
	Def. C	Def. D	S2C	S3C	S4C	S5C	S2D	S3D	S4D	S5D	Rail heat	Comp.	Fan	Alarm			Light	Blinds	68	
	Def. C	Def. D	S2C	S3C	S4C	S5C	S2D	S3D	S4D	S5D	Rail heat	Comp.	Fan	Alarm			Light			58
	Def. C	Def. D	S2C	S3C	S4C	S5C	S2D	S3D	S4D	S5D	Rail heat	Comp.	Fan	Alarm	Suction	Drain	Light		43	44
	Def. C	Def. D	S2C	S3C	S4C	S5C	S2D	S3D	S4D	S5D	Rail heat	Comp.	Fan	Alarm	Suction	Drain	Light	Blinds	64	

Appendix - Recommended connection Group 2

Function
The controller has a setting where you can choose between various types of installation. If you use these settings, the controller will suggest a series of connection points for the different functions. These points are shown below.

Even if your installation is not 100% as described below, you can still use the function. After use, you need only adjust the divergent settings.
The given connection points in the controller can be changed if you wish.

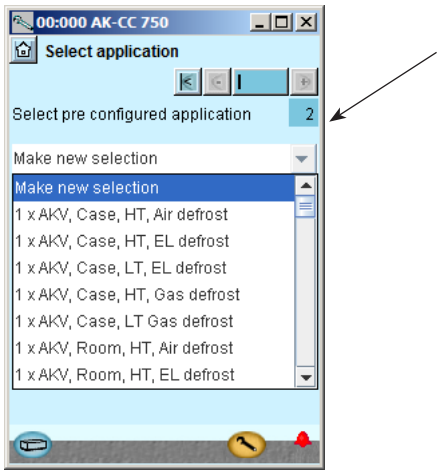

AKV valves

Appl. type	No. of AKV	Def. type	Air sensor	Controller - (Module no. 1 point 1-19)																
				AI1	AI2	AI3	AI4	AI5	AI6	AI7	AI8	AI9	AI10	AI11	DO1	DO2	DO3	DO4	DO5	DO6
				pt1	**pt2**	**pt3**	**pt4**	**pt5**	**pt6**	**pt 7**	**pt8**	**pt 9**	**pt10**	**pt 11**	**pt 12**	**pt 13**	**pt 14**	**pt 15**	**pt 16**	**pt 17**
Room	1	Air	S3A + S4A	S2A	S3A	S4A							Door	Po	AKV A					Rail heat
		EL	S3A + S4A	S2A	S3A	S4A	S5A						Door	Po	AKV A	Def.				Rail heat
		Gas	S3A + S4A	S2A	S3A	S4A	S5A						Door	Po	AKV A	Def.	Suction	Drain		Rail heat
	2	Air	S3A + S4A	S2A	S3A	S4A		S2B					Door	Po	AKV A	AKV B				Rail heat
		EL	S3A + S4A	S2A	S3A	S4A	S5A	S2B	S5B				Door	Po	AKV A	AKV B	Def. A	Def. B		Rail heat
		Gas	S3A + S4A	S2A	S3A	S4A	S5A	S2B	S5B				Door	Po	AKV A	AKV B	Def. A	Def. B	Suction	Drain
	3	Air	S3A + S4A	S2A	S3A	S4A		S2B		S2C			Door	Po	AKV A	AKV B	AKV C			Rail heat
		EL	S3A + S4A	S2A	S3A	S4A	S5A	S2B	S5B	S2C	S5C		Door	Po	AKV A	AKV B	AKV C	Def. A	Def. B	Def. C
		Gas	S3A + S4A	S2A	S3A	S4A	S5A	S2B	S5B	S2C	S5C		Door	Po	AKV A	AKV B	AKV C	Def. A	Def. B	Def. C
	4	Air	S3A + S4A	S2A	S3A	S4A	S2B		S2C		S2D		Door	Po	AKV A	AKV B	AKV C	AKV D		Rail heat
		EL	S3A	S2A	S3A	S5A	S2B	S5B	S2C	S5C	S2D	S5D	Door	Po	AKV A	AKV B	AKV C	AKV D	Def. A	Def. B
		Gas	S3A	S2A	S3A	S5A	S2B	S5B	S2C	S5C	S2D	S5D	Door	Po	AKV A	AKV B	AKV C	AKV D	Def. A	Def. B
Case	1	Air	S3 +S4	S2A	S3A	S4A						Clean	Blinds	Po	AKV A				Blinds	Rail heat
		EL	S3 + S4	S2A	S3A	S4A	S5A					Clean	Blinds	Po	AKV A	Def.			Blinds	Rail heat
		Gas	S3 + S4	S2A	S3A	S4A	S5A					Clean	Blinds	Po	AKV A	Def.	Suction	Drain	Blinds	Rail heat
	2	Air	S3 + S4	S2A	S3A	S4A		S2B	S3B	S4B		Clean	Blinds	Po	AKV A	AKV B			Blinds	Rail heat
		EL	S3 + S4	S2A	S3A	S4A	S5A	S2B	S3B	S4B	S5B	Clean	Blinds	Po	AKV A	AKV B	Def. A	Def. B	Blinds	Rail heat
		Gas	S3 + S4	S2A	S3A	S4A	S5A	S2B	S3B	S4B	S5B	Clean		Po	AKV A	AKV B	Def. A	Def. B	Suction	Drain
	3	Air	S3 + S4	S2A	S3A	S4A	S2B	S3B	S4B	S2C	S3C	S4C	Blinds	Po	AKV A	AKV B	AKV C		Blinds	Rail heat
		EL	S3 + S4	S2A	S3A	S4A	S5A	S2B	S3B	S4B	S5B		Clean	Po	AKV A	AKV B	AKV C	Def. A	Def. B	Def. C
		Gas	S3 + S4	S2A	S3A	S4A	S5A	S2B	S3B	S4B	S5B	Clean	Blinds	Po	AKV A	AKV B	AKV C	Def. A	Def. B	Def. C
	4	Air	S3 + S4	S2A	S3A	S4A		S2B	S3B	S4B		Clean	Blinds	Po	AKV A	AKV B	AKV C	AKV D	Blinds	Rail heat
		EL	S3 + S4	S2A	S3A	S4A	S5A	S2B	S3B	S4B	S5B	Clean	Blinds	Po	AKV A	AKV B	AKV C	AKV D	Def. A	Def. B
		Gas	S3 + S4	S2A	S3A	S4A	S5A	S2B	S3B	S4B	S5B	Clean	Blinds	Po	AKV A	AKV B	AKV C	AKV D	Def. A	Def. B

			(Module 2 = AK-XM 101A)															
											(Module 2 = AK-XM 204)							
			(Module no. 2 = AK-XM 205)															

			Module 2														App.no at setting via AKM or display	
	DO7	DO8	AI1	AI2	AI3	AI4	AI5	AI6	AI7	AI8	DO1	DO2	DO3	DO4	DO5	DO6		
	pt 18	**pt 19**															**High temp.**	**Low temp.**
	Light	Fan															6	
	Light	Fan															7	8
	Light	Fan															9	10
	Light	Fan															16	
	Light	Fan															17	18
	Light	Fan															19	20
	Light	Fan															26	
	Light	Fan															27	28
	Suction	Drain									Rail heat	Light	Fan				29	30
	Light	Fan															36	
	Def. C	Def. D									Rail heat	Light	Fan				37	38
	Def. C	Def. D									Rail heat	Light	Fan		Suction	Drain	39	40
	Light	Fan															1	
	Light	Fan															2	3
	Light	Fan															4	5
	Light	Fan															11	
	Light	Fan															12	13
	Light	Fan															14	15
	Light	Fan															21	
	Light	Fan	S2C	S3C	S4C	S5C											22	23
	Suction	Drain	S2C	S3C	S4C	S5C					Rail heat	Light	Fan	Blinds			24	25
	Light	Fan	S2C	S3C	S4C		S2D	S3D	S4D								31	
	Def. C	Def. D	S2C	S3C	S4C	S5C	S2D	S3D	S4D	S5D	Rail heat	Light	Fan	Blinds			32	33
	Def. C	Def. D	S2C	S3C	S4C	S5C	S2D	S3D	S4D	S5D	Rail heat	Light	Fan	Blinds	Suction	Drain	34	35

Solenoid valves

Appl. type	No. of LLSV	Def. type	Air sensor	Controller - (Module no. 1 point 1-19)																
				AI1	AI2	AI3	AI4	AI5	AI6	AI7	AI8	AI9	AI10	AI11	DO1	DO2	DO3	DO4	DO5	DO6
				pt1	**pt2**	**pt3**	**pt4**	**pt5**	**pt6**	**pt 7**	**pt8**	**pt 9**	**pt10**	**pt 11**	**pt 12**	**pt 13**	**pt 14**	**pt 15**	**pt 16**	**pt 17**
Room	1	Air	S3A + S4A	S3A	S4A									Door	LLSV A					Rail heat
		EL	S3A + S4A	S3A	S4A	S5A								Door	LLSV A	Def.				Rail heat
		Gas	S3A + S4A	S3A	S4A	S5A								Door	LLSV A	Def.	Suction	Drain		Rail heat
	2	Air	S3A + S4A	S3A	S4A									Door	LLSV A	LLSV B				Rail heat
		EL	S3A + S4A	S3A	S4A	S5A	S5B							Door	LLSV A	LLSV B	Def. A	Def. B		Rail heat
		Gas	S3A + S4A	S3A	S4A	S5A	S5B							Door	LLSV A	LLSV B	Def. A	Def. B	Suction	Drain
	3	Air	S3A + S4A	S3A	S4A									Door	LLSV A	LLSV B	LLSV C			Rail heat
		EL	S3A + S4A	S3A	S4A	S5A	S5B	S5C						Door	LLSV A	LLSV B	LLSV C	Def. A	Def. B	Def. C
		Gas	S3A + S4A	S3A	S4A	S5A	S5B	S5C						Door	LLSV A	LLSV B	LLSV C	Def. A	Def. B	Def. C
	4	Air	S3A + S4A	S3A	S4A									Door	LLSV A	LLSV B	LLSV C	LLSV D		Rail heat
		EL	S3A + S4A	S3A	S4A	S5A	S5B	S5C	S5D					Door	LLSV A	LLSV B	LLSV C	LLSV D	Def. A	Def. B
		Gas	S3A + S4A	S3A	S4A	S5A	S5B	S5C	S5D					Door	LLSV A	LLSV B	LLSV C	LLSV D	Def. A	Def. B
Case	1	Air	S3 +S4	S3A	S4A								Clean	Blinds	LLSV A				Blinds	Rail heat
		EL	S3 + S4	S3A	S4A	S5A							Clean	Blinds	LLSV A	Def.			Blinds	Rail heat
		Gas	S3 + S4	S3A	S4A	S5A							Clean	Blinds	LLSV A	Def.	Suction	Drain	Blinds	Rail heat
	2	Air	S3 + S4	S3A	S4A		S3B	S4B					Clean	Blinds	LLSV A	LLSV B			Blinds	Rail heat
		EL	S3 + S4	S3A	S4A	S5A	S3B	S4B	S5B				Clean	Blinds	LLSV A	LLSV B	Def. A	Def. B	Blinds	Rail heat
		Gas	S3 + S4	S3A	S4A	S5A	S3B	S4B	S5B				Clean	Blinds	LLSV A	LLSV B	Def. A	Def. B	Suction	Drain
	3	Air	S3 + S4	S3A	S4A		S3B	S4B		S3C	S4C		Clean	Blinds	LLSV A	LLSV B	LLSV C		Blinds	Rail heat
		EL	S3 + S4	S3A	S4A	S5A	S3B	S4B	S5B	S3C	S4C	S5C	Clean		LLSV A	LLSV B	LLSV C	Def. A	Def. B	Def. C
		Gas	S3 + S4	S3A	S4A	S5A	S3B	S4B	S5B	S3C	S4C	S5C	Clean	Blinds	LLSV A	LLSV B	LLSV C	Def. A	Def. B	Def. C
	4	Air	S3 + S4	S3A	S4A	S3B	S4B	S3C	S4C	S3D	S4D		Clean	Blinds	LLSV A	LLSV B	LLSV C	LLSV D	Blinds	Rail heat
		EL	S4	S4A	S5A	S4B	S5B	S4C	S5C	S4D	S5D		Clean	Blinds	LLSV A	LLSV B	LLSV C	LLSV D	Def. A	Def. B
		Gas	S4	S4A	S5A	S4B	S5B	S4C	S5C	S4D	S5D		Clean	Blinds	LLSV A	LLSV B	LLSV C	LLSV D	Def. A	Def. B

			Module 2 = AK-XM 204														App.no at setting via AKM or display	
	DO7	DO8	DO1	DO2	DO3	DO4	DO5	DO6	DO7	DO8								
	pt 18	**pt 19**	**2-pt1**	**2-pt2**	**2-pt3**	**2-pt4**	**2-pt5**	**2-pt6**	**2-pt7**	**2-pt8**							**High temp.**	**Low temp.**
	Light	Fan															46	
	Light	Fan															47	48
	Light	Fan															49	50
	Light	Fan															56	
	Light	Fan															57	58
	Light	Fan															59	60
	Light	Fan															66	
	Light	Fan															67	68
	Suction	Drain	Rail heat	Light	Fan												69	70
	Light	Fan															76	
	Def. C	Def. D	Rail heat	Light	Fan												77	78
	Def. C	Def. D	Rail heat	Light	Fan		Suction	Drain									79	80
	Light	Fan															41	
	Light	Fan															42	43
	Light	Fan															44	45
	Light	Fan															51	
	Light	Fan															52	53
	Light	Fan															54	55
	Light	Fan															61	
	Light	Fan															62	63
	Suction	Drain	Rail heat	Light	Fan												64	65
	Light	Fan															71	
	Def. C	Def. D	Rail heat	Light	Fan	Blinds											72	73
	Def. C	Def. D	Rail heat	Light	Fan	Blinds	Suction	Drain									74	75

Danfoss can accept no responsibility for possible errors in catalogues, brochures and other printed material. Danfoss reserves the right to alter its products without notice. This also applies to products already on order provided that such alternations can be made without subsequential changes being necessary in specifications already agreed.
All trademarks in this material are property of the respecitve companies. Danfoss and Danfoss logotype are trademarks of Danfoss A/S. All rights reserved.

ADAP-KOOL®