ENGINEERING
TOMORROW

Data Sheet

HOME series of Danfoss Redia® thermostats

Application





The Danfoss Redia® series is a comprehensive portfolio of premium quality thermostatic sensors, produced in Denmark.

The Danfoss Redia® thermostat uses liquid-filled technology, that gives fast reaction time and compact sensor size to fit most applications.

The Danfoss Redia® thermostat is installed onto a radiator valve. The combination of the thermostat and radiator valve, controls the individual room temperature at a given setpoint by adjusting the flow of hot water through the radiator.

The Danfoss Redia® thermostat is applicable to all types of heating applications, including applications with small calculated P-band.

Danfoss Redia® series includes:
- Standard thermostats with built-in
- Variants with connection for radiator valves and radiators with integrated valves, type Danfoss RA
- Variants with M30x1.5 connection for radiator valves and radiators with integrated valves

Features:
- Liquid-filled thermostat with precise temperature control
- Fast reaction time in thermostatic sensor category
- Highest-class Control Accuracy (CA 0.2 K) per amended EN215
- Danfoss RA Click mount - fast, save, tool-less
- Modern and user-friendly design
- Easy to operate, easy to clean
- Facilities designed for the visually impaired
- Facilities for limiting and locking temperature set-point
- Frost protection setting
- A theft protection, from factory or available as accessory

Quality

011

Danfoss Redia® thermostatic sensors are certified according to the European standard EN 215.

All Danfoss radiator thermostats are manufactured in factories, assessed and certified by by BVC (Bureau Veritas Certification) against ISO 9001 and ISO 14001.

Datasheet HOME series of Danfoss Redia® thermostats

Technical data

Type	Sensor	Response time	Differential pressure influence (D)	Hysteresis (C)	Water temperature influence (W)	Control Accuracy (CA)
Redia RA	Built-in	18 mins	0.10 K	0.20 K	0.68 K	0.2 K

Ordering and Specification

Type	Model	Sensor	Cap. tube	Set point range	Connection	Zero blocking	Limiter pins	Theft protec-tion	EN215 Certified	Code no.
Redia RA	Standard	Built-in		8-28°C	RA		✓		✓	**015G5120**
Redia M30	Standard	Built-in		8-28°C	M30x1.5		✓			**015G5121**

Accessories

Accessories		Code no.
	Anti-theft plug for snap-lock sensors, white (20 pcs.)	**013G5245**
	Blocking pin (130 pcs.)	**013G5199**
	Toolkit comprising Allen key & locking pin tool	**013G1236**
	Theft protection for M30 sensors (10 pcs.)	**013G5287**
	Partner clip	**015G3900**

© Danfoss Climate Solutions | 12.2025 | AI432927896060en-000102

Datasheet HOME series of Danfoss Redia® thermostats

Construction

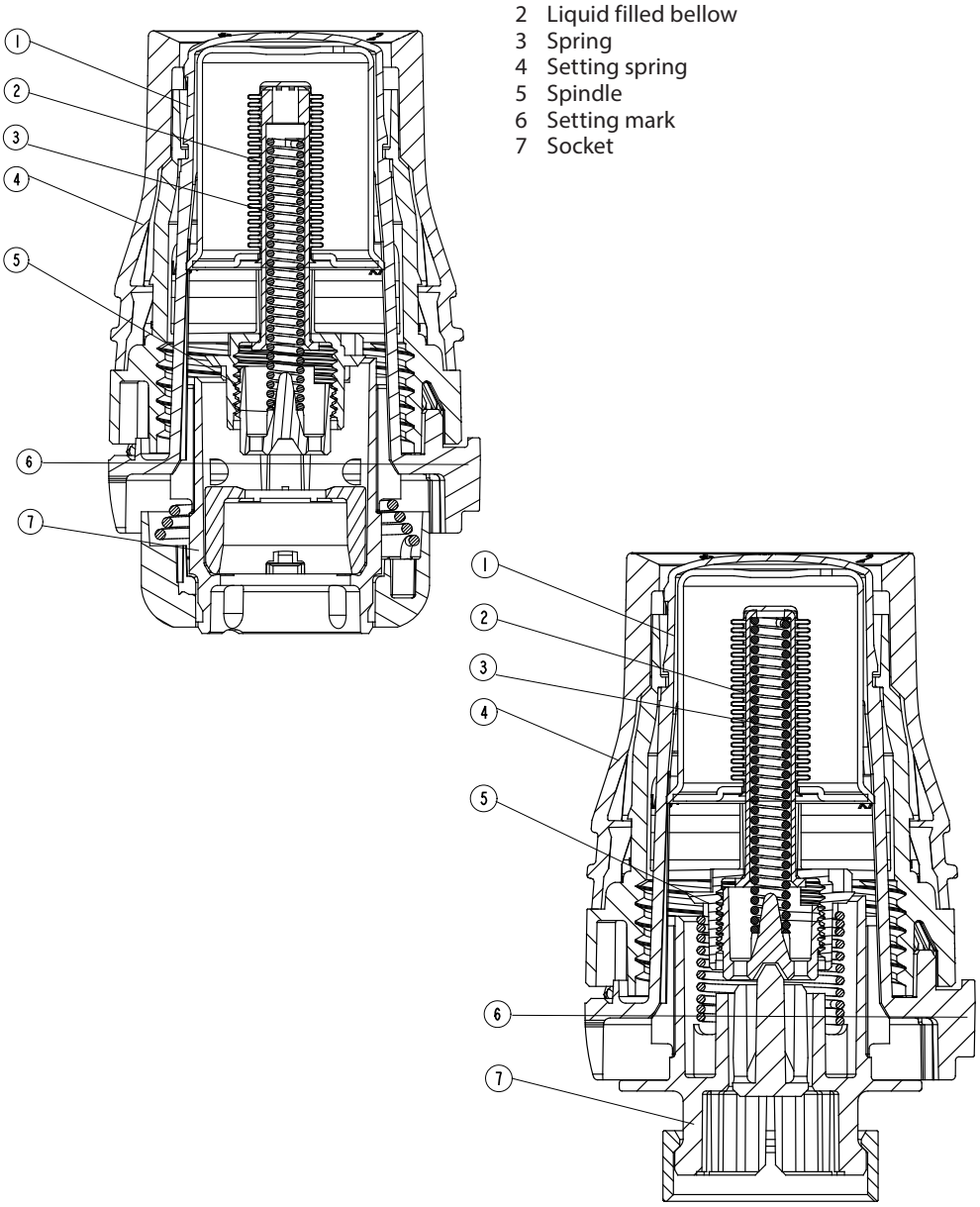

1 Actuator
2 Liquid filled bellow
3 Spring
4 Setting spring
5 Spindle
6 Setting mark
7 Socket

Operating Principle

Thermostatic sensors are proportional controls, regulating the heat supply in relation to the difference between the temperature set on the sensor and the temperature of ambient air, detected by the thermostat.

The thermal expansion element (bellow) responds to room temperature by expanding or contracting proportionally. The movement is transmitted onto the control element of the thermostatic valve.

The thermostatic sensor controls the amount of water which flows into radiator to the suitable flow level that is required to maintain the room temperature on the set level.

Danfoss Redia®series of thermostatic sensors are fitted with liquid-filled bellows, ensuring fast response time to changing ambient temperature.

© Danfoss Climate Solutions | 12.2025 | AI432927896060en-000102

Datasheet HOME series of Danfoss Redia® thermostats

Setting the temperature

The required room temperature is set by turning the setting dial. The temperature scales below shows the correlation between scale values and the room temperature. The temperature values stated are for guidance only as the obtained room temperature will often be influenced by installation conditions.

Locking and limitation of the temperature set-point of the Danfoss Redia® thermostats are carried out using the limiter buttons placed at the side of the sensor.

The procedure is described in the instruction.

Danfoss Redia® RA 015G5120



Setting position

❄	1	2	3	4	5	
8	12	16	20	24	28	°C

Room temperature

❄ = Frost protection setting

Danfoss Redia® M30 015G5121



Setting position

❄	1	2	3	4	5	
8	12	16	20	24	28	°C

Room temperature

❄ = Frost protection setting

Datasheet HOME series of Danfoss Redia® thermostats

Choose the right sensor

The thermostatic sensor should be selected on the basis of the following criteria:

The thermostat must always be able to register the temperature of the ambient air.

Radiator thermostats with built-in sensors
These should always be fitted horizontally so that the ambient air can pass freely over the sensor. Danfoss does not recommend the fitting of a built-in sensor in vertical position because heat effect from the valve body and possibly surface pipes will cause incorrect operation of the thermostat.

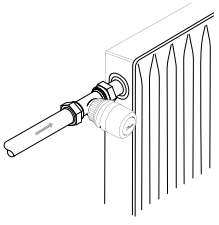

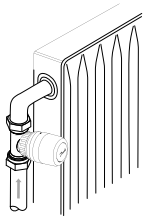

Radiator thermostats with remote sensor
These should be used when:
- Curtains cover the thermostat
- Thermostat is affected by surface pipes
- Thermostat is affected by draught
- It is necessary to mount the thermostat in vertical position if there are adjacent obstructions.

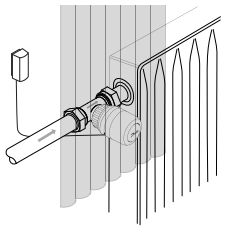

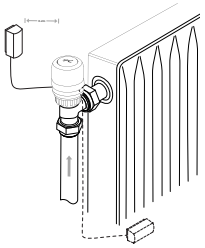

The remote sensor must be mounted on the wall, away from curtains, or on the skirting board beneath the radiator if free of surface pipes.

All remote sensors are now supplied with ultra-thin capillary tube. Simply pull out the length required (2 m maximum) and fix
using clips provided or a special tacker gun.

Dimensions

Danfoss Redia® RA

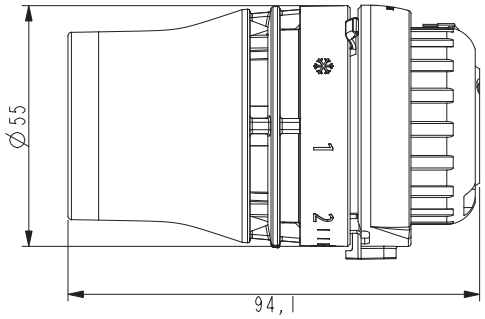

Danfoss Redia® M30

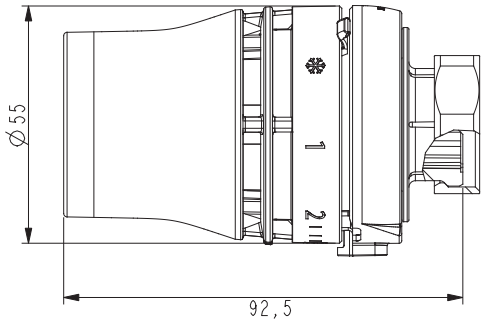

Any information, including, but not limited to information on selection of product, its application or use, product design, weight, dimensions, capacity or any other technical data in product m
catalogues descriptions, advertisements, etc. and whether made available in writing, orally, electronically, online or via download, shall be considered informative, and is only binding if and to
extent, explicit reference is made in a quotation or order confirmation. Danfoss cannot accept any responsibility for possible errors in catalogues, brochures, videos and other material.
Danfoss reserves the right to alter its products without notice. This also applies to products ordered but not delivered provided that such alterations can be made without changes to form, fit o
function of the product.
All trademarks in this material are property of Danfoss A/S or Danfoss group companies. Danfoss and the Danfoss logo are trademarks of Danfoss A/S. All rights reserved.