VACON® NX
AC DRIVES

LIQUID-COOLED DRIVES
USER MANUAL

VACON®

TABLE OF CONTENTS

Document: DPD00887K
Release date: 10/1/25

1. Safety 9
1.1 Safety symbols used in the manual 9
1.2 Danger 10
1.3 Warnings 11
1.4 Grounding and earth fault protection 12
1.5 Running the motor 13
2. EU directive 14
2.1 CE marking 14
2.2 EMC directive 14
2.2.1 General 14
2.2.2 Technical criteria 14
2.2.3 VACON® AC drive EMC classification 14
2.2.4 Explanations of voltage classes 15
3. Receipt of delivery 16
3.1 Type code 16
3.2 Storage and shipping 17
3.3 Maintenance 17
3.3.1 Preventive maintenance recommendations 17
3.3.2 Reforming the capacitors 21
3.4 Warranty 23
4. Technical data 24
4.1 Introduction 24
4.2 Power ratings 27
4.2.1 AC drives 27
4.2.2 Inverter units 33
4.3 Technical data 36
5. Installation 41
5.1 Mounting 41
5.1.1 Lifting the drive 41
5.1.2 VACON® NX Liquid-cooled dimensions 43
5.2 Cooling 56
5.2.1 Safety in liquid-cooling 56
5.2.2 General information on cooling 56
5.2.3 Coolant 57
5.2.4 Cooling system 58
5.2.5 Cooling system connections 61
5.2.6 Condensation 70
5.3 Drive derating 71
5.4 Input chokes 73
5.4.1 Grounding of input chokes 73
5.4.2 Liquid-cooled input chokes 74
5.4.3 Air-cooled input chokes 76
5.4.4 Installation of the input chokes 78
6. Electrical cabling and connections 82
6.1 Power unit 82
6.1.1 Location of the terminals 83
6.1.2 Power connections 89
6.1.3 Drive protection – Fuses 95
6.1.4 Fuse sizes 95

6.1.5 Cable installation instructions ... 101
6.1.6 Supply busbars for inverter units ... 104
6.1.7 Installation space ... 105
6.1.8 Grounding of power unit ... 105
6.1.9 Installation of ferrite rings (option) on the motor cable ... 106
6.1.10 Cable installation and the UL standards ... 106
6.1.11 Cable and motor insulation checks ... 107
6.2 Control unit ... 108
6.2.1 Control board power-up ... 110
6.2.2 Control connections ... 110
6.2.3 Control terminal signals ... 113
6.2.4 Control unit mounting box ... 117
6.3 Internal connections ... 119
6.3.1 Connections between Power Unit ASIC and Driver Boards ... 119
6.3.2 Connections between power unit ASIC and the control unit ... 122
6.3.3 Connections between mains device and inverter power module ... 127
7. Control keypad ... 129
7.1 Indications on the Keypad display ... 129
7.1.1 Drive status indications ... 129
7.1.2 Control place indications ... 130
7.1.3 Status LEDs (green – green – red) ... 130
7.1.4 Text lines ... 130
7.2 Keypad push-buttons ... 131
7.2.1 Button descriptions ... 131
7.3 Navigation on the control keypad ... 132
7.3.1 Monitoring menu (M1) ... 133
7.3.2 Parameter menu (M2) ... 135
7.3.3 Keypad control menu (M3) ... 136
7.3.4 Active faults menu (M4) ... 138
7.3.5 Fault history menu (M5) ... 140
7.3.6 System menu (M6) ... 141
7.3.7 Expander board menu (M7) ... 154
7.4 Further keypad functions ... 155
8. Commissioning ... 156
8.1 Safety ... 156
8.2 Commissioning of the AC drive ... 157
9. Fault tracing ... 159
9.1 Fault codes ... 159
9.2 Load test with motor ... 165
9.3 DC link test (without motor) ... 166
9.4 Error message on control panel display ... 166
10. Active front end (AFE) ... 167
10.1 Introduction ... 167
10.2 Diagrams ... 167
10.2.1 Active Front End block diagram ... 167
10.3 Type code ... 168
10.4 Active Front End unit technical data ... 169
10.5 Power ratings ... 173
10.6 Liquid-Cooled RLC filters ... 175
10.6.1 Introduction ... 175
10.6.2 Wiring diagrams ... 175
10.6.3 Power rating and dimensions ... 176
10.6.4 Technical data ... 178
10.6.5 Removing discharging resistors ... 178

10.6.6 Removing HF capacitors ... 179
10.7 Active front end - fuse selection ... 181
10.7.1 Fuse sizes, Active Front End units (AC supply) ... 182
10.8 Pre-charging circuit ... 184
10.9 Paralleling ... 186
10.10 Common pre-charging circuit ... 187
10.11 Each Active Front End unit has the pre-charging circuit ... 188
11. Non-regenerative front end (NFE) ... 189
11.1 Introduction ... 189
11.2 Diagrams ... 189
11.2.1 Non-regenerative Front End Unit wiring diagrams ... 189
11.3 Installation of the NFE control cables ... 192
11.4 Type codes ... 193
11.5 Power ratings ... 194
11.6 Non-regenerative Front End unit technical data ... 195
11.7 Dimensions ... 197
11.8 Chokes ... 198
11.9 Non-regenerative front end - fuse selection ... 199
11.9.1 Fuse sizes, Non-regenerative Front End units ... 200
11.9.2 Circuit breaker settings, Non-regenerative Front End units ... 200
11.10 Settings ... 200
11.10.1Phase monitor settings ... 200
11.10.2Option board settings ... 201
11.11 DC pre-charging circuit ... 202
11.12 Paralleling ... 203
11.13 Parameters ... 204
11.14 CH60 Liquid-cooled NFE protections ... 209
11.15 Fault codes ... 210
12. Brake chopper unit (BCU) ... 213
12.1 Introduction ... 213
12.2 Type code ... 213
12.3 Diagrams ... 213
12.3.1 NXB Brake Chopper Unit block diagram ... 213
12.3.2 VACON® NXB topologies and connection ... 214
12.4 Brake chopper unit technical data ... 215
12.5 BCU power ratings ... 218
12.5.1 VACON® NXB; DC voltage 460–800 V ... 218
12.5.2 VACON® NXB; DC voltage 640–1100 V ... 219
12.6 VACON® brake resistors and brake chopper dimensioning ... 220
12.6.1 Braking energy and losses ... 220
12.6.2 Braking power and resistance, mains voltage 380–500 V AC/600–800 V DC ... 221
12.6.3 Braking power and resistance, mains voltage 525–690 V AC/840–1100 V DC ... 223
12.7 Brake chopper unit – Fuse selection ... 225
13. Grid converter/Utility interactive inverter ... 227
13.1 Safety ... 227
13.2 Used symbols and markings ... 227
13.3 Type code ... 228
13.4 Conditions of acceptability ... 228
13.4.1 Conditions of acceptability and engineering considerations for UL1741 ... 228
13.5 Required tools ... 229
13.6 Mounting ... 229
13.6.1 Dimensions - Drive unit ... 229
13.6.2 Dimensions - RLC filter ... 229
13.6.3 Enclosure sizes for UL1741 inverters installation ... 229

13.7 Cooling ... 231
13.8 Power cabling ... 231
13.8.1 Cable installation and the UL standards ... 231
13.8.2 Cable sizes - UL1741 ... 232
13.8.3 Terminal sizes ... 232
13.8.4 Bolt sizes and tightening torques ... 232
13.9 Grounding ... 233
13.9.1 Grounding terminal ... 233
13.9.2 GFDI requirements for UL1741 compliant installations ... 233
13.10 Protections ... 233
13.10.1 Overcurrent protection ... 233
13.10.2 Voltage/frequency trip limits ... 240
13.11 Control cabling ... 240
13.12 RLC filter ... 240
13.13 Specifications ... 241
13.13.1 Technical data ... 241
13.13.2 Current and power ratings ... 242
13.13.3 Configuration circuit diagrams ... 245
14. Appendix ... 247
14.1 Circuit diagrams ... 247
14.2 OETL, OFAX, and charging circuit ... 259
14.3 Fuse sizes ... 262
14.4 Power conversion equipment ... 270
14.4.1 Technical data ... 270
14.4.2 Power ratings ... 271

AT LEAST THE FOLLOWING STEPS OF THE START-UP QUICK GUIDE MUST BE PERFORMED DURING THE INSTALLATION AND COMMISSIONING.

IF ANY PROBLEMS OCCUR, CONTACT YOUR LOCAL DISTRIBUTOR.

Start-up Quick Guide

1. Check that the delivery corresponds to your order, see Chapter 3.
2. Before taking any commissioning actions read carefully the safety instructions in Chapter 1.
3. Check the size of the motor cable, mains cable, mains fuses and check the cable connections, read Chapter 6.1.2.1 – Chapter 6.1.3.
4. Follow the installation instructions.
5. Control connections are explained in Chapter 6.2.2.
6. Ensure the adequate pressure and flow of the cooling agent you are using. See Chapter 5.2.
7. If the Start-up wizard is active, select the language of the keypad and the application you want to use and confirm by pressing the Enter button. If the Start-up wizard is not active, follow the instructions 7a and 7b.

7a. Select the language of the keypad from the Menu M6, S6.1. Instructions on using the keypad are given in Chapter 7.

7b. Select the application you want to use from the Menu M6, S6.2. Instructions on using the keypad are given in Chapter 7.

8. All parameters have factory default values. In order to ensure proper operation, check the rating plate data for the values below and the corresponding parameters of parameter group G2.1.
   - nominal voltage of the motor
   - nominal frequency of the motor
   - nominal speed of the motor
   - nominal current of the motor
   - motor cosφ

   All parameters are explained in VACON® NX All-in-One Application Manual.

9. Follow the commissioning instructions, see Chapter 8.
10. The VACON® NX Liquid-cooled AC drive is now ready for use.

Vacon Ltd is not responsible for the use of its products against instructions.

ABOUT THE VACON® NX LIQUID-COOLED AC DRIVES USER MANUAL

Congratulations for choosing the Smooth Control provided by VACON® NX Liquid-cooled drives!

This manual will provide you with the necessary information about the installation, commissioning and operation of VACON® NX Liquid-cooled drives. We recommend that you carefully study these instructions before powering up the AC drive for the first time.

This manual is available in both paper and electronic editions. We recommend you to use the electronic version if possible. If you have the electronic version at your disposal you will be able to benefit from the following features:

The manual contains several links and cross-references to other locations in the manual which makes it easier for the reader to move around in the manual, to check and find things faster.

The manual also contains hyper links to web pages. To visit these web pages through the links you must have an internet browser installed on your computer.

The manual is subject to change without prior notice.

1. SAFETY



ONLY A COMPETENT ELECTRICIAN MAY CARRY OUT THE ELECTRICAL INSTALLATION!

1.1 SAFETY SYMBOLS USED IN THE MANUAL

This manual contains warnings and cautions, which are identified with safety symbols. The warnings and cautions give important information on how to prevent injury and damage to the equipment or your system.

Read the warnings and cautions carefully and obey their instructions.

	**= DANGEROUS VOLTAGE!**
	**= GENERAL WARNING!**

IMPORTANT SAFETY INSTRUCTIONS
SAVE THESE INSTRUCTIONS
You can download the English and French product manuals with applicable safety, warning and caution information from https://www.danfoss.com/en/service-and-support/.

INSTRUCTIONS IMPORTANTES CONCERNANT LA SÉCURITÉ
CONSERVER CES INSTRUCTIONS
Vous pouvez télécharger les versions anglaise et française des manuels produit contenant l'ensemble des informations de sécurité, avertissements et mises en garde applicables sur le site https://www.danfoss.com/en/service-and-support/.

1.2 DANGER



Do not touch the components of the power unit when the drive is connected to mains. The components are live when the drive is connected to mains. A contact with this voltage is very dangerous.



Do not touch the motor cable terminals U, V, W, the brake resistor terminals or the DC terminals when the drive is connected to mains. These terminals are live when the drive is connected to mains, also when the motor does not operate.



Do not touch the control terminals. They can have a dangerous voltage also when the drive is disconnected from mains.



Before you do electrical work on the drive, disconnect the drive from the mains and make sure that the motor has stopped. Lock out and tag out the power source to the drive. Make sure that no external source generates unintended voltage during work. Note that also the load side of the drive can generate voltage.

Wait 5 minutes before you open the cabinet door. Use a measuring device to make sure that there is no voltage. The terminal connections and the components of the drive can be live 5 minutes after it is disconnected from the mains and the motor has stopped.



Before you connect the AC drive to mains, make sure that the coolant circulation functions properly, and check the circulation for possible leaks.



Before you connect the drive to mains, make sure that the front cover and the cable cover of the drive are closed. The connections of the AC drive are live when the drive is connected to mains.



Before connecting the drive to mains make sure that the enclosure door is closed.



Disconnect the motor from the drive if an accidental start can be dangerous. When there is a power-up, a power break or a fault reset, the motor starts immediately if the start signal is active, unless the pulse control for Start/Stop logic is selected. If the parameters, the applications or the software change, the I/O functions (including the start inputs) can change.



Wear protective gloves when you do mounting, cabling or maintenance operations. There can be sharp edges in the AC drive that can cause cuts.

1.3 WARNINGS



Do not move the AC drive. Use a fixed installation to prevent damage to the drive.



Do not make measurements when the AC drive is connected to mains. It can cause damage to the drive.



Make sure that there is reinforced protective ground connection. It is mandatory, because the touch current of the AC drives is more than 3.5 mA AC (refer to EN 61800-5-1). See Chapter 1.4.



Do not use spare parts that are not from the manufacturer. Using other spare parts can cause damage to the drive.



Before you make measurements on the motor or the motor cable, disconnect the motor cable from the AC drive.



Do not lift the AC drive from the plastic handles with an elevating device, such as jib crane or hoist.



Do not touch the components on the circuit boards. Static voltage can cause damage to these components.



Make sure that the EMC level of the AC drive is correct for your mains. Contact your local distributor for instructions. An incorrect EMC level can cause damage to the drive.



Prevent radio interference. The AC drive can cause radio interference in a domestic environment.



AC drives and filters may produce electromagnetic interference up to 300 GHz that may affect the functionality of pacemakers and other implanted medical devices.

NOTE! If you activate the autoreset function, the motor starts automatically after an automatic fault reset. See the Application Manual.

NOTE! If you use the AC drive as a part of a machine, the machine manufacturer must supply a mains disconnection device (refer to EN 60204-1).

1.4 GROUNDING AND EARTH FAULT PROTECTION



The AC drive must always be grounded with a grounding conductor that is connected to the grounding terminal that is identified with the symbol ⏚. Not using a grounding conductor can cause damage to the drive.

The touch current of the drive is more than 3.5 mA AC. The standard EN 61800-5-1 tells that 1 or more of these conditions for the protective circuit must be true.

The connection must be fixed.

a) The protective grounding conductor must have a cross-sectional area of minimum 10 mm^2 Cu or 16 mm^2 Al. OR
b) There must be an automatic disconnection of the mains, if the protective grounding conductor breaks. See Chapter 6. OR
c) There must be a terminal for a second protective grounding conductor in the same cross-sectional area as the first protective grounding conductor.

Table 1. Protective grounding conductor cross-section

Cross-sectional area of the phase conductors (S) [mm^2]	The minimum cross-sectional area of the protective grounding conductor in question [mm^2]
$S \leq 16$	S
$16 < S \leq 35$	16
$35 < S$	S/2

The values of the table are valid only if the protective grounding conductor is made of the same metal as the phase conductors. If this is not so, the cross-sectional area of the protective grounding conductor must be determined in a manner that produces a conductance equivalent to that which results from the application of this table.

The cross-sectional area of each protective grounding conductor that is not a part of the mains cable or the cable enclosure, must be a minimum of:

- 2.5 mm^2 if there is mechanical protection, and
- 4 mm^2 if there is not mechanical protection. If you have cord-connected equipment, make sure that the protective grounding conductor in the cord is the last conductor to be interrupted, if the strain-relief mechanism breaks.

Obey the local regulations on the minimum size of the protective grounding conductor.

NOTE! Because there are high capacitive currents in the AC drive, it is possible that the fault current protective switches do not operate correctly.



If you use a fault protection relay, it must be of at least type B, preferably B+ (according to EN 50178), with a trip level of 300 mA. This is for fire protection, not for touch protection in grounded systems.
The earth fault protection inside the AC drive protects only the AC drive itself against earth faults in the motor or the motor cable. It is not intended for personal safety.



Do not do voltage withstand tests on the AC drive. The manufacturer has already done the tests. Doing voltage withstand tests can cause damage to the drive.

1.5 RUNNING THE MOTOR

Motor run check list



Before you start the motor, check that it is mounted properly and make sure that the machine connected to the motor allows the motor to be started.



Set the maximum motor speed (frequency) on the AC drive according to the motor and the machine connected to it.



Before reversing the motor make sure that this can be done safely.



Make sure that no power correction capacitors are connected to the motor cable.



Make sure that the motor terminals are not connected to mains potential.



Before you use the VACON® NX Liquid-cooled AC drive to control the motor, make sure that liquid-cooling system functions properly.

2. EU DIRECTIVE

2.1 CE MARKING

The CE marking on the product guarantees the free movement of the product within the EEA (European Economic Area).

VACON® NX AC drives carry the CE label as a proof of compliance with the Low Voltage Directive and the Electro Magnetic Compatibility Directive (EMC). The company SGS FIMKO has acted as the Competent Body.

2.2 EMC DIRECTIVE

2.2.1 General

The EMC Directive provides that the electrical apparatus must not excessively disturb the environment it is used in, and, on the other hand, it must have an adequate level of immunity toward other disturbances from the same environment.

The compliance of VACON® NX Liquid-cooled AC drives with the EMC directive is verified with Technical Construction Files (TCF) checked and approved by SGS FIMKO, which is a Competent Body. The Technical Construction Files are used to authenticate the conformity of VACON® AC drives with the Directive because such a large-sized product family is impossible to be tested in a laboratory environment and because the combinations of installation vary greatly.

2.2.2 Technical criteria

Our basic idea was to develop a range of AC drives offering the best possible usability and cost-efficiency. EMC compliance was a major consideration from the outset of the design.

VACON® NX Liquid-Cooled AC drives are marketed throughout the world, a fact which makes the EMC requirements of customers different. As far as the immunity is concerned, all VACON® NX Liquid-cooled AC drives are designed to fulfil even the strictest requirements.

2.2.3 VACON® AC drive EMC classification

VACON® NX Liquid-cooled AC drive and inverter modules delivered from factory fulfil all EMC immunity requirements (standard EN 61800-3).

The basic liquid-cooled modules do not have any inherent emission filtering. If filtering is needed and a certain EMC emission level is required, external RFI filters must be used.

Class N:
The VACON® NX Liquid-cooled drives of this class do not provide EMC emission protection. This kind of drives are mounted in enclosures. External EMC filtering is usually required to fulfil the EMC emission requirements.

Class T:
The T-class AC drives have a smaller earth leakage current and are intended to be used with IT supplies only. If they are used with other supplies no EMC requirements are complied with.

WARNING: This is a product of the restricted sales distribution class according to IEC 61800-3. In a domestic environment this product may cause radio interference in which case the user may be required to take adequate measures.

2.2.4 Explanations of voltage classes

NX_5 = 380 - 500 V AC drives -> DC-link voltage = 465 - 800 V DC

NX_6 = 525 - 690 V AC drives -> DC-link voltage = 640 - 1100 V DC

NX_8 = 525 - 690 V AC drives -> DC-link voltage = 640 - 1200 V DC

2.2.4.1 IT networks

The grounding of input capacitors made by default with the grounding screw at terminal X41 of the bus board in all drives is imperative in all variations of TN/TT networks. Should a drive originally purchased for TN/TT networks be used in an IT network, the screw at X41 must be removed. It is strongly recommended that this be done by Danfoss personnel. Ask you local distributor for more information.

3. RECEIPT OF DELIVERY

The standard delivery of VACON® NX Liquid-cooled AC drives includes all or part of the following components:

- Power unit
- Control unit
- Main line connecting hoses and conduits (1.5 m) + aluminium adapters for CH5-CH74
- Tema 1300 series fast connectors for CH3-CH4
- Choke (not DC-fed inverters, type code I)
- Control unit mounting kit
- Optic fibre & cable set (1.5 m) for control unit; Optic sets in different lengths also available
- Optic fibre cable set for 2*CH64/CH74: 1.8 m/11 fibres (Power module 1) and 3.8 m/8 fibres (Power module 2)

VACON® NX Liquid-cooled AC drives have undergone scrupulous tests and quality checks at the factory before they are delivered to the customer. However, after unpacking the product, check that no signs of transport damages are to be found on the product and that the delivery is complete (compare the type designation of the product to the code).

Should the drive have been damaged during the shipping, contact primarily the cargo insurance company or the carrier.

If the delivery does not correspond to your order, contact the supplier immediately.

3.1 TYPE CODE

The type for the VACON® NX Liquid-cooled drives is presented below.

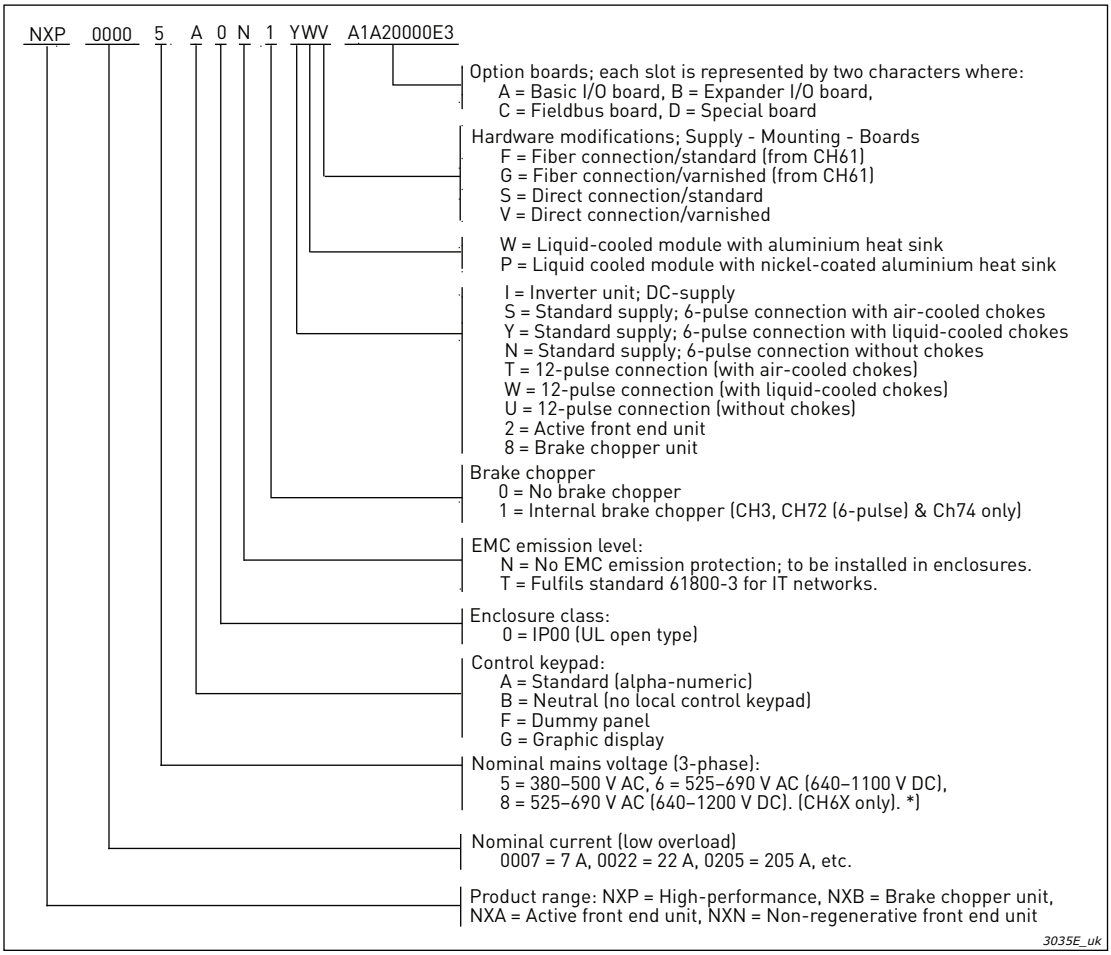

*) Note, the control unit of NX_8 (voltage class 8) drives need to be supplied with a external 24 V DC power source.

3.2 STORAGE AND SHIPPING

If the AC drive is to be kept in store before use make sure that the ambient conditions are acceptable:

Storing temperature –40...+70 °C (no cooling liquid inside cooling element allowed below 0 °C

Relative humidity <96%, no condensation

If the storage time exceeds 12 months the electrolytic DC capacitors need to be charged with caution. Therefore, such a long storage time is not recommended. See Chapter 9.3 and the VACON® NX Liquid-cooled Drives Service Manual for instructions on charging. See also Chapter 3.3.

WARNING: Always remove all cooling agent from the cooling element(s) before shipping to avoid damage caused by freezing.

3.3 MAINTENANCE

3.3.1 PREVENTIVE MAINTENANCE RECOMMENDATIONS

Generally, all technical equipment, including VACON® AC Drives need a minimum level of preventive maintenance. Regular maintenance is recommended to ensure trouble-free operation and long life of the drive. It is also recommended, as a good service practice to record a maintenance log with counter values, date, and time describing the maintenance and service actions.

Danfoss recommends the following inspections and service intervals for liquid-cooled drives/ systems.

NOTE! The service schedule for part replacements may vary depending on operation conditions. Under specific conditions, the combination of stressful operating and environment conditions work together to significantly reduce the lifetime of the components.These conditions can include, for example, extreme temperature, dust, high humidity, hours of use, corrosive environment, and loading.

For operation in stressful conditions, Danfoss offers the DrivePro® Preventive Maintenance service. DrivePro® services extend the lifetime and increase the performance of the product with scheduled maintenance including customized part replacements. DrivePro® services are tailored to your application and operating conditions.

Table 2. Maintenance schedule for liquid-cooled drives

Component	Inspection interval (1)	Service schedule (2)	Preventive maintenance actions
Installation			
Visual drive inspection	1 year	–	Check for the unusual, for example, for signs of overheating, aging, corrosion, and for dusty and damaged components.
Auxiliary equipment	1 year	According to manufacturer recommendations	Inspect equipment, switchgear, relays, disconnects or fuses/circuit breakers. Examine the operation and condition for possible causes of operational faults or defects. The continuity check on fuses is performed by trained service personnel.
EMC consideration	1 year	–	Inspect the installation wiring regarding the electromagnetic capability and the separation distance between control wiring and power cables.

Table 2. Maintenance schedule for liquid-cooled drives

Component	Inspection interval (1)	Service schedule (2)	Preventive maintenance actions
Cable routing	1 year	–	Check for parallel routing of motor cables, mains wiring, and signal wiring. Parallel routing must be avoided. Avoid routing cables through free air without support. Check for aging and wearing of the cable insulation.
Control wiring	1 year	–	Check for tightness, damaged or crimped wires or ribbon wires. The connections should be terminated correctly with solid crimped ends. The use of screened cables and grounded EMC plate, or a twisted pair is recommended.
Proper clearances	1 year	–	Check that the required external clearances for proper air flow for cooling are followed according to the frame designation and drive type. For clearances, refer to the local design regulations.
Seals condition	1 year	–	Check that the seals of the enclosure, the covers, and the cabinet doors are in good condition.
Corrosive environments	1 year	–	Conductive dust, and aggressive gases, such as sulphide, chloride, salt mist, and so on, can damage the electrical and mechanical components. Air filters will not remove air-borne corrosive chemicals. Act based on findings.
Drive			
Programming	1 year	–	Check that the AC drive parameter settings are correct according to the motor, drive application, and I/O configuration. Only trained service personnel may perform this action.
Control panel	1 year	–	Check that the display pixels are intact. Check the event log for warnings, alarms, and faults. Repetitive events are a sign of potential issues. Contact your local service center.
Drive Cooling capacity	1 year	–	Check for blockages or constrictions in the air passages of the cooling channel. The heat sinks must be free of dust and condensation.
Capacitors, DC link	1 year	8–15+ years	The expected lifetime of the capacitors is dependent on the loading profile of the application and the environmental temperature. For applications with heavy loads in demanding environments or high ripple current, replace electrolytic capacitors every 8 years. If within specification of the drive type, replace every 10–15+ years. Only trained service personnel may perform this action.

Table 2. Maintenance schedule for liquid-cooled drives

Component	Inspection interval (1)	Service schedule (2)	Preventive maintenance actions
Cleaning and Filters	1 year	–	The interior of the enclosure should be cleaned annually, and more frequently if necessary. The level of dust in the filter or inside the enclosure is an indicator for when the next cleaning or filter replacement is required.
Fans	1 year	5–10 years	Inspect the condition and operational status of all cooling fans. With the power off, the fan axis should feel tight, and spinning the fan with a finger, the rotation should be almost silent and not have abnormal rotation resistance. When in RUN mode, fan vibration, excessive or strange noise is a sign of the bearings wearing, and the fan should be replaced.
Grounding	1 year	–	The drive system requires a dedicated ground wire connecting the drive, the output filter, and the motor to the building ground. Check that the ground connections are tight and free of paint or oxidation. Daisy-chain connections are not allowed. Braided straps are recommended if applicable.
PCB	1 year	10–12 years	Visually inspect the PCBs for signs of damage or degrading due to aging, corrosive environments, dust, or environments with high temperatures. Only trained service personnel may perform the inspection and service action.
Power cables and wiring	1 year	–	Check for loose connections, aging, insulation condition, and proper torque to the drive connections. Check for proper rating of fuses and continuity check. Observe if there are any signs of operation in a demanding environment. For example, discoloration of the fuse housing may be a sign of condensation or high temperatures.
Vibration	1 year	–	Check for abnormal vibration or noise coming from the drive to ensure that the environment is stable for electronic components.
Insulator gaskets	1 year	10–15 years	Inspect the insulators for signs of degradation due to high temperature and aging. Replacement is based on findings or done at the same time as DC capacitor replacement. Only trained service personnel may perform this action.
Spare parts			

Table 2. Maintenance schedule for liquid-cooled drives

Component	Inspection interval (1)	Service schedule (2)	Preventive maintenance actions
Spare parts	1 year	2 years	Stock spares in their original boxes in a dry and clean environment. Avoid hot storage areas. Electrolytic capacitors require reforming as stated in the service schedule. The reforming is performed by trained service personnel. See Chapter 3.3.2.
Exchange units and units stored for long periods before commissioning	1 year	2 years	Visually inspect for signs of damage, water, high humidity, corrosion, and dust within the visual field of view without disassembly. The exchange units with mounted electrolytic capacitors require reforming as stated in the service schedule. The reforming is performed by trained service personnel. See Chapter 3.3.2.
Coolant			
Log	Commissioning/ start-up, or at time of replacing liquid coolant	–	Record the water quality specification values to create a baseline for future reference before and after adding inhibitor and glycol. Also record the system pressure, coolant flow rate, temperature range, and create a baseline for future reference.
Glycols	1 year	Based on findings	Measure and record the level of glycol in the cooling system. The minimum concentration level is always 75/25% demineralized water/glycol.
Corrosive inhibitors	1 year	Based on findings	Measure and record the level of Danfoss-recommended corrosive inhibitor (Cortec-VpCI-649) in the liquid coolant (see specification). The level of inhibitor should be measured every year. If inhibitor is below the 1% recommended level, practice caution before adding more inhibitor to not exceed the level of electrical conductivity.
Pre-mixed glycol and inhibitor coolant	1 year	Based on findings	The pre-mixed coolants contain specific percentages of glycol and inhibitor for antifreeze and corrosion protection. The advantage of using a pre-mixed coolant is that the chemical composition is within Danfoss specifications, and there is no need for analyzing the coolant.
Demineralized water	1 year	Based on findings	Only use demineralized or deionized water in the coolant solution. Record and compare the chemical composition values when replacing or adding coolant.
Liquid cooling system			

Table 2. Maintenance schedule for liquid-cooled drives

Component	Inspection interval (1)	Service schedule (2)	Preventive maintenance actions
Pipes, hoses, and connections	1 year	1 year	Check for external signs of moisture, corrosion, and coolant leaks. Check the tightness of the cooling pipe connections. Check the heat sinks and host pipes in the cooling system.
Leak detector	1 year	10 years	Test the functioning of the leak detector.
Power unit heat sinks	1 year	6 years	Check that the heat sink temperature across all cooling circuits or power phases is balanced. Imbalanced temperature of the cooling circuits is a possible sign of a restriction. Under normal conditions, the heat sinks should be cleaned or acid-washed every 6 years with Danfoss-recommended cleaning products. Refill the coolant system and log the new coolant specification values.
Auxiliary equipment	1 year	According to manufacturer recommendations	Check that the sensors, gauges, and indicators are functioning correctly. Act based on findings.
System cooling capacity	1 year	Based on findings	Test the cooling capacity and the thermal transfer of the system. Record the coolant system flow, pressure, and input and output temperature, and compare to the previous measurements. Act based on findings.

(1) Defined as the time after the commissioning/start-up or the time from the previous inspection.

(2) Defined as the time after the commissioning/start-up or the time from the previous service schedule actions.

3.3.2 REFORMING THE CAPACITORS

The electrolytic capacitors in the DC link rely on a chemical process to provide the insulator between the two metal plates. This process can degrade over a period of years when the drive has been non-operational (stocked). The result is that the working voltage of the DC link gradually falls.

The correct course of action is to ensure that the insulation layer of the capacitor is 'reformed' by the application of a limited current using a DC supply. Current limiting ensures that the heat generated within the capacitor is kept at a sufficiently low level to prevent any damage.



DANGER! SHOCK HAZARD FROM CAPACITORS

The capacitors can be charged even when disconnected. Contact with this voltage can lead to death or serious injury.

If the AC drive or spare capacitors are intended to be stocked, discharge the capacitors before storage. Use a measuring device to make sure that there is no voltage. If in doubt, contact your Danfoss Drives representative.

Case 1: AC drive which has been non-operational or stocked for over 2 years.

1. Connect the DC supply to L1 and L2 or the B+/B terminals (DC+ to B+, DC- to B-) of the DC-link or directly to the capacitor terminals.
2. Set the current limit maximum to 800 mA.
3. Slowly increase the DC voltage to the nominal DC voltage level of the AC drive (1.35*Un AC).
4. Start to reform the capacitors. The time of reforming depends on the time of storage. See Figure 1.

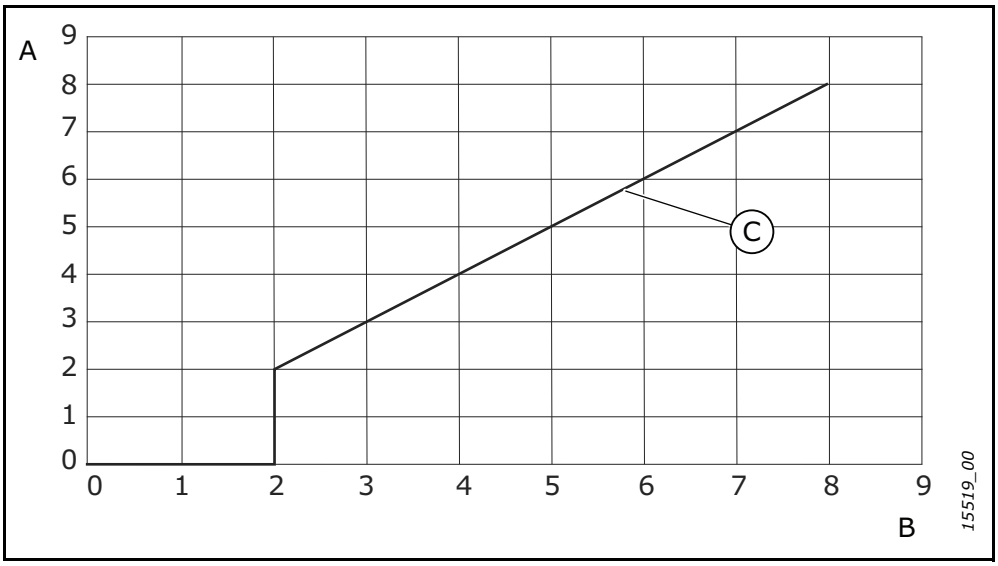

Figure 1. Storage Time and Reforming Time

A = Storage time (years) B = Reforming time (hours) C = Reforming time

5. After the reforming operation is done, discharge the capacitors.

Case 2: Spare capacitor which has been stocked for over 2 years.

1. Connect the DC supply to the DC+/DC- terminals.
2. Set the current limit maximum to 800 mA.
3. Slowly increase the DC voltage to the capacitor nominal voltage level. See information from component or service documentation.
4. Start to reform the capacitors. The time of reforming depends on the time of storage. See Figure 1.
5. After the reforming operation is done, discharge the capacitors.

3.4 WARRANTY

Only manufacturing defects are covered by the warranty. The manufacturer assumes no responsibility for damages caused during or resulting from transport, receipt of the delivery, installation, commissioning or use.

The manufacturer shall in no event and under no circumstances be held responsible for damages and failures resulting from misuse, wrong installation, unacceptable ambient temperature, running motor with lower coolant flow than minimum flow, condensation, dust, corrosive substances or operation outside the rated specifications.

Neither can the manufacturer be held responsible for consequential damages.

NOTE! VACON® NX Liquid-cooled drives must not be run with the liquid cooling system disconnected. Furthermore, the requirements of the liquid cooling specifications, e.g. minimum flow rate (see Chapter 5.2 and Table 13) must be satisfied. Ignoring this will render the warranty null and void.

NOTE! VACON® NX Liquid-cooled NX_8 inverter unit must be equipped with a dU/dt or sine filter. The warranty is void in case filter are not used with these units.

The Manufacturer's time of warranty, if not otherwise agreed, is 18 months from the delivery or 12 months from the commissioning whichever expires first.

The local distributor may grant a warranty time different from the above. This warranty time shall be specified in the distributor's sales and warranty terms. Vacon Ltd assumes no responsibility for any other warranties than that granted by Vacon itself.

In all matters concerning the warranty, contact first your distributor.

4. TECHNICAL DATA

4.1 INTRODUCTION

The VACON® NX Liquid-cooled product range consists of active front ends, inverters, brake choppers and AC drives. Figure 2 and Figure 3 presents the block diagram of the VACON® NX Liquid-cooled inverter and AC drive. Mechanically, the product consists of two units, the Power Unit and the Control Unit. The power unit can contain one to six modules (cooling plates), depending on the drive size. Instead of air, VACON® NX Liquid-cooled inverters and AC drives use liquid for cooling. A charging circuit is embodied in the AC drives but not in active front ends, inverters or brake choppers.

An external three-phase AC-choke (1) at the mains input together with the DC-link capacitor (2) form an LC-filter. In AC drives, the LC-filter together with the diode bridge produce the DC-voltage supply to the IGBT Inverter Bridge (3) block. The AC-choke also functions as a filter against High Frequency disturbances from the mains as well as against those caused by the AC drive to the mains. In addition, it enhances the waveform of the input current to the AC drive. In drives with multiple parallel line-rectifiers (CH74), AC-chokes are required to balance the line current between the rectifiers.

The power drawn by the AC drive from the mains is mostly active power.

The IGBT Inverter Bridge produces a symmetrical, 3-phase Pulse Width Modulated AC-voltage to the motor.

The Motor and Application Control Block is based on microprocessor software. The microprocessor controls the motor basing on the information it receives through measurements, parameter settings, control I/O and control keypad. The motor and application control block controls the motor control ASIC which, in turn, calculates the IGBT positions. Gate drivers amplify these signals for driving the IGBT inverter bridge.

The control keypad constitutes a link between the user and the AC drive. The control keypad is used for parameter setting, reading status data and giving control commands. It is detachable and can be operated externally and connected via a cable to the AC drive. Instead of the control keypad, a PC can also be used to control the AC drive if connected through a similar cable (±12 V).

You can have your AC drive equipped with a control I/O board which is either isolated (OPT-A8) or not isolated (OPT-A1) from the frame. Optional I/O expander boards that increase the number of inputs and outputs to be used are also available. For closer information, contact the Manufacturer or your nearest distributor.

The basic control interface and the parameters (the Basic Application) are easy to use. If a more versatile interface or parameters are required, a more suitable application can be chosen from the "All-in-One" Application Package. See VACON® NX All in One Application Manual for more information on the different applications.

An internal brake chopper is available as standard for chassis CH3. For Ch72 (only 6-pulse) and Ch74, it is available as internal option while in all other sizes the brake chopper is available as option and installed externally. The standard product does not include a brake resistor. It should be acquired separately.

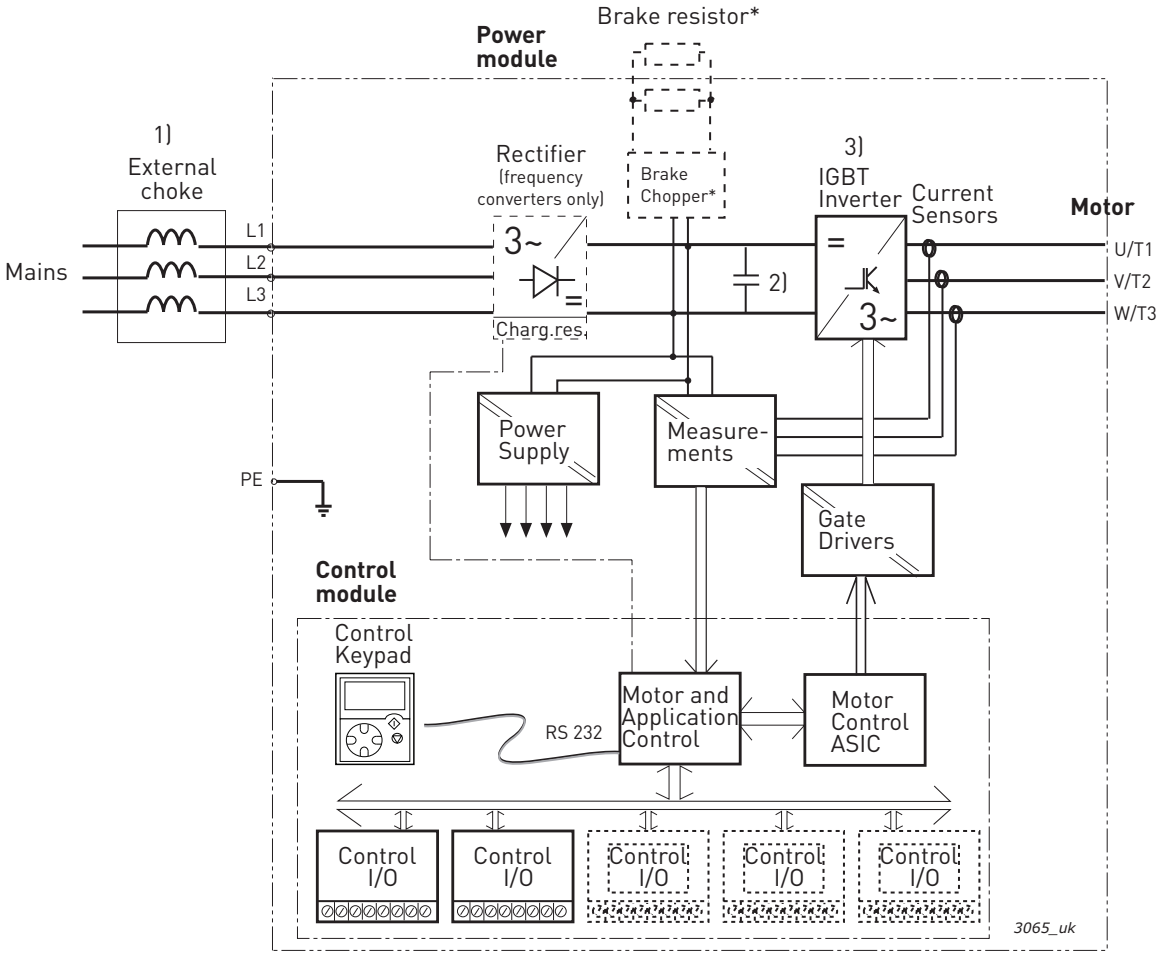

*Brake resistor is available for all sizes (CH3 to CH7). An internal brake chopper belongs to standard equipment in sizes CH3. For CH72 (only 6-pulse) and CH74, it is available as internal option while in all other sizes it is optional but installed externally.

Figure 2. VACON® NX Liquid-cooled AC drive principal block diagram

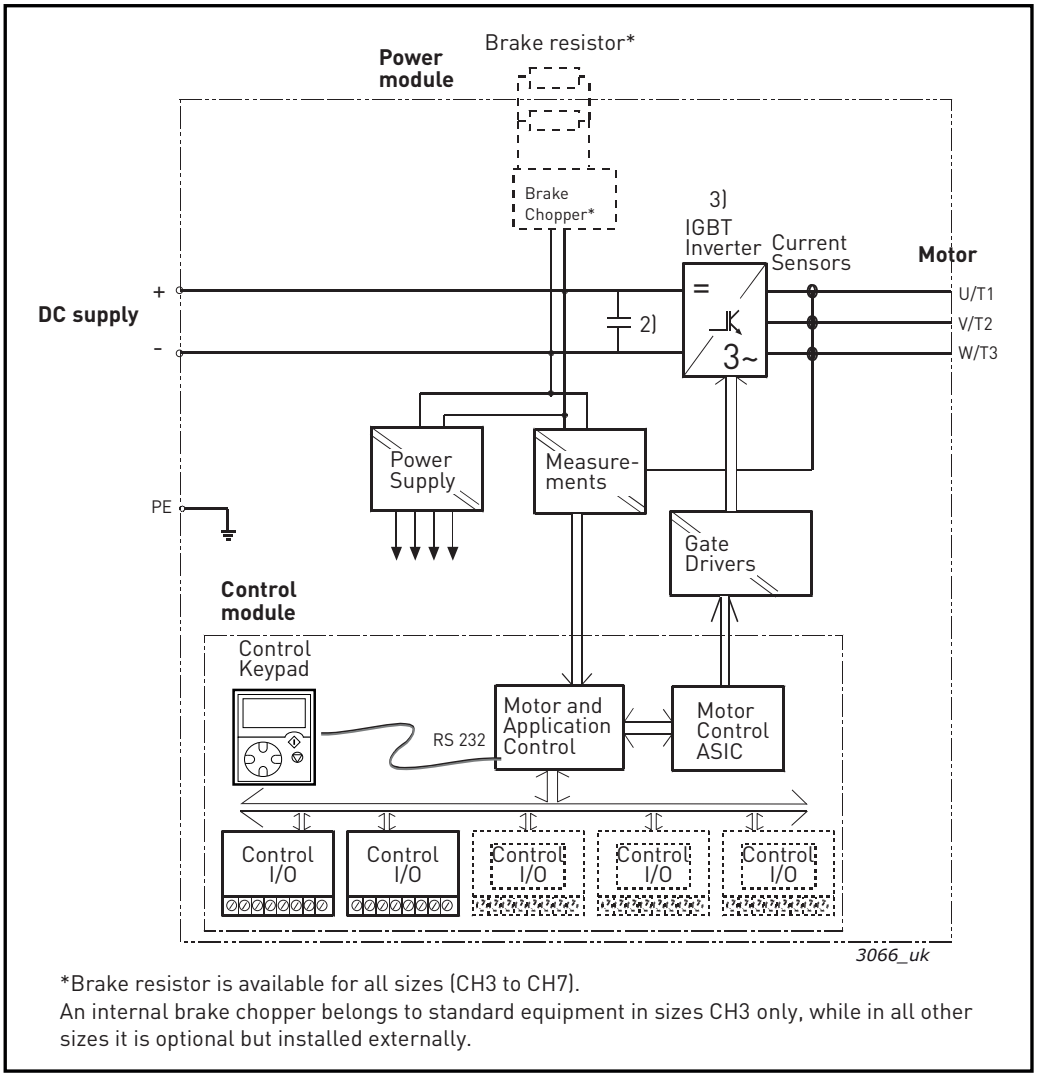

*Brake resistor is available for all sizes (CH3 to CH7).
An internal brake chopper belongs to standard equipment in sizes CH3 only, while in all other sizes it is optional but installed externally.

Figure 3. VACON® NX Liquid-cooled inverter principal block diagram

4.2 POWER RATINGS

VACON® Liquid-cooled product range consists of both AC drives (AC input, AC output) and inverter units (DC input, AC output). The following tables present the drive output values for both and an indication of motor shaft power at I_{th} and I_L at different mains voltages as well as the drive losses and mechanical sizes. The power achieved is given as per the supply voltage.

4.2.1 AC DRIVES

4.2.1.1 VACON® NX Liquid-cooled AC drive – Mains voltage 400—500 V AC

Table 3. Power ratings of VACON® NX Liquid-cooled AC drive (6-pulse), supply voltage 400-500 V AC

Mains voltage 400-500 V AC, 50/60 Hz, 3~, 6-pulse drives							
AC drive type	Drive output					Power loss c/a/T*) [kW]	Chassis
	Current			Motor output power			
	Thermal I_{th} [A]	Rated cont. I_L [A]	Rated cont. I_H [A]	Optimum motor at I_{th} (400 V) [kW]	Optimum motor at I_{th} (500 V) [kW]		
0016_5	16	15	11	7.5	11	0.4/0.2/0.6	CH3
0022_5	22	20	15	11	15	0.5/0.2/0.7	CH3
0031_5	31	28	21	15	18.5	0.7/0.2/0.9	CH3
0038_5	38	35	25	18.5	22	0.8/0.2/1.0	CH3
0045_5	45	41	30	22	30	1.0/0.3/1.3	CH3
0061_5	61	55	41	30	37	1.3/0.3/1.5	CH3
0072_5	72	65	48	37	45	1.2/0.3/1.5	CH4
0087_5	87	79	58	45	55	1.5/0.3/1.8	CH4
0105_5	105	95	70	55	75	1.8/0.3/2.1	CH4
0140_5	140	127	93	75	90	2.3/0.3/2.6	CH4
0168_5	168	153	112	90	110	4.0/0.4/4.4	CH5
0205_5	205	186	137	110	132	5.0/0.5/5.5	CH5
0261_5	261	237	174	132	160	6.0/0.5/6.5	CH5
0300_5	300	273	200	160	200	4.5/0.5/5.0	CH61
0385_5	385	350	257	200	250	6.0/0.5/6.5	CH61
0460_5	460	418	307	250	315	6.5/0.5/7.0	CH72
0520_5	520	473	347	250	355	7.5/0.6/8.1	CH72
0590_5	590	536	393	315	400	9.0/0.7/9.7	CH72
0650_5	650	591	433	355	450	10.0/0.7/10.7	CH72
0730_5	730	664	487	400	500	12.0/0.8/12.8	CH72
0820_5	820	745	547	450	560	12.5/0.8/13.3	CH63
0920_5	920	836	613	500	600	14.4/0.9/15.3	CH63
1030_5	1030	936	687	560	700	16.5/1.0/17.5	CH63
1150_5	1150	1045	766	600	750	18.5/1.2/19.7	CH63
1370_5	1370	1245	913	700	900	19.0/1.2/20.2	CH74
1640_5	1640	1491	1093	900	1100	24.0/1.4/25.4	CH74
2060_5	2060	1873	1373	1100	1400	32.5/1.8/34.3	CH74
2300_5	2300	2091	1533	1250	1500	36.3/2.0/38.3	CH74

Table 3. Power ratings of VACON® NX Liquid-cooled AC drive (6-pulse), supply voltage 400-500 V AC

Mains voltage 400-500 V AC, 50/60 Hz, 3~, 6-pulse drives							
2470_5	2470	2245	1647	1300	1600	38.8/2.2/41.0	2*CH74
2950_5	2950	2681	1967	1550	1950	46.3/2.6/48.9	2*CH74
3710_5	3710	3372	2473	1950	2450	58.2/3.0/61.2	2*CH74
4140_5	4140	3763	2760	2150	2700	65.0/3.6/68.6	2*CH74

Table 4. Power ratings of VACON® NX Liquid-cooled AC drive (12-pulse), supply voltage 400-500 V AC

Mains voltage 400-500 VAC, 50/60 Hz, 3~, 12-pulse drives							
AC drive type	Drive output					Power loss c/a/T*) [kW]	Chassis
	Current			Motor output power			
	Thermal I_{th} [A]	Rated cont. I_L [A]	Rated cont. I_H [A]	Optimum motor at I_{th} (400 V) [kW]	Optimum motor at I_{th} (500 V) [kW]		
0460_5	460	418	307	250	315	6.5/0.5/7.0	CH72
0520_5	520	473	347	250	355	7.5/0.6/8.1	CH72
0590_5	590	536	393	315	400	9.0/0.7/9.7	CH72
0650_5	650	591	433	355	400	10.0/0.7/10.7	CH72
0730_5	730	664	487	400	450	12.0/0.8/12.8	CH72
1370_5	1370	1245	913	700	900	19.0/1.2/20.2	CH74
1640_5	1640	1491	1093	850	1050	24.0/1.4/25.4	CH74
2060_5	2060	1873	1373	1050	1350	32.5/1.8/34.3	CH74
2470_5	2470	2245	1647	1300	1600	38.8/2.2/41.0	2*CH74
2950_5	2950	2681	1967	1550	1950	46.3/2.6/48.9	2*CH74
3710_5	3710	3372	2473	1950	2450	58.2/3.0/61.2	2*CH74
4140_5	4140	3763	2760	2150	2700	65.0/3.6/68.6	2*CH74

I_{th} = Thermal maximum continuous RMS current. Dimensioning can be done according to this current if the process does not require any overloadability or the process does not include any load variation or margin for overloadability.
I_L = Low overloadability current. Allows +10% load variation. 10% exceeding can be continuous.

I_H = High overloadability current. Allows +50% load variation. 50% exceeding can be continuous.

All values with cosφ = 0.83 and efficiency = 97%.

*) c = power loss into coolant; a = power loss into air; T = total power loss; power losses of input chokes not included. All power losses obtained using max. supply voltage, I_{th} and switching frequency of 3.6 kHz and Closed Loop control mode. All power losses are worst case losses.

If some other mains voltage is used, apply the formula P = $\sqrt{3}$ x Un x In x cosφ x eff% to calculate the VACON® NX Liquid-cooled drive output power.

The enclosure class for all VACON® NX Liquid-cooled AC drives is IP00 (UL open type).

If the motor is continuously (besides start and stop ramps) run at frequencies below 5 Hz, pay attention to the drive dimensioning for low frequencies, i.e. maximum $I_H = 0.66*I_{th}$ or choose drive according to I_H. It is recommended to check the rating with your nearest distributor.

Drive overrating may also be necessary if the process requires high starting torque.

Table 5. Internal brake chopper unit (BCU) ratings, braking voltage 640—800 V DC

Internal brake chopper ratings, braking voltage 640-800 V DC						
AC drive type	Loadability	Braking capacity at 600 V DC		Braking capacity at 800 V DC		Chassis
	Rated min. resistance [Ω]	Rated cont. braking power [kW]	BCU rated cont. braking current, I_{br} [A]	Rated cont. braking power R at 800 V DC [kW]	BCU rated cont. braking current, I_{br} [A]	
NX_460 5 [1)]	1.3	276	461	492	615	CH72
NX_520 5 [1)]	1.3	276	461	492	615	CH72
NX_590 5 [1)]	1.3	276	461	492	615	CH72
NX_650 5 [1)]	1.3	276	461	492	615	CH72
NX_730 5 [1)]	1.3	276	461	492	615	CH72
NX_1370 5	1.3	276	461	492	615	CH74
NX_1640 5	1.3	276	461	492	615	CH74
NX_2060 5	1.3	276	461	492	615	CH74
NX_2300 5	1.3	276	461	492	615	CH74

NOTE! Braking power: $P_{brake} = U_{brake}$^2 / R_{brake}

NOTE! Braking DC current: $I_{in\_max} = P_{brake\_max} / U_{brake}$

[1)] Only 6-pulse drives

The internal brake chopper can also be used in motor application where 2...4 x Ch7x drives are used for a single motor, but in this case the DC connections of the power modules must be connected together. The break choppers are working independently of each other and because of this the DC connections must be connected together otherwise there can be unbalance between the power modules.

4.2.1.2 VACON® NX Liquid-cooled AC drive – Mains voltage 525—690 V AC

Table 6. Power ratings of VACON® NX Liquid-cooled AC drive (6-pulse), supply voltage 525—690 V AC

Mains voltage 525-690 V AC, 50/60 Hz, 3~, 6-pulse drives							
AC drive type	Drive output					Power loss c/a/T*) [kW]	Chassis
	Current			Motor output power			
	Thermal I_{th} [A]	Rated cont. I_L [A]	Rated cont. I_H [A]	Optimum motor at I_{th} (525 V) [kW]	Optimum motor at I_{th} (690 V) [kW]		
0170_6	170	155	113	110	160	4.0/0.2/4.2	CH61
0208_6	208	189	139	132	200	4.8/0.3/5.1	CH61
0261_6	261	237	174	160	250	6.3/0.3/6.6	CH61
0325_6	325	295	217	200	300	7.2/0.4/7.6	CH72
0385_6	385	350	257	250	355	8.5/0.5/9.0	CH72
0416_6	416	378	277	250	355	9.1/0.5/9.6	CH72
0460_6	460	418	307	300	400	10.0/0.5/10.5	CH72
0502_6	502	456	335	355	450	11.2/0.6/11.8	CH72
0590_6	590	536	393	400	560	12.4/0.7/13.1	CH63
0650_6	650	591	433	450	600	14.2/0.8/15.0	CH63
0750_6	750	682	500	500	700	16.4/0.9/17.3	CH63
0820_6	820	745	547	560	800	17.3/1.0/18.3	CH74
0920_6	920	836	613	650	850	19.4/1.1/20.5	CH74
1030_6	1030	936	687	700	1000	21.6/1.2/22.8	CH74
1180_6	1180	1073	787	800	1100	25.0/1.3/26.3	CH74
1300_6	1300	1182	867	900	1200	27.3/1.5/28.8	CH74
1500_6	1500	1364	1000	1050	1400	32.1/1.7/33.8	CH74
1700_6	1700	1545	1133	1150	1550	36.5/1.9/38.4	CH74
1850_6	1850	1682	1233	1250	1650	39.0/2.0/41.0	2*CH74
2120_6	2120	1927	1413	1450	1900	44.9/2.4/47.3	2*CH74
2340_6	2340	2127	1560	1600	2100	49.2/2.6/51.8	2*CH74
2700_6	2700	2455	1800	1850	2450	57.7/3.1/60.8	2*CH74
3100_6	3100	2818	2066	2150	2800	65.7/3.4/69.1	2*CH74

Table 7. Power ratings of VACON® NX Liquid-cooled AC drive (12-pulse), supply voltage 525—690 V AC

Mains voltage 525-690 V AC, 50/60 Hz, 3~, 12-pulse drives							
AC drive type	Drive output					Power loss c/a/T*) [kW]	Chassis
	Current			Motor output power			
	Thermal I_{th} [A]	Rated cont. I_L [A]	Rated cont. I_H [A]	Optimum motor at I_{th} (525 V) [kW]	Optimum motor at I_{th} (690 V) [kW]		
0325_6	325	295	217	200	250	7.2/0.4/7.6	CH72
0385_6	385	350	257	250	355	8.5/0.5/9.0	CH72
0416_6	416	378	277	250	355	9.1/0.5/9.6	CH72

Table 7. Power ratings of VACON® NX Liquid-cooled AC drive (12-pulse), supply voltage 525—690 V AC

Mains voltage 525-690 V AC, 50/60 Hz, 3~, 12-pulse drives							
0460_6	460	418	307	315	400	10.0/0.5/10.5	CH72
0502_6	502	456	335	355	450	11.2/0.6/11.8	CH72
0820_6	820	745	547	600	750	17.3/1.0/18.3	CH74
0920_6	920	836	613	650	850	19.4/1.1/20.5	CH74
1030_6	1030	936	687	750	950	21.6/1.2/22.8	CH74
1180_6	1180	1073	787	800	1100	25.0/1.3/26.3	CH74
1300_6	1300	1182	867	950	1200	27.3/1.5/28.8	CH74
1500_6	1500	1364	1000	1050	1400	32.1/1.7/33.8	CH74
1700_6	1700	1545	1133	1150	1550	36.5/1.9/38.4	Ch74
1850_6	1850	1682	1233	1250	1650	39.0/2.0/41.0	2*CH74
2120_6	2120	1927	1413	1450	1900	44.9/2.4/47.3	2*CH74
2340_6	2340	2127	1560	1600	2100	49.2/2.6/51.8	2*CH74
2700_6	2700	2455	1800	1850	2450	57.7/3.1/60.8	2*CH74
3100_6	3100	2818	2067	2150	2800	65.7/3.4/69.1	2*CH74

I_{th} = Thermal maximum continuous RMS current. Dimensioning can be done according to this current if the process does not require any overloadability or the process does not include any load variation.

I_L = Low overloadability current. Allows +10% load variation. 10% exceeding can be continuous.

I_H = High overloadability current. Allows +50% load variation. 50% exceeding can be continuous.

All values with cosφ = 0.83 and efficiency = 97%.

*) c = power loss into coolant; a = power loss into air; T = total power loss; power losses of input chokes not included. All power losses obtained using maximum supply voltage, I_{th} and switching frequency of 3.6 kHz and Closed Loop control mode. All power losses are worst case losses.

If some other mains voltage is used, apply the formula P = $\sqrt{3}$ x Un x In x cosφ x eff% to calculate the VACON® NX Liquid-Cooled drive output power.

The enclosure class for all VACON® NX Liquid-cooled AC drives is IP00 (UL open type).

If the motor is continuously (besides start and stop ramps) run at frequencies below 5 Hz, pay attention to the drive dimensioning for low frequencies, i.e. maximum $I_H = 0.66*I_{th}$ or choose drive according to I_H. It is recommended to check the rating with your nearest distributor.

Drive overrating may also be necessary if the process requires high starting torque.

Table 8. Internal brake chopper unit (BCU) ratings, braking voltage 840—1100 V DC

Internal brake chopper ratings, braking voltage 840-1100 V DC						
AC drive Type	Loadability	Braking capacity at 840 V DC		Braking capacity at 1100 V DC		Chassis
	Rated min. resistance [Ω]	Rated cont. braking power [kW]	BCU rated cont. braking current, I_{br} [A]	Rated cont. braking power [kW]	BCU rated cont. braking current, I_{br} [A]	
NX_325 6 [1)]	2.8	252	300	432	392	Ch72
NX_385 6 [1)]	2.8	252	300	432	392	Ch72
NX_416 6 [1)]	2.8	252	300	432	392	Ch72
NX_460 6 [1)]	2.8	252	300	432	392	Ch72

Table 8. Internal brake chopper unit (BCU) ratings, braking voltage 840—1100 V DC

Internal brake chopper ratings, braking voltage 840-1100 V DC						
NX_502 6 [1)]	2.8	252	300	432	392	Ch72
NX_820 6	2.8	252	300	432	392	Ch74
NX_920 6	2.8	252	300	432	392	Ch74
NX_1030 6	2.8	252	300	432	392	Ch74
NX_1180 6	2.8	252	300	432	392	Ch74
NX_1300 6	2.8	252	300	432	392	Ch74
NX_1500 6	2.8	252	300	432	392	Ch74
NX_1700 6	2.8	252	300	432	392	Ch74

NOTE! Braking power: $P_{brake} = U_{brake}$^2 / R_{brake}

NOTE! Braking DC current: $I_{in\_max} = P_{brake\_max} / U_{brake}$

1) Only 6-pulse drives

The internal brake chopper can also be used in motor application where 2...4 x Ch7x drives are used for a single motor, but in this case the DC connections of the power modules must be connected together. The break choppers are working independently of each other and because of this the DC connections must be connected together otherwise there can be unbalance between the power modules.

4.2.2 INVERTER UNITS

4.2.2.1 VACON® NX Liquid-cooled Inverter Unit – Mains voltage 465—800 V DC

Table 9. Power ratings of VACON® NX Liquid-Cooled inverter unit, supply voltage 540—675 V DC

Mains voltage 465-800 VDC							
AC drive type	Drive output					Power loss c/a/T*) [kW]	Chassis
	Current			Motor output power			
	Thermal I_{th} [A]	Rated cont. I_L [A]	Rated cont. I_H [A]	Optimum motor at I_{th} (540 V DC) [kW]	Optimum motor at I_{th} (675 V DC) [kW]		
0016_5	16	15	11	7.5	11	0.4/0.2/0.6	CH3
0022_5	22	20	15	11	15	0.5/0.2/0.7	CH3
0031_5	31	28	21	15	18.5	0.7/0.2/0.9	CH3
0038_5	38	35	25	18.5	22	0.8/0.2/1.0	CH3
0045_5	45	41	30	22	30	1.0/0.3/1.3	CH3
0061_5	61	55	41	30	37	1.3/0.3/1.5	CH3
0072_5	72	65	48	37	45	1.2/0.3/1.5	CH4
0087_5	87	79	58	45	55	1.5/0.3/1.8	CH4
0105_5	105	95	70	55	75	1.8/0.3/2.1	CH4
0140_5	140	127	93	75	90	2.3/0.3/2.6	CH4
0168_5	168	153	112	90	110	2.5/0.3/2.8	CH5
0205_5	205	186	137	110	132	3.0/0.4/3.4	CH5
0261_5	261	237	174	132	160	4.0/0.4/4.4	CH5
0300_5	300	273	200	160	200	4.5/0.4/4.9	CH61
0385_5	385	350	257	200	250	5.5/0.5/6.0	CH61
0460_5	460	418	307	250	315	5.5/0.5/6.0	CH62
0520_5	520	473	347	250	355	6.5/0.5/7.0	CH62
0590_5	590	536	393	315	400	7.5/0.6/8.1	CH62
0650_5	650	591	433	355	450	8.5/0.6/9.1	CH62
0730_5	730	664	487	400	500	10.0/0.7/10.7	CH62
0820_5	820	745	547	450	560	12.5/0.8/13.3	CH63
0920_5	920	836	613	500	600	14.4/0.9/15.3	CH63
1030_5	1030	936	687	560	700	16.5/1.0/17.5	CH63
1150_5	1150	1045	766	600	750	18.4/1.1/19.5	CH63
1370_5	1370	1245	913	700	900	15.5/1.0/16.5	CH64
1640_5	1640	1491	1093	900	1100	19.5/1.2/20.7	CH64
2060_5	2060	1873	1373	1100	1400	26.5/1.5/28.0	CH64
2300_5	2300	2091	1533	1250	1500	29.6/1.7/31.3	CH64
2470_5	2470	2245	1647	1300	1600	36.0/2.0/38.0	2*CH64
2950_5	2950	2681	1967	1550	1950	39.0/2.4/41.4	2*CH64
3710_5	3710	3372	2473	1950	2450	48.0/2.7/50.7	2*CH64
4140_5	4140	3763	2760	2150	2700	53.0/3.0/56.0	2*CH64

I_{th} = Thermal maximum continuous RMS current. Dimensioning can be done according to this current if the process does not require any overloadability or the process does not include any load variation.

I_L = Low overloadability current. Allows +10% load variation. 10% exceeding can be continuous.

I_H = High overloadability current. Allows +50% load variation. 50% exceeding can be continuous.

All values with cosφ = 0.83 and efficiency = 97%.

*) c = power loss into coolant; a = power loss into air; T = total power loss.

All power losses obtained using max. supply voltage, I_{th} and switching frequency of 3.6 kHz and Closed Loop control mode. All power losses are worst case losses.

If some other mains voltage is used, apply the formula DC P = (U_{DC}/1.35)* $\sqrt{3}$ *In*cosφ*eff% to calculate the VACON® NX Liquid-cooled drive electrical output power.

If the motor is continuously (besides start and stop ramps) run at frequencies below 5 Hz, pay attention to the drive dimensioning for low frequencies, i.e. maximum $I_H = 0.66*I_{th}$ or choose drive according to I_H. It is recommended to check the rating with your nearest distributor.

Drive overrating may also be necessary if the process requires high starting torque.

The voltage classes for the inverter units used in the tables above have been defined as follows:

Input 540 V DC = Rectified 400 V AC supply

Input 675 V DC = Rectified 500 V AC supply

The enclosure class of all inverter units is IP00 (UL open type).

4.2.2.2 VACON® NX Liquid-cooled Inverter Unit – Mains voltage 640—1100 V DC

Table 10. Power ratings of VACON® NX Liquid-cooled inverter unit, supply voltage 710—930 V DC

Mains voltage 640-1100 V DC*)							
Inverter type	Drive output					Power loss c/a/T*) [kW]	Chassis
	Current			Motor output power			
	Thermal I_{th} [A]	Rated cont. I_L [A]	Rated cont. I_H [A]	Optimum motor at I_{th} (710 V DC) [kW]	Optimum motor at I_{th} (930 V DC) [kW]		
0170_6	170	155	113	110	160	3.6/0.2/3.8	CH61
0208_6	208	189	139	132	200	4.3/0.3/4.6	CH61
0261_6	261	237	174	160	250	5.4/0.3/5.7	CH61
0325_6	325	295	217	200	300	6.5/0.3/6.8	CH62
0385_6	385	350	257	250	355	7.5/0.4/7.9	CH62
0416_6	416	378	277	250	355	8.0/0.4/8.4	CH62
0460_6	460	418	307	300	400	8.7/0.4/9.1	CH62
0502_6	502	456	335	355	450	9.8/0.5/10.3	CH62
0590_6	590	536	393	400	560	10.9/0.6/11.5	CH63
0650_6	650	591	433	450	600	12.4/0.7/13.1	CH63
0750_6	750	682	500	500	700	14.4/0.8/15.2	CH63
0820_6	820	745	547	560	800	15.4/0.8/16.2	CH64
0920_6	920	836	613	650	850	17.2/0.9/18.1	CH64
1030_6	1030	936	687	700	1000	19.0/1.0/20.0	CH64
1180_6	1180	1073	787	800	1100	21.0/1.1/22.1	CH64
1300_6	1300	1182	867	900	1200	24.0/1.3/25.3	CH64
1500_6	1500	1364	1000	1050	1400	28.0/1.5/29.5	CH64
1700_6	1700	1545	1133	1150	1550	32.1/1.7/33.8	CH64

Table 10. Power ratings of VACON® NX Liquid-cooled inverter unit, supply voltage 710—930 V DC

Mains voltage 640-1100 V DC*)							
1850_6	1850	1682	1233	1250	1650	34.2/1.8/36.0	2*CH64
2120_6	2120	1927	1413	1450	1900	37.8/2.0/39.8	2*CH64
2340_6	2340	2127	1560	1600	2100	43.2/2.3/45.5	2*CH64
2700_6	2700	2455	1800	1850	2450	50.4/2.7/53.1	2*CH64
3100_6	3100	2818	2066	2150	2800	57.7/3.1/60.8	2*CH64

*) Mains voltage 640-1200 V DC for NX_8 inverter units

I_{th} = Thermal maximum continuous RMS current. Dimensioning can be done according to this current if the process does not require any overloadability or the process does not include any load variation.

I_L = Low overloadability current. Allows +10% load variation. 10% exceeding can be continuous.

I_H = High overloadability current. Allows +50% load variation. 50% exceeding can be continuous.

All values with cosφ = 0.83 and efficiency = 97%.

*) c = power loss into coolant; a = power loss into air; T = total power loss.

All power losses obtained using maximum supply voltage, I_{th} and switching frequency of 3.6 kHz and Closed Loop control mode. All power losses are worst case losses.

If some other mains voltage is used, apply the formula DC P = (U_{DC}/1.35)* $\sqrt{3}$ *In*cosφ*eff% to calculate the VACON® NX Liquid-cooled drive output power.

The voltage classes for the inverter units used in the tables above have been defined as follows:

Input 710 V DC = Rectified 525 V AC supply

Input 930 V DC = Rectified 690 V AC supply

The enclosure class of all inverter units is IP00 (UL open type).

If the motor is continuously (besides start and stop ramps) run at frequencies below 5 Hz, pay attention to the drive dimensioning for low frequencies, i.e. maximum I_H = 0.66*I_{th} or choose drive according to I_H. It is recommended to check the rating with your nearest distributor.

Drive overrating may also be necessary if the process requires high starting torque.

4.3 TECHNICAL DATA

NOTE: NX_8 AC drives are only available as Ch6x AFE/BCU/INU units.

Table 11. Technical data

Mains connection	Input voltage U_{in}	NX_5: 400–500 V AC (–10%...+10%); 465–800 V DC (–0%...+0%) NX_6: 525–690 V AC (–10%...+10%); 640–1100 V DC (–0%...+0%) NX_8: 525–690 V AC (–10%...+10%); 640–1200 V DC (–0%...+0%)	
	Input frequency	45–66 Hz	
	Connection to mains	Once per minute or less	
	DC-link capacitance	Voltage class 500 V:	Ch3 (16-31A units): 410 µF Ch3 (38-61A units): 600 µF CH4: 2400 µF CH5: 7200 µF CH61: 10800 µF CH62/CH72: 10800 µF CH63: 21600 µF CH64/CH74: 32400 µF 2*CH64/2*CH74: 64800 µF
		Voltage class 690 V:	CH61: 4800 µF CH62/CH72: 4800 µF CH63: 9600 µF CH64/CH74: 14400 µF 2*CH64/2*CH74: 28800 µF
Supply network	Networks	TN, TT, IT	
	Short circuit current	Maximum short circuit current has to be < 100 kA.	
Motor connection	Output voltage	0—U_{in}	
	Continuous output current	Rated current at nominal inflow cooling water temperature according to dimensioning charts.	
	Output frequency	0–320 Hz (standard) 7200 Hz (Special software)	
	Frequency resolution	Application dependent	
	Output filter	VACON® Liquid-cooled NX_8 unit must be equipped with a dU/dt or sine filter.	

Table 11. Technical data

Control characteristics	Control method	Frequency control U/f Open Loop Sensorless Vector Control Closed Loop Vector Control
	Switching frequency	NX_5: Up to and including NX_0061: 1...16 kHz; Factory default 10 kHz From NX_0072: 1–12 kHz; Factory default 3.6 kHz NX_6/ NX_8: 1–6 kHz; Factory default 1.5 kHz **NOTE!** Derating required if higher switching frequency than the default is used! **NOTE!** DriveSynch paralleling concept: Recommended minimum switching frequency for open loop control 1.7 kHz and closed loop control 2.5 kHz. Maximum switching frequency 3.6 kHz.
	Frequency reference Analogue input Panel reference	 Resolution 0.1% (10-bit), accuracy ±1% Resolution 0.01 Hz
	Field weakening point	8–320 Hz
	Acceleration time	0.1–3000 s
	Deceleration time	0.1–3000 s
	Braking torque	DC brake: 30% * T_N (without brake option)

Table 11. Technical data

Ambient conditions	Ambient operating temperature	–10 °C (no frost)...+50 °C (at I_{th}) The VACON® NX Liquid-cooled drives must be used in an heated indoor controlled environment.
	Installation temperature	0...+70 °C
	Storage temperature	–40 °C...+70 °C; No liquid in heat sink under 0 °C
	Relative humidity	5 to 96% RH, non-condensing, no dripping water
	Air quality: • Chemical fumes • Solid particles	 IEC 60721-3-3 Edition 2.2, AC drive in operation, class 3C3 IEC 60721-3-3 Edition 2.2, AC drive in operation, class 3S2 No corrosive gases
	Altitude	NX_5: (380–500 V): maximum 3000 m (in case network is not corner grounded) NX_6/NX_8: maximum 2000 m. For further requirements, contact factory 100-% load capacity (no derating) up to 1000 m; above 1000 m derating of maximum ambient operating temperature by 0.5 °C per each 100 m is required.
	Vibration EN 50178/EN 60068-2-6	5–150 Hz Displacement amplitude 0.25 mm (peak) at 3–31 Hz Maximum acceleration amplitude 1 G at 31–150 Hz
	Shock EN 50178, EN 60068-2-27	UPS Drop Test (for applicable UPS weights) Storage and shipping: maximum 15 G, 11 ms (in package)
	Enclosure class	IP00 (UL open type) / Open Frame standard in entire kW / HP range
	Pollution degree	PD2
EMC	Immunity	Fulfils IEC/EN 61800-3 EMC immunity requirements
	Emissions	EMC level N for TN/TT networks EMC level T for IT networks
Safety		IEC/EN 61800-5-1 (2007), CE, UL, cUL, GOST R, (see unit nameplate for more detailed approvals) IEC 60664-1 and UL840 in overvoltage category III.
	Safe Torque Off (STO) board	The drive is equipped with VACON® OPTAF board for prevention of torque on motor shaft. Standards: prEN ISO 13849-1 (2004), EN ISO 13849-2 (2003), EN 60079-14 (1997), EN 954-1 (1996), cat. 3 (hardware disable); IEC 61508-3(2001), prEN 50495 (2006). See VACON® NX OPTAF STO Board User Manual for detailed information.

Table 11. Technical data

Control connections (apply to boards OPT-A1, OPT-A2 and OPT-A3)	Analogue input voltage	0...+10 V, R_i = 200 kΩ, (–10 V...+10 V joystick control) Resolution 0.1%, accuracy ±1%
	Analogue input current	0(4)...20 mA, Ri = 250 W differential
	Digital inputs (6)	Positive or negative logic; 18...24 V DC
	Auxiliary voltage	+24 V, ±10%, maximum voltage ripple < 100 mVrms; maximum 250 mA Dimensioning: maximum 1000 mA/control box 1 A external fuse required (no internal short-circuit protection on the control board)
	Output reference voltage	+10 V, +3%, maximum load 10 mA
	Analogue output	0(4)...20 mA; R_L maximum 500 Ω; Resolution 10 bit; Accuracy ±2%
	Digital outputs	Open collector output, 50 mA/48 V
	Relay outputs	2 programmable change-over relay outputs Switching capacity: 24 V DC/8 A, 250 V AC/8 A, 125 V DC/0.4 A Min. switching load: 5 V/10 mA
Protections	Overvoltage trip limit	NX_5: 911 V DC NX_6: (CH61, CH62, CH63, CH64): 1258 V DC NX_6: (CH72, CH74): 1200 V DC NX_8: (CH61, CH62, CH63, CH64): 1300 V DC
	Undervoltage trip limit	NX_5: 333 V DC NX_6: 461 V DC NX_8: 461 V DC
	Earth fault protection	In case of earth fault in motor or motor cable, only the AC drive is protected.
	Mains supervision	Trips if any of the input phases is missing (AC drives only).
	Motor phase supervision	Trips if any of the output phases is missing.
	Unit overtemperature protection	Alarm limit: 65 °C (heat sink); 75 °C (circuit boards). Trip limit: 70 °C (heat sink); 85 °C (circuit boards).
	Overcurrent protection	Yes
	Motor overload protection	Yes * Motor overload protection provided at 110% of full motor load current.
	Motor stall protection	Yes
	Motor underload protection	Yes
	Short-circuit protection of +24 V and +10 V reference voltages	Yes

*) NXP00002V186 (or newer) must be used for the motor thermal memory and memory retention functionality to conform to UL 508C requirements. If an older system software version is used, motor overtemperature protection is required at installation to comply with UL requirements.

Table 11. Technical data

Liquid cooling	Allowed coolants	Demineralized water or pure water with the quality specified in Chapter 5.2.3.1. Ethylene glycol • DOWCAL 100 • Clariant Antifrogen N Propylene glycol • DOWCAL 200 • Clariant Antifrogen L
	Volume	See Table 15.
	Temperature of coolant	0...35 °C input (l_{th}); 35...55 °C: derating required, see Chapter 5.3. Maximum temperature rise during circulation: 5 °C No condensation allowed. See Chapter 5.2.6.
	Coolant flow rates	See Chapter 5.2.4.3.
	System maximum working pressure	6 bar
	System maximum peak pressure	30 bar
	Pressure loss (at nominal flow)	Varies according to size. See Chapter 5.2.5.2.

5. INSTALLATION

5.1 MOUNTING

VACON® NX Liquid-cooled Drive modules must be installed into an enclosure. The drives consisting of one module will be mounted on the mounting plate. The drives that include two or three modules are mounted inside a mounting bracket (see table below) which will then be installed in the enclosure.

NOTE! If any other than vertical installation position is required, contact your distributor!

NOTE! The allowed installation temperature is 0...+70 °C.

In Chapter 5.1.2 you will find the dimensions of VACON® NX Liquid-cooled drives installed on mounting bases (plates and brackets).

5.1.1 LIFTING THE DRIVE

We recommend you to always use a jib crane or similar elevating device to lift the AC drive/ inverter unit. See figures below for correct lifting points.

For units with no mounting bracket (see Chapter 5.1.2.1), the best place for hoisting is the hole(s) in the middle of the mounting plate (Lifting point 1). VACON® NX Liquid-cooled drives consisting of several modules can the most safely and easily be lifted by the holes in the mounting bracket (Lifting point 2) using a screw pin shackle. Pay also attention to the recommended dimensions of the hoisting belt and the beam. See Figure 4.

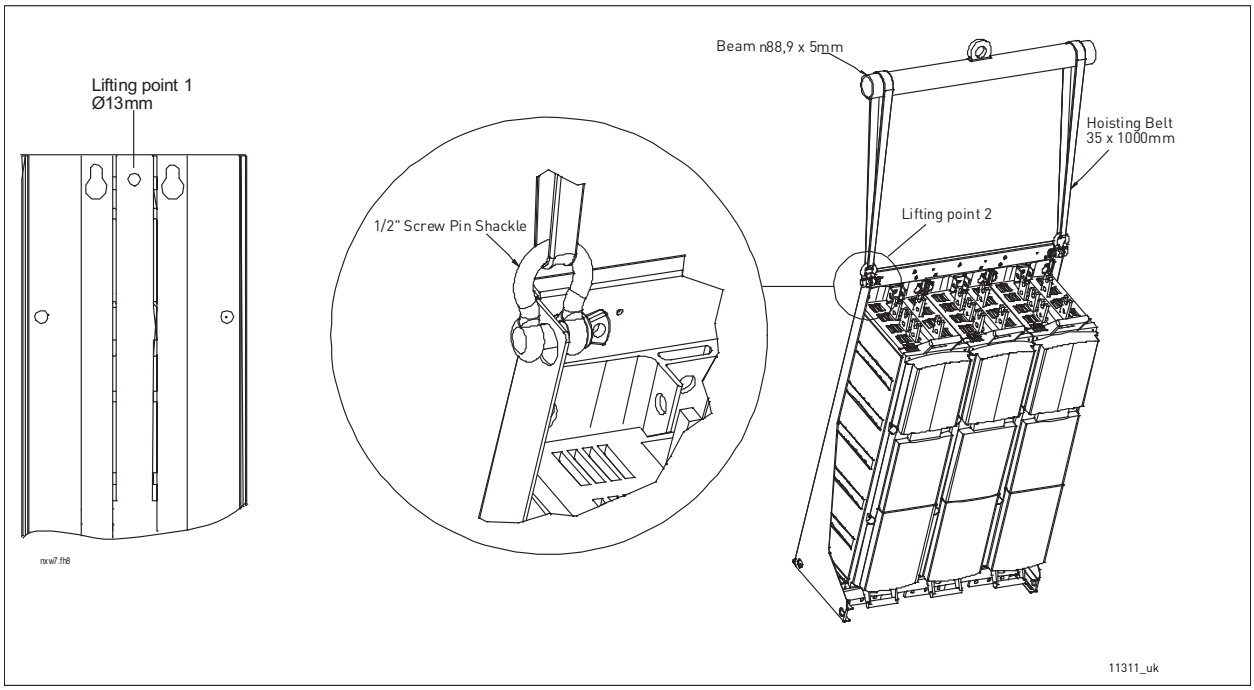

Figure 4. Lifting points for drives consisting of one module (left) and several modules

In cabinet installation, the hoisting procedure described above right may, however, become difficult or even impossible if the cabinet width does not allow the use of the screw pin shackle in Lifting point 2 (see above).

In such case, follow the lifting procedure described in Figure 5. The mounting becomes easier and safer if the drive can be laid on a supporting girder fixed on the cabinet frame. We also recommend to use an aligning stud to guarantee an easy and safe mounting.

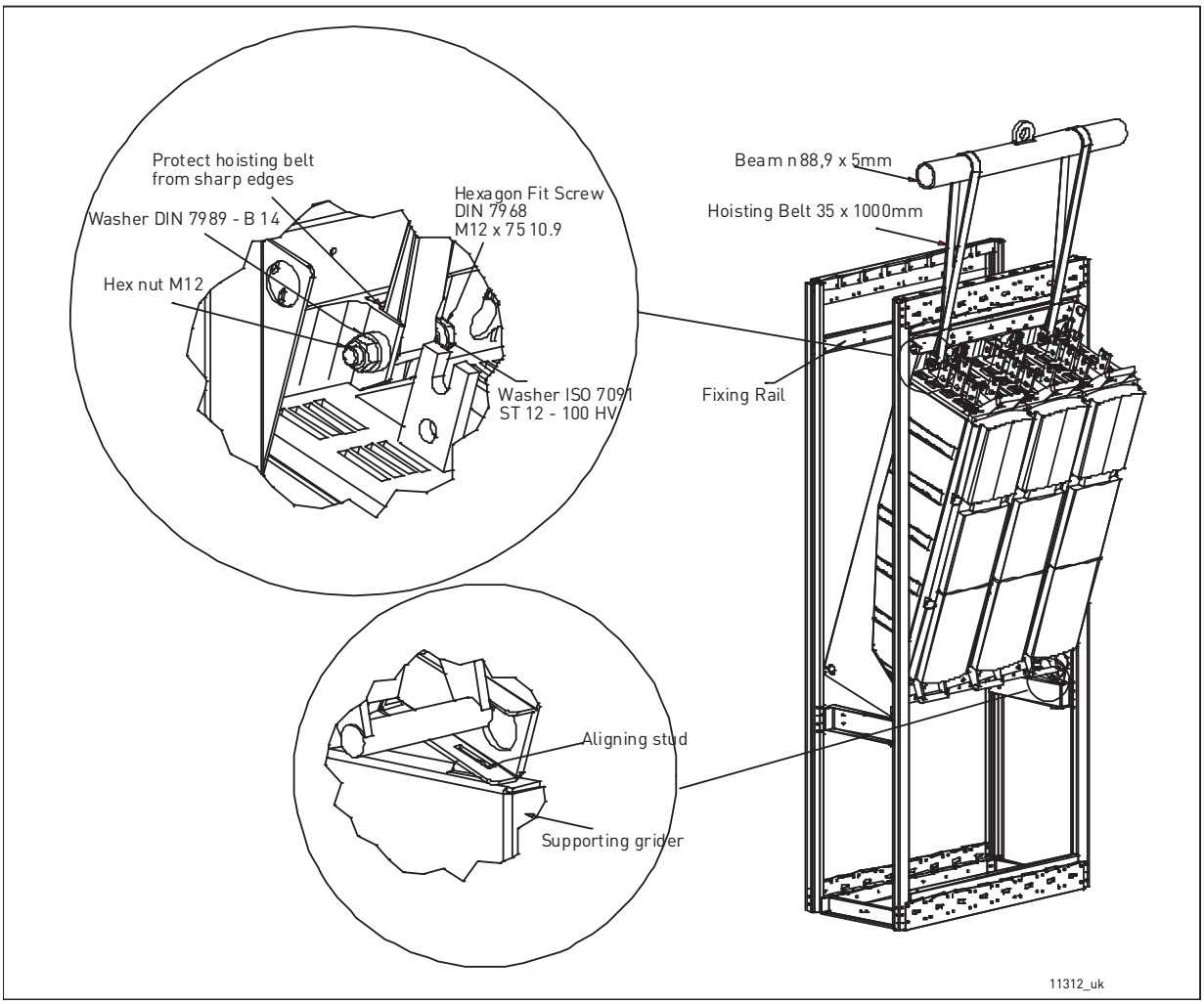

Figure 5. Lifting of drive into a narrow mounting space

To additionally stabilize the cabinet with the drive, we recommend to mount a fixing rail on the back of the cabinet, to which the top of the drive can be fastened with 5 or 6 M5 screws. The cut-out is compatible with Rittal or Veda cabinets. Also secure the drive with M8 nuts and studs to the supporting girder. See Figure 5 and Figure 6.

The VACON® NX Liquid-cooled drives are equipped with plastic handles and these handles can be used to move and lift drives consisting of one power module (CH61, CH62, and CH72) by hand.

NOTE! Never lift a drive from the plastic handle or handles with an elevating device, such as jib crane or hoist. Recommended lifting procedure for these units are as described in Figure 4 and Figure 5.

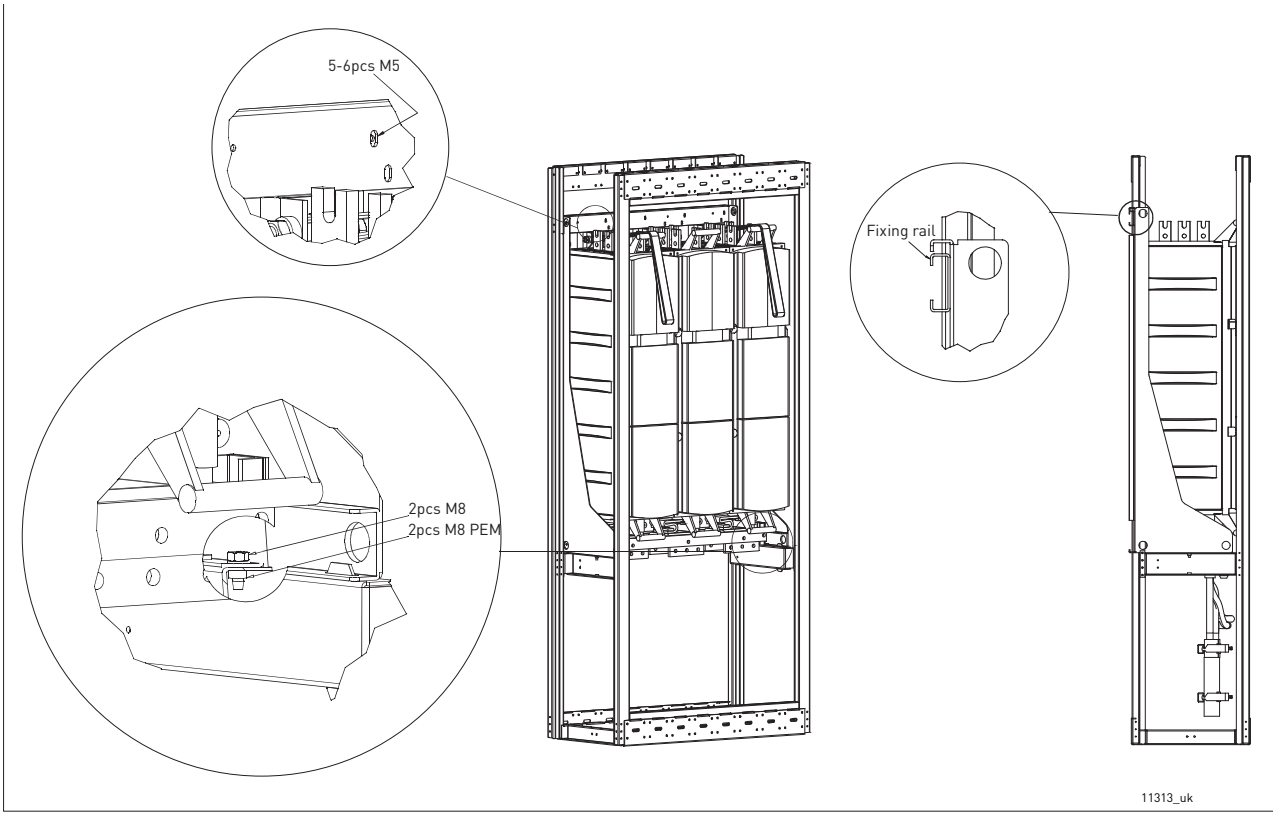

Figure 6. Securing the drive to the cabinet frame

5.1.2 VACON® NX LIQUID-COOLED DIMENSIONS

5.1.2.1 Drives consisting of one module

Table 12. One-module drive dimensions (mounting base included)

Chassis	Width [mm]	Height [mm]	Depth [mm]	Weight* [kg]
CH3	160	431	246	15
CH4	193	493	257	22
CH5	246	553	264	40
CH61/62	246	658	372	55
CH72	246	1076	372	90

*. AC choke excluded.

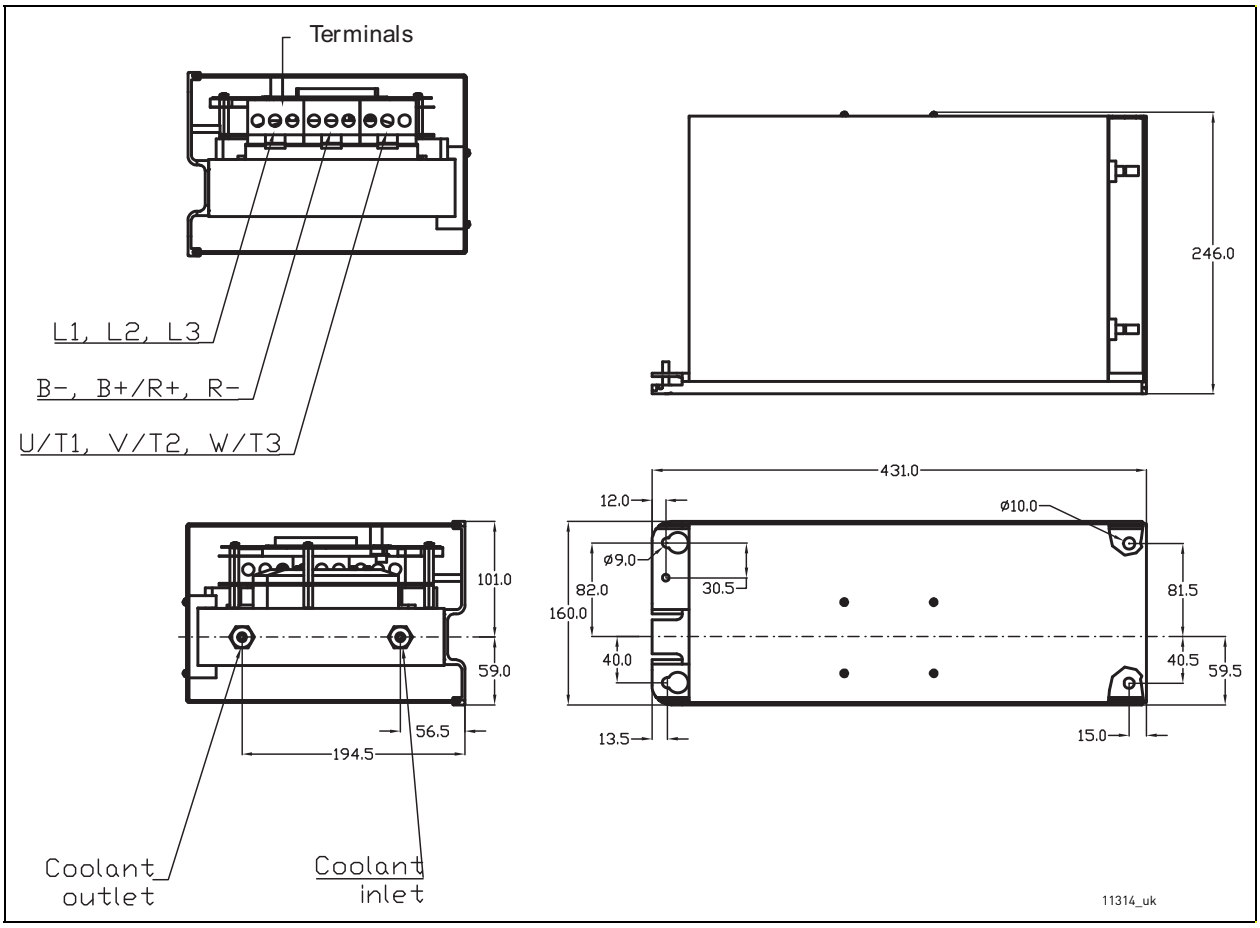

Figure 7. VACON® NX Liquid-cooled drive dimensions, CH3

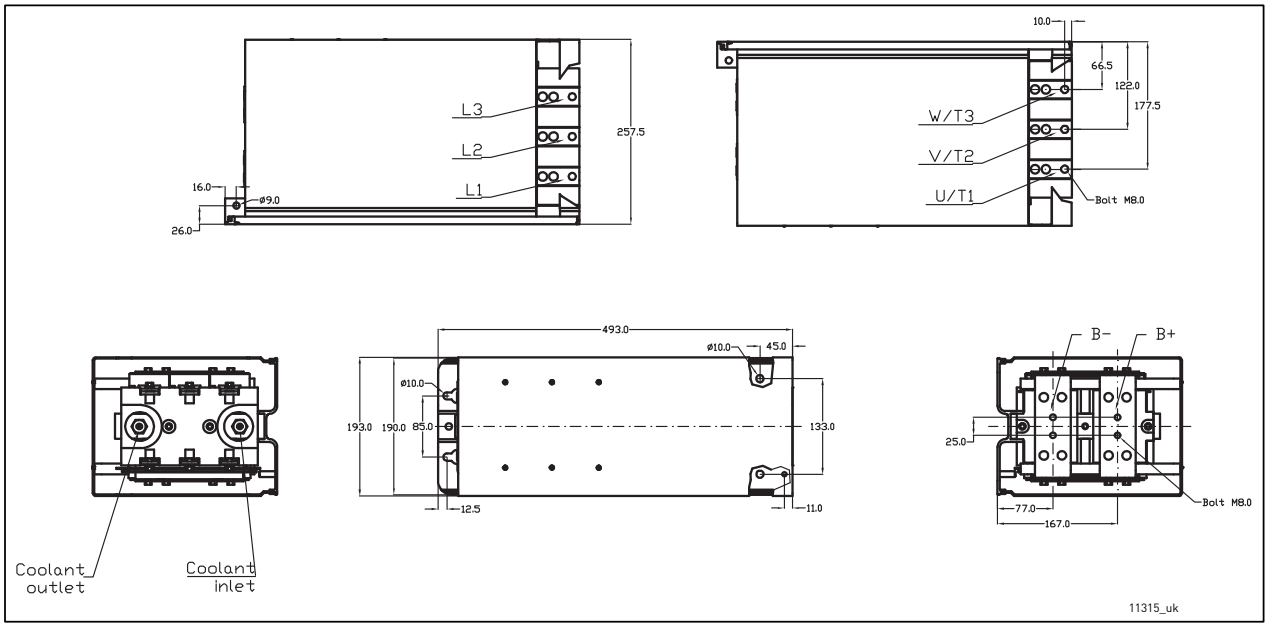

Figure 8. VACON® NX Liquid-cooled drive dimensions (AC drive), CH4

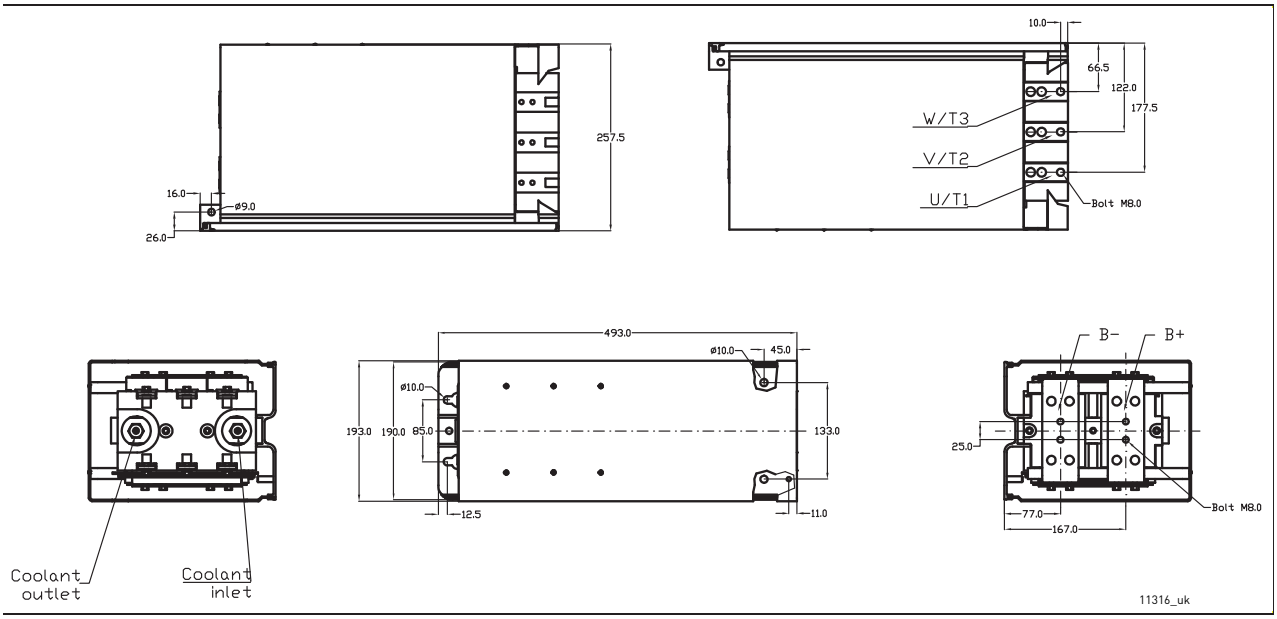

Figure 9. VACON® NX Liquid-cooled drive dimensions (inverter), CH4

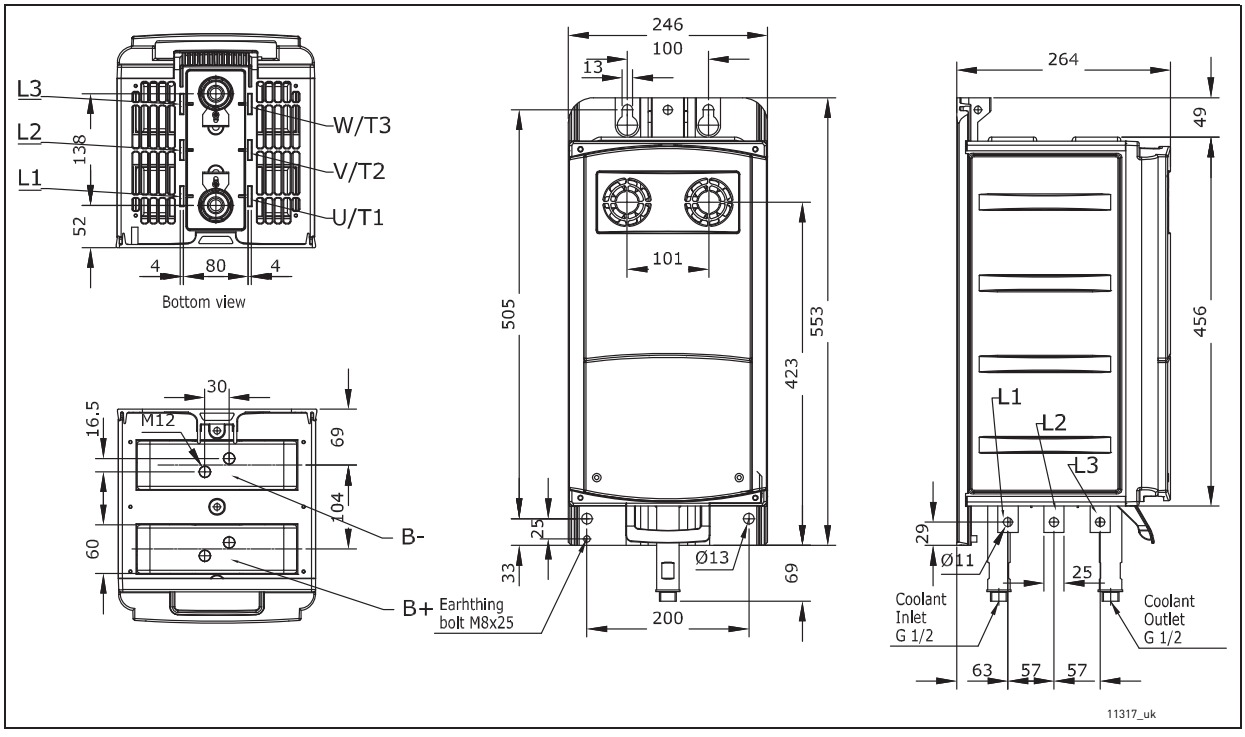

Figure 10. VACON® NX Liquid-cooled dimensions, CH5 AC drive

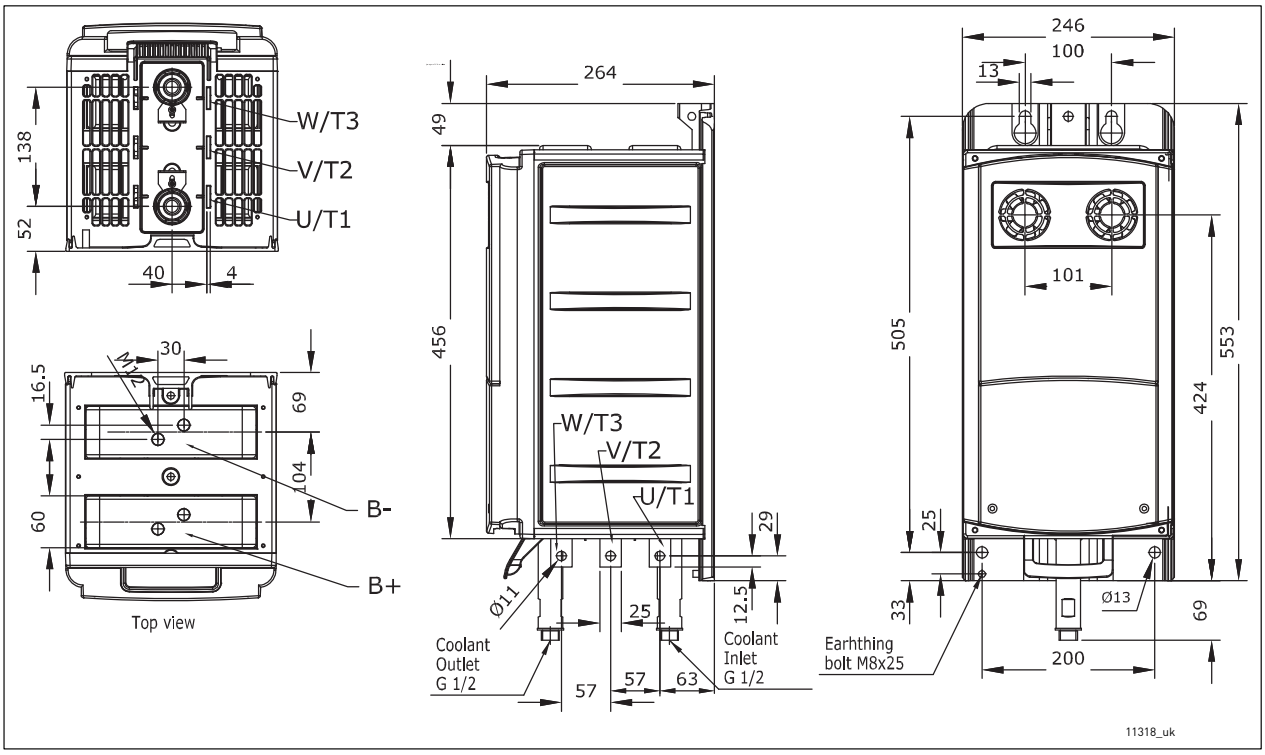

Figure 11. VACON® NX Liquid-cooled dimensions, CH5 inverter

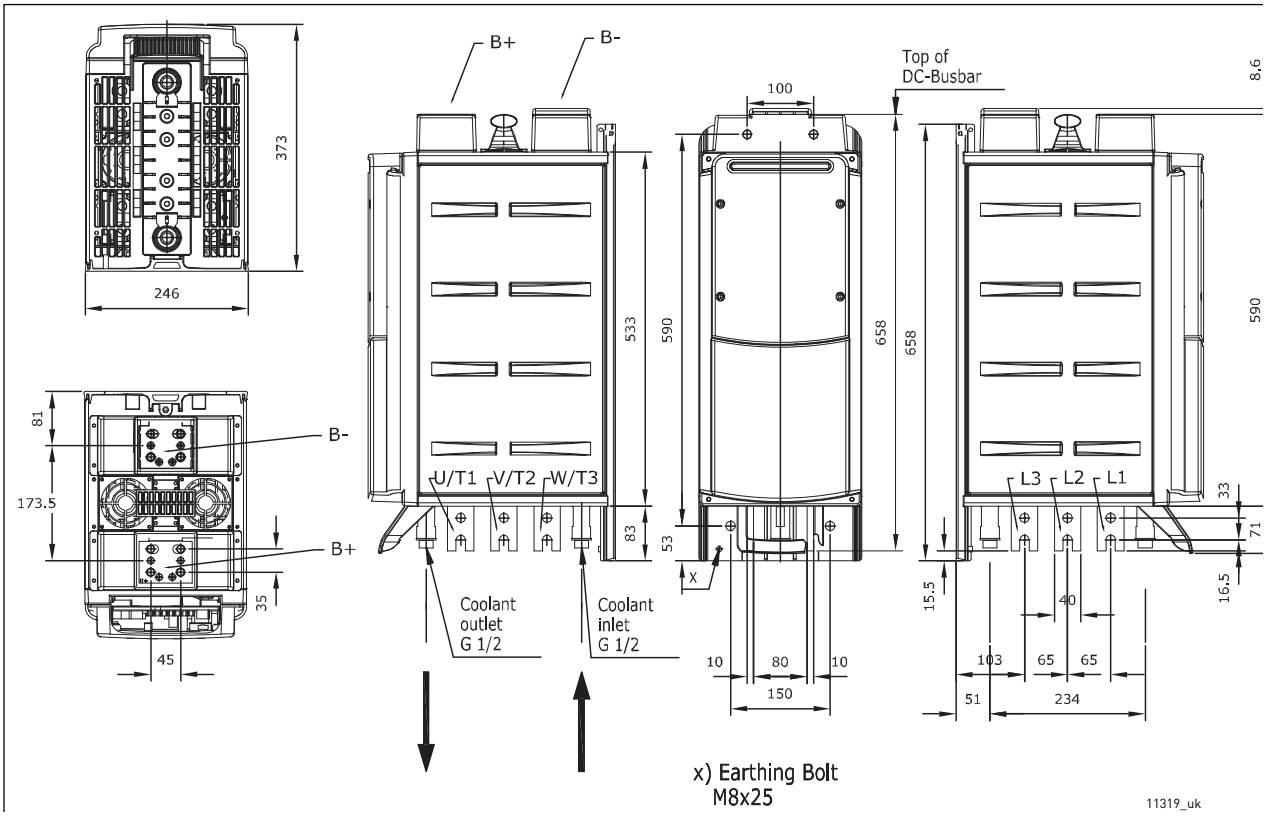

Figure 12. VACON® NX Liquid-cooled AC drive, CH61

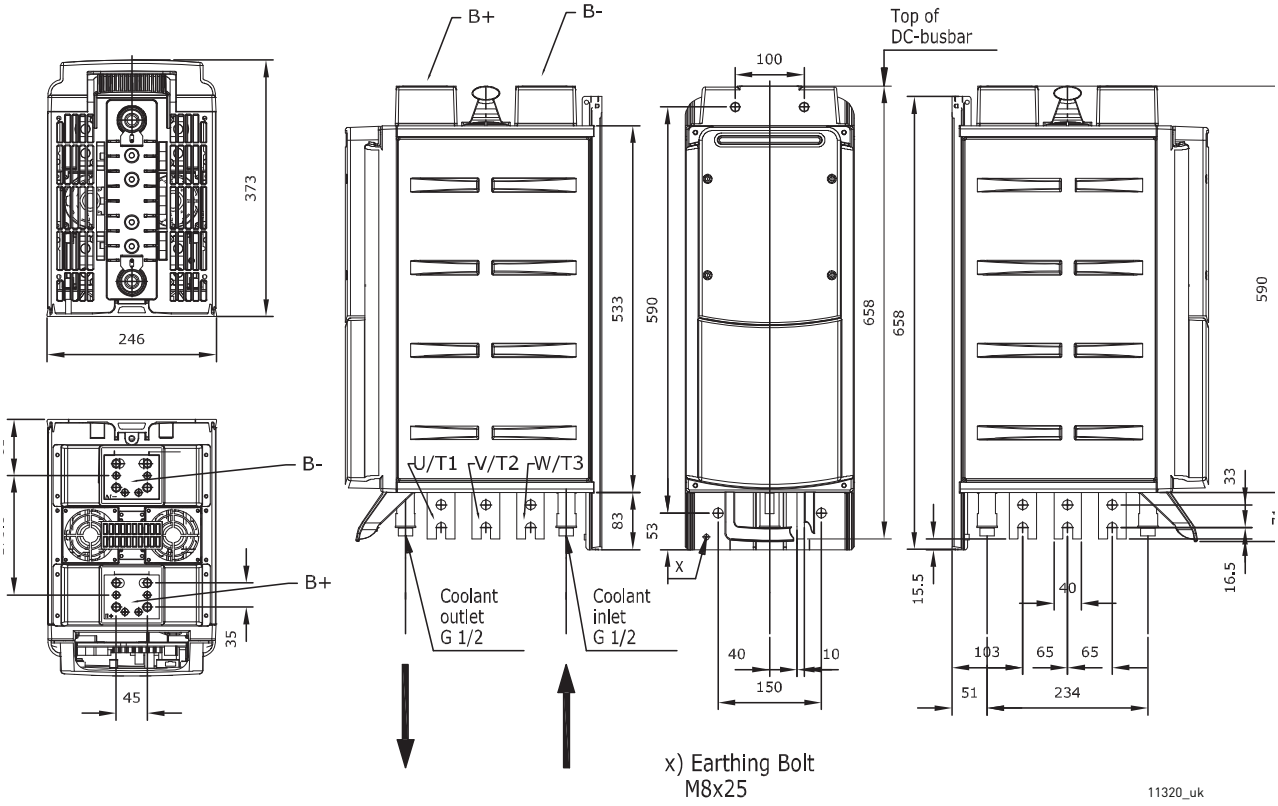

Figure 13. VACON® NX Liquid-Cooled inverter, CH61

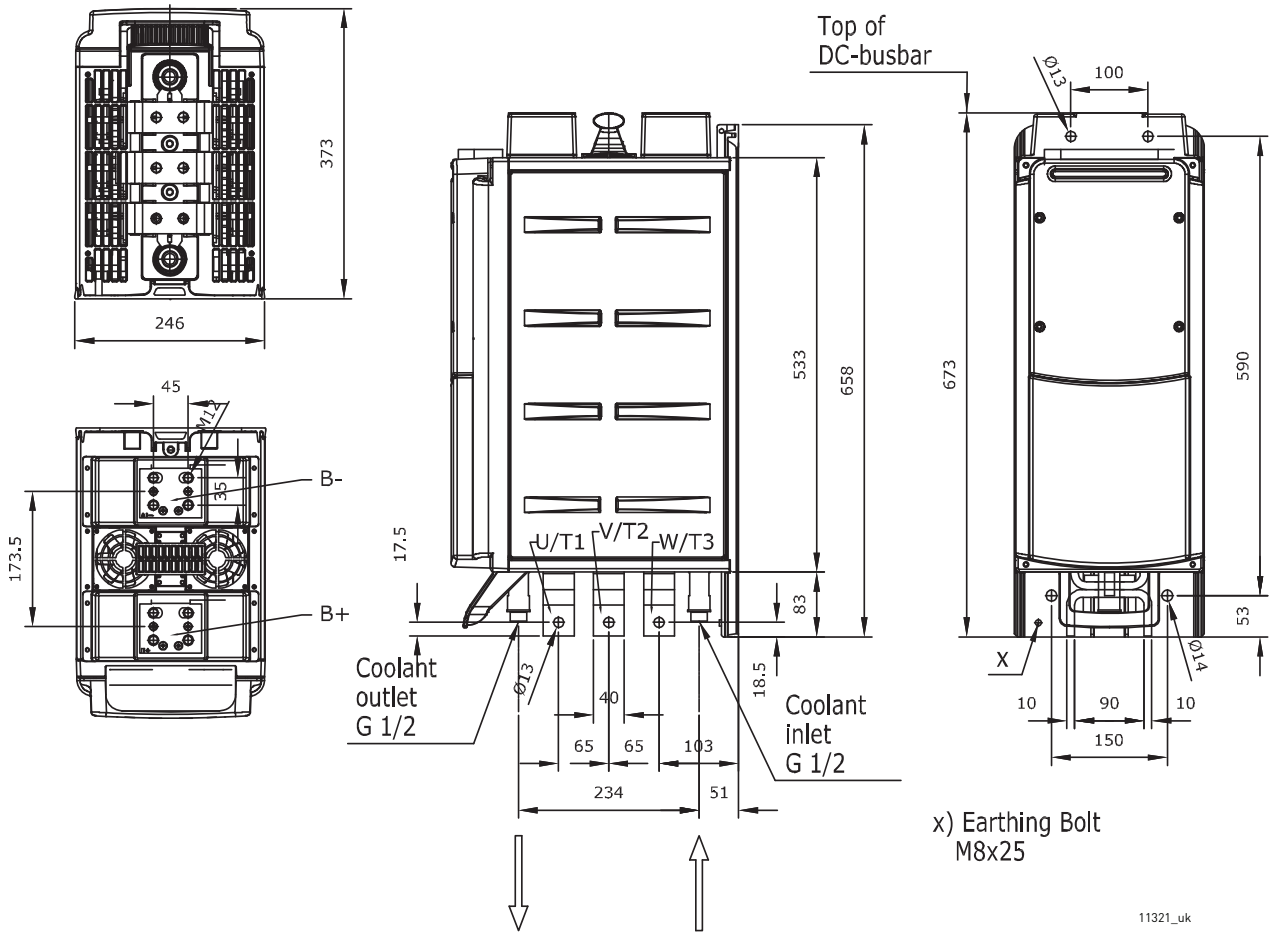

Figure 14. VACON® NX Liquid-cooled inverter, CH62

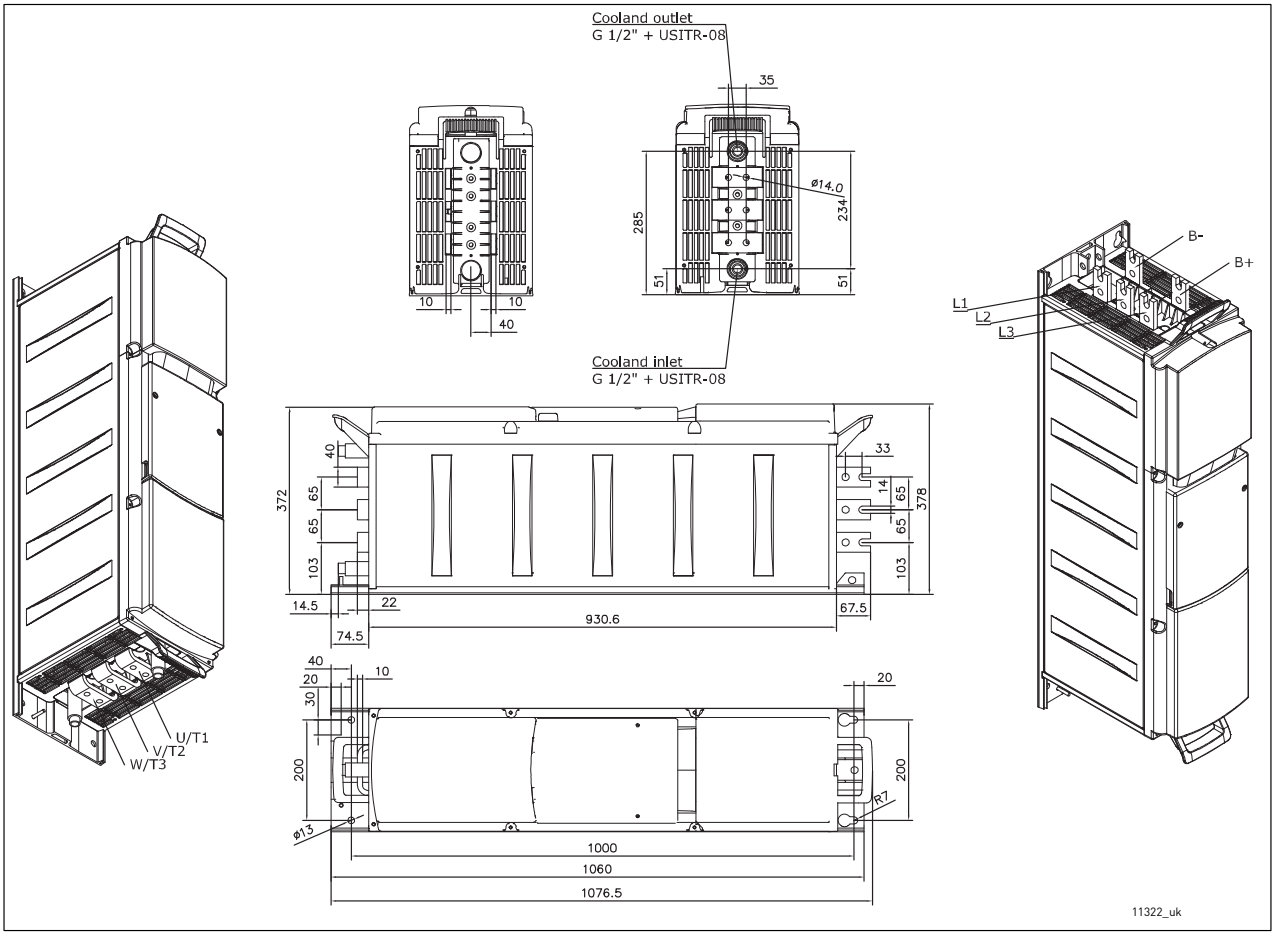

Figure 15. VACON® NX Liquid-cooled AC drive (6-pulse), CH72

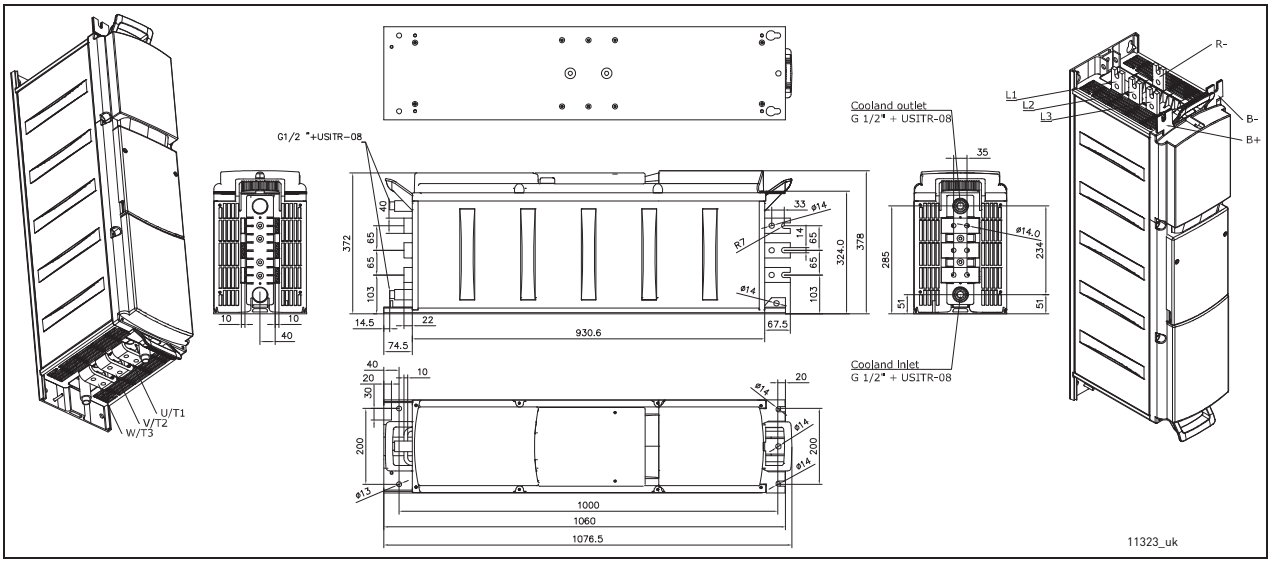

Figure 16. VACON® NX Liquid-cooled AC drive (6-pulse) with internal brake chopper

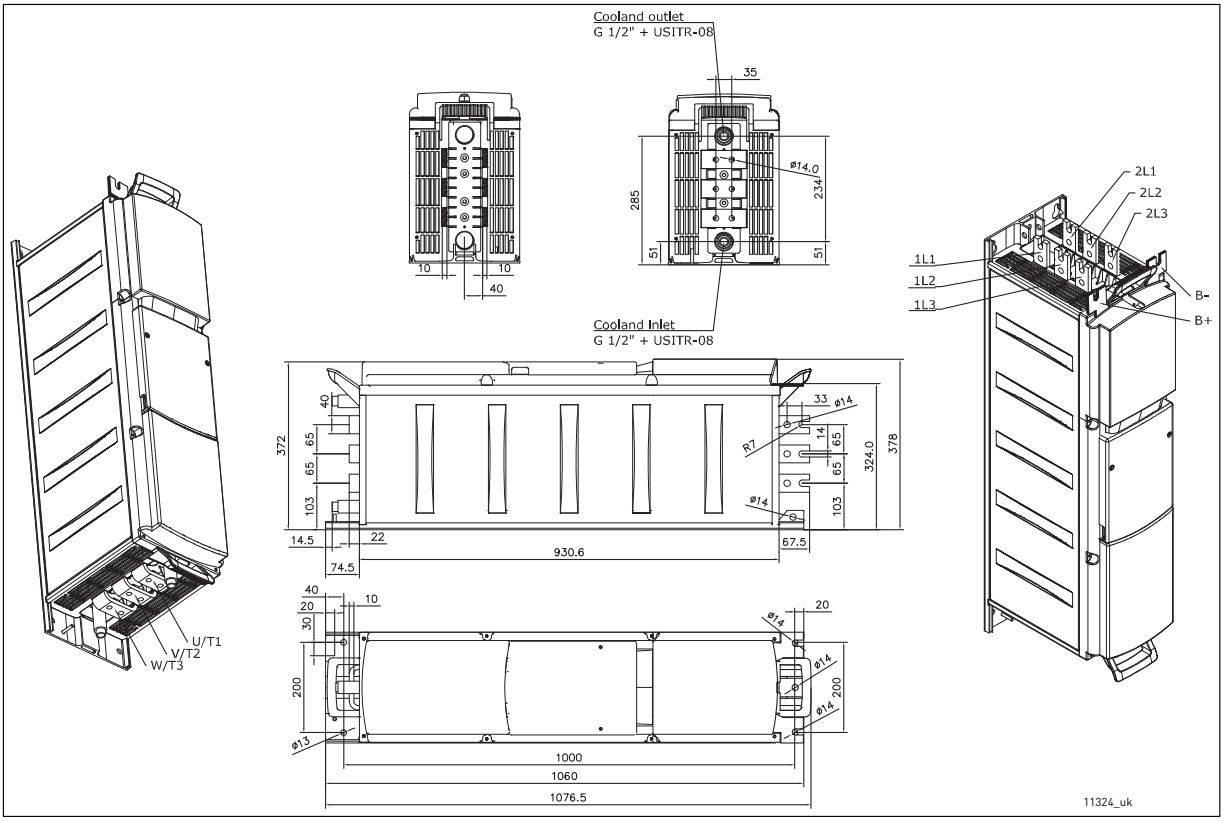

Figure 17. VACON® NX Liquid-cooled AC drive (12-pulse), CH72

5.1.2.2 Drives consisting of several modules

VACON® NX Liquid-cooled drives consisting of several modules are mounted in a mounting bracket as presented in Figure 18.

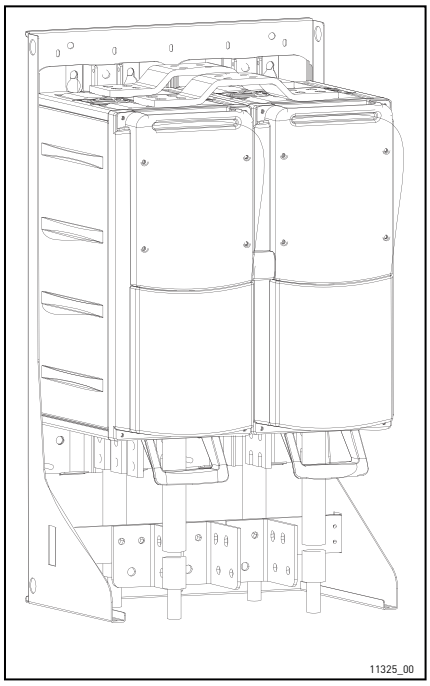

Figure 18. Drive mounted inside mounting bracket

Table 13. Several-module drive dimensions (mounting bracket included)

Chassis	Width [mm]	Height [mm]	Depth [mm]	Weight [kg]
CH63	505	924	375	120
CH64	746	924	375	180
CH74	746	1175	385	280

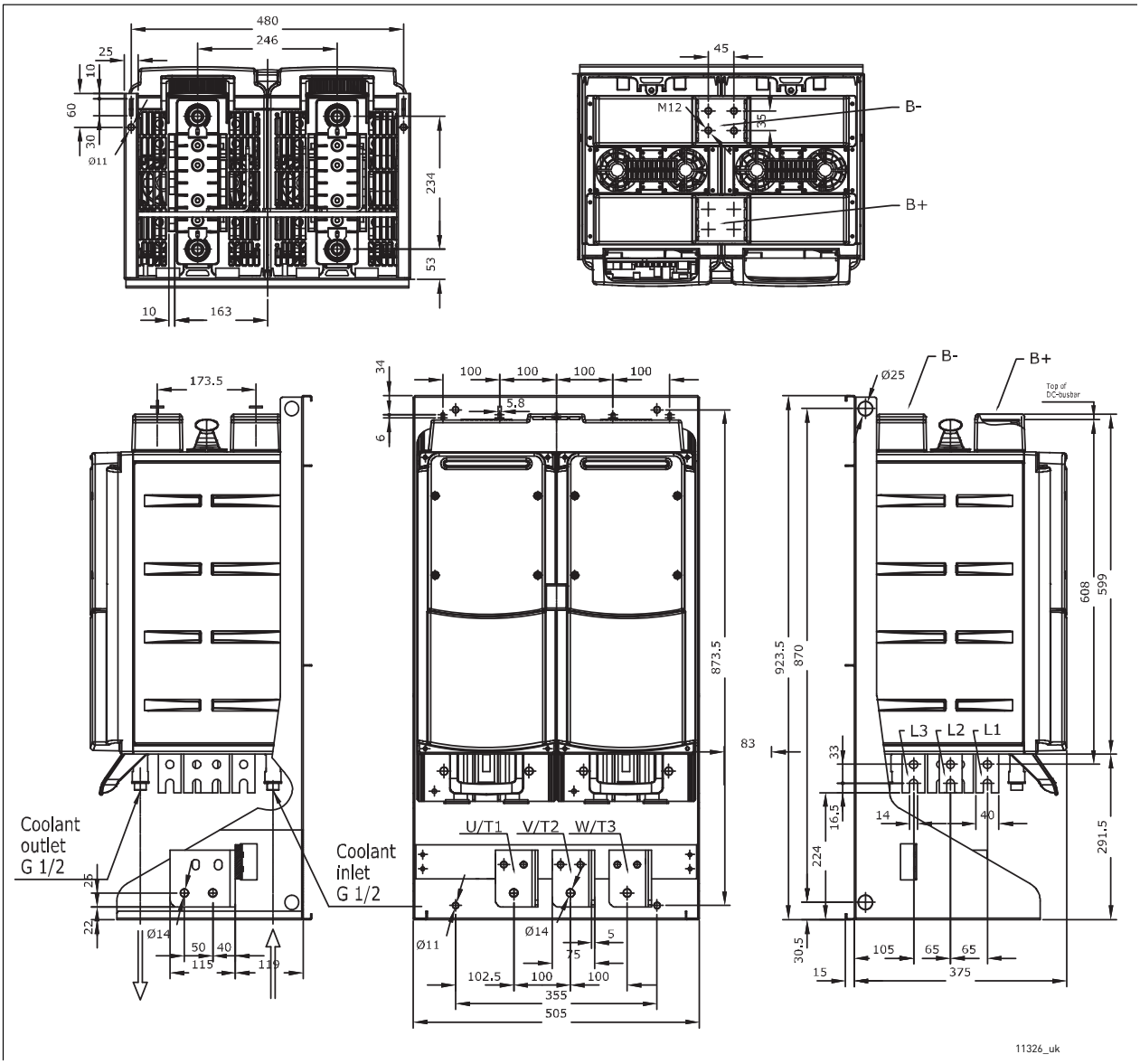

Figure 19. VACON® NX Liquid-cooled AC drive with mounting bracket, CH63

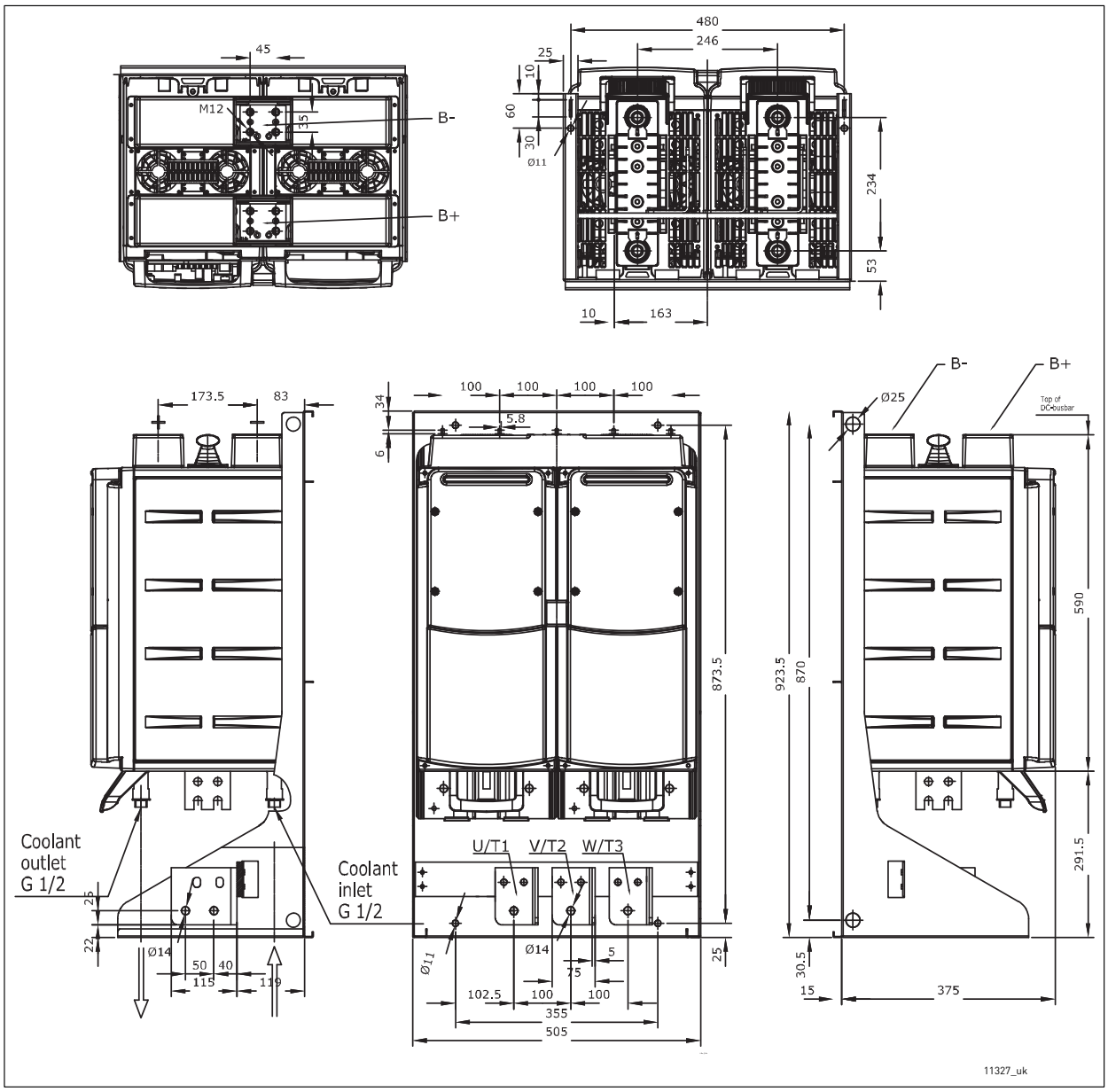

Figure 20. VACON® NX Liquid-cooled inverter with mounting bracket, CH63

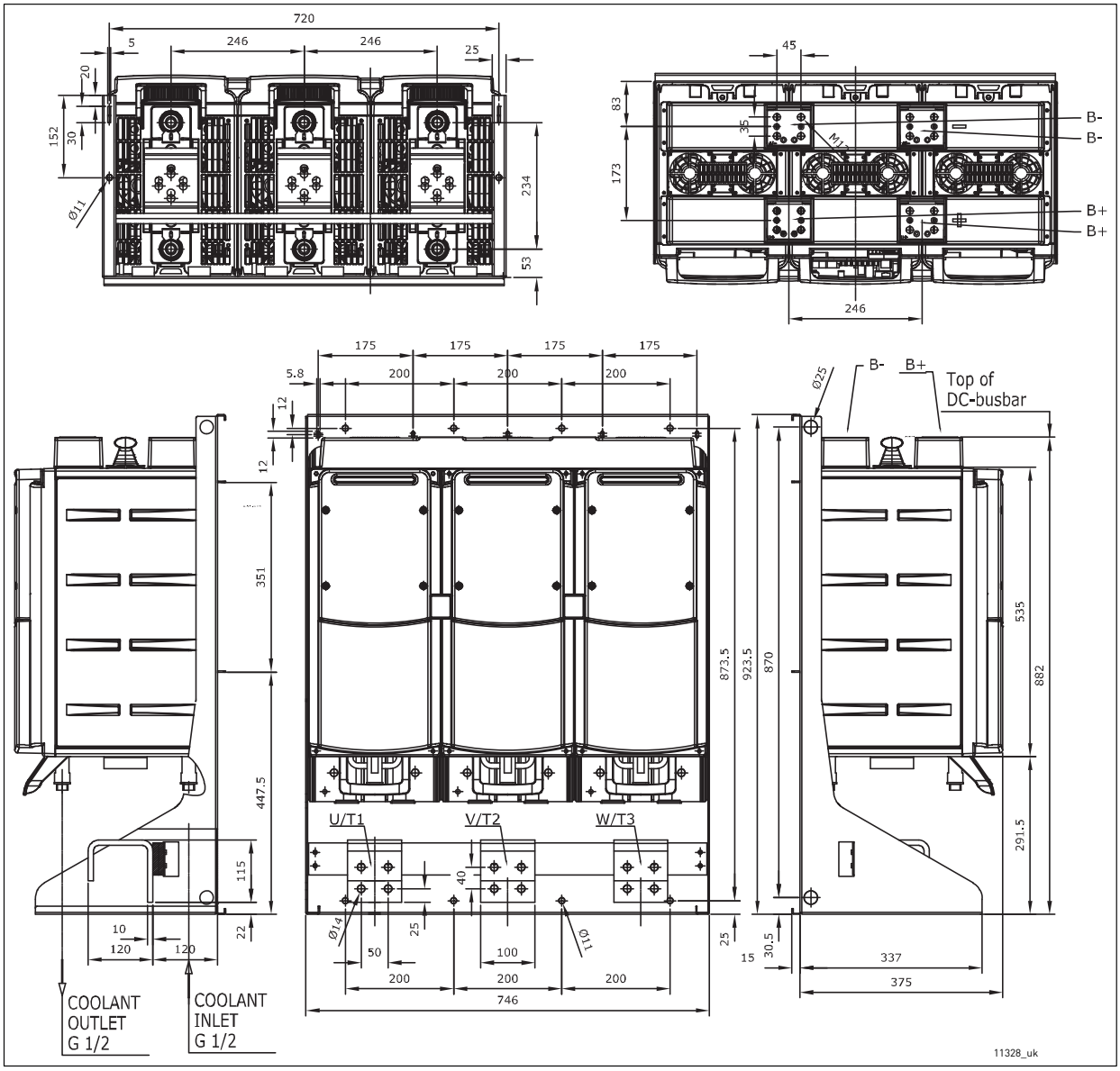

Figure 21. VACON® NX Liquid-cooled inverter dimensions, CH64, IP00 (UL open type)

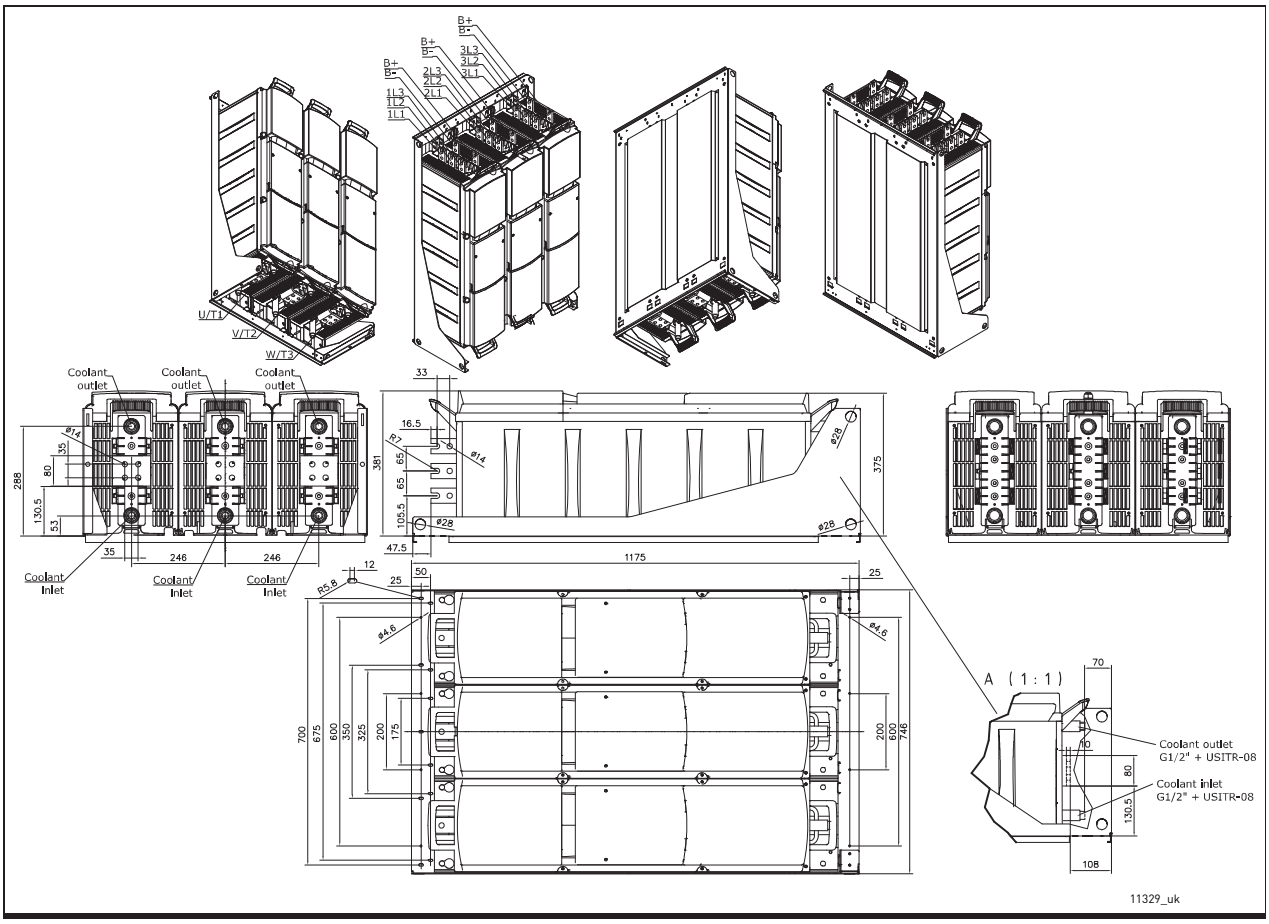

Figure 22. VACON® NX Liquid-cooled AC drive (6-pulse) dimensions, CH74, IP00 (UL open type)

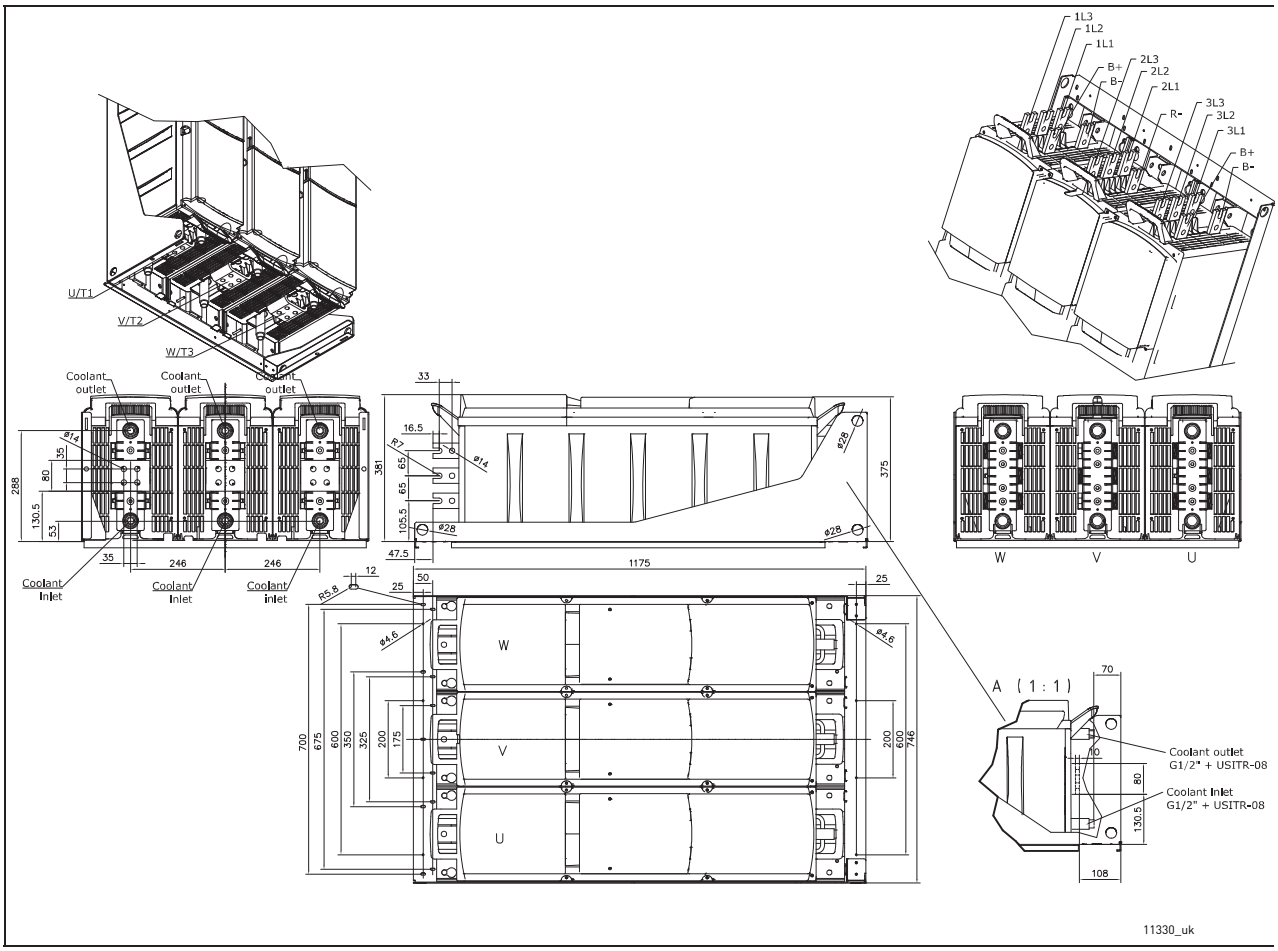

Figure 23. VACON® NX Liquid-cooled AC drive (6-pulse) with internal brake chopper dimensions, CH74, IP00 (UL open type)

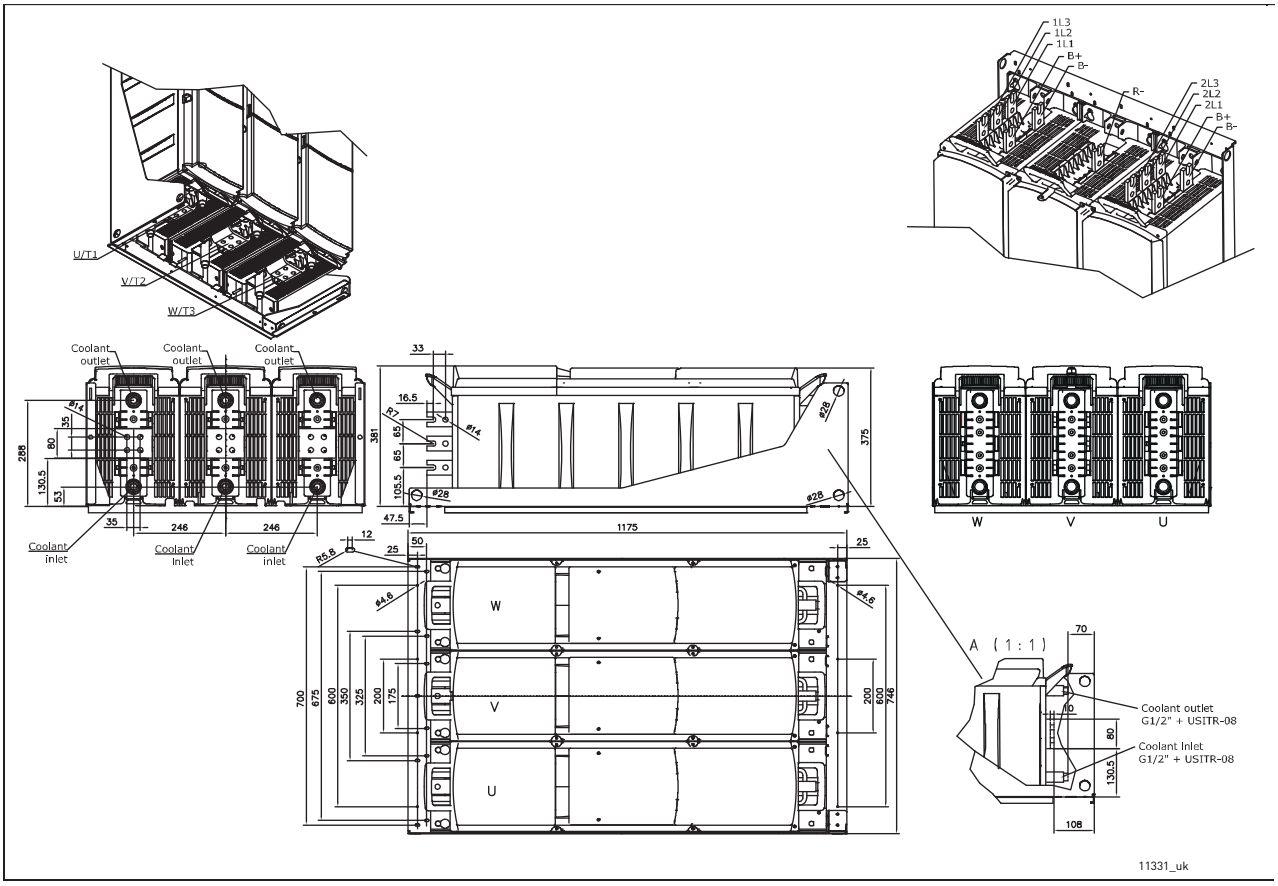

Figure 24. VACON® NX Liquid-cooled AC drive (12-pulse) with internal brake chopper dimensions, CH74, IP00 (UL open type)

5.2 COOLING

5.2.1 SAFETY IN LIQUID-COOLING



WARNING
Glycols and inhibitors are poisonous. If touched or consumed, they can cause injury.
- Prevent the coolant from getting into the eyes.
- Do not drink the coolant.



CAUTION
Hot coolant can cause burns.
- Avoid contact with the hot coolant.



CAUTION
Sudden release of pressure from the cooling system can cause injury.
- Be careful when operating the cooling system.



NOTICE
Insufficient cooling can cause the product to become too hot and thus become damaged.
- To make sure that the cooling capacity of the cooling system stays sufficient, make sure that the cooling system is vented and that the coolant circulates properly.

5.2.2 GENERAL INFORMATION ON COOLING

VACON® NX Liquid-cooled drives are cooled with liquid. The liquid circulation of the drive is usually connected to a heat exchanger (liquid-to-liquid or liquid-to-air) that cools down the liquid circulating in the cooling elements of the drive. The cooling elements are made of aluminum. That is why the coolants allowed to be used are demineralized (or deionized, or distilled) water with corrosion inhibitors, or a mixture of this type of water, and glycol with corrosion inhibitors.

There are two types of circulation system: open systems and closed systems. Always use a closed system with VACON® NX Liquid-cooled drives.

An open system has no pressure but the hydrostatic and pumping pressure. It allows free contact between the coolant and air. Air is continuously dissolved into the coolant, which corrodes and damages the components.

In a closed system, the piping is air-tight and there is a preset pressure inside the pipes. The pipes must be made of metal, or a specific plastic or rubber that includes an oxygen barrier that limits the diffusion of oxygen. Minimizing of oxygen content in the coolant decreases the risk of corrosion of the metal parts. Closed systems usually have an expansion tank that allows for a safe change of volume of the coolant due to temperature changes.

5.2.3 COOLANT

5.2.3.1 Quality requirements for purified water



NOTICE
Hydrocarbons damage the rubber seals of the cooling system.
- Do not use hydrocarbons (for example mineral oil) as coolant.
- Do not mix hydrocarbons to coolant.

Table 14. Requirements for purified water

Property	Required value
pH	6–8
Chlorides	⩽ 25 ppm
Sulphate ions	⩽ 25 ppm
Maximum particle size	⩽ 50 µm
Total dissolved solids	⩽ 200 ppm
Total hardness ($CaCO_3$)	3–4.6 dH° (53–80 ppm)
Hydrogen carbonate	⩽ 50 ppm
Electrical conductivity	⩽ 500 µS/cm

5.2.3.2 Purified water as coolant

Purified water can be used as coolant if there is no risk of freezing. Freezing water permanently damages the cooling system. Purified water is demineralized, deionized, or distilled water.

Always use an inhibitor Cortec VpCI-649 with 1.0% of volume with purified water.



CAUTION
Some components are made of aluminum, which has limited corrosion resistance against high chloride concentrations. Drinking water can have a chloride concentration of 250 ppm, which increases the aluminum corrosion rate. High chloride concentration exposes aluminum especially to pitting corrosion which can damage the system relatively quickly.
- Use purified (demineralized, deionized, or distilled) water with corrosion inhibitors.

5.2.3.3 Antifreeze mix as coolant

The following antifreeze products are a good general solution for liquid cooling since they provide freeze protection and corrosion protection.

The allowed antifreeze coolants are the following ethylene glycols and propylene glycols.

Ethylene glycols

- DOWCAL 100
- Clariant Antifrogen N

Propylene glycols

- DOWCAL 200
- Clariant Antifrogen L

These glycols already include corrosion inhibitors. Do not add any other inhibitor. Do not mix different glycol qualities because there can be harmful chemical interactions.

The glycol concentration of the coolant must be 25–55% by volume, according to the specified ambient temperature. Higher concentration reduces cooling capacity. Lower concentration results in biological growth and inadequate amount of corrosion inhibitors. Antifreeze must be mixed with purified water according to Chapter 5.2.3.1.

5.2.3.4 Temperature of the coolant

To gain full performance of the product, the temperature of the coolant entering the system module must be a maximum of 35 °C. While circulating inside the cooling element, the liquid transfers the heat produced by the power semiconductors and other components. The temperature rise of the coolant during the circulation is typically less than 5 °C. Typically, 95% of the power losses are dissipated in the coolant. It is recommended to equip the cooling circulation with temperature supervision.

5.2.4 COOLING SYSTEM

5.2.4.1 Materials



WARNING
The liquid carrying hoses from the network to the cooling elements of the drive must not be electrically conductive. Risk of electrical shock and device damage!

Allowed materials in the cooling system

These materials are allowed in the cooling system if they are compatible with the coolant.

- Aluminum
- Stainless steel AISI 304/316
- Plastic*
- Elastomers (EPDM, NBR, FDM)*

* If plastic or elastomers are used, check material compatibility within the temperature range of the coolant. See Chapter 4.3.

Do not use PVC, copper, brass or other materials not compatible with the heat sink material or coolant.

If the liquid-cooled drive is equipped with a nickel coated aluminum heat sink, and if compatible with the coolant, copper and brass can be used in the liquid circulation.



CAUTION
Using copper or copper alloy pipes or parts in contact with the coolant damages the system.

- Do not use pipes or parts made of copper or alloys that include copper. If metallic pipes are used in the cooling system, use aluminum or stainless steel pipes. Use AISI316 for steel, and, for example, EN-AW6060, EN-AW6063, or EN-AW6082 for aluminum.

Recommended materials for plastic pipes

- PA11
- PA12
- PEX with oxygen barrier
- PEX-AL-PEX

The hoses must tolerate a peak pressure of 30 bar.

5.2.4.2 Heat exchanger

The heat exchanging equipment can be located outside the electrical room in which the AC drives are. The connections between these two are made on site. To minimize the pressure drops, the piping must be made as short and straight as possible. It is also recommended to install a regulating valve that is equipped with a flow rate measurement point. This makes it possible to measure and regulate the coolant circulation in the commissioning phase.

The highest point of the piping must be equipped with either an automatic or a manual venting device. The material of the piping must comply with at least AISI 304 (and AISI 316 is recommended). Before you connect the pipes, clean the bores thoroughly. If cleaning with water is not possible, use pressured air to remove all loose particles and dust.

The cleanliness of the heat exchanger, and therefore the heat exchanging capacity, depend on the purity of the process water. The more impure the water, the more frequently the heat exchanger needs cleaning.

In order to prevent dirt particles from accumulating in the connections and thus gradually weakening the cooling effect, installation of filters is also recommended.

5.2.4.3 Flow rates

In the tables below, see the specifications related to the cooling agent and its circulation. See also Table 7.

Table 15. Information about cooling agent and its circulation

Chassis	Min. liquid flow per element (drive) [dm^3/min]	Nominal liquid flow per element (drive) [dm^3/min]			Max. liquid flow per element (drive) [dm^3/min]	Liquid volume/ element [l]
	A	A	B	C	A	A
CH3	3 (3)	5 (5)	5.4 (5.4)	5.8 (5.8)	20 (20)	0.11
CH4	8 (8)	10 (10)	11 (11)	12 (12)	20 (20)	0.15
CH5	10 (10)	15 (15)	16 (16)	17 (17)	40 (40)	0.22
CH60	15 (15)	25 (25)	27 (27)	29 (29)	40 (40)	0.38
CH61	15 (15)	25 (25)	27 (27)	29 (29)	40 (40)	0.38
CH62	15 (15)	25 (25)	27 (27)	29 (29)	40 (40)	0.38
CH63	15 (30)	25 (50)	27 (54)	29 (58)	40 (80)	0.38
CH64	15 (45)	25 (75)	27 (80)	29 (86)	40 (120)	0.38
CH72	20 (20)	35 (35)	37 (37)	40 (40)	40 (40)	1.58
CH74	20 (60)	35 (105)	37 (112)	40 (121)	40 (120)	1.58

Definitions:
A = 100% water; B = Water/Glycol mixture 80:20; C = Water/Glycol mixture (60:40)
Minimum liquid flow = Minimum flow rate to ensure of total venting of the cooling element
Nominal liquid flow = Flow rate that allows running the drive at Ith
Maximum liquid flow = If flow rate exceeds maximum liquid flow, risk of cooling element erosion increases

Liquid reference temperature, input: 30 °C
Maximum temperature rise during circulation: 5 °C

NOTE! Unless minimum liquid flow rate is ensured, air pockets may develop in the cooling elements. Automatic or manual de-airing of the cooling system must also be ensured.

The following table will help you to determine the appropriate flows of cooling agent (l/min) with given power losses (see Chapter 4.2).

Table 16. Cooling agent flow rates (l/min) in relation to power loss at certain glycol/water mixture

Power loss [kW]	Glycol/Water ratio					
	100/0	80/20	60/40	40/60	20/80	0/100
1	4.41	3.94	3.58	3.29	3.06	2.87
2	8.82	7.88	7.15	6.58	6.12	5.74
3	13.23	11.82	10.73	9.87	9.18	8.61
4	17.64	15.75	14.31	13.16	12.24	11.48
5	22.05	19.69	17.88	16.45	15.30	14.35
6	26.46	23.63	21.46	19.74	18.36	17.22
7	30.86	27.57	25.03	23.03	21.42	20.10
8	35.27	31.51	28.61	26.32	24.48	22.97
9	39.68	35.45	32.19	29.61	27.54	25.84
10	44.09	39.38	35.76	32.90	30.60	28.71

5.2.5 COOLING SYSTEM CONNECTIONS

The external cooling system must be connected to each one of the cooling elements of the inverter or AC drive.

NOTE! Do not connect the cooling elements in series. Connecting in series requires high flow rates and high pressure because of the temperature rise of the coolant in the drive units.

The delivery comprises hoses (Technobel Noir Tricoflex, Art.no 135855) 1.5 m in length and 16 mm in diameter (CH5, CH6, CH7). These hoses have screw type connectors with internal thread. The connection of the hoses is made on the aluminium adapter (external thread) of the cooling element. The customer end thread of the cooling hose is G1/2" male fixed including a Usit-R sealing.



11335_00

Figure 25. Aluminium hose adapters



11336_00

Figure 26. External thread of hose adapter

For chasses CH3 and CH4, the standard delivery includes fast connectors of type 'Tema', series 1300 or 1900. The fast connectors are available as option also for CH5, CH6, and CH7.

Table 17. Liquid connector types (all pressure values at nominal flow)

Chassis	Thread on element (internal) BSPP*	Connector type or hose type	Thread (cust.) BSPP**	Max. pressure (entire system)	Pressure loss, (fast connector + element)	Pressure loss, (hoses + element)
CH3	G3/8"	1300NE2 1/4"		6 bar	0.25 bar	
CH4	G3/8"	1300NE2 1/4"		6 bar	0.25 bar	
CH5	G3/4"	Technobel 16*23.5	G1/2"	6 bar		0.2 bar
CH6	G3/4"	Technobel 16*23.5	G1/2"	6 bar	See Table 18	See Table 18
CH7	G3/4"	Technobel 16*23.5	G1/2"	6 bar	See Table 19	See Table 19

* Use sealing (e.g. Usit-R Metal washer-rubber sealing) for this type of connection according to ISO standard 228-1.

** Use sealant or sealing tape for this type of connection.

The coolant hoses are inserted in 1400 mm UL94V0 approved conduits (type HFX40). The purpose of the protection tubes is to stop leakage from going into the electronics and live parts. The protection tubes guide possible leakage into a safe place, for example, the bottom of the cabinet, where it is detected.



15643_00

Figure 27. Coolant hoses with protection tubes

5.2.5.1 Connecting the hoses

Connect the hose to its counterpart (screw connector or fast connector) on the cooling element of the AC drive/inverter. The coolant inlet connector is the one closer to the mounting plate and the outlet connector the one closer to the face of the drive, see Figure 28. When you make the connection of the line hose, avoid any twisting of the hose on the element.

Use a 25 mm torque wrench to tighten the hoses to torque 25 Nm.

In order to prevent water from spraying in the installation room we also recommend to wrap cloth around the connection on installing.

When the coolant hose is mounted on the hose adapter, pull the protection tube over the adapter, and fix it in place with the metal clip. See Figure 29.

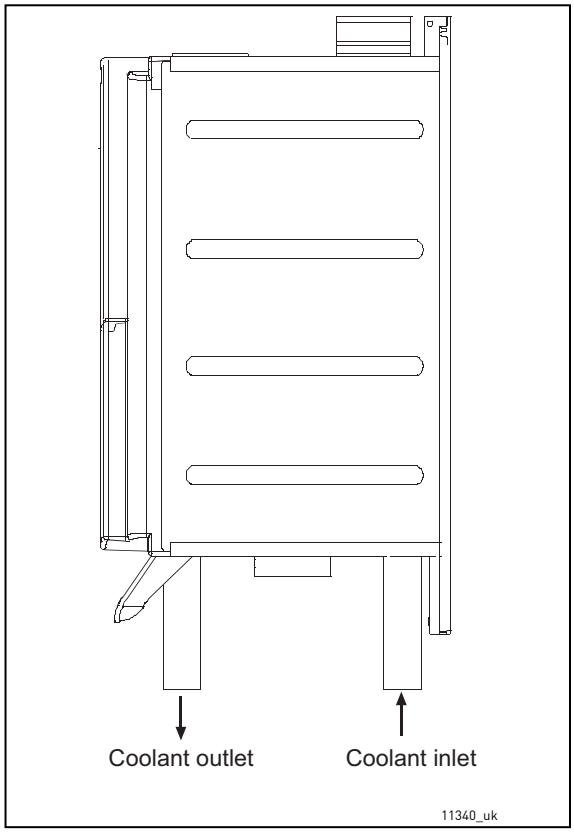

Figure 28. Direction of coolant circulation

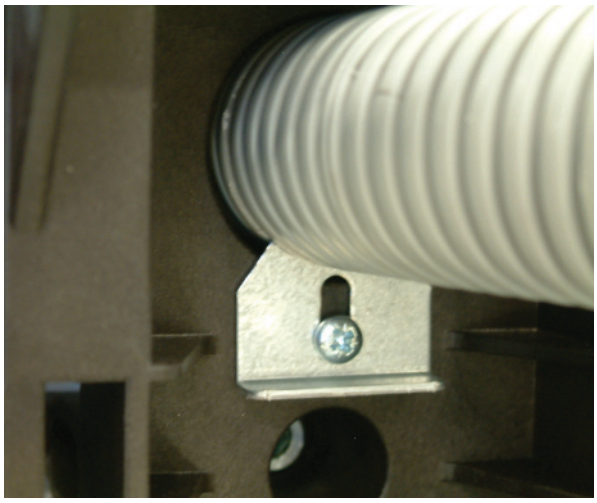

Figure 29. Protection tube fixing clip



Figure 30. Example installation of water hoses

5.2.5.2 Pressure losses

Table 18. Pressure losses; CH6x with standard 1.5 m hoses and optional fast connectors TEMA

Volume flow rate (l/min)	Pressure loss; Tema, inflow (bar)	Pressure loss; inflow hose (bar)	Pressure loss; element (bar)	Pressure loss; outflow hose: (bar)	Pressure loss; Tema, outflow (bar)	Pressure loss total (inflow hose, element and outflow hose) (bar)	Pressure loss total (Tema, inflow and outflow hoses and element) (bar)
40.0	0.59	0.30	0.28	0.29	0.51	0.87	1.96
30.0	0.30	0.17	0.16	0.16	0.25	0.49	1.04
20.0	0.10	0.09	0.08	0.07	0.09	0.24	0.43
17.0	0.06	0.07	0.06	0.03	0.07	0.16	0.29

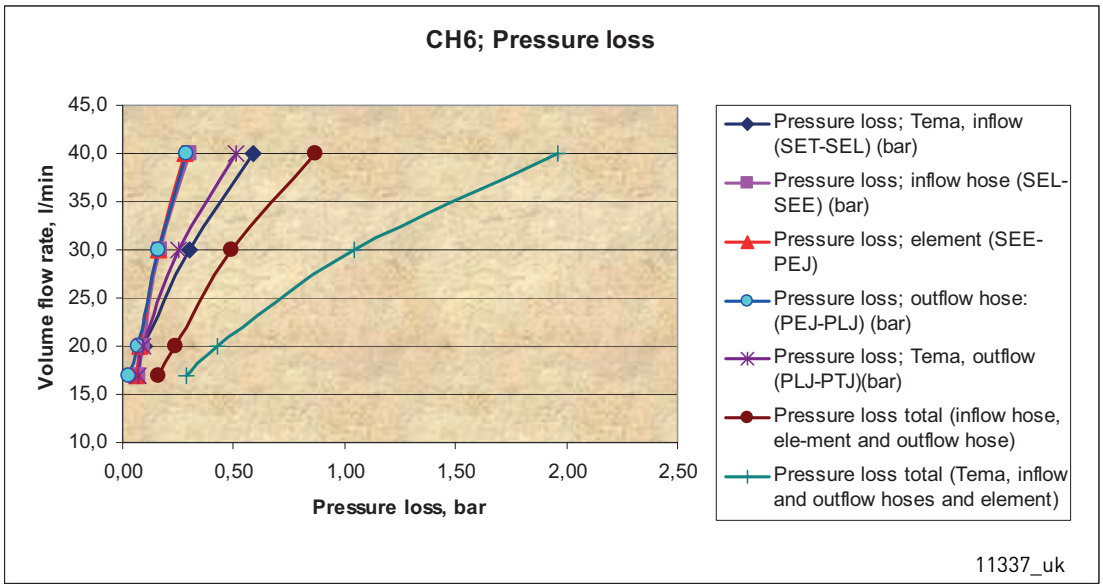

Figure 31. Pressure loss, CH6x

Table 19. Pressure losses; CH7x (16) with standard 1.5 m hoses and optional fast connectors TEMA

Volume flow rate (l/min)	Pressure loss; Tema, inflow (bar)	Pressure loss; inflow hose (bar)	Pressure loss; element (bar)	Pressure loss; outflow hose: (bar)	Pressure loss; Tema, outflow (bar)	Pressure loss total (inflow hose, element and outflow hose) (bar)	Pressure loss total (Tema, inflow and outflow hoses and element) (bar)
40.0	0.61	0.30	0.28	0.28	0.50	0.87	1.97
30.0	0.31	0.17	0.17	0.16	0.26	0.50	1.07
20.0	0.11	0.09	0.08	0.07	0.10	0.24	0.44

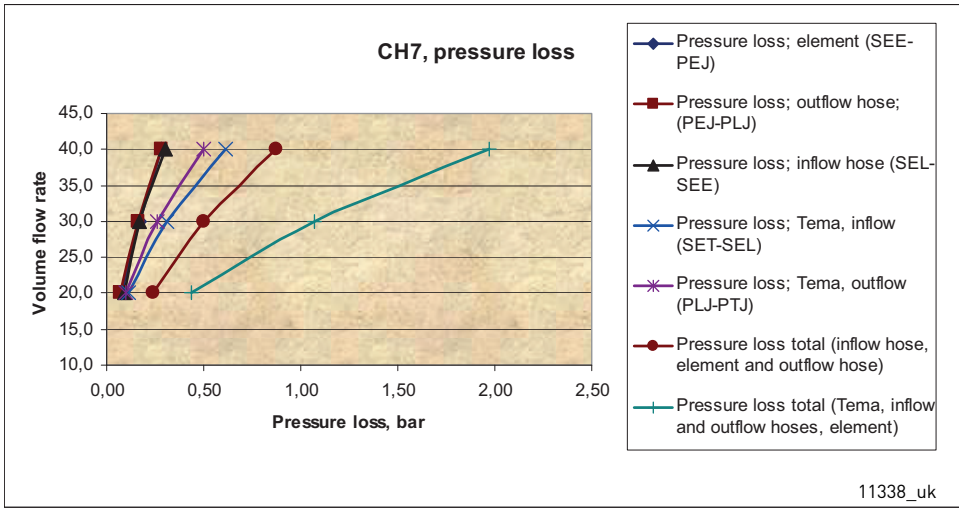

Figure 32. Pressure loss, CH7x

5.2.5.3 Cooling system components

Below you will find a simplified example of the cooling system as well as an example of the connections between the AC drives and the cooling system.

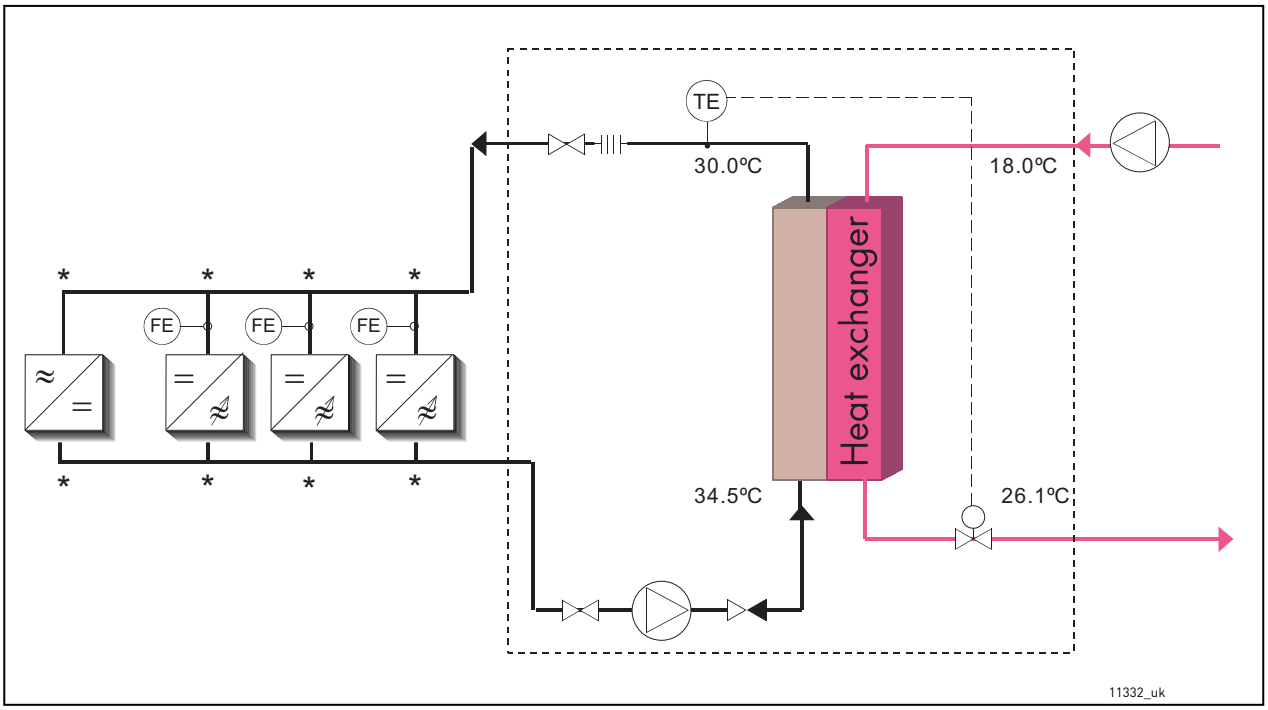

Figure 33. Example of cooling system

To facilitate the cleaning and venting of the coolant circulation, we recommend you to install a bypass valve in the main line and valves at each AC drive inlet. Open the bypass valve and shut the valves to the AC drive when cleaning and airing the system. On commissioning the system, the bypass valve must be closed and the valves to the AC drives opened.

We recommend to equip the cooling system with pressure and flow supervision (FE). The flow supervision can be connected to digital input function External fault. If the coolant flow is found too low, the AC drive is stopped.

The flow supervision and other actuators, for example, a constant flow valve, are available as options. The options must be mounted at the junction of the main line and the branching line to the element, indicated with an asterisk (*) in Figure 33.

Due to high pressure in the line hose, it is recommended to equip the liquid line with a shut-off valve, which makes the connection easier.

It is also recommended to equip the pipe branches to the cooling elements with valves.

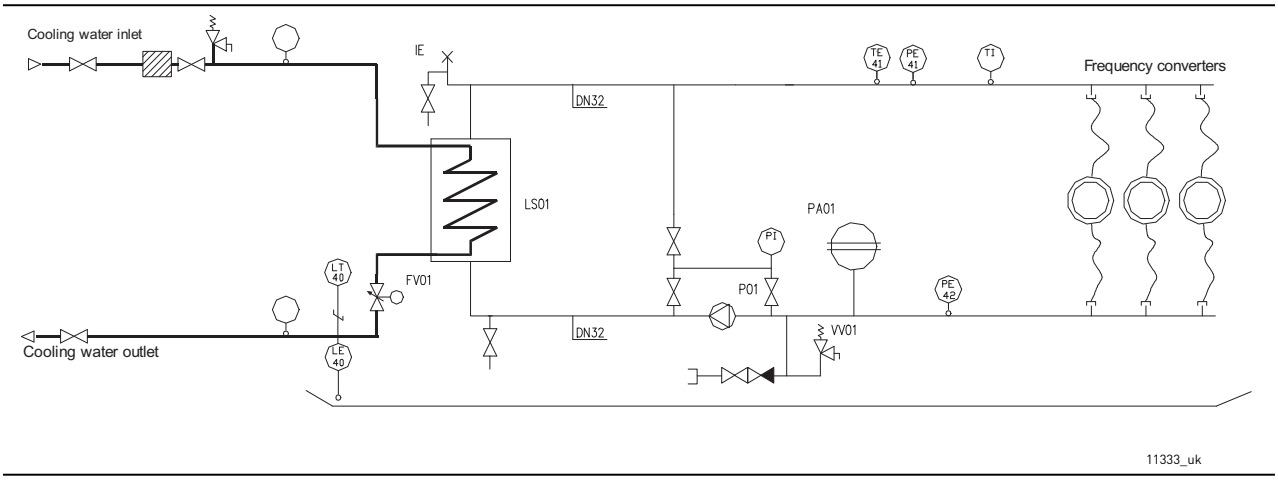

Figure 34. Example: PI-diagram of the cooling system and the connections

5.2.5.4 Installation of flow switch

It is recommended to install flow supervision in the liquid cooling system. You can order the flow switch as an option.

We recommend to mount the flow switch on the inflow side of the system (see Figure 33). Pay attention to the direction of flow. The switch reaches the highest accuracy when it is mounted in horizontal position. If mounted vertically, the mechanical sensor is affected by the Earth's gravity which reduces the accuracy according to the data given in Table 20.

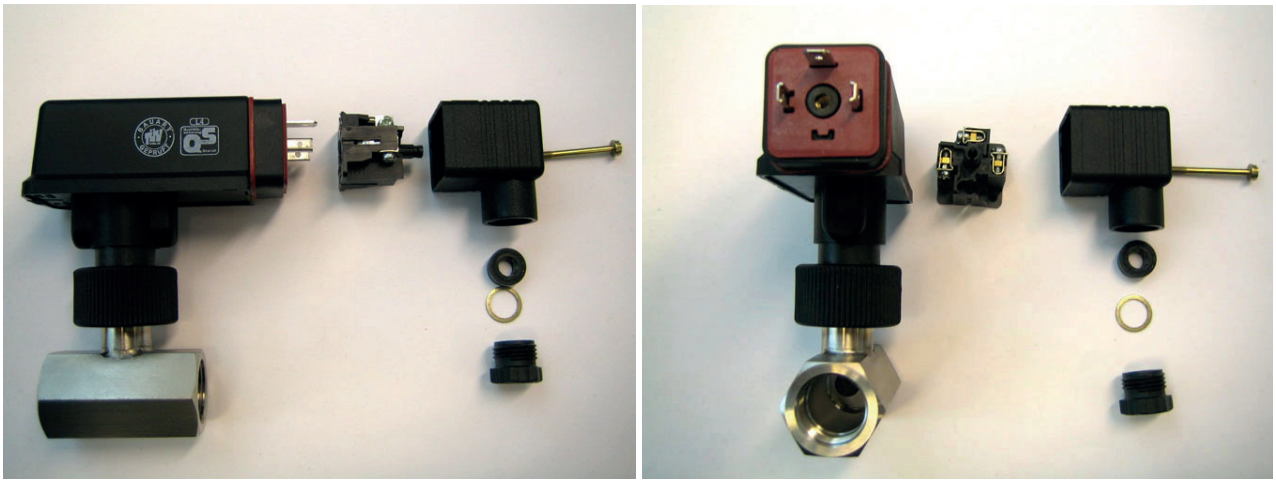

11339_00

Figure 35. Flow switch: Hose connection, fast connector (electrical), fast connector lock screw, cable seal and clamp

Table 20. Flow switch data

Hose connection	G1/2" female, internal thread ISO228-1
Closing	The switch closes if the flow exceeds 20 l/min.
Switching accuracy: **Horizontal installation** **Vertical installation**	 –5...+15% (19...23 l/min) ±5% (19...21 l/min)

5.2.6 CONDENSATION

Condensation on the cooling plate of the VACON® NX Liquid-cooled drive must be avoided. Therefore, the temperature of the cooling liquid must be kept higher than the temperature of the electrical room. Use the graph below to determine if the drive operating conditions (combination of room temperature, humidity and cooling liquid temperature) are safe, or, to choose the allowed temperature for the cooling liquid.

The conditions are safe when the point is below the respective curve. If not, take adequate precautions by decreasing the room temperature and/or the relative humidity or increase the cooling liquid temperature. Note that increasing the temperature of the cooling liquid above figures in loadability charts decreases the nominal output current of the drive. The below curves are valid at sea level altitude (1013 mbar).

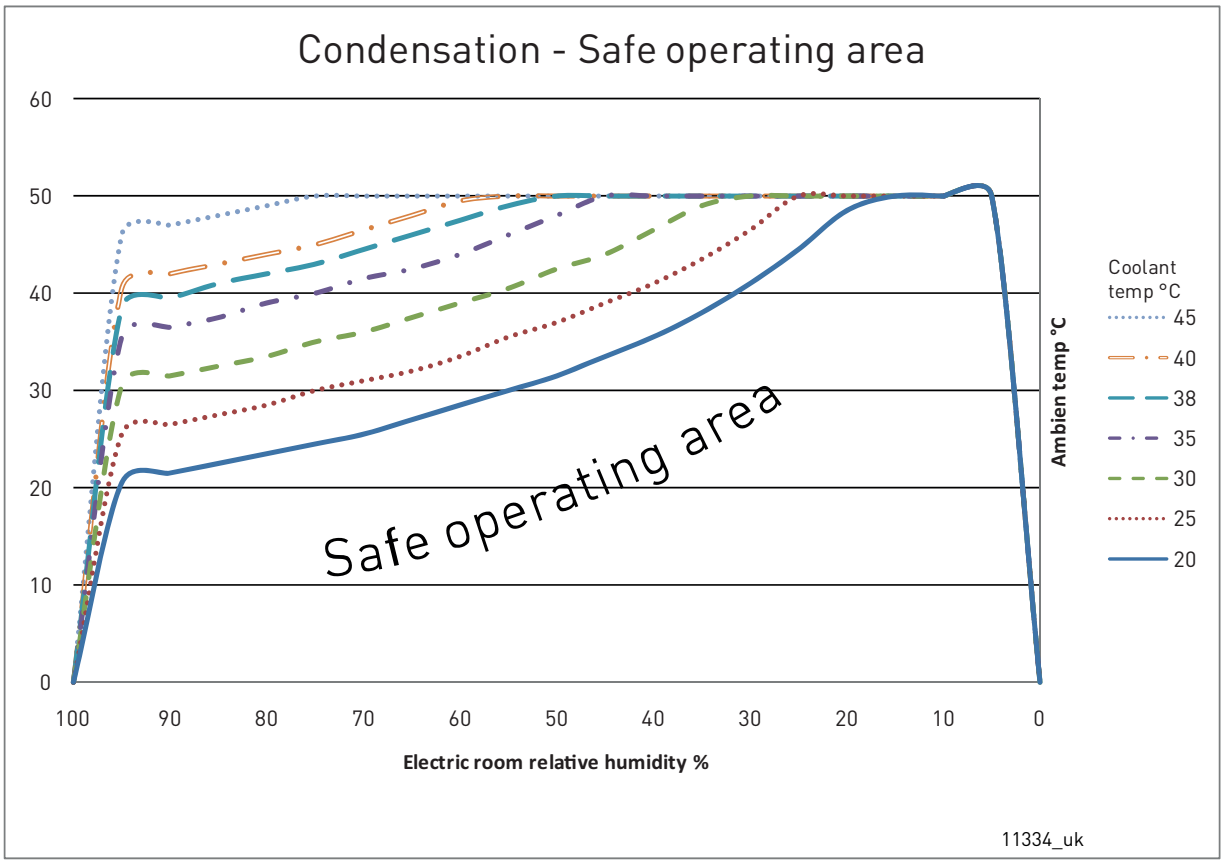

Figure 36. Safe operating conditions in relation to condensation

Example:

If the temperature of the electric room is 30 °C, the relative humidity is 40% and the temperature of the cooling liquid is 20 °C (the lowest curve in Figure 36), then the drive operating conditions are safe.

However, if the room temperature were to rise to 35 °C and the relative humidity to 60%, then the operating conditions of the drive would no longer be safe. In this case, to reach safe operating conditions, the air temperature should be cooled to 28 °C or lower. If it is not possible to lower the room temperature, then the temperature of the cooling liquid should be raised to at least 25 °C.

5.3 DRIVE DERATING

The tables below state the maximum coolant temperatures for VACON® Liquid-cooled drives at given switching frequencies and modulator types. Drive derating is required if the maximum temperatures are exceeded or nominal water flow is not reached. If other than nominal water or stated coolant mixture is used, check the rating from Table 15. If the ratings are needed in other conditions or other drive types (for example, grid converter or DC/DC converter) use the MyDrive® Select tool or contact the nearest Danfoss Drives office to select the optimum rating.

NOTE! If the heat sink is nickel-coated you must allow for a 2 °C derating of values in the tables below. This applies only to the two biggest drive sizes of each chassis!

NOTE! 10% safety margin left for maximum coolant temperature.

Table 21. Maximum temperatures of coolant for water/glycol mixture 80:20

AFE default settings (Modulator type 2 / switching frequency 3.6 kHz) Supply voltage 380–500 V AC			
Chassis	**Type**	**Max coolant temperature [°C] Supply voltage 400 V**	**Max coolant temperature [°C] Supply voltage 500 V**
CH61	NXP0385_5	45	43
CH62	NXP0730_5	44	42
CH63	NXP1150_5	44	42
CH64	NXP2060_5	44	42
CH64	NXP2300_5	42	40

Table 22. Maximum temperatures of coolant for water/glycol mixture 80:20

Motor drive default settings (Modulator type 1 / switching frequency 1.5 kHz) Supply voltage 380–500 V AC			
Chassis	**Type**	**Max coolant temperature [°C] Supply voltage 400 V**	**Max coolant temperature [°C] Supply voltage 500 V**
CH61	NXP0385_5	48	46
CH62	NXP0730_5	46	44
CH63	NXP1150_5	45	43
CH64	NXP2060_5	48	46
CH64	NXP2300_5	44	42
CH72	NXP0730_5	39	37
CH74	NXP2060_5	45	43
CH74	NXP2300_5	42	40

Table 23. Maximum temperatures of coolant for water/glycol mixture 80:20

AFE default settings (Modulator type 2 / switching frequency 3.6 kHz) Supply voltage 525–690 V AC			
Chassis	**Type**	**Max coolant temperature [°C] Supply voltage 525 V**	**Max coolant temperature [°C] Supply voltage 690 V**
CH61	NXP0261_6	49	47
CH62	NXP0502_6	45	43
CH63	NXP0750_6	42	40
CH64	NXP1500_6	47	45

Table 24. Maximum temperatures of coolant for water/glycol mixture 80:20

Motor drive default settings (Modulator type 1 / switching frequency 1.5 kHz) Supply voltage 525–690 V AC			
Chassis	**Type**	**Max coolant temperature [°C] Supply voltage 525 V**	**Max coolant temperature [°C] Supply voltage 690 V**
CH61	NXP0261_6	52	49
CH62	NXP0502_6	50	47
CH63	NXP0750_6	50	47
CH64	NXP1500_6	50	47
CH72	NXP0502_6	44	41
CH74	NXP1500_6	44	41

Table 25. Maximum temperatures of coolant for water/glycol mixture 80:20

Supply voltage 400-690 VAC			
Chassis	**Type**	**Max coolant temperature [°C] Supply voltage 400 V**	**Max coolant temperature [°C] Supply voltage 690 V**
CH 60	NXN2000_6	43	43

5.4 INPUT CHOKES

The input choke has several functions in the VACON® NX Liquid-cooled AC drive. Connection of the input choke is necessary except if you have a component in your system that performs the same tasks (e.g. a transformer). The input choke is needed as an essential component for motor control, to protect the input and DC-link components against abrupt changes of current and voltage as well as to function as a protection against harmonics. In drives with multiple parallel line rectifiers (CH74) AC-chokes are required to balance the line current between the rectifiers.

The input chokes are included in the standard delivery of VACON® Liquid-cooled AC drives (not inverters). However, you can also order your AC drive without the choke.

The VACON® input chokes listed in the following chapters are meant for supply voltages of 400–500 V and 525–690 V.

The use of liquid-cooled input chokes increases the proportion of the system's total power losses directed to coolant. Therefore the manufacturer recommends the use of liquid-cooled input chokes.

The specified minimum/maximum flow rate for liquid-cooled input chokes is 4–12 l/min.

5.4.1 GROUNDING OF INPUT CHOKES

The grounding of the input chokes can be made optionally from top or bottom. See Figure 37. It is recommended to use M12 bolt with tightening torque 70 Nm.

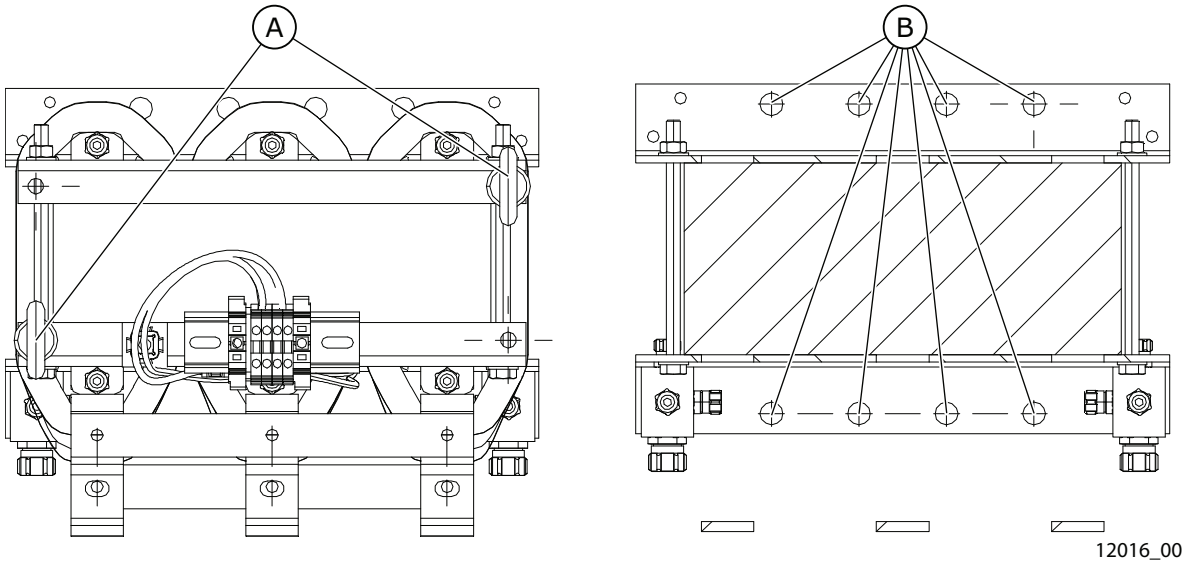

Figure 37. The grounding points for input chokes

A. Grounding points from the top
B. Grounding points from the lower bracket

5.4.2 LIQUID-COOLED INPUT CHOKES

Table 26. Liquid-cooled input choke dimensioning, 6-pulse supply

AC drive types (400–500 V AC)	Chokes per drive	AC drive types (690 V AC)	Chokes per drive	Choke type	Thermal current [A]	Nominal inductance [µH] A/B*	Power loss c/a/T [W] **
0168...0261	1	0170...0261	1	CHK-0261-6-DL	261	139/187	527/323/850
0300...0385	1	0325...0385 0820...1180 1850...2340	1 3 6	CHK-0400-6-DL	400	90/126	616/484/1100
0460...0520 1370 (CH74)	1 3	0416...0502 1300...1500 2700...3100	1 3 6	CHK-0520-6-DL	520	65/95	826/574/1400
0590...0650 1640	1 3	0590...0650 1700	1 3	CHK-0650-6-DL	650	51/71	732/468/1200
0730 2060	1 3	0750	1	CHK-0750-6-DL	750	45/61	884/816/1700
0820 2300	1 3	-	-	CHK-0820-6-DL	820	39/53	969/731/1700
0920...1030	1	-	-	CHK-1030-6-DL	1030	30/41	1073/777/1850
1150	1	-	-	CHK-1150-6-DL	1150	26/36	1218/882/2100
2470...2950	6	-	-	CHK-0520-6-DL	520	65/95	826/574/1400
3710	6	-	-	CHK-0650-6-DL	650	51/71	732/468/1200
4140	6	-	-	CHK-0750-6-DL	750	45/61	884/816/1700

* Inductances for different supply voltages; A = 400...480 V AC, B = 500...690 V AC. See page 80.
** Losses for one input choke. C = power loss into coolant, A = power loss into air, T = total power loss. The total power loss of the AC choke is proportional to the square of the operating current. That is, the power loss level is 25% from nominal at 50% operating point.

Table 27. Liquid-cooled input choke dimensioning, 12-pulse supply

AC drive types (400–500 V AC)	AC drive types (690 V AC)	Choke type (2 chokes needed)	Thermal current [A]	Nominal inductance [µH] A/B*	Power loss c/a/T [W] **
0460...0520	0325...0502	CHK-0261-6-DL	261	139/187	527/323/850
0590...0730	0590...0750	CHK-0400-6-DL	400	90/120	616/484/1100
0820...1030	0820...1030 **1850**	CHK-0520-6-DL	520	65/95	826/574/1400
1150 **2300** **2470**	1180...1300 **2120...2340**	CHK-0650-6-DL	650	51/71	732/468/1200

Table 27. Liquid-cooled input choke dimensioning, 12-pulse supply

AC drive types (400–500 V AC)	AC drive types (690 V AC)	Choke type (2 chokes needed)	Thermal current [A]	Nominal inductance [µH] A/B*	Power loss c/a/T [W] **
1370 **2950**	1370 **2700**	CHK-0750-6-DL	750	45/61	884/816/1700
1640	1500 **3100**	CHK-0820-6-DL	820	39/53	969/731/1700
2060 **3710**	1700	CHK-1030-6-DL	1030	30/41	1073/777/1850
4140	-	CHK-1150-6-DL	1150	26/36	1218/882/2100

AC drive types written in bold require 2 chokes of the designated kind per unit (4 in total).
* Inductances for different supply voltages; A = 400...480 V AC, B = 500...690 V AC. See page 80.
** Losses for one input choke. C = power loss into coolant, A = power loss into air, T = total power loss. The total power loss of the AC choke is proportional to the square of the operating current. That is, the power loss level is 25% from nominal at 50% operating point.

5.4.3 AIR-COOLED INPUT CHOKES

Table 28. Air-cooled input choke dimensioning, 6-pulse supply

AC drive types (400–500 V AC)	Chokes per drive	AC drive types (690 V AC)	Chokes per drive	Choke type	Thermal current [A]	Nominal inductance [µH] A/B*	Calculated loss [W]**
0016...0022	1	-	1	CHK0023N6A0	23	1900	145
0031...0038	1	-	1	CHK0038N6A0	38	1100	170
0045...0061	1	-	1	CHK0062N6A0	62	700	210
0072...0087	1	-	1	CHK0087N6A0	87	480	250
0105...0140	1	-	1	CHK0145N6A0	145	290	380
0168...0261	1	0170...0261	1	CHK0261N6A0	261	139/187	750
0300...0385	1	0325...0385 0820...1180 1850...2340	1 3 6	CHK0400N6A0	400	90/126	1060
0460...0520 1370 (CH74)	1 3	0416...0502 1300...1500 2700...3100	1 3 6	CHK0520N6A0	520	65/95	1230
0590...0650 1640	1 3	0590...0650 1700	1 3	CHK0650N6A0	650	51/71	1260
0730 2060	1 3	0750	1	CHK0750N6A0	750	45/61	1510
0820 2300	1 3	-	-	CHK0820N6A0	820	39/53	1580
0920...1030	1	-	-	CHK1030N6A0	1030	30/41	1840
1150	1	-	-	CHK1150N6A0	1150	26/36	2200
2470...2950	6	-	-	CHK0520N6A0	520	65/95	810
3710	6	-	-	CHK0650N6A0	650	51/71	890
4140	6	-	-	CHK0750N6A0	750	45/61	970

* Inductances for different supply voltages; A = 400...480 V AC, B = 500...690 V AC. See page 80.
** Losses for one input choke. The total power loss of the AC choke is proportional to the square of the operating current. That is, the power loss level is 25% from nominal at 50% operating point.

Table 29. Air-cooled input choke dimensioning, 12-pulse supply

AC drive types (400–500 V AC)	AC drive types (690 V AC)	Choke type (2 chokes needed)	Thermal current [A]	Nominal inductance [µH] A/B*	Calculated loss [W]**
0460...0520	0325...0502	CHK0261N6A0	261	139/187	750
0590...0730	0590...0750	CHK0400N6A0	400	90/120	1060
0820...1030	0820...1030 **1850**	CHK0520N6A0	520	65/95	1230
1150 **2300** **2470**	1180...1300 **2120...2340**	CHK0650N6A0	650	51/71	1260

Table 29. Air-cooled input choke dimensioning, 12-pulse supply

AC drive types (400–500 V AC)	AC drive types (690 V AC)	Choke type (2 chokes needed)	Thermal current [A]	Nominal inductance [µH] A/B*	Calculated loss [W]**
1370 **2950**	1370 **2700**	CHK0750N6A0	750	45/61	1510
1640	1500 **3100**	CHK0820N6A0	820	39/53	1580
2060 **3710**	1700	CHK1030N6A0	1030	30/41	1840
4140	-	CHK1150N6A0	1150	26/36	2200

AC drive types written in bold require 2 chokes of the designated kind per unit (4 in total).
* Inductances for different supply voltages; A = 400...480 V AC, B = 500...690 V AC. See page 80.
** Losses for one input choke. The total power loss of the AC choke is proportional to the square of the operating current. That is, the power loss level is 25% from nominal at 50% operating point.

5.4.4 INSTALLATION OF THE INPUT CHOKES

There are two types of input choke connection in VACON® NX Liquid-cooled drives. The two smallest sizes (CH31, CH32; up to 61 A) have terminal block connection whereas the bigger sizes use busbar connection. Examples of connections and the input choke dimensions below.

5.4.4.1 Connection examples and dimensions for liquid-cooled input chokes

Always connect the supply cables to the choke terminals marked with #1 (see Figure Figure 38). Choose the AC drive side connection according the following table.

The limb in the middle has two sensors for overtemperature protection. The contacts are normally closed (NC switches). A warning is issued when the temperature exceeds 140 °C and a fault when the temperature exceeds 150 °C.

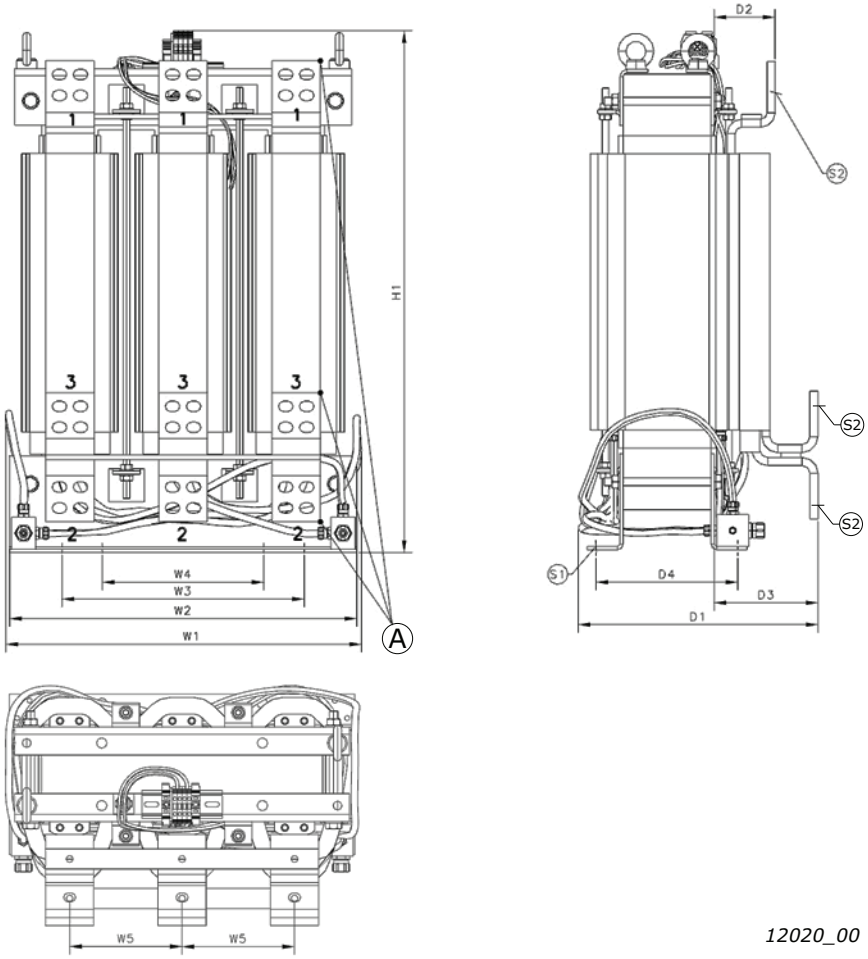

A. Terminal number

Table 30.

Supply voltage	AC drive connection (terminal no.)
400-480 V AC	2
500 V AC	3
525-690 V AC	3

Figure 38. Example of liquid-cooled input chokes for VACON® NX Liquid-cooled. Sizes 261–1150 A

Table 31. Liquid-cooled input choke dimensions; Sizes 261–1150 A

Choke type	H1 [mm]	W1 [mm]	W2 [mm]	W3 [mm]	W4 [mm]	W5 [mm]	D1 [mm]	D2 [mm]	D3 [mm]	D4 [mm]	S1 [mm]	S2 [mm]	Weight [kg]
261	500	308	305	150	50	100	270	62	91	217	13	11x15	70
400	497	308	305	150	50	100	276	62	97	217	13	11x15	75
520	502	390	380	250	150	115	276	64	97	217	13	11x15	104

Choke type	H1 [mm]	W1 [mm]	W2 [mm]	W3 [mm]	W4 [mm]	W5 [mm]	D1 [mm]	D2 [mm]	D3 [mm]	D4 [mm]	S1 [mm]	S2 [mm]	Weight [kg]
650	505	450	430	300	200	140	284	64	105	217	13	11x15	121
750	557	450	430	300	200	140	284	64	105	217	13	11x15	135
820	506	450	430	300	200	140	282	64	102	217	13	11x15	118
1030	642	450	430	300	200	140	274	76	130	185	13	13x18	124
1150	647	450	430	300	200	140	308	76	130	217	13	13x18	162

5.4.4.2 Connection examples and dimensions for air-cooled input chokes

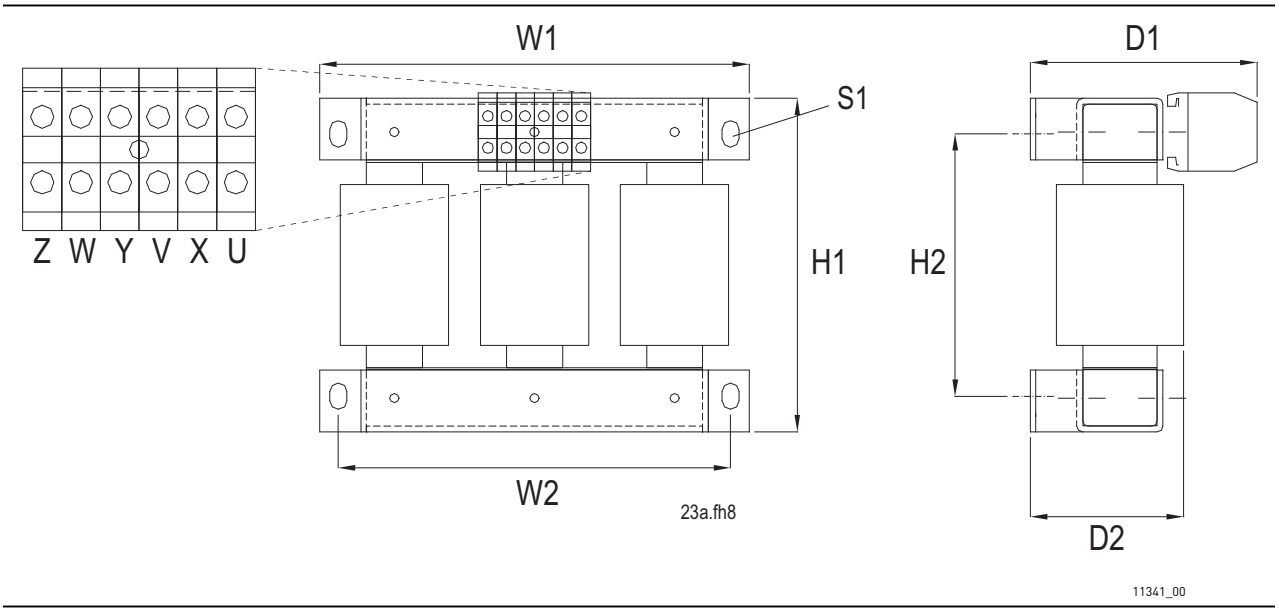

Figure 39. Example of air-cooled input chokes for VACON® NX Liquid-cooled. Sizes up to 62 A

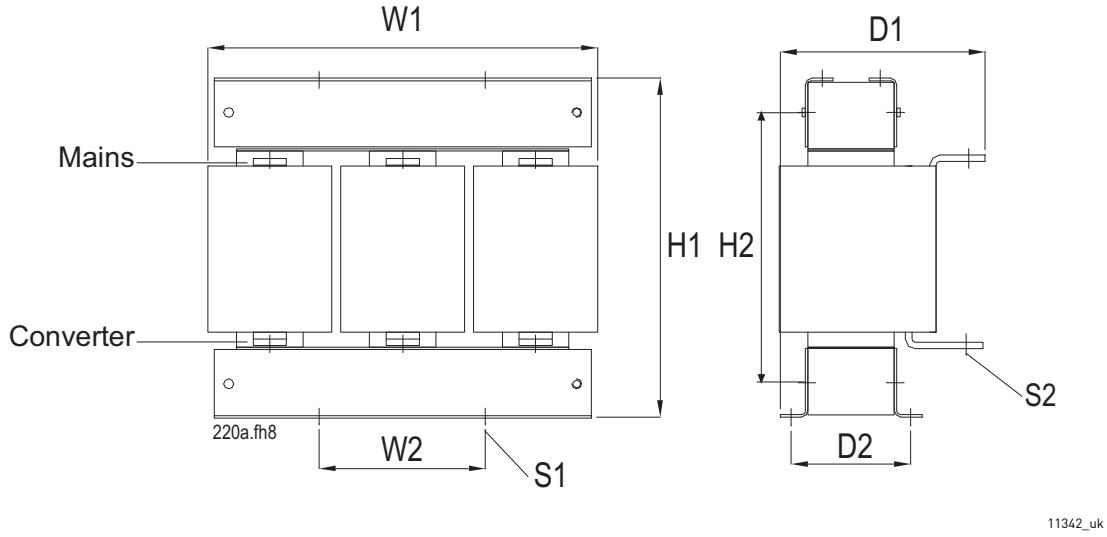

Figure 40. Example of air-cooled input chokes for VACON® NX Liquid-cooled. Sizes 87–145 A and 590A

Table 32. Air-cooled input choke dimensions; Sizes 23–145 A and 590 A

Choke type	H1 [mm]	H2 [mm]	W1 [mm]	W2 [mm]	D1 [mm]	D2 [mm]	S1 [mm]	S2 [mm]	Weight [kg]
CHK0023N6A0	178	140	230	210	121	82	9*14 (4pcs)		10
CHK0038N6A0	209	163	270	250	NA	NA	9*14 (6pcs)		15
CHK0062N6A0	213	155	300	280	NA	NA	9*14 (4pcs)		20
CHK0087N6A0	232	174	300	280	170		9*14 (4pcs)	Ø9 (6 pcs)	26
CHK0145N6A0	292	234	300	280	185		9*14 (4pcs)	Ø9 (6 pcs)	37
CHK0590N6A0	519		394	316	272	165	10*35 (4pcs)	Ø11 (6 pcs)	125

Always connect the supply cables to the choke terminals marked with #1 (see Figure 41). Choose the AC drive connection according to the following table.

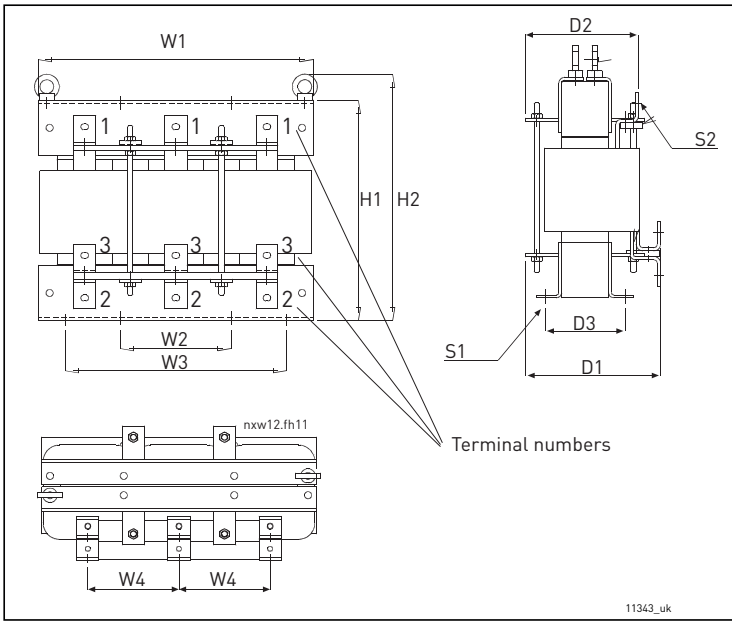

Table 33.

Supply voltage	AC drive connection (terminal no.)
400-480 Vac	2
500 Vac	3
525-690 Vac	3

Figure 41. Example of air-cooled input chokes for VACON® NX Liquid-cooled. Sizes 261–1150 A

Table 34. Air-cooled input choke dimensions; Sizes 261–1150 A

Choke type	H1 [mm]	H2 [mm]	W1 [mm]	W2 [mm]	W3 [mm]	W4 [mm]	D1 [mm]	D2 [mm]	D3 [mm]	S1 [mm]	S2 [mm]	Weight [kg]
CHK0261N6A0	319	357	354	150	275	120	230	206	108	9*14 (8 pcs)	9*14 (9 pcs)	53
CHK0400N6A0	383	421	350	150	275	120	262	238	140	9*14 (8 pcs)	11*15 (9 pcs)	84
CHK0520N6A0	399	446	497	200	400	165	244	204	145	Ø13 (8 pcs)	11*15 (9 pcs)	115
CHK0650N6A0	449	496	497	200	400	165	244	206	145	Ø13 (8 pcs)	11*15 (9 pcs)	130
CHK0750N6A0	489	527	497	200	400	165	273	231	170	Ø13 (8 pcs)	13*18 (9 pcs)	170
CHK0820N6A0	491	529	497	200	400	165	273	231	170	Ø13 (8 pcs)	13*18 (9 pcs)	170

Table 34. Air-cooled input choke dimensions; Sizes 261–1150 A

Choke type	H1 [mm]	H2 [mm]	W1 [mm]	W2 [mm]	W3 [mm]	W4 [mm]	D1 [mm]	D2 [mm]	D3 [mm]	S1 [mm]	S2 [mm]	Weight [kg]
CHK1030N6A0	630	677	497	200	400	165	307	241	170	Ø13 (8 pcs)	13*18 (36 pcs)	213
CHK1150N6A0	630	677	497	200	400	165	307	241	170	Ø13 (8 pcs)	13*18 (36 pcs)	213

5.4.4.3 Instructions for installation of the input chokes

If you have ordered the input chokes for VACON® NX Liquid-cooled separately pay attention to the following instructions:

1. Protect the chokes from dripping water. You may even need to use plexiglass for protection because jets of water may occur when working with the connections.
2. Connection of cables:
   Types CHK0023N6A0, CHK0038N6A0, CHK0062N6A0 (chokes with terminal blocks)
   The terminals are marked with letters U,V, W and X,Y and Z in such an order, however, that terminals U and X, V and Y as well as W and Z form pairs of which one is an input and the other an output. Furthermore, terminals U,V and W must all be used as either input or output. The same applies to terminals X, Y and Z. See Figure 39.

   Example: If you connect the mains cable of one phase to terminal X, the other two phases must be connected to Y and Z. Accordingly, the choke output cables are connected to their corresponding input pairs: phase 1 → U, phase 2 → V and phase 3 → W.

   Other types (chokes with busbar connection)
   Connect the mains cables to the upper busbar connectors (see Figure 40 and Figure 41) with bolts. The cables to the AC drive are bolted to the lower connectors. See Table 32 and Table 34 for bolt sizes.

6. ELECTRICAL CABLING AND CONNECTIONS

6.1 POWER UNIT

How the power connections of VACON® NX Liquid-cooled units are implemented depends on the size of the unit. The smallest VACON® NX Liquid-cooled unit (CH3) has terminal blocks for the connections. In all other units, the connection is established using cables and cable clips or bolting the busbars together. The locations of the terminals are shown in Chapter 6.1.1.

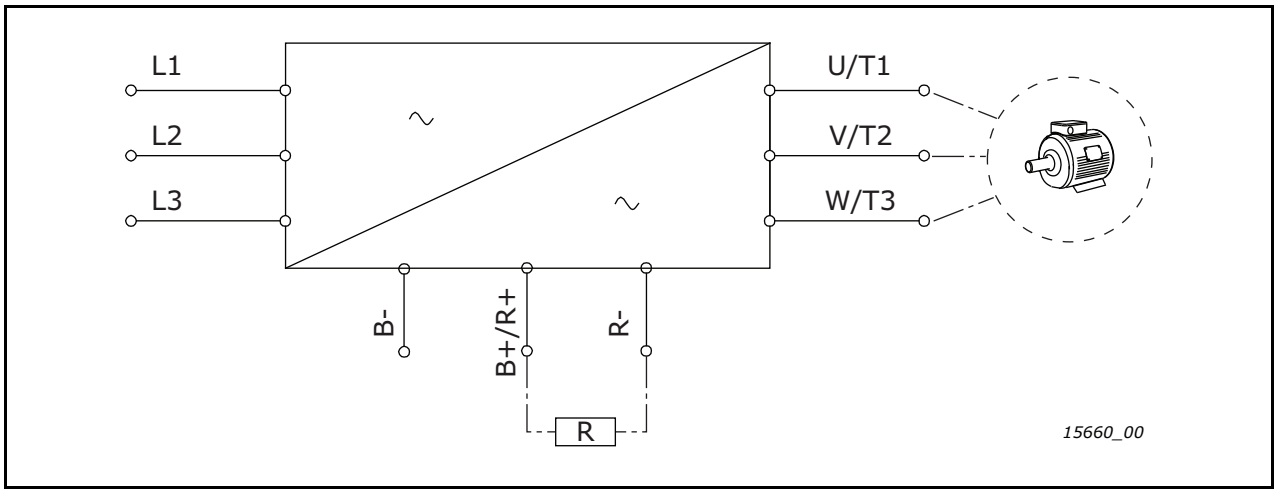

Figure 42. Principal connection diagram for AC drives

NOTE! The brake resistor is available for all sizes (CH3 to CH7). An internal brake chopper is standard equipment in size CH3. For CH72 (only 6-pulse) and CH74, it is available as internal option, while in all other sizes it is optional but installed externally.

NOTE! 12-pulse drives and size CH74 have more than one terminal for each input phase.

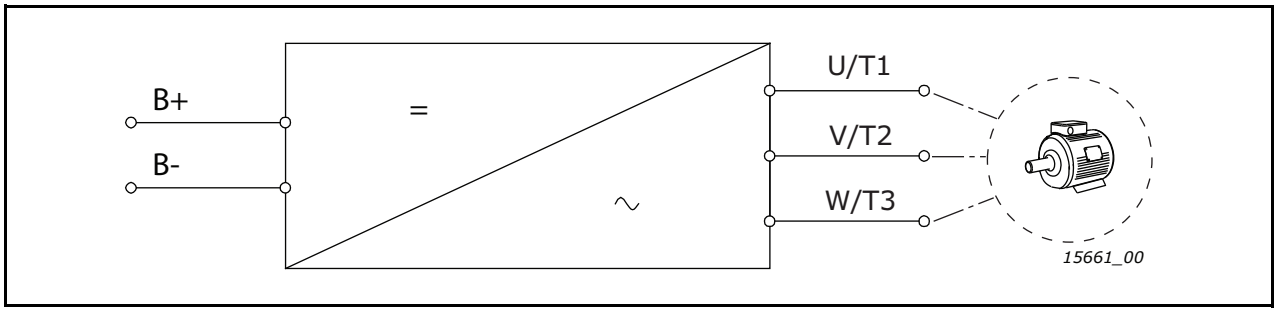

Figure 43. Principal connection diagram for inverter units

For more detailed main circuit diagrams of each VACON® NX Liquid-cooled drive, see Chapter 14.

6.1.1 LOCATION OF THE TERMINALS

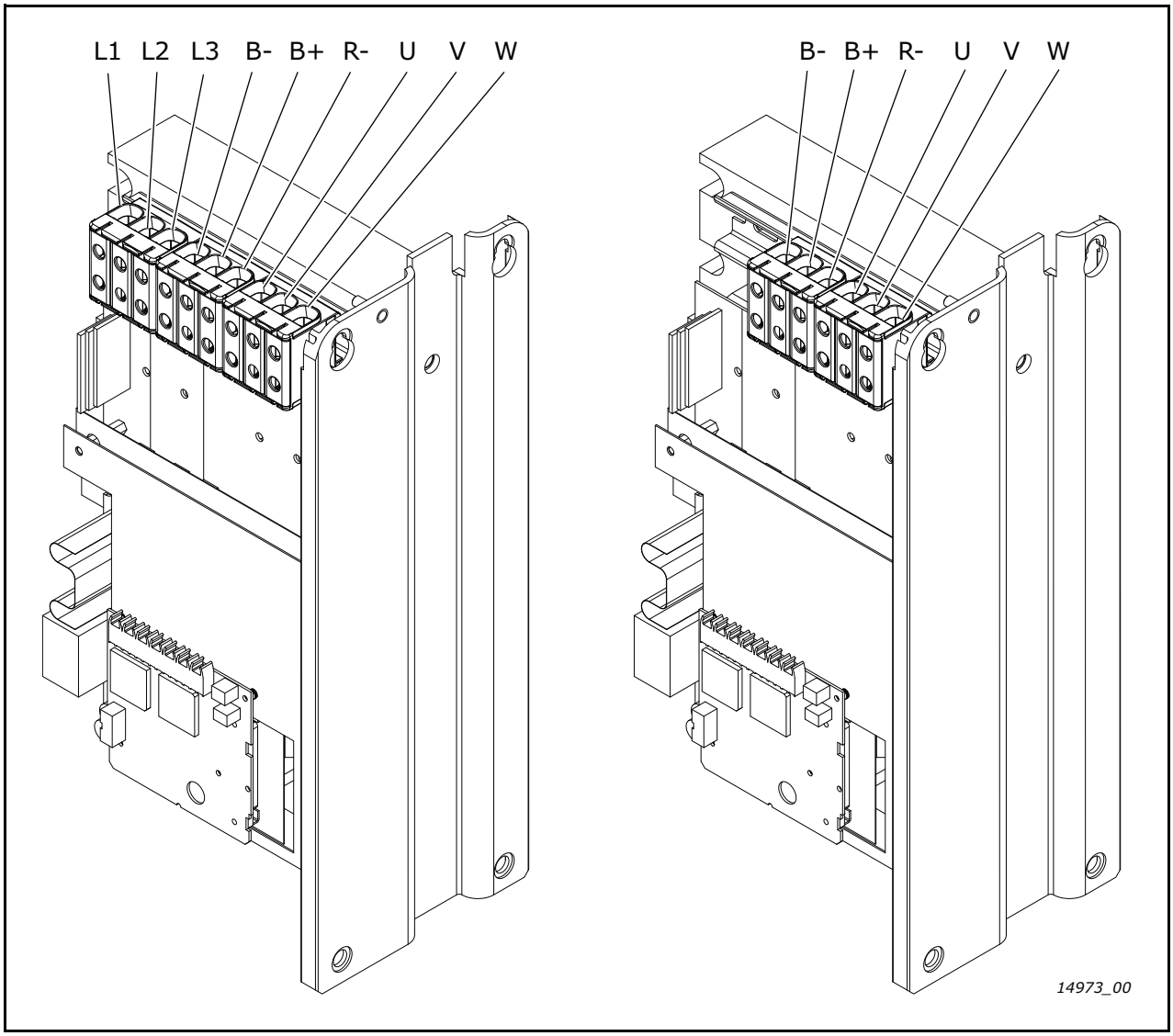

Figure 44. Main terminals in CH3 FC (left) and INU (right)

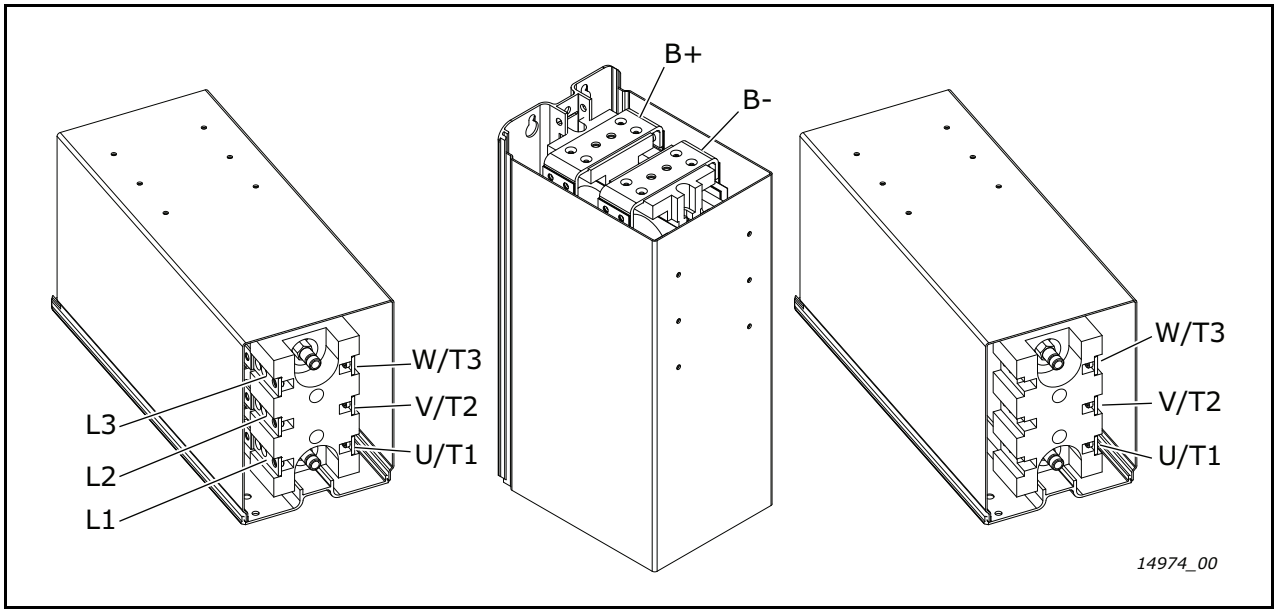

Figure 45. Main terminals in CH4 FC (left) and INU (right).
The DC terminals are the same in FC and INU.

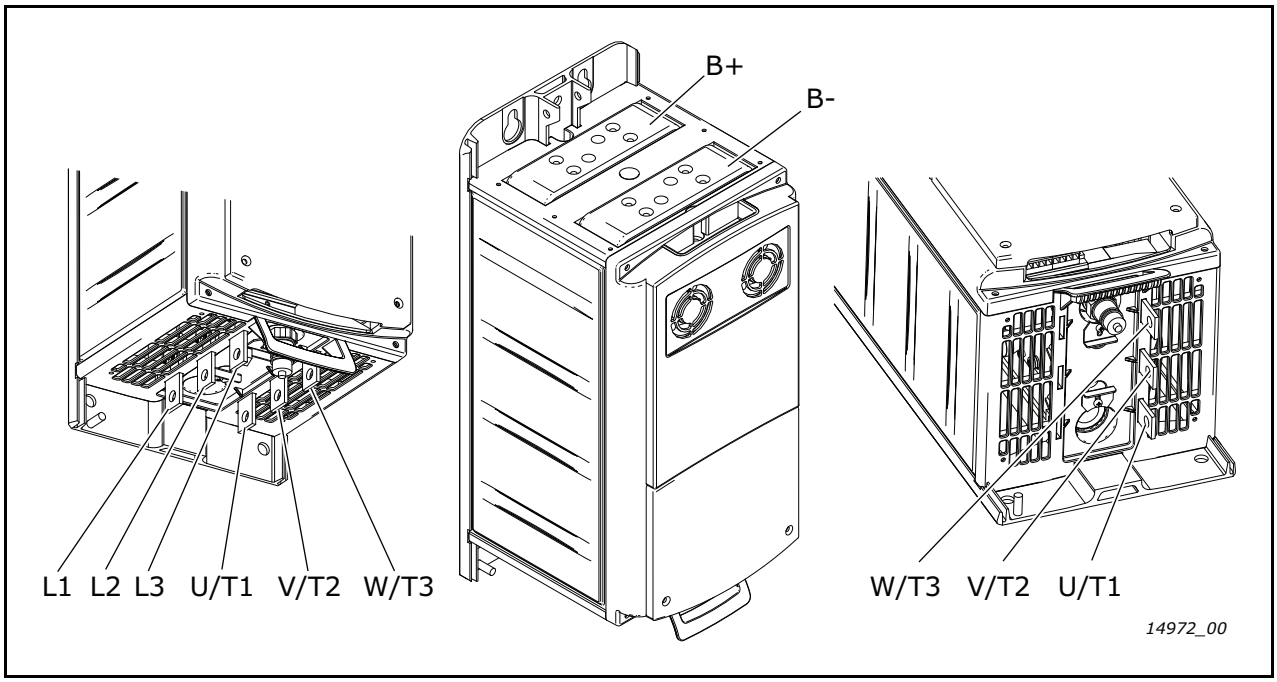

Figure 46. Main terminals in CH5 FC (left) and INU (right).
The DC terminals are the same in FC and INU.

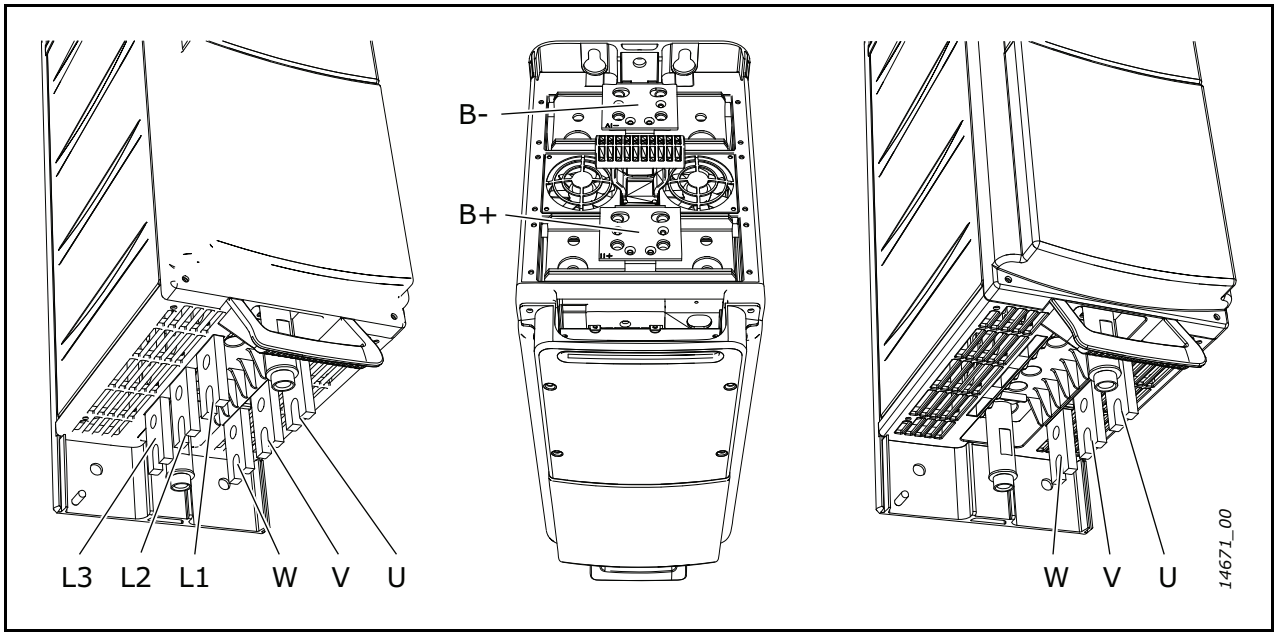

Figure 47. Main terminals in CH61 FC (left) and INU (right).
The DC terminals are the same in FC and INU.

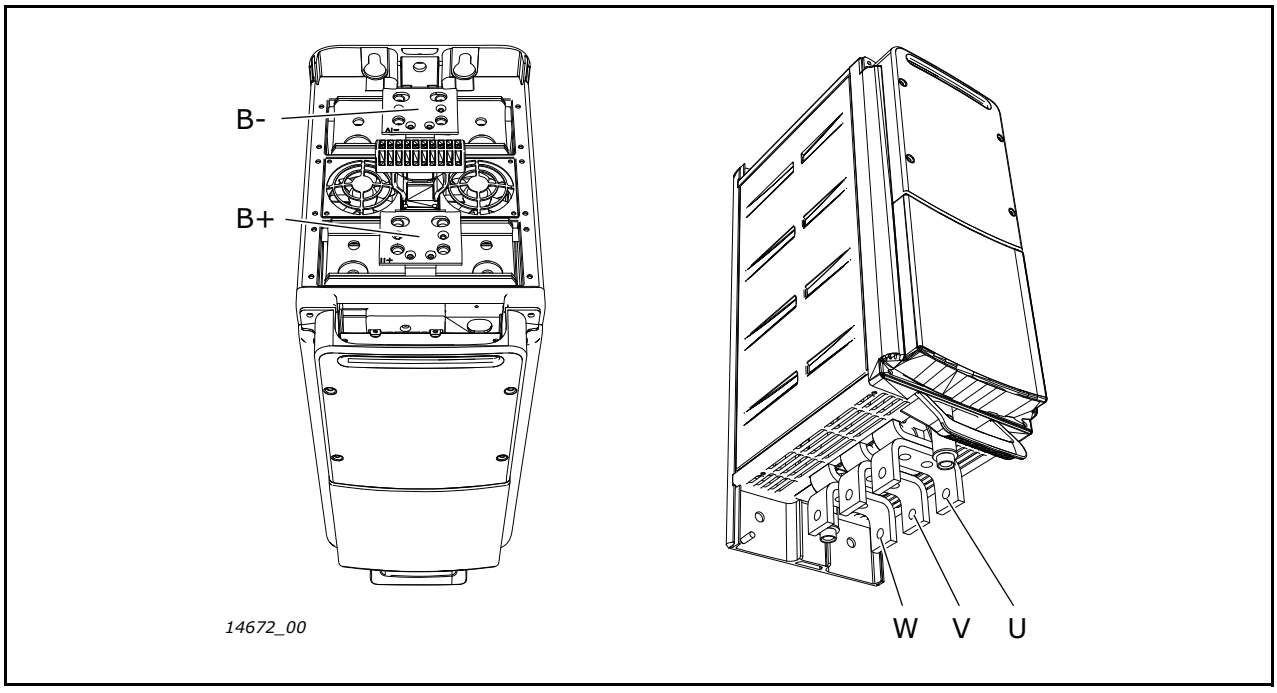

Figure 48. Main terminals in CH62

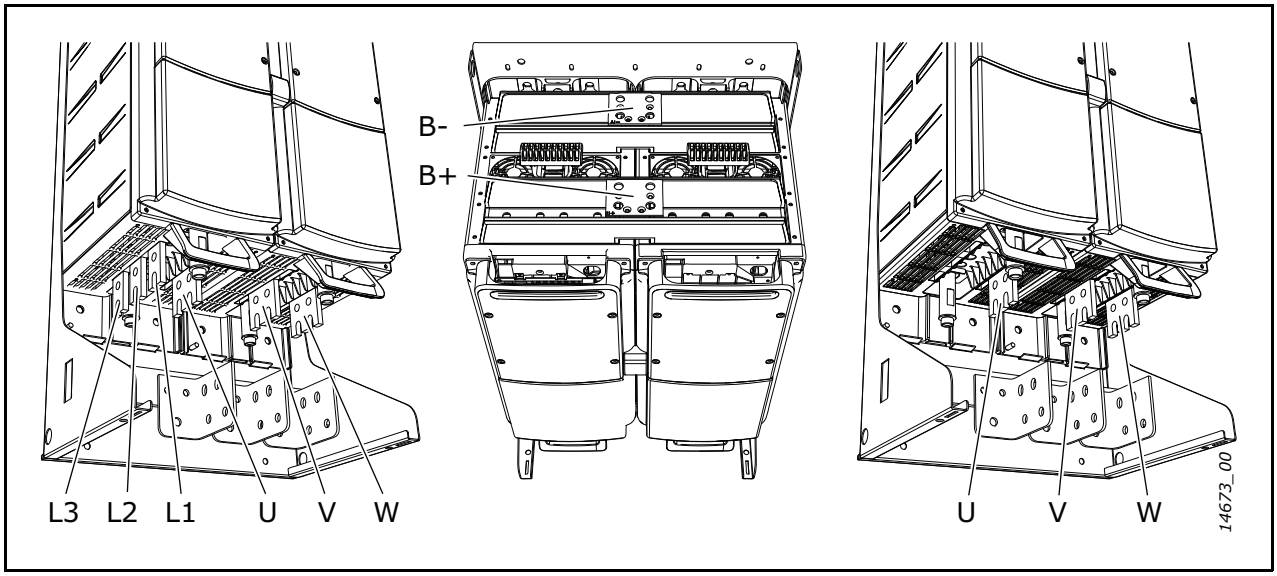

Figure 49. Main terminals in CH63 FC (left) and INU (right).
The DC terminals are the same in FC and INU.

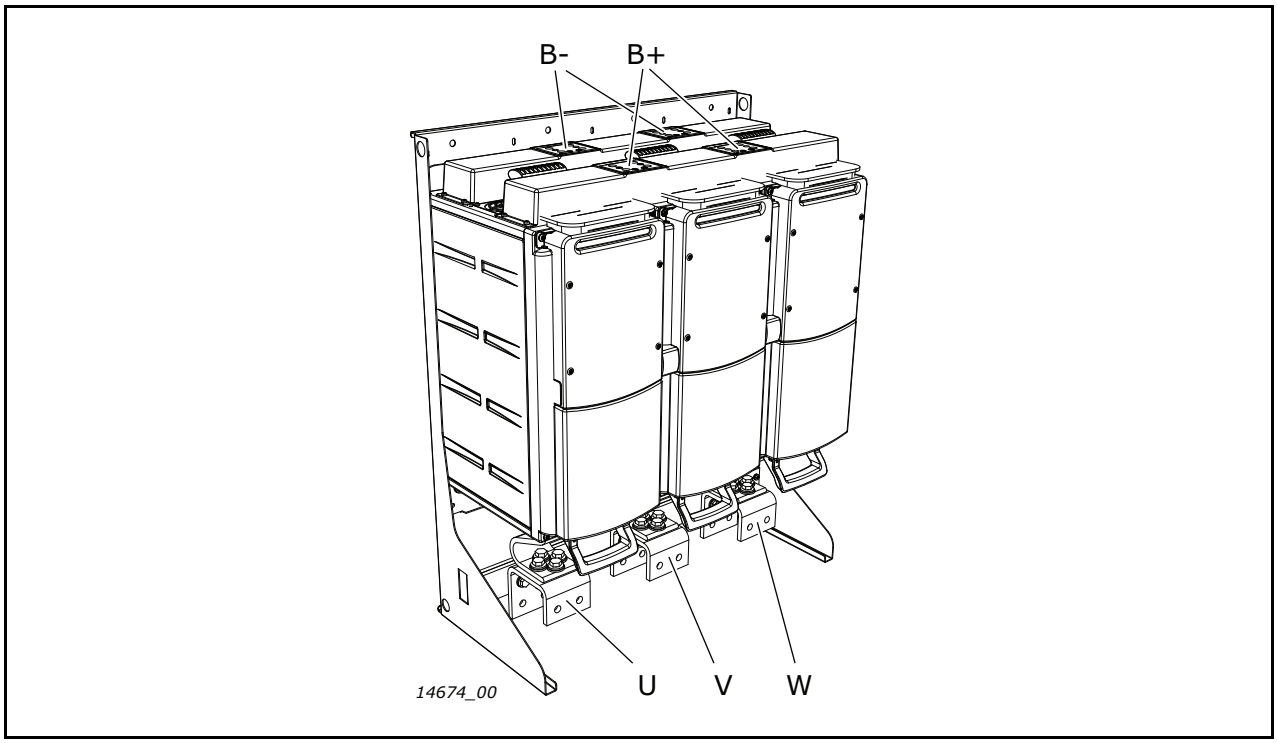

Figure 50. Main terminals in CH64

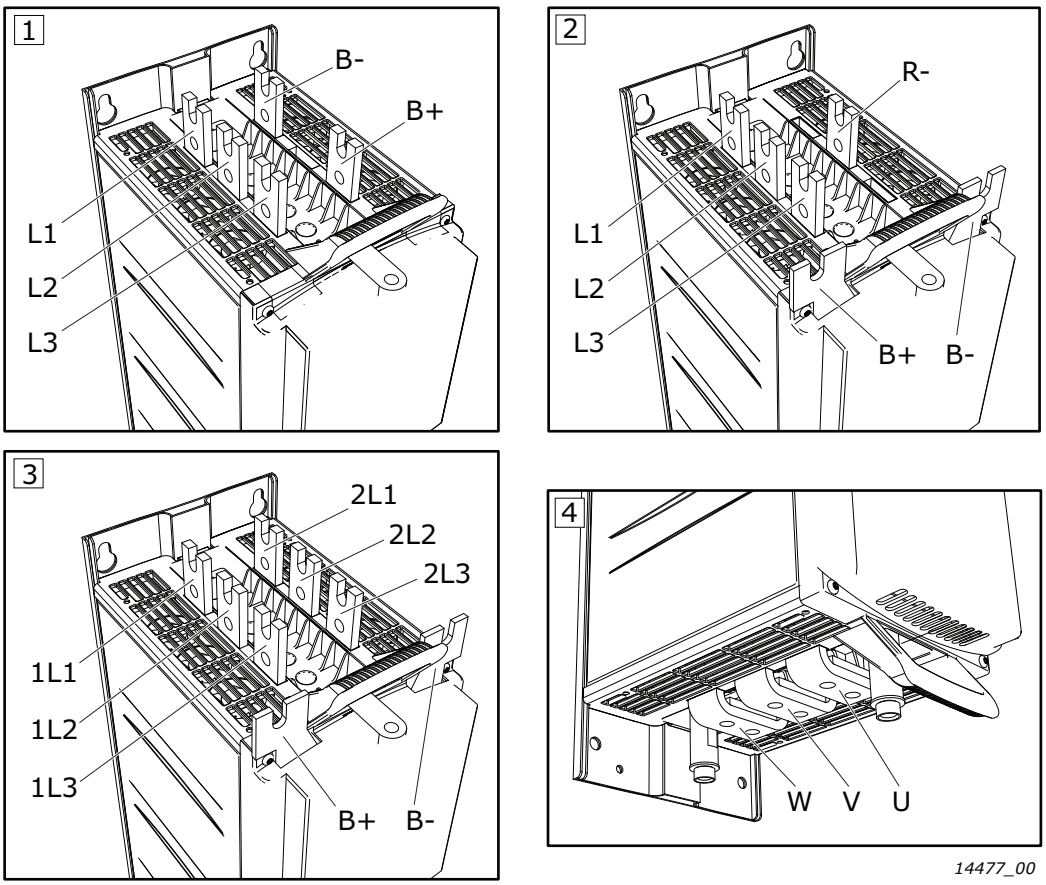

Figure 51. Main terminals in CH72:
1. Input terminals in 6-pulse units
2. Input terminals in units with brake option
3. Input terminals in 12-pulse units
4. Output terminals

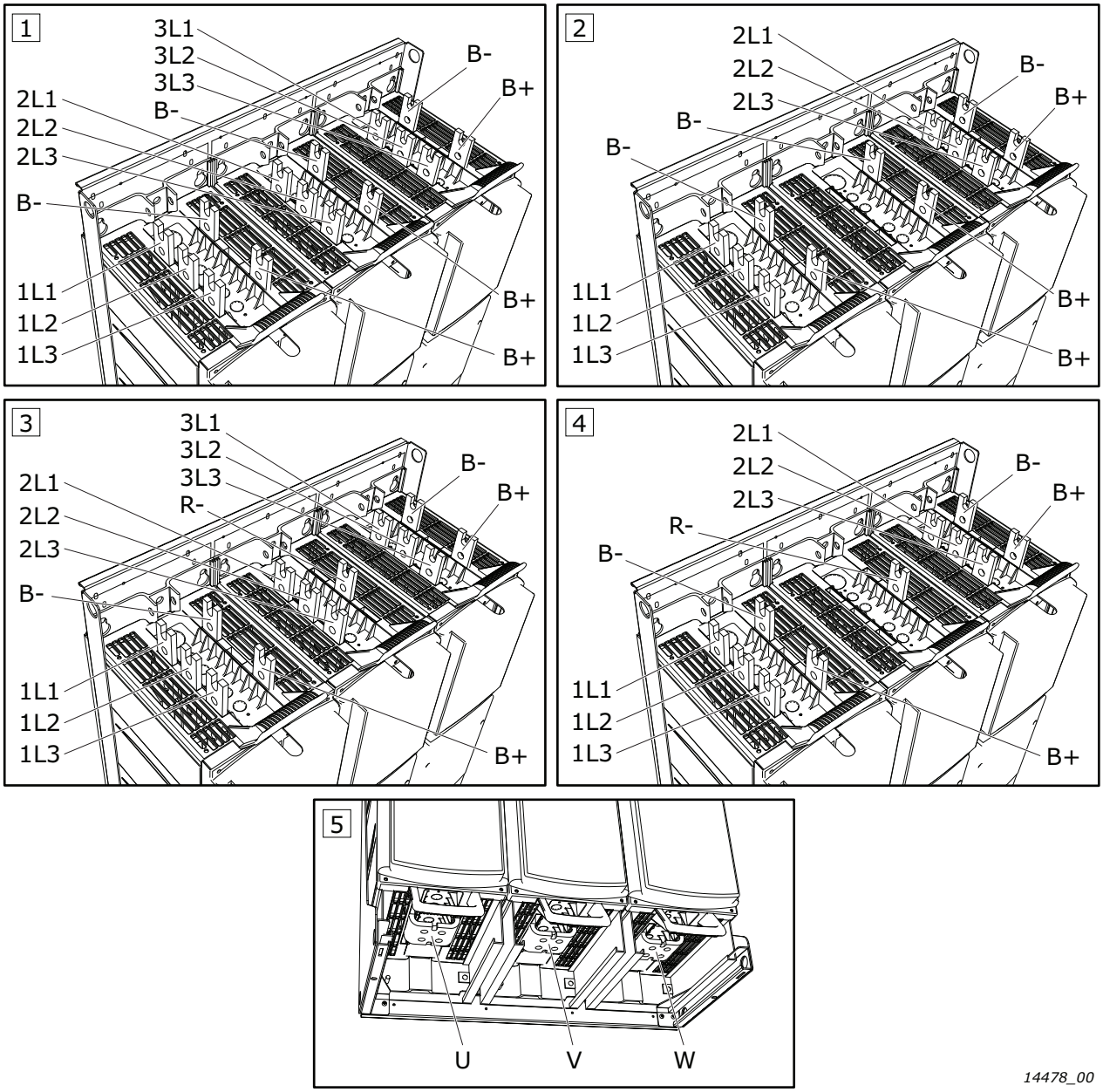

Figure 52. Main terminals in CH74:
1. Input terminals in 6-pulse units
2. Input terminals in 12-pulse units
3. Input terminals in 6-pulse units with brake option
4. Input terminals in 12-pulse units with brake option
5. Output terminals

6.1.2 POWER CONNECTIONS

Use cables with heat resistance of at least +90 °C. The cables and the fuses must be sized according to the drive nominal OUTPUT current that you can find on the rating plate. Sizing according to the output current is recommended because the drive input current never significantly exceeds the output current. Installation of cables according to UL regulations is presented in Chapter 6.1.7.

In chassis CH5 and greater, the field cables (both motor and mains) must be connected to a specific cable connection block (optional equipment). However, inside a switchgear, the cable connection can be made directly to the drive.

VACON® Liquid-cooled NX_8 inverter units must be equipped with a dU/dt or sine filter.

Table 41 shows the minimum sizes of the Cu-cables and the corresponding aR fuse sizes.

If the motor temperature protection of the drive (see VACON® NX All in One Application Manual) is used as an overload protection, the cable must be chosen accordingly. If three or more cables are used in parallel each cable requires a separate overload protection.

These instructions apply only to cases with one motor and one cable connection from the AC drive or inverter to the motor. In any other case, ask the factory for more information.

6.1.2.1 Mains cable

The mains cables of the size CH31 are connected to terminal blocks [see Figure 44] whereas busbar connection is used for greater sizes, see drawings in Chapter 6.1.1. Mains cable type for EMC level N in Table 35.

6.1.2.2 Motor cable

In order to avoid current sharing disbalance it is imperative to use symmetrical motor cables. We also recommends to always use shielded cable whenever possible.

The motor cables of the size CH31 are connected to terminal blocks (see Figure 44) whereas busbar connection is used for greater sizes, see the drawings in Chapter 6.1.1. Motor cable type for EMC level N in Table 35. Ask factory for more information on the use of ferrite cores with the motor cable in order to protect the motor bearings against motor bearing currents.

For information on control cables see Chapter 6.2.2.1 and Table 35.

Table 35. Cable types required to meet standards

Cable type	Level N/T
Mains cable	1
Motor cable	1
Control cable	4

1 = Power cable intended for fixed installation and the specific mains voltage. Symmetrical shielded cable recommended. (NKCABLES/MCMK or similar recommended)

4 = Screened cable equipped with compact low-impedance shield (NKCABLES /JAMAK, SAB/ÖZCuY-O or similar).

6.1.2.3 Motor cable data

Table 36. Motor cable sizes, 400—500 V

Chassis	Type	I_{th}	Motor cable Cu [mm²]	Terminal cable size		Max. number of cables/ Bolt size
				Main terminal [mm²], max.	Earth terminal [mm²]	
CH3	0016_5	16	3*2.5+2.5	50	1—10	(Terminal block)
CH3	0022_5	22	3*4+4	50	1—10	(Terminal block)
CH3	0031	31	3*6+6	50	1—10	(Terminal block)
CH3	0038_5 0045_5	38—45	3*10+10	50 Cu 50 Al	6—35	(Terminal block)
CH3	0061_5	61	3*16+16	50 Cu 50 Al	6—35	(Terminal block)
CH4	0072_5	72	3*25+16	50 Cu 50 Al	6—70	1/M8
CH4	0087_5	87	3*35+16	50 Cu 50 Al	6—70	1/M8
CH4	0105_5	105	3*50+25	50 Cu 50 Al	6—70	1/M8
CH4	0140_5	140	3*70+35	95 Cu/Al	25—95	1/M8
CH5	0168_5	168	3*95+50	185 Cu/Al	25—95	2/M10
CH5	0205_5	205	3*150+70	185 Cu/Al	25—95	2/M10
CH5	0261_5	261	3*185+95	185 Cu/Al	25—95	2/M10
CH61	0300_5	300	2*(3*120+70)	*	25—185	2/M12
CH61	0385_5	385	2*(3*120+70)	*	25—185	2/M12
CH62/72	0460_5	460	2*(3*150+70)	**	25—185	4/M12
CH62/72	0520_5	520	2*(3*185+95)	**	25—185	4/M12
CH62/72	0590_5 0650_5	590 650	3*(3*150+70)	**	25—185	4/M12
CH62/72	0730_5	730	3*(3*150+70)	**	25—185	4/M12
CH63	0820_5	820	3*(3*185+95)	**	****	8/M12
CH63	0920_5	920	4*(3*185+95	**	****	8/M12
CH63	1030_5	1030	4*(3*185+95)	**	****	8/M12
CH63	1150_5	1150	5*(3*185+95)	**	***	8/M12
CH64	1370_5	1370	5*(3*185+95)	**	***	8/M12
CH64	1640_5	1640	6*(3*185+95)	**	***	8/M12
CH64	2060_5	2060	7*(3*185+95)	**	***	8/M12
CH64	2300_5	2300	8*(3*185+95)	**	***	8/M12
CH74[1)]	1370_5	1370	5*(3*185+95)	**	***	4/M12
CH74[1)]	1640_5	1640	6*(3*185+95)	**	***	4/M12
CH74[1)]	2060_5	2060	7*(3*185+95)	**	***	4/M12
CH74[1)]	2300_5	2300	8*(3*185+95)	**	***	4/M12

[1)] Due to insufficient number of terminal bolt connections for required amount of cables, the cabinet must be

equipped with an external flexible cable connection block at both mains and motor ends if stiff cable type is used.

Units with 6-pulse supply

Note that all other sizes have 3 input terminals except for size CH74, which has 9 input terminals.

Units with 12-pulse supply

12-pulse supply can be used with drives of sizes CH72 and CH74. The number of input terminals for both is 6.

If 12-pulse supply is used, pay also attention to the fuse selection, see page 96 and page 97.

See the tightening torques of bolts in Table 40.

Table 37. Motor cable sizes, 525—690 V

Chassis	Type	I_{th}	Motor cable Cu [mm²]	Terminal cable size		Max. number of cables/ Bolt size
				Main terminal [mm²], max	Earth terminal [mm²]	
CH61	0170_6	170	3*95+50	185 Cu/Al	25—95	2/M12
CH61	0208_6	208	3*150+70	185 Cu/Al	25—95	2/M12
CH61	0261_6	261	3*185+95	185 Cu/Al 2	25—95	2/M12
CH62/72	0325_6	325	2*(3*95+50)	**	25—185	4/M12
CH62/72	0385_6	385	2*(3*120+70)	**	25—185	4/M12
CH62/72	0416_6	416	2*(3*150+70)	**	25—185	4/M12
CH62/72	0460_6	460	2*(3*185+95)	**	25—185	4/M12
CH62/72	0502_6	502	2*(3*185+95)	**	25—185	4/M12
CH63	0590_6	590	3*(3*150+70)	**	***	8/M12
CH63	0650_6	650	3*(3*150+70)	**	***	8/M12
CH63	0750_6	750	3*(3*185+95)	**	***	8/M12
CH74[1)]	0820_6	820	4*(3*150+70)	**	***	4/M12
CH74[1)]	0920_6	920	4*(3*185+95)	**	***	4/M12
CH74[1)]	1030_6	1030	4*(3*185+95)	**	***	4/M12
CH74[1)]	1180_6	1180	5*(3*185+95)	**	***	4/M12
CH74[1)]	1300_6	1300	5*(3*185+95)	**	***	4/M12
CH74[1)]	1500_6	1500	6*(3*185+95)	**	***	4/M12
CH74[1)]	1700_6	1700	6*(3*240+120)	**	***	4/M12

[1)] Due to insufficient number of terminal bolt connections for required amount of cables, the cabinet must be equipped with an external flexible cable connection block at both mains and motor ends if stiff cable type is used.

* = Number of bolt connections 2

** = Number of bolt connections 4

*** = Three grounding terminals per mounting plate, see Chapter 6.1.8.

**** = Two grounding terminals per mounting plate, see Chapter 6.1.8.

6.1.2.4 Mains cable data for AC drives

Table 38. Mains cable sizes for AC drives, 400—500 V

Chassis	Type	I_{th}	Mains cable Cu [mm²]	Terminal cable size		Max. number of cables/ Bolt size
				Main terminal [mm²], max	Earth terminal [mm²]	
CH3	0016_5	16	3*2.5+2.5	50	1—10	(Terminal block)
CH3	0022_5	22	3*4+4	50	1—10	(Terminal block)
CH3	0031	31	3*6+6	50	1—10	(Terminal block)
CH3	0038_5 0045_5	38—45	3*10+10	50 Cu 50 Al	6—35	(Terminal block)
CH3	0061_5	61	3*16+16	50 Cu 50 Al	6—35	(Terminal block)
CH4	0072_5	72	3*25+16	50 Cu 50 Al	6—70	1/M8
CH4	0087_5	87	3*35+16	50 Cu 50 Al	6—70	1/M8
CH4	0105_5	105	3*50+25	50 Cu 50 Al	6—70	1/M8
CH4	0140_5	140	3*70+35	95 Cu/Al	25—95	1/M8
CH5	0168_5	168	3*95+50	185 Cu/Al	25—95	2/M10
CH5	0205_5	205	3*150+70	185 Cu/Al	25—95	2/M10
CH5	0261_5	261	3*185+95	185 Cu/Al	25—95	2/M10
CH61	0300_5	300	2*(3*120+70)	300 Cu/Al	25—185	2/M12
CH61	0385_5	385	2*(3*120+70)	300 Cu/Al	25—185	2/M12
CH72/CH72	0460_5	460	2*(3*150+70)	300 Cu/Al	25—185	2 (or 4)/M12
CH72/CH72	0520_5	520	2*(3*185+95)	300 Cu/Al	25—185	2 (or 4)/M12
CH72	0590_5 0650_5	590 650	2*(3*240+120)	300 Cu/Al	25—185	2/M12
CH72	0590_5 0650_5 0730_5	590 650 730	4*(3*95+50)	300 Cu/Al	25—185	4/M12
CH72[1)]	0730_5	730	3*(3*150+70)	300 Cu/Al	25—185	2/M12
CH63[1)]	0820_5	820	3*(3*185+95)	300 Cu/Al	***	2/M12
CH63[1)]	0920_5 1030_5	920 1030	4*(3*185+95)	300 Cu/Al	***	2/M12
CH63[1)]	1150_5	1150	4*(3*240+120)	300 Cu/Al	***	2/M12
CH74/ CH74[1)]	1370_5	1370	6*(3*150+70)	300 Cu/Al	***	6 (or 4)/M12
CH74/ CH74[1)]	1640_5	1640	6*(3*185+95)	300 Cu/Al	***	6 (or 4)/M12
CH74[1)]	2060_5	2060	9*(3*150+70)	300 Cu/Al	***	6/M12

Table 38. Mains cable sizes for AC drives, 400—500 V

Chassis	Type	I_{th}	Mains cable Cu [mm²]	Terminal cable size		Max. number of cables/ Bolt size
				Main terminal [mm²], max	Earth terminal [mm²]	
CH74[1)]	2060_5	2060	8*(3*185+95)	300 Cu/Al	***	4/M12
CH74[1)]	2300_5	2300	9*(3*185+95)	300 Cu/Al	***	6/M12

[1)]Due to insufficient number of terminal bolt connections for required amount of cables, the cabinet must be equipped with an external flexible cable connection block at both mains and motor ends if stiff cable type is used.

Data in Italic refer to drives with 12-pulse supply.

Units with 6-pulse supply

Note that all other sizes have 3 input terminals except for size CH74, which has 9 input terminals. CH74 cables must be connected symmetrically between 3 parallel connected rectifiers in each phase.

Units with 12-pulse supply

12-pulse supply can be used with drives of sizes CH72 and CH74. The number of input terminals for both is 6.

If 12-pulse supply is used, pay also attention to the fuse selection, see page 96 and page 97.

See the tightening torques of bolts in Table 40.

Table 39. Mains cable sizes, 525—690 V

Chassis	Type	I_{th}	Mains cable Cu [mm²]	Terminal cable size		Max. number of cables/ Bolt size
				Main terminal [mm²], max.	Earth terminal [mm²]	
CH61	0170_6	170	3*95+50	185 Cu/Al	25—95	2/M12
CH61	0208_6	208	3*150+70	185 Cu/Al	25—95	2/M12
CH61	0261_6	261	3*185+95	185 Cu/Al 2	25—95	2/M12
CH72/CH72	0325_6	325	2*(3*95+50)	300 Cu/Al	25—185	2 (or 4)/M12
CH72/CH72	0385_6	385	2*(3*120+70)	300 Cu/Al	25—185	2 (or 4)/M12
CH72/CH72	0416_6	416	2*(3*150+70)	300 Cu/Al	25—185	2 (or 4)/M12
CH72/CH72	0460_6	460	2*(3*185+95)	300 Cu/Al	25—185	2 (or 4)/M12
CH72/CH72	0502_6	502	2*(3*185+95)	300 Cu/Al	25—185	2 (or 4)/M12
CH63	0590_6 0650_6	590 650	2*(3*240+120)	300 Cu/Al	****	2/M12
CH63[1)]	0750_6	750	3*(3*185+95)	300 Cu/Al	****	2/M12
CH74	0820_6	820	3*(3*185+95)	300 Cu/Al	***	6/M12
CH74	0820_6	820	4*(3*150+70)	300 Cu/Al	***	4/M12
CH74	0920_6	920	3*(3*240+120)	300 Cu/Al	***	6/M12
CH74	0920_6	920	4*(3*185+95)	300 Cu/Al	***	4/M12
CH74	1030_6	1030	6*(3*95+50)	300 Cu/Al	***	6/M12

Table 39. Mains cable sizes, 525—690 V

Chassis	Type	I_{th}	Mains cable Cu [mm²]	Terminal cable size		Max. number of cables/ Bolt size
				Main terminal [mm²], max.	Earth terminal [mm²]	
CH74	1030_6	1030	4*(3*185+95)	300 Cu/Al	***	4/M12
CH74	1180_6	1180	6*(3*120+95)	300 Cu/Al	***	6/M12
CH74	1180_6 1300_6	1180 1300	4*(3*240+120)	300 Cu/Al	***	4/M12
CH74	1300_6	1300	6*(3*150+95)	300 Cu/Al	***	6/M12
CH74	1500_6	1500	6*(3*185+95)	300 Cu/Al	***	6/M12
CH74[1)]	1500_6	1500	6*(3*185+95)	300 Cu/Al	***	4/M12
CH74	1700_6	1700	6*(3*240+120)	300 Cu/Al	***	6/M12
CH74[1)]	1700_6	1700	6*(3*240+120)	300 Cu/Al	***	4/M12

[1)]Due to insufficient number of terminal bolt connections for required amount of cables, the cabinet must be equipped with an external flexible cable connection block at both mains and motor ends if stiff cable type is used.

Data in Italic refer to drives with 12-pulse supply.

Units with 6-pulse supply

Note that all other sizes have 3 input terminals except for size CH74, which has 9 input terminals.

Units with 12-pulse supply

12-pulse supply can be used with drives of sizes CH72 and CH74. The number of input terminals for both is 6.

If 12-pulse supply is used, pay also attention to the fuse selection, see page 96 and page 97.

See the tightening torques of bolts in Table 40.

Table 40. Tightening torques of bolts

Bolt	Tightening torque [Nm]	Max. inward thread length [mm]
M8	20	10
M10	40	22
M12	70	22
Grounding bolt (see page 105)	13.5	-

We recommend a low-impedance grounding of the motor cable shield for better performance.

Because of several possible cable installations and environmental conditions, it is very important to consider local regulations and the IEC/EN standards.

6.1.2.5 Cable selection and unit installation in accordance with the UL standards

To meet the UL (Underwriters Laboratories) regulations, use a UL-approved copper cable with a minimum heat-resistance of +90 °C to meet the requirements.

Use Class 1 wire only.

The units are suitable for use on a circuit capable of delivering not more than 100,000 rms symmetrical amperes, 600 V maximum, when protected by J, L or T Class fuses.

Integral solid state short circuit protection does not provide branch circuit protection. Branch circuit protection must be provided in accordance with the National Electric Code and any additional local codes. Branch circuit protection provided by fuses only.

6.1.3 DRIVE PROTECTION – FUSES

In order to protect the drive from short-circuits and excessive loads, input line fuses must be used. The warranty becomes void if the drive is not equipped with appropriate fuses.

To ensure fuse performance, make sure that the available supply short circuit current is sufficient. See the minimum required short circuit current ($I_{cp,mr}$) in the fuse tables.

Depending on the drive configuration, the following types of fuse protection are recommended:

AC drive with AC supply:

Always protect the drive with fast-acting input line fuses for short-circuit protection. Also pay attention to protection of cables!

Common DC bus:

- Inverter units: Choose fuse protection according to Table 43 and Table 44.
- Active Front End (AFE) units: Choose DC fuses according to Table 43 and Table 44; Appropriate fuses for the AC supply are listed in Table 63 and Table 64, see Chapter 10.
- Inverter units connected to AFE units: Choose fuses for AC supply according to Table 63 and Table 64; **NOTE!** Protect each inverter unit with fuses according to Table 43 and Table 44.

DC links interconnected (e.g. 2*CH74)

In case interconnection of DC links is required, contact the manufacturer.

Brake chopper unit

See Chapter 11.

6.1.4 FUSE SIZES

The fuse sizing in the tables below is based on Ferraz aR fuses. We primarily recommend you to use these fuses or corresponding Bussman aR fuses (see Chapter 14.3). Sufficient protection against short-circuit cannot be guaranteed if other fuse types are used. Furthermore, equation of the fuse values given in the tables below with those of other fuse manufacturers is not allowed. In case you wish to use fuses of other fuse manufacturers, contact your nearest distributor.

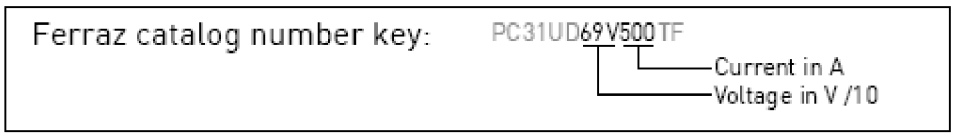

6.1.4.1 AC drives

Table 41. Fuse sizes for VACON® NX Liquid-cooled (500 V) AC drives

Chassis	Type	I_{th} [A]	Min. short circuit current $I_{cp,mr}$ [A]	Fuse size	DIN43620	DIN43653	TTF	Fuse U_n [V]	Fuse I_n [A]	Qty. of fuses per drive 3~/6~
					aR fuse catalog nr.	aR fuse catalog nr.	aR fuse catalog nr.			
CH3	0016	16	190	DIN000	NH000UD69V40PV	DN00UB69V40L	PC30UD69V50TF	690	40/50[1]	3
CH3	0022	22	190	DIN000	NH000UD69V40PV	DN00UB69V40L	PC30UD69V50TF	690	40/50[1]	3
CH3	0031	31	270	DIN000	NH000UD69V63PV	DN00UB69V63L	PC30UD69V63TF	690	63	3
CH3	0038	38	400	DIN000	NH000UD69V100PV	DN00UB69V100L	PC30UD69V100TF	690	63	3
CH3	0045	45	400	DIN000	NH000UD69V100PV	DN00UB69V100L	PC30UD69V100TF	690	100	3
CH3	0061	61	520	DIN00	NH00UD69V125PV	DN00UB69V125L	PC30UD69V125TF	690	100	3
CH4	0072	72	1000	DIN00	NH00UD69V200PV	DN00UB69V200L	PC30UD69V200TF	690	200	3
CH4	0087	87	1000	DIN00	NH00UD69V200PV	DN00UB69V200L	PC30UD69V200TF	690	200	3
CH4	0105	105	1000	DIN00	NH00UD69V200PV	DN00UB69V200L	PC30UD69V200TF	690	200	3
CH4	0140	140	2000	DIN1	NH1UD69V315PV	PC30UD69V315A	PC30UD69V315TF	690	200	3
CH5	0168	168	2000	DIN1	NH1UD69V315PV	PC30UD69V315A	PC30UD69V315TF	690	400	3
CH5	0205	205	2700	DIN1	NH1UD69V400PV	PC30UD69V400A	PC30UD69V400TF	690	400	3
CH5	0261	261	3400	DIN2	NH2UD69V500PV	PC31UD69V500A	PC31UD69V500TF	690	400	3
CH61	0300	300	5700	DIN2	NH2UD69V700PV	PC31UD69V700A	PC31UD69V700TF	690	700	3
CH61	0385	385	5700	DIN2	NH2UD69V700PV	PC31UD69V700A	PC31UD69V700TF	690	700	3
CH72	0460	460	7600	DIN3	NH3UD69V1000PV	PC33UD69V1000A	PC33UD69V1000TF	690	1000	3
CH72[2]	*0460*	*460*	*3400*	*DIN2*	*NH2UD69V500PV*	*PC31UD69V500A*	*PC31UD69V500TF*	*690*	*700*	*6*
CH72	0520	520	7600	DIN3	NH3UD69V1000PV	PC33UD69V1000A	PC33UD69V1000TF	690	1000	3
CH72[2]	*0520*	*520*	*3400*	*DIN2*	*NH2UD69V500PV*	*PC31UD69V500A*	*PC31UD69V500TF*	*690*	*700*	*6*
CH72	0590	590	9000	DIN3	PC73UB69V1100PA	PC33UD69V1100A	PC33UD69V1100TF	690	1000	3
CH72[2]	*0590*	*590*	*5700*	*DIN2*	*NH2UD69V700PV*	*PC31UD69V700A*	*PC31UD69V700TF*	*690*	*700*	*6*
CH72	0650	650	11000	DIN3	PC73UB69V1250PA	PC33UD69V1250A	PC33UD69V1250TF	690	1250	3
CH72[2]	*0650*	*650*	*5700*	*DIN2*	*NH2UD69V700PV*	*PC31UD69V700A*	*PC31UD69V700TF*	*690*	*700*	*6*
CH72	0730	730	11000	DIN3	PC73UB69V1250PA	PC33UD69V1250A	PC33UD69V1250TF	690	1250	3
CH72[2]	*0730*	*730*	*5700*	*DIN2*	*NH2UD69V700PV*	*PC31UD69V700A*	*PC31UD69V700TF*	*690*	*700*	*6*
CH63	0820	820	12200	DIN3	NH3UD69V800PV	PC32UD69V800A	PC32UD69V800TF	690	800	6
CH63	0920	920	15200	DIN3	NH3UD69V1000PV	PC33UD69V1000A	PC33UD69V1000TF	690	800	6
CH63	1030	1030	15200	DIN3	NH3UD69V1000PV	PC33UD69V1000A	PC33UD69V1000TF	690	1000	6
CH63	1150	1150	18000	DIN3	PC73UB69V1100PA	PC33UD69V1100A	PC33UD69V1100TF	690	1000	6
CH74	1370	1370	7600	DIN3	NH3UD69V1000PV	PC33UD69V1000A	PC33UD69V1000TF	690	1000	9
CH74[2]	*1370*	*1370*	*11000*	*DIN3*	*PC73UB69V1250PA*	*PC33UD69V1250A*	*PC73UB69V13CTF*	*690*	*800*	*6*
CH74	1640	1640	7600	DIN3	NH3UD69V1000PV	PC33UD69V1000A	PC33UD69V1000TF	690	1000	9
CH74[2]	*1640*	*1640*	*12200*	*DIN3*	*NH3UD69V800PV*	*PC32UD69V800A*	*PC32UD69V800TF*	*690*	*800*	*12*
CH74	2060	2060	11000	DIN3	PC73UB69V1250PA	PC33UD69V1250A	PC33UD69V1250TF	690	1250	9
CH74[2]	*2060*	*2060*	*15200*	*DIN3*	*NH3UD69V1000PV*	*PC33UD69V1000A*	*PC33UD69V1000TF*	*690*	*1000*	*12*
CH74	2300	2300	11000	DIN3	PC73UB69V1250PA	PC33UD69V1250A	PC33UD69V1250TF	690	1250	9
CH74[2]	*2300*	*2300*	*7600*	*DIN3*	*PC73UB69V1100PA*	*PC33UD69V1100A*	*PC33UD69V1100TF*	*690*	*1000*	*12*

[1] Fuse current (In) 50A for TTF aR fuse.

[2] Data in *Italic* refer to drives with 12-pulse supply

Table 42. Fuse sizes for VACON® NX Liquid-cooled (690 V) AC drives

Chassis	Type	I_{th} [A]	Min. short circuit current $I_{cp,mr}$ [A]	Fuse size	DIN43620	DIN43653	TTF	Fuse U_n [V]	Fuse I_n [A]	Qty. of fuses per drive 3~/6~
					aR fuse part nr.	aR fuse part nr.	aR fuse part nr.			
CH61	0170	170	2000	DIN1	NH1UD69V315PV	PC30UD69V315A	PC30UD69V315TF	690	315	3
CH61	0208	208	2700	DIN1	NH1UD69V400PV	PC30UD69V400A	PC30UD69V400TF	690	400	3
CH61	0261	261	3400	DIN2	NH2UD69V500PV	PC31UD69V500A	PC31UD69V500TF	690	500	3
CH72	0325	325	5700	DIN2	NH2UD69V700PV	PC31UD69V700A	PC31UD69V700TF	690	700	3
CH72[1]	*0325*	*325*	*2000*	*DIN1*	*NH1UD69V315PV*	*PC30UD69V315A*	*PC30UD69V315TF*	*690*	*315*	*6*
CH72	0385	385	5700	DIN2	NH2UD69V700PV	PC31UD69V700A	PC31UD69V700TF	690	700	3
CH72[1]	*0385*	*385*	*2700*	*DIN1*	*NH1UD69V400PV*	*PC30UD69V400A*	*PC30UD69V400TF*	*690*	*400*	*6*
CH72	0416	416	6100	DIN3	NH3UD69V800PV	PC32UD69V800A	PC32UD69V800TF	690	800	3
CH72[1]	*0416*	*416*	*2700*	*DIN1*	*NH1UD69V400PV*	*PC30UD69V400A*	*PC30UD69V400TF*	*690*	*400*	*6*
CH72	0460	460	7600	DIN3	NH3UD69V1000PV	PC33UD69V1000A	PC33UD69V1000TF	690	1000	3
CH72[1]	*0460*	*460*	*2700*	*DIN1*	*NH1UD69V400PV*	*PC30UD69V400A*	*PC30UD69V400TF*	*690*	*400*	*6*
CH72	0502	502	7600	DIN3	NH3UD69V1000PV	PC33UD69V1000A	PC33UD69V1000TF	690	1000	3
CH72[1]	*0502*	*502*	*3400*	*DIN2*	*NH2UD69V500PV*	*PC31UD69V500A*	*PC31UD69V500TF*	*690*	*500*	*6*
CH63	0590	590	9000	DIN3	PC73UB69V1100PA	PC33UD69V1100A	PC33UD69V1100TF	690	1100	3
CH63	0650	650	11000	DIN3	PC73UB69V1250PA	PC33UD69V1250A	PC33UD69V1250TF	690	1250	3
CH63	0750	750	11000	DIN3	PC73UB69V1250PA	PC33UD69V1250A	PC33UD69V1250TF	690	1250	3
CH74	0820	820	3400	DIN2	NH2UD69V500PV	PC31UD69V500A	PC31UD69V500TF	690	500	9
CH74[1]	*0820*	*820*	*6100*	*DIN3*	*NH3UD69V800PV*	*PC32UD69V800A*	*PC32UD69V800TF*	*690*	*800*	*6*
CH74	0920	920	5700	DIN2	NH2UD69V700PV	PC31UD69V700A	PC31UD69V700TF	690	700	9
CH74[1]	*0920*	*920*	*6100*	*DIN3*	*NH3UD69V800PV*	*PC32UD69V800A*	*PC32UD69V800TF*	*690*	*800*	*6*
CH74	1030	1030	5700	DIN2	NH2UD69V700PV	PC31UD69V700A	PC31UD69V700TF	690	700	9
CH74[1]	*1030*	*1030*	*7600*	*DIN3*	*NH3UD69V1000PV*	*PC33UD69V1000A*	*PC33UD69V1000TF*	*690*	*1000*	*6*
CH74	1180	1180	6100	DIN3	NH3UD69V800PV	PC32UD69V800A	PC32UD69V800TF	690	800	9
CH74[1]	*1180*	*1180*	*9000*	*DIN3*	*PC73UB69V1100PA*	*PC33UD69V1100A*	*PC33UD69V1100TF*	*690*	*1100*	*6*
CH74	1300	1300	6100	DIN3	NH3UD69V800PV	PC32UD69V800A	PC32UD69V800TF	690	800	9
CH74[1]	*1300*	*1300*	*11000*	*DIN3*	*PC73UB69V1250PA*	*PC33UD69V1250A*	*PC33UD69V1250TF*	*690*	*1250*	*6*
CH74	1500	1500	7600	DIN3	NH3UD69V1000PV	PC33UD69V1000A	PC33UD69V1000TF	690	1000	9
CH74[1]	*1500*	*1500*	*11000*	*DIN3*	*PC73UB69V1250PA*	*PC33UD69V1250A*	*PC33UD69V1250TF*	*690*	*1250*	*6*
CH74	1700	1700	7600	DIN3	NH3UD69V1000PV	PC33UD69V1000A	PC33UD69V1000TF	690	1000	9
CH74[1]	*1700*	*1700*	*12200*	*DIN3*	*NH3UD69V800PV*	*PC32UD69V800A*	*PC32UD69V800TF*	*690*	*800*	*12*

[1] Data in *Italic* refer to drives with 12-pulse supply

Fuse information

The values in tables are based on maximum ambient temperature of +50 °C.

Fuse sizes can differ in the same chassis. Make sure that the Isc of the supply transformer is high enough to burn fuses fast enough.

Check the current rating of the fuse bases according to the input current of the drive.

The physical size of the fuse is chosen on the basis of the fuse current: Current > 400 A (size 2 fuse or smaller), current < 400 A (size 3 fuse). The aR fuses are thermally rated into switch fuse in +50 °C ambient temperature.

6.1.4.2 Fuse sizes, inverters

Each DC supply line must be equipped with an aR fuse according to the tables below.

Table 43. Fuse sizes for VACON® NX Liquid-cooled (450—800 V) inverters

Chassis	Type	I_{th} [A]	DIN43620			"TTF" threaded end "7X" or size 83 with end contacts		"TTQF" threaded end size84 or "PLAF" 2x84 with end contacts		Fuse I_n [A]
			Fuse size	aR fuse part nr.	Fuses needed per drive	aR fuse part nr.	Fuses needed per drive	aR fuse part nr.	Fuses needed per drive	
CH3	0016	16	DIN0	PC70UD13C50PA	2	PC70UD13C50TF	2	-	-	50
CH3	0022	22	DIN0	PC70UD13C50PA	2	PC70UD13C50TF	2	-	-	50
CH3	0031	31	DIN0	PC70UD13C80PA	2	PC70UD13C63TF	2	-	-	80/63
CH3	0038	38	DIN0	PC70UD13C80PA	2	PC70UD13C80TF	2	-	-	125
CH3	0045	45	DIN0	PC70UD13C125PA	2	PC70UD13C125TF	2	-	-	125
CH3	0061	61	DIN0	PC70UD13C125PA	2	PC70UD13C125TF	2	-	-	125
CH4	0072	72	DIN0	PC70UD13C200PA	2	PC70UD13C200TF	2	-	-	200
CH4	0087	87	DIN0	PC70UD13C200PA	2	PC70UD13C200TF	2	-	-	200
CH4	0105	105	DIN0	PC70UD13C200PA	2	PC70UD13C200TF	2	-	-	200
CH4	0140	140	DIN1	PC71UD13C315PA	2	PC71UD13C315TF	2	-	-	315
CH5	0168	168	DIN1	PC71UD13C315PA	2	PC71UD13C315TF	2	-	-	315
CH5	0205	205	DIN1	PC71UD13C400PA	2	PC71UD13C400TF	2	-	-	400
CH5	0261	261	DIN3	PC73UD13C500PA	2	PC73UD13C500TF	2	-	-	500
CH61	0300	300	DIN3	PC73UD13C630PA	2	PC73UD13C630TF	2	-	-	630
CH61	0385	385	DIN3	PC73UD11C800PA	2	PC73UD13C800TF	2	-	-	800
CH62	0460	460	DIN3	PC73UD90V11CPA	2	PC73UD95V11CTF	2	-	-	1100
CH62	0520	520	DIN3	PC73UD90V11CPA	2	PC73UD95V11CTF	2	-	-	1100
CH62	0590	590	DIN3	PC73UD13C630PA	4	PC73UD95V11CTF	2	-	-	630/ 1100
CH62	0650	650	DIN3	PC73UD13C630PA	4	PC83UD11C13CTF	2	-	-	630/ 1300
CH62	0730	730	DIN3	PC73UD11C800PA	4	PC83UD11C13CTF	2	-	-	800/ 1300
CH63	0820	820	DIN3	PC73UD11C800PA	4	PC73UD13C800TF	4	PC84UD13C15CTQ	2	800/ 1500
CH63	0920	920	DIN3	PC73UD90V11CPA	4	PC73UD95V11CTF	4	PC84UD12C18CTQ	2	1100/ 1800
CH63	1030	1030	DIN3	PC73UD90V11CPA	4	PC73UD13C800TF	4	PC84UD11C20CTQ	2	1100/ 800/ 2000
CH63	1150	1150	-	-	-	PC83UD11C13CTF	4	PC84UD11C22CTQ	2	1300/ 2200
CH64	1370	1370	-	-	-	PC83UD11C14CTF	4	PC84UD10C27CTQ	2	1400/ 2700
CH64	1640	1640	-	-	-	PC73UD13C800TF	8	PC87UD12C30CP50	2	800/ 3000

Table 43. Fuse sizes for VACON® NX Liquid-cooled (450—800 V) inverters

Chassis	Type	I_{th} [A]	DIN43620			"TTF" threaded end "7X" or size 83 with end contacts		"TTQF" threaded end size84 or "PLAF" 2x84 with end contacts		Fuse I_n [A]
			Fuse size	aR fuse part nr.	Fuses needed per drive	aR fuse part nr.	Fuses needed per drive	aR fuse part nr.	Fuses needed per drive	
CH64	2060	2060	-	-	-	PC73UD95V11CTF	8	PC87UD11C38CP50	2	1100/3800
CH64	2300	2300	-	-	-	PC73UD95V11CTF	8	PC87UD10C44CP50	2	1100/4400

Table 44. Fuse sizes for VACON® NX Liquid-cooled (640—1100 V) inverters

Chassis	Type	I_{th} [A]	DIN43620			"TTF" threaded end "7X" or size 83 with end contacts		"TTQF" threaded end size84 or "PLAF" 2x84 with end contacts		Fuse I_n [A]
			Fuse size	aR fuse part nr.	Fuses needed per drive	aR fuse part nr.	Fuses needed per drive	aR fuse part nr.	Fuses needed per drive	
CH61	0170	170	DIN1	PC71UD13C400PA	2	PC71UD13C400TF	2	-	-	400
CH61	0208	208	DIN1	PC71UD13C400PA	2	PC71UD13C400TF	2	-	-	400
CH61	0261	261	DIN1	PC73UD13C500PA	2	PC73UD13C500TF	2	-	-	500
CH62	0325	325	DIN3	PC73UD13C630PA	2	PC73UD13C630TF	2	-	-	630
CH62	0385	385	DIN3	PC73UD11C800PA	2	PC73UD13C800TF	2	-	-	800
CH62	0416	416	DIN3	PC73UD11C800PA	2	PC73UD13C800TF	2	-	-	800
CH62	0460	460	DIN3	PC73UD10C900PA	2	PC73UD12C900TF	2	-	-	900
CH62	0502	502	DIN3	PC73UD10C900PA	2	PC73UD12C900TF	2	-	-	900
CH63	0590	590	DIN3	PC73UD13C630PA	4	PC83UD12C11CTF	2	-	-	630/1100
CH63	0650	650	DIN3	PC73UD13C630PA	4	PC83UD11C13CTF	2	-	-	630/1300
CH63	0750	750	DIN3	PC73UD11C800PA	4	PC83UD11C14CTF	2	-	-	800/1400
CH64	0820	820	DIN3	PC73UD11C800PA	4	PC73UD13C800TF	4	PC84UD13C15CTQ	2	800/1500
CH64	0920	920	DIN3	PC73UD10C900PA	4	PC73UD12C900TF	4	PC84UD12C18CTQ	2	900/1800
CH64	1030	1030	-	-	-	PC83UD12C11CTF	4	PC84UD11C20CTQ	2	1100/2000
CH64	1180	1180	-	-	-	PC83UD12C11CTF	4	PC84UD11C22CTQ	2	1100/2200
CH64	1300	1300	-	-	-	PC83UD11C13CTF	4	PC84UD11C24CTQ	2	1300/2400

Table 44. Fuse sizes for VACON® NX Liquid-cooled (640—1100 V) inverters

Chassis	Type	I_{th} [A]	DIN43620			"TTF" threaded end "7X" or size 83 with end contacts		"TTQF" threaded end size84 or "PLAF" 2x84 with end contacts		Fuse I_n [A]
			Fuse size	aR fuse part nr.	Fuses needed per drive	aR fuse part nr.	Fuses needed per drive	aR fuse part nr.	Fuses needed per drive	
CH64	1500	1500	-	-	-	PC83UD11C14CTF	4	PC87UD12C30CP50	2	1400/3000
CH64	1700	1700	-	-	-	PC73UD12C900TF	8	PC87UD12C34CP50	2	900/3400
CH64	1900	1900	-	-	-	PC73UD12C900TF	8	PC87UD12C34CP50	2	900/3400

Fuse information

The values in tables are based on maximum ambient temperature of +50 ºC.

Fuse sizes can differ in the same chassis. Fuses can be chosen according to the biggest current rating of the chassis to minimize fuse variants. Make sure that the I_{sc} of the supply transformer is high enough to burn fuses fast enough.

Check the current rating of the fuse bases according to the input current of the drive.

The physical size of the fuse is chosen on the basis of the fuse current: Current < 250 A (size 1 fuse), current > 250 A (size 3 fuse).

The aR fuses are thermally rated into switch fuse in +50 ºC ambient temperature.

6.1.5 CABLE INSTALLATION INSTRUCTIONS

1	Before starting the installation, check that none of the components of the AC drive is live.
2	VACON® NX Liquid-cooled drive must always be installed in an enclosure, a separate cubicle or an electrical room. Always use a jib crane or similar lifting device to lift the drive. For safe and appropriate lifting, see Chapter 5.1.1.

3

Place the motor cables far enough from other cables:

- Avoid placing the motor cables in long parallel lines with other cables
- If the motor cables run in parallel with other cables, note the minimum distances between the motor cables and other cables given in table below.
- The given distances also apply between the motor cables and signal cables of other systems.

Distance between cables running in parallel [m]	Shielded cable [m]
0.3	≤ 50
1.0	≤ 200

- The maximum length of the motor cables is 300 m.
- The motor cables should cross other cables at an angle of 90°.

4

If cable insulation checks are needed, see Chapter 6.1.11.

5

Connect the cables/busbars:

- For chassis CH5 and greater, an external flexible cable connection block must be used at both mains and motor ends if stiff cable type (EMCMK, MCMK) is used. See Chapter 6.1.2.
- Strip the cables at a sufficient distance if needed.
- Connect the mains, motor and control cables to their respective terminals (see Chapter 5.1.2). If busbar connection is used, bolt the bars and the terminals together. See bolt sizes in Table 11.
- Take the maximum terminal stresses shown in Figure 54 into account.
- For information on cable installation according to UL regulations see Chapter 6.1.10.
- Make sure that the control cable wires do not come in contact with the electronic components of the unit.
- If an external brake resistor (option) is used, connect its cable to the appropriate terminal.
- Check the connection of the earth cable to the motor and the AC drive terminals marked with ⏚.
- Connect the separate shield of the power cable to the earth terminals of the AC drive, motor and the supply centre.

6

Clamp the motor cables to the cabinet frame as instructed in Figure 53.

7

Liquid cooling connection:

The standard delivery of the VACON® NX Liquid-cooled drive includes hoses on the cooling element 1.5 m in length and 15 mm in diameter. The hoses are inserted in 1400 mm UL94V0 approved conduits. Connect the line hose branch to its counterpart (screw or fast connector) on the VACON® Liquid-cooled drive. Due to high pressure in the line hose, it is recommended to equip the liquid line with a shut-off valve, which makes the connection easier. In order to prevent water from spraying in the installation room we also recommend to wrap e.g. linters around the connection on installing. For more information on the liquid connection, see Chapter 5.2.5.
When the installation in the enclosure is completed the liquid pump can be started. See Commissioning of the AC drive on page 157.

NOTE! Do not switch on the power before ensuring the proper functioning of the liquid cooling system.

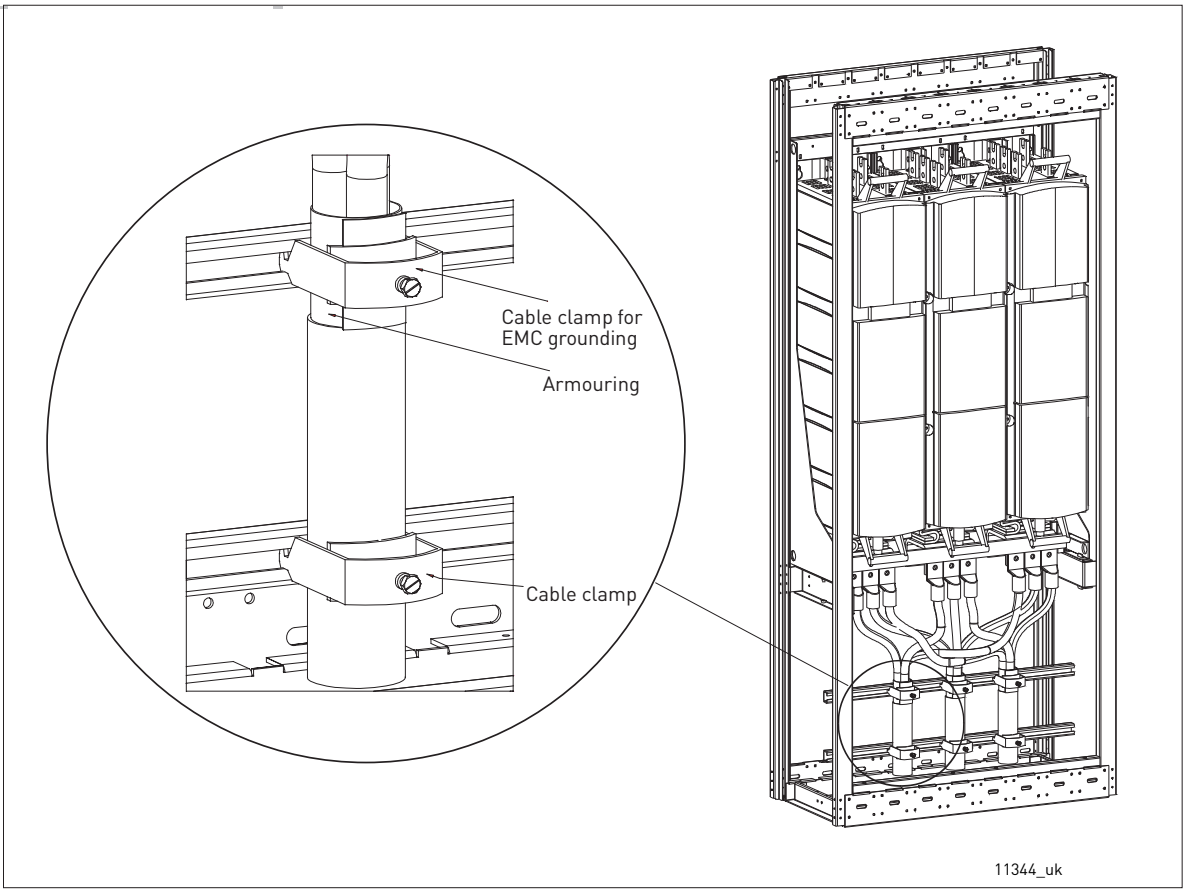

Figure 53. Clamping the motor cables to cabinet frame

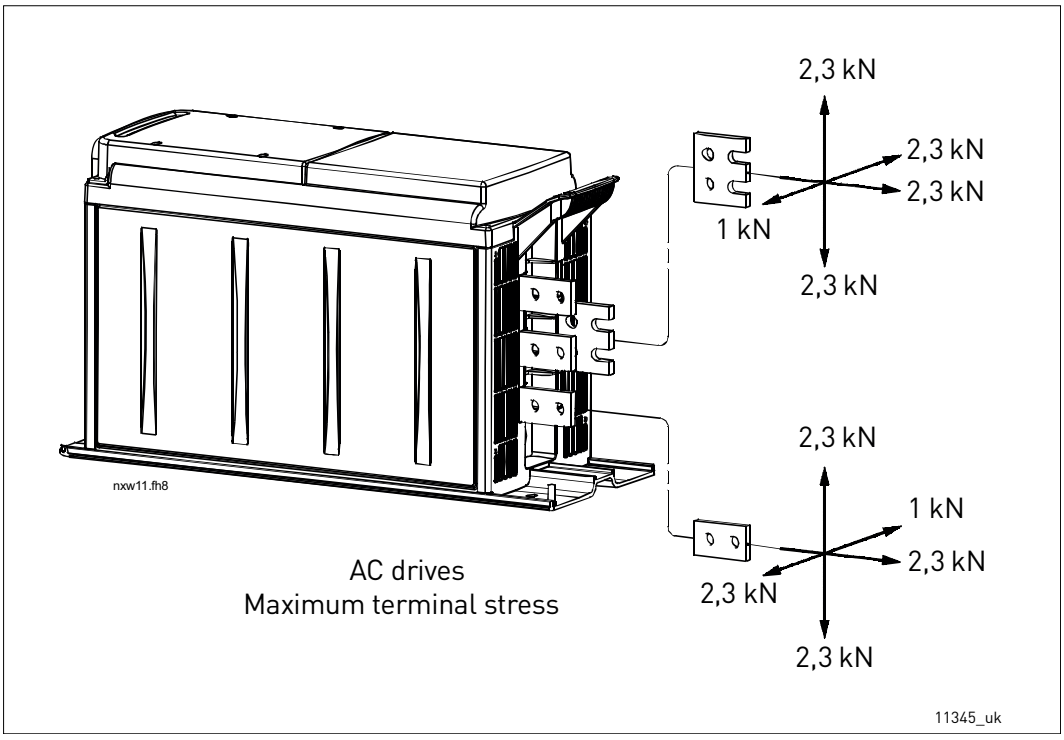

Figure 54. Maximum terminal stresses

6.1.6 SUPPLY BUSBARS FOR INVERTER UNITS

In order to avoid excessive terminal stresses on busbar terminals on inverter units with DC-supply on top (CH61–CH64), use flexible busbar connection. See figure below. The maximum terminal stresses are shown in Figure 54.

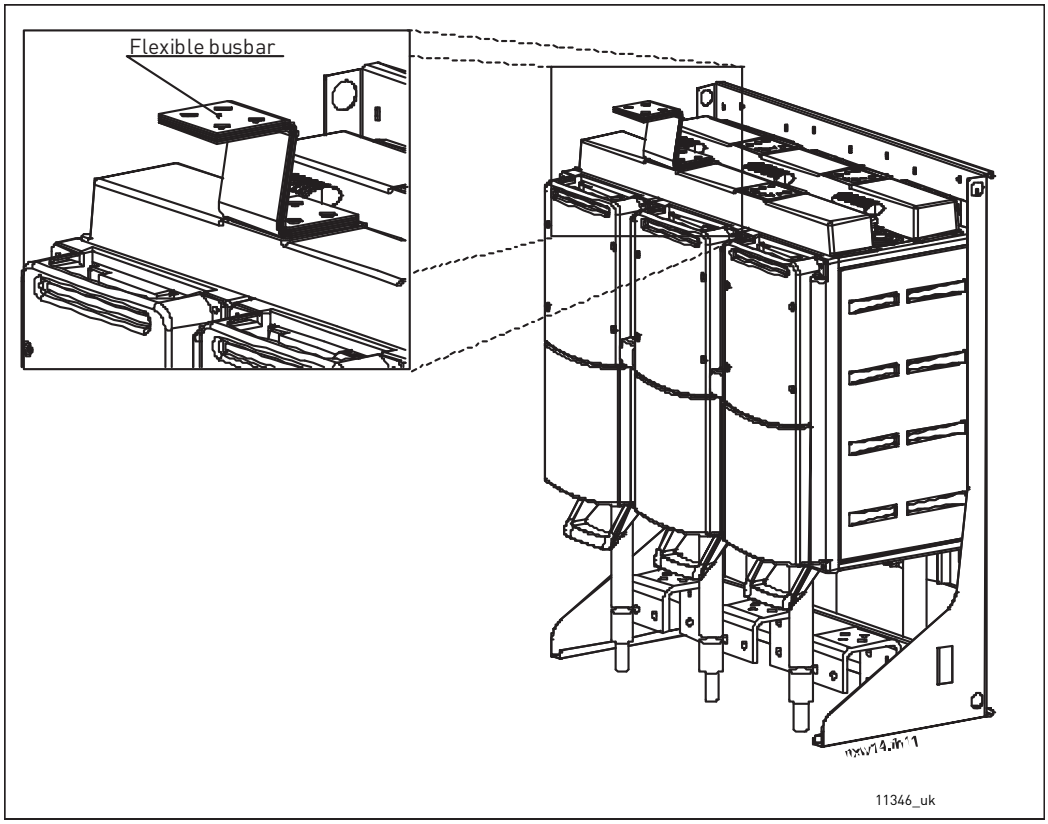

Figure 55. Mounting of flexible busbar

6.1.7 INSTALLATION SPACE

Enough free space must be left above and below the AC drive/inverter to ensure practical and appropriate electrical and cooling connections. The minimum dimensions are given in the table below. The space left and right to the drive may be 0 mm.

Table 45. Installation space

Chassis	A [mm]	B [mm]
CH3	100	150
CH4	100	200
CH5	100	200
CH61	100	300
CH62	100	400*
CH63	200	400*
CH64	200	500*
CH72	200	400*
CH74	200	500*

*Distance to the cable connection block. Additional space must be reserved for possibly used ferrite rings. See Chapter 6.1.2.2.

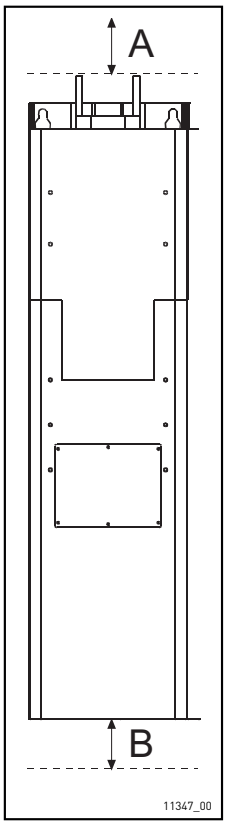

6.1.8 GROUNDING OF POWER UNIT

The mains cables are connected to the protective earth of the switchgear enclosure.

We recommend to connect the motor cables to the common PE of the cabinet/cabinet system.

For grounding of the drive itself, use the grounding terminal on the drive mounting plate (see Figure 56) and tighten the grounding bolt to 13.5 Nm.

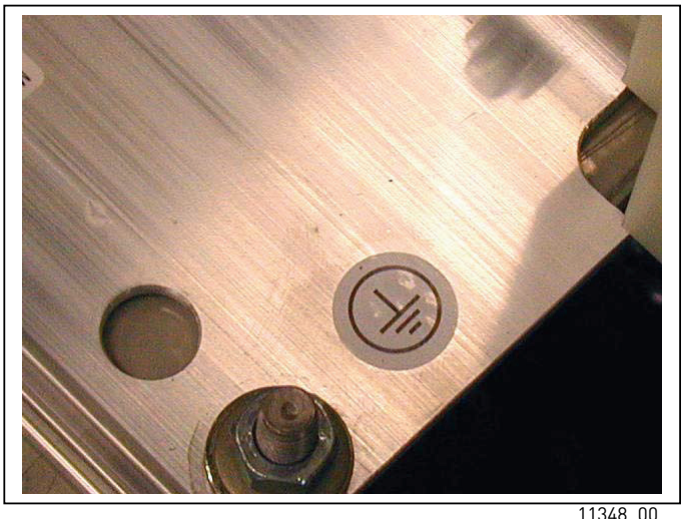

Figure 56. Grounding terminal on mounting plate

6.1.9 INSTALLATION OF FERRITE RINGS (OPTION) ON THE MOTOR CABLE

Slip only the phase conductors through the window; leave the cable screen below and outside the rings, see Figure 57. Separate the PE conductor. In case of parallel motor cables, reserve an equal amount of ferrite rings for each cable and feed all the phase conductors of one cable through one set of rings. The delivery includes fixed sets of ferrite rings.

When ferrite rings are used to attenuate the risk of bearing damages, the number of ferrites has to be 6–10 for a single motor cable and 10 per cable when the motor is supplied with parallel cables.

NOTE! The ferrite rings are only additional protection. The basic protection against bearing currents is an insulated bearing.

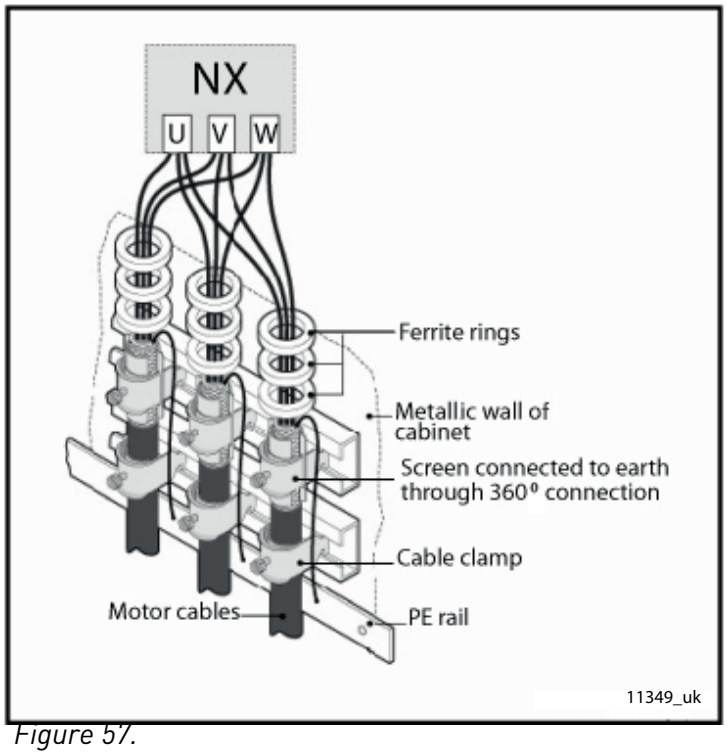

Figure 57. Installation of ferrite rings

6.1.10 CABLE INSTALLATION AND THE UL STANDARDS

To meet the UL (Underwriters Laboratories) regulations, a UL-approved copper cable with a minimum heat-resistance of 90 °C must be used.

Use Class 1 wire only.

The units are suitable for use on a circuit capable of delivering not more than 100,000 rms symmetrical amperes, 600 V maximum.

The tightening torques of the terminals are given in Table 40.

6.1.11 CABLE AND MOTOR INSULATION CHECKS

Motor cable insulation checks

1. Disconnect the motor cable from terminals U, V and W of the AC drive and from the motor. Measure the insulation resistance of the motor cable between each phase conductor as well as between each phase conductor and the protective ground conductor.

Mains cable insulation checks

2. Disconnect the mains cable from terminals L1, L2 and L3 of the AC drive and from the mains. Measure the insulation resistance of the mains cable between each phase conductor as well as between each phase conductor and the protective ground conductor.

   The insulation resistance must be at least 1...2 MΩ.

Motor insulation checks

3. Disconnect the motor cable from the motor and open the bridging connections in the motor connection box. Measure the insulation resistance of each motor winding. The measurement voltage must equal at least the motor nominal voltage but not exceed 1000 V. The insulation resistance must be at least 1...2 MΩ.

6.2 CONTROL UNIT

The control unit of VACON® NX Liquid-cooled AC drive/inverter is installed into a mounting box. It contains the control board and additional boards (see Figure 58 and Figure 59) connected to the five slot connectors (A to E) of the control board. The control unit and the ASIC of the power unit are connected through cables (and an adapter board). For more information, see page 121.

The mounting box with the control unit is mounted inside an enclosure. See the mounting instructions on page 117.

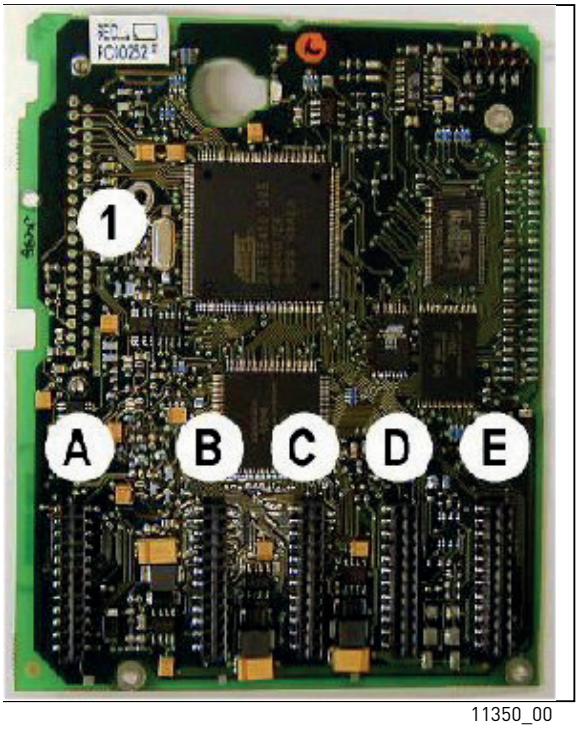

Figure 58. VACON® NX control board

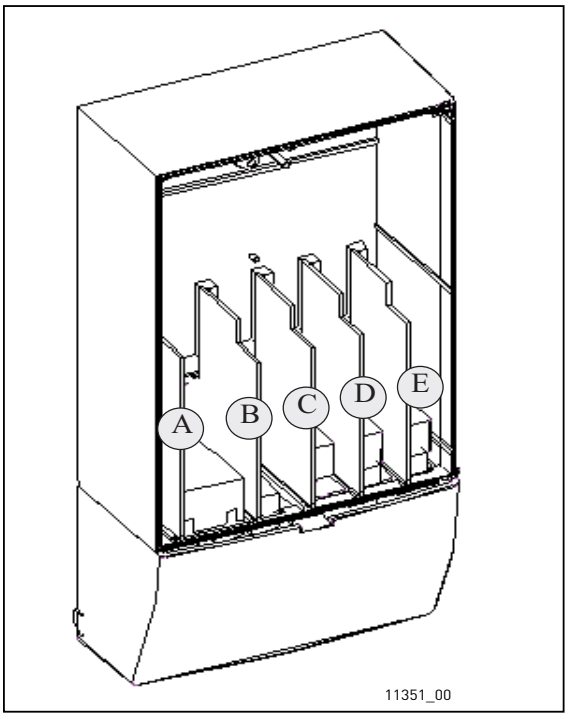

Figure 59. Basic and option board connections on the control board

Usually, when the AC drive is delivered from the factory, the control unit includes at least the standard compilation of two basic boards (I/O board and relay board) which are normally installed in slots A and B. On the next pages you will find the arrangement of the control I/O and the relay terminals of the two basic boards, the general wiring diagram and the control signal descriptions. The I/O boards mounted at the factory are indicated in the type code.

The control board can be powered externally (+24 V DC, ±10%) by connecting the external power source to the control unit. This voltage is sufficient for parameter setting and for keeping the fieldbus active.

NOTE! The control board of NX_8 (voltage class 8) AFE, INU or BCU units must always be powered externally with a +24 V DC ±10% power source.

The preferred solution is to connect the external +24 VDC power supply to the fiber adapter board terminals X3:1 (24 V DC) & X3:2 (GND) or star coupler board terminals X4:25 (24 V DC) & X4:26 (GND), see pictures below.

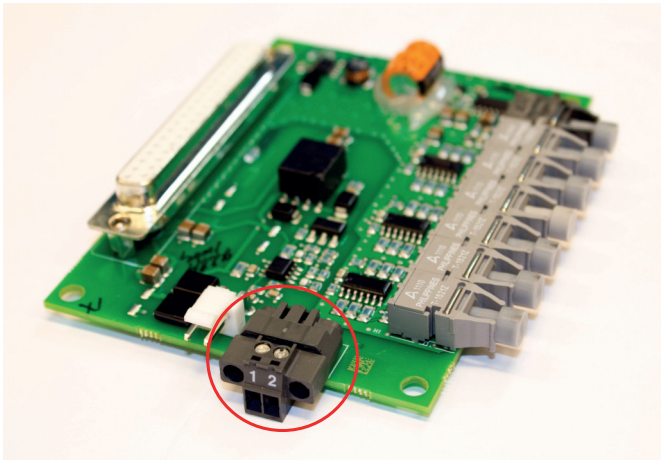

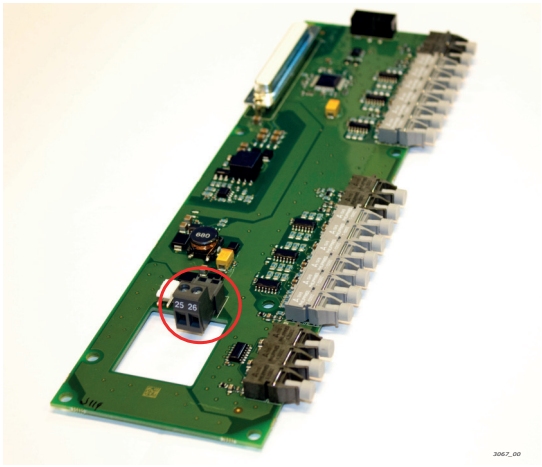

The control board can also be powered externally (+24 V, ±10%) by connecting the external power source to either of the bidirectional terminal #6 or #12, see page 113. With this voltage, the control unit stays on and parameters can be set. The measurements of the main circuit (for example, the DC-link voltage, and the unit temperature) are not available when the drive is not connected to mains.

NOTE! If the AC drive is supplied with external 24 V DC power, use a diode in terminal #6 (or #12) to prevent the current to flow in opposite direction. Put a 1 A fuse in 24 V DC line for each AC drive. The maximum current consumption of each drive is 1 A from the external supply.

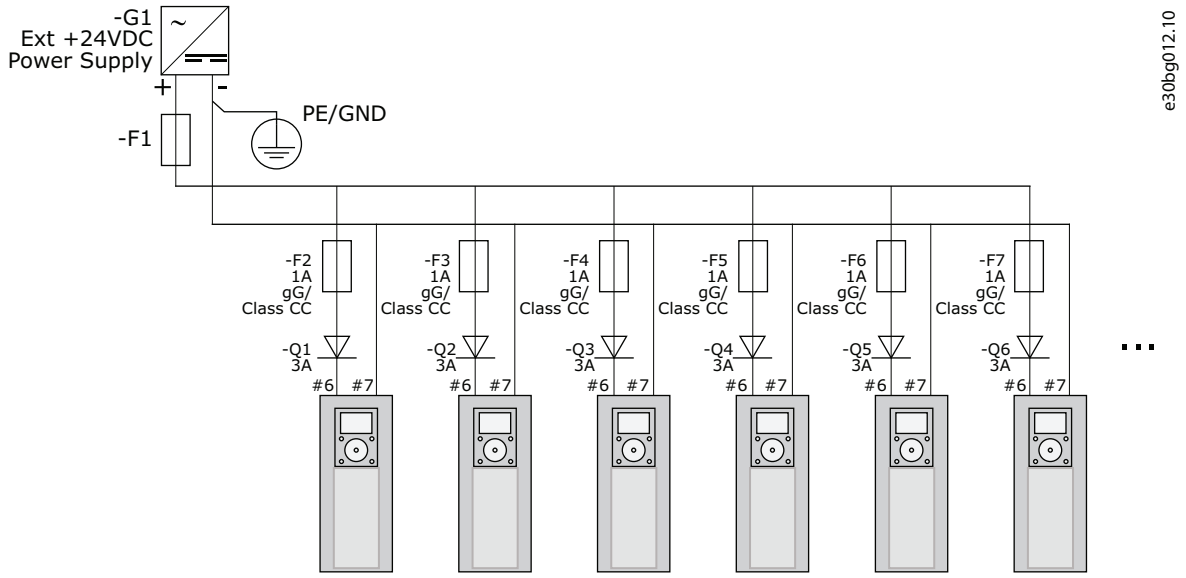

Figure 60. Parallel connection of 24 V inputs with many AC drives

NOTE! The control unit I/O ground is not isolated from the chassis ground/protective earth. In the installation, consider the potential differences between the grounding points. We recommend using galvanic isolation in the I/O and 24 V circuitry.

6.2.1 CONTROL BOARD POWER-UP

The control board can be powered (+24 V) in two different ways: either 1) directly from the power board ASIC, terminal X10 or/and 2) externally using the customer's own power source. The two ways of supplying the board can be used simultaneously. This voltage is sufficient for parameter setting and for keeping the fieldbus active.

By factory default, the control unit is powered using the terminal X10 on the power board. However, if an external supply is used to power up the control unit, a load resistor must be connected to terminal X10 on the power board. This applies to all chassis ≥ CH61.

6.2.2 CONTROL CONNECTIONS

The basic control connections for boards A1 and A2 are shown in Chapter 6.2.3.

The signal descriptions are presented in VACON® NX All in One Application Manual.

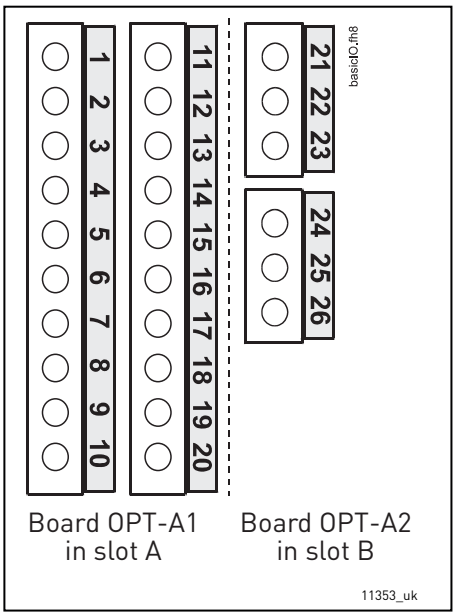

Figure 61. The I/O terminals of the two basic boards

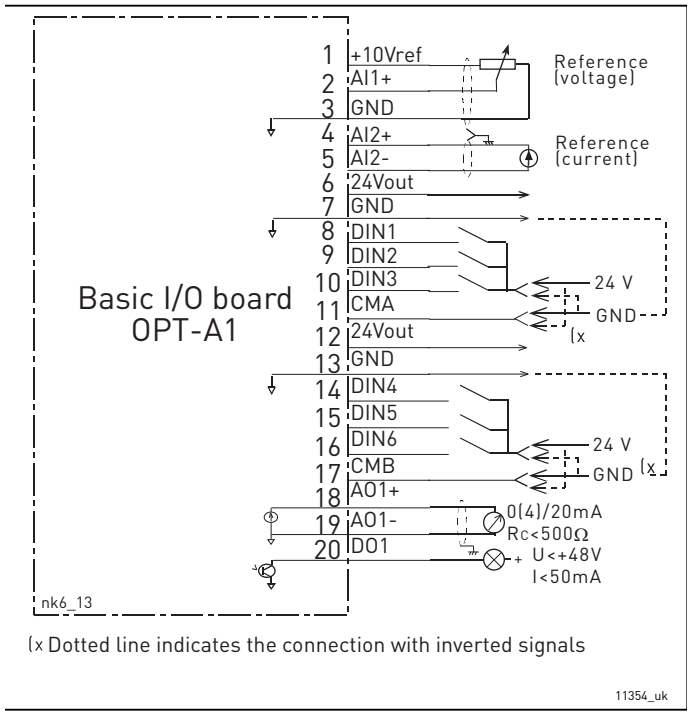

Figure 62. General wiring diagram of the basic I/O board (OPT-A1)

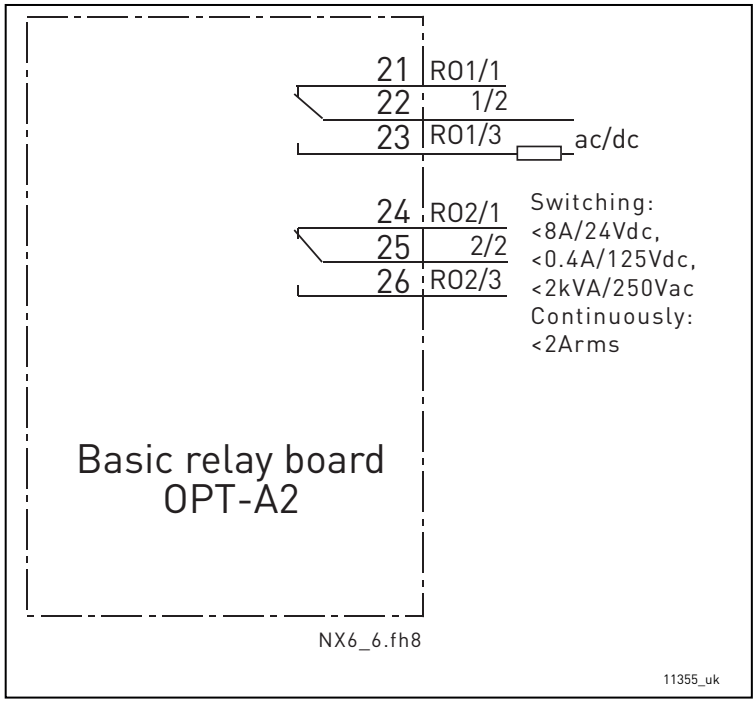

Figure 63. General wiring diagram of the basic relay board (OPT-A2)

6.2.2.1 Control cables

The control cables must be a minimum of 0.5 mm^2 (20 AWG) screened multi-core cables. The terminal wires must be a maximum of 2.5 mm^2 (14 AWG) for the terminals of the relay board and 1.5 mm^2 (16 AWG) for other terminals.

Table 46. The tightening torques of the control cables

The terminal	The terminal screw	The tightening torque	
		Nm	lb-in
Relay and thermistor terminals	M3	0.5	4.5
Other terminals	M2.6	0.2	1.8

6.2.2.2 Galvanic isolation barriers

The control connections are isolated from the mains potential and the GND terminals are permanently connected to ground. See Figure 64.
The digital inputs are galvanically isolated from the I/O ground. The relay outputs are additionally double-isolated from each other at 300 V AC (EN-50178).

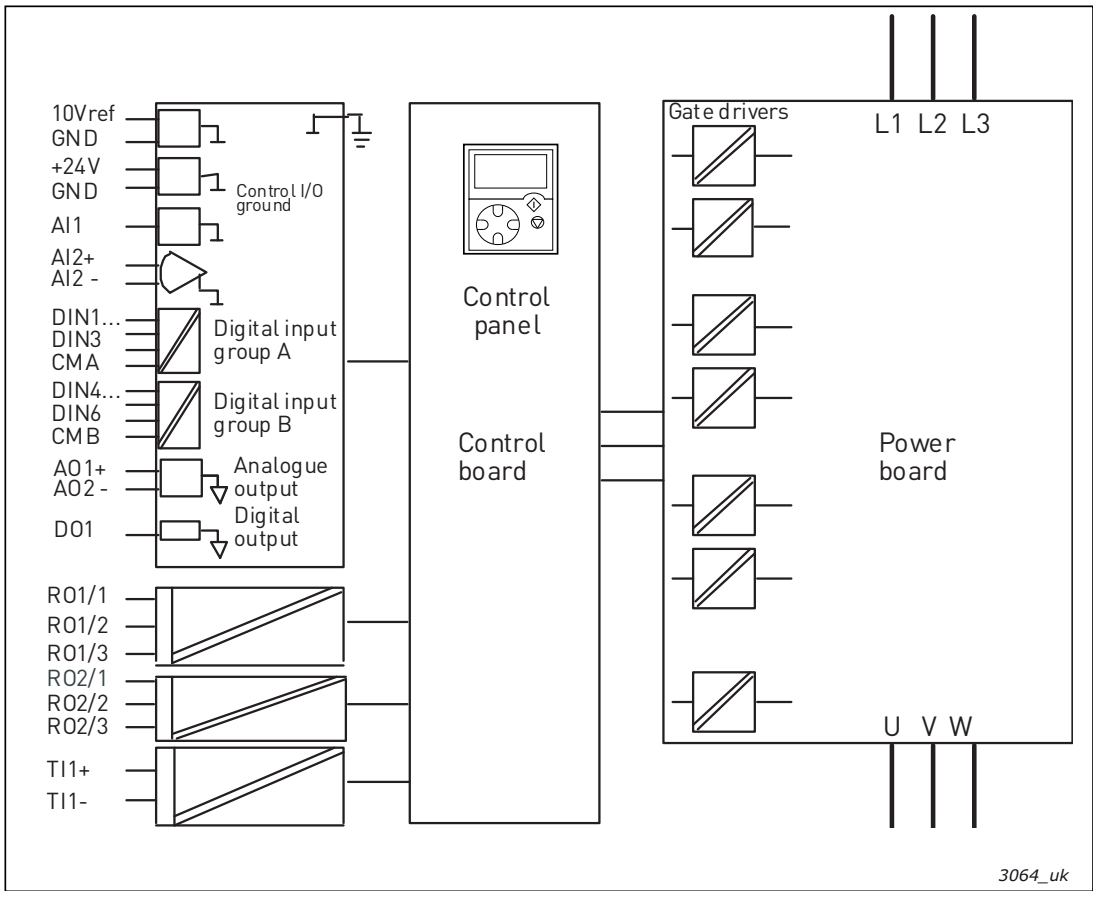

Figure 64. Galvanic isolation barriers

6.2.3 CONTROL TERMINAL SIGNALS

Table 47. Control I/O terminal signals

Terminal		Signal	Technical information
OPT-A1			
1	+10 Vref	Reference voltage	Maximum current 10 mA
2	AI1+	Analogue input, voltage or current	Selection V or mA with jumper block X1 (see page 116): Default:0– +10 V (Ri = 200 kΩ) (-10 V...+10 V Joy-stick control, selected with a jumper) 0– 20 mA (Ri = 250 Ω)
3	GND/AI1–	Analogue input common	Differential input if not connected to ground; Allows ±20 V differential mode voltage to GND
4	AI2+	Analogue input, voltage or current	Selection V or mA with jumper block X2 (see page 116): Default:0– 20 mA (Ri = 250 Ω) 0– +10 V (Ri = 200 kΩ) (-10 V...+10 V Joy-stick control, selected with a jumper)
5	GND/AI2–	Analogue input common	Differential input if not connected to ground; Allows ±20 V differential mode voltage to GND
6	24 V_{out} (bidirectional)	24 V auxiliary voltage	±15%, maximum current 250 mA Can also be used as external power backup for the control unit (and fieldbus)
7	GND	I/O ground	Ground for reference and controls
8	DIN1	Digital input 1	R_i = min. 5 kΩ 18...30 V = "1"
9	DIN2	Digital input 2	
10	DIN3	Digital input 3	
11	CMA	Digital input common A for DIN1, DIN2 and DIN3.	Must be connected to GND or 24 V of I/O terminal or to external 24 V or GND Selection with jumper block X3 (see page 116):
12	24 V_{out} (bidirectional)	24 V auxiliary voltage	Same as terminal #6
13	GND	I/O ground	Same as terminal #7
14	DIB4	Digital input 4	R_i = min. 5 kΩ
15	DIB5	Digital input 5	
16	DIB6	Digital input 6	
17	CMB	Digital input common B for DIB4, DIB5 and DIB6	Must be connected to GND or 24 V of I/O terminal or to external 24 V or GND Selection with jumper block X3 (see page 116):

Table 47. Control I/O terminal signals

Terminal		Signal	Technical information	
18	AO1+	Analogue signal (+output)	Output signal range: Current 0(4)–20 mA, R_L max 500 Ω or Voltage 0—10 V, R_L >1 kΩ Selection with jumper block X6 (see page 116):	
19	AO1–	Analogue output common		
20	DO1	Open collector output	Maximum U_{in} = 48 V DC Maximum current = 50 mA	
OPT-A2				
21	RO1/1	Relay output 1	Max. switching voltage	250 V AC, 125 V DC
22	RO1/2		Max. switching current	8 A/24 V DC, 0.4 A/250 V DC
23	RO1/3		Min. switching load	5 V/10 mA
24	RO2/1	Relay output 2	Max. switching voltage	250 V AC, 125 V DC
25	RO2/2		Max. switching current	8 A/24 V DC, 0.4 A/250 V DC
26	RO2/3		Min. switching load	5 V/10 mA

6.2.3.1 Digital input signal inversions

The active signal level depends on which potential the common inputs CMA and CMB (terminals 11 and 17) are connected to. The alternatives are either +24 V or ground (0 V). See Figure 65.

The 24 V control voltage and the ground for the digital inputs and the common inputs (CMA, CMB) can be either internal or external.

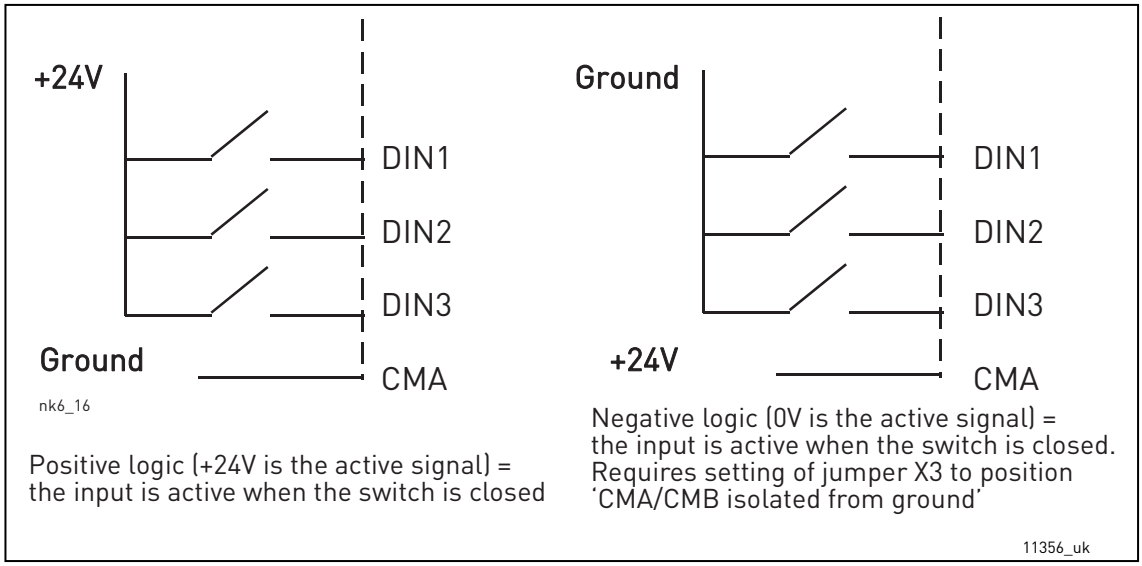

Figure 65. Positive/Negative logic

6.2.3.2 Jumper selections on the OPT-A1 basic board

The user is able to customise the functions of the AC drive to better suit his needs by selecting certain positions for the jumpers on the OPT-A1 board. The positions of the jumpers determine the signal type of analogue and digital inputs.

On the A1 basic board, there are four jumper blocks X1, X2, X3 and X6 each containing eight pins and two jumpers. The selectable positions of the jumpers are shown in Figure 67.

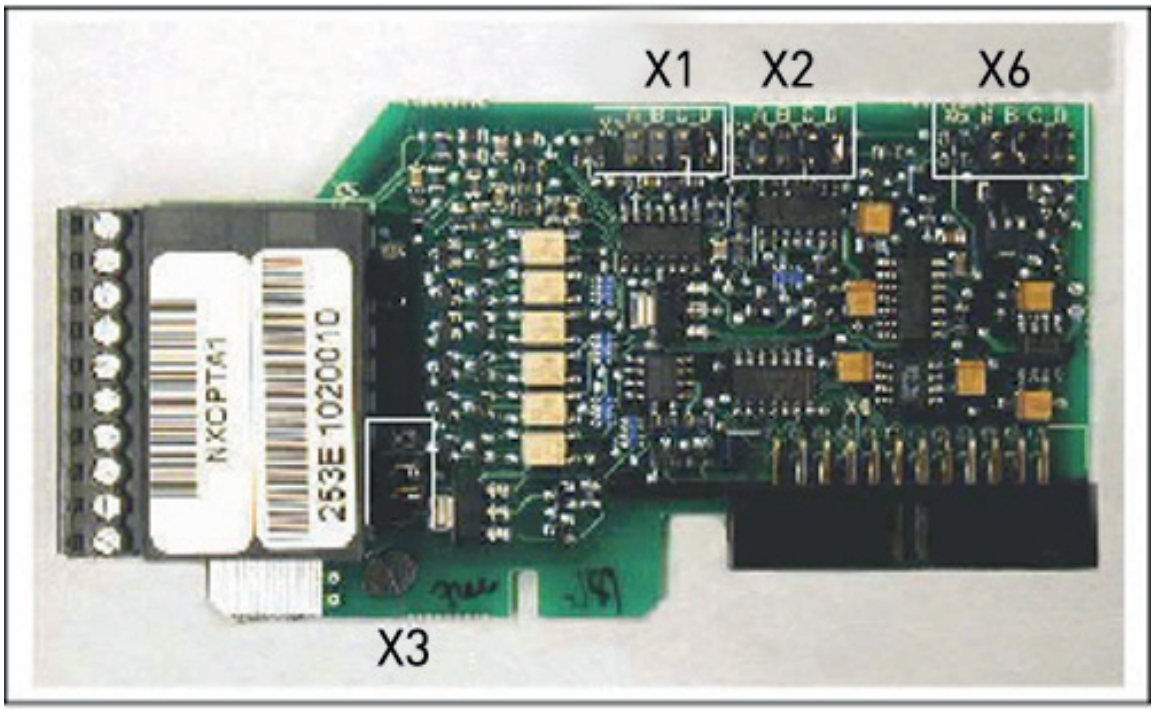

11357_00

Figure 66. Jumper blocks on OPT-A1

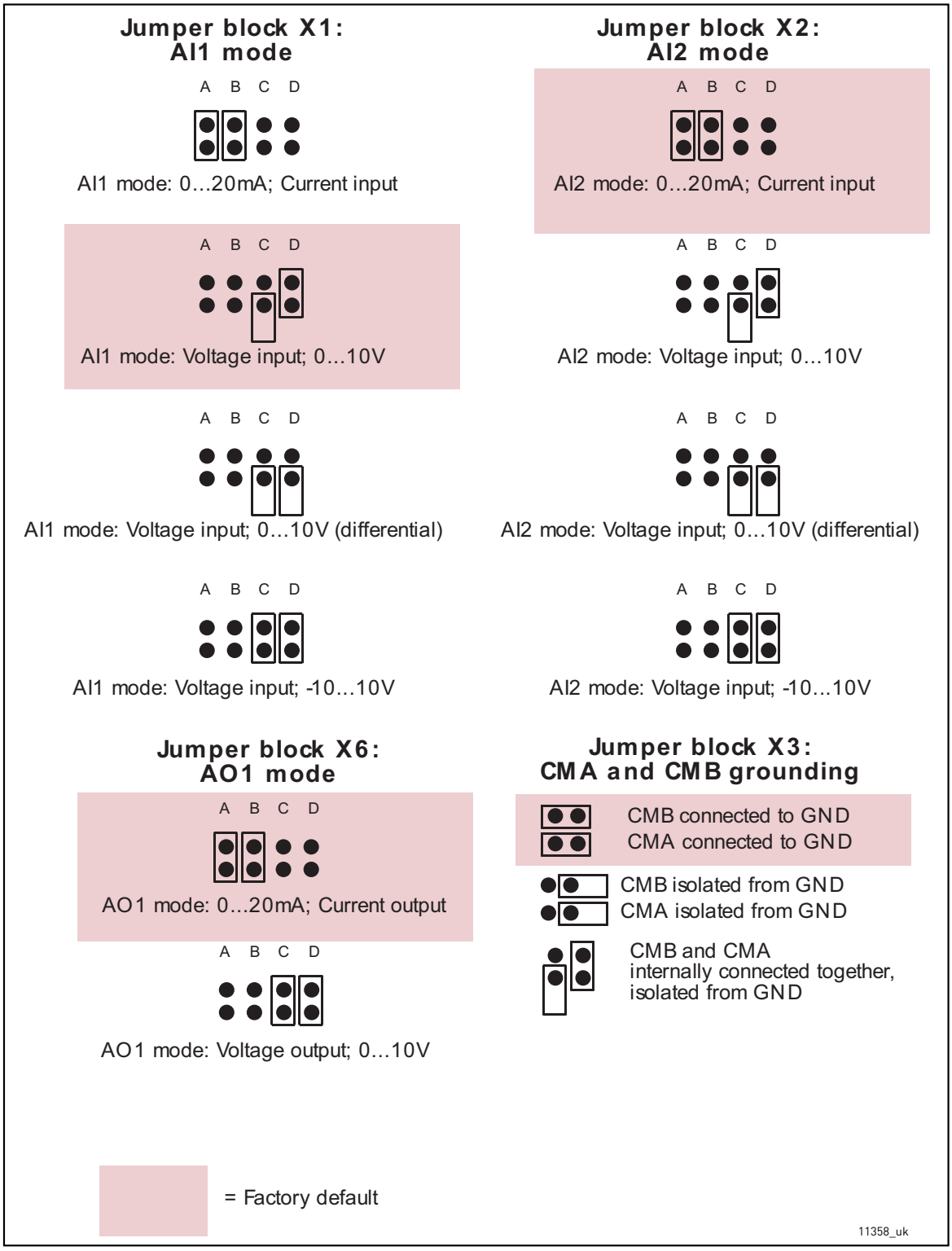

Figure 67. Jumper selection for OPT-A1



If you change the AI/AO signal content also remember to change the corresponding board parameter in menu M7.

6.2.4 CONTROL UNIT MOUNTING BOX

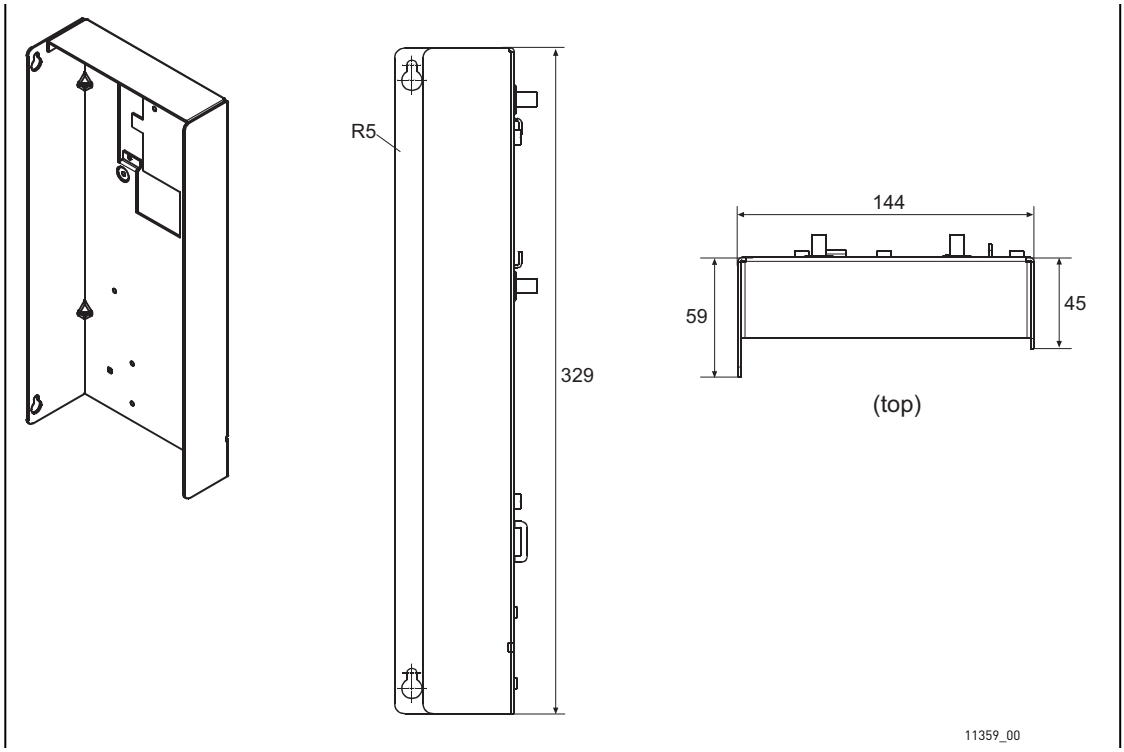

Figure 68. Control unit mounting box dimensions

6.2.4.1 Installing the control unit mounting box

The control unit of VACON® NX Liquid-cooled drive is mounted into a metal box which then can be placed inside the enclosure. VACON® alpha-numeric or graphical keypad can be used to control the drive. The keypad is connected to the control unit with an RS232 cable and mounted on the enclosure door. Pay special attention to the grounding of the cable, see instructions below.

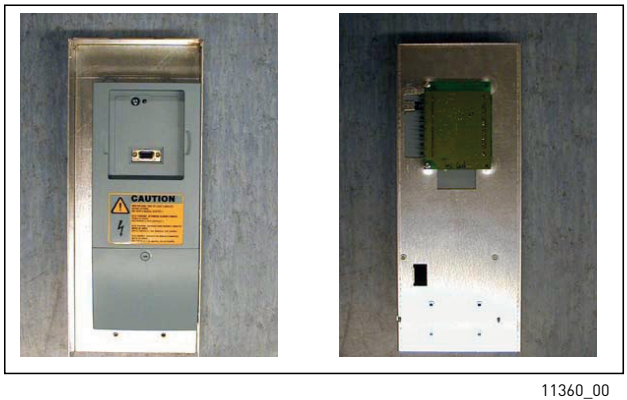

Figure 69. Control unit installed into the mounting box; Left: front; Right: back

1. If the keypad sits in its place on the control unit, remove the keypad.
2. Connect the male end of the keypad cable to the D-connector of the control unit. Use VACON® RS232 cable included in the delivery. Figure 1.
3. Run the cable over the top of the box and secure with plastic band on the backside. Figure 2.

4. Grounding of keypad cable: Earth the keypad cable in the mounting box frame by fixing the branch cable with a screw underneath the control unit. See Figures 3 and 4.
5. Mount the control unit mounting box in the front-left corner of the enclosure using two screws as shown in Figure 5. **NOTE!** Do not install the mounting box floating (with e.g. plastic screws). To ensure a proper grounding of the control unit box assembly, we recommend that an additional grounding cable be drawn from the mounting box and connected to the cabinet frame. Use a braided copper cable designed for high-frequency signals. Remember to remove the paint from the enclosure grounding point to ensure proper connection for the grounding cable.
6. Connect the optical cables (or the flat cable) to the power unit. See Chapter 6.3.2 and Figures 6 and 7.
7. Connect the female end of the keypad cable to keypad on the enclosure door, Figure 8. Use a cable channel for the cable run, Figure 9.


11361_00

Figure. 1


11362_00

Figure. 2

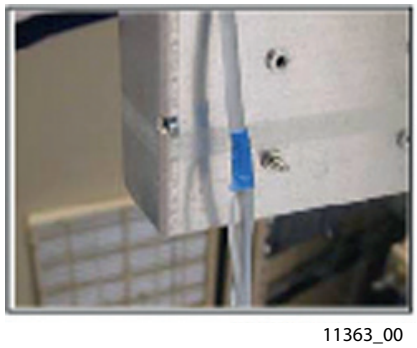
11363_00

Figure. 3

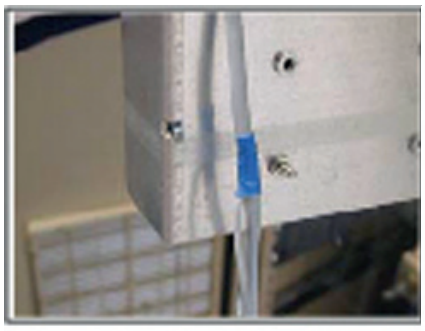
11363_00

Figure. 4

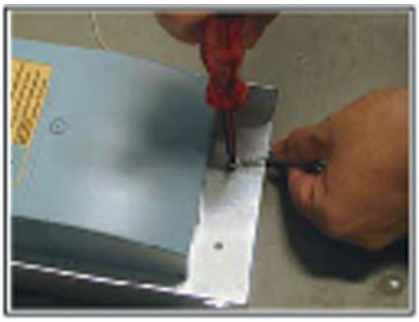
11364_00

Figure. 5


11365_00

Figure. 6

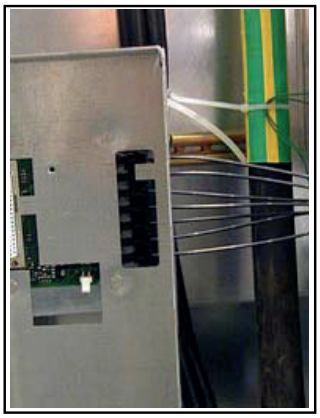
11366_00

Figure. 7


11367_00

Figure. 8


11368_00

Figure. 9

6.3 INTERNAL CONNECTIONS

As a general rule, all internal electrical and communications connections are made at the factory. However, if modules have to be moved, for example, and the connections therefore removed, you will have to re-establish the connections between 1) the Power Unit ASIC and the Driver Board(s) on the one hand and 2) the Power Unit ASIC and the Optical Cable Adapter Board on the other.

6.3.1 CONNECTIONS BETWEEN POWER UNIT ASIC AND DRIVER BOARDS

See the figures and tables on the following pages for the correct connection of internal electrical and communications connections.

NOTE! The minimum optical cable bending radius is 50 mm.

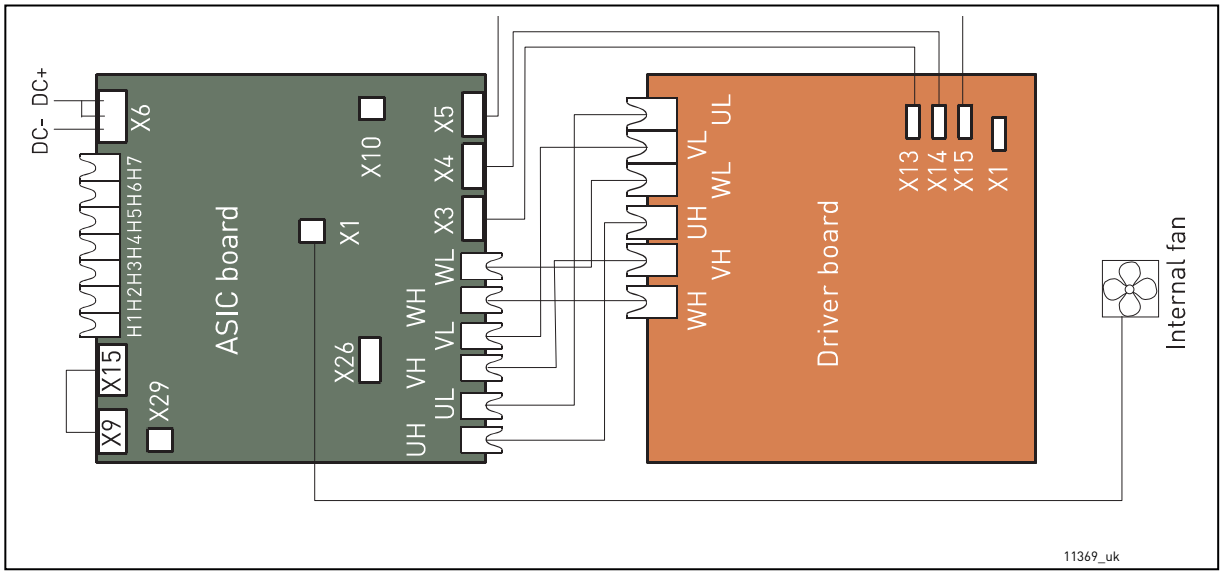

Figure 70. Terminals and connections between ASIC and driver board (CH61, CH62 and CH72)

Terminals on ASIC board	
X9	Charge feedback
X15	Charging relay output
X6	Connect to DC-link on AC drive
X29	Flow supervision input
X26	Star Coupler terminal for drives greater than CH61
X10	+24 V supply voltage to control board
X3	Connect to terminal X13 on driver board
X4	Connect to terminal X14 on driver board
X5	Connect to terminal X15 on driver board
X1	Driver board fan power connection

Gate driver signals from ASIC to driver board	
UH	Connect to UH on driver board
UL	Connect to UL on driver board
VH	Connect to VH on driver board
VL	Connect to VL on driver board
WH	Connect to WH on driver board
WL	Connect to WL on driver board
Terminal X1 on driver board	
X1	Connect to DC-link on AC drive

NOTE! Terminals X9 and X15 are connected by default. The cable can be removed if the signal is received from other source.

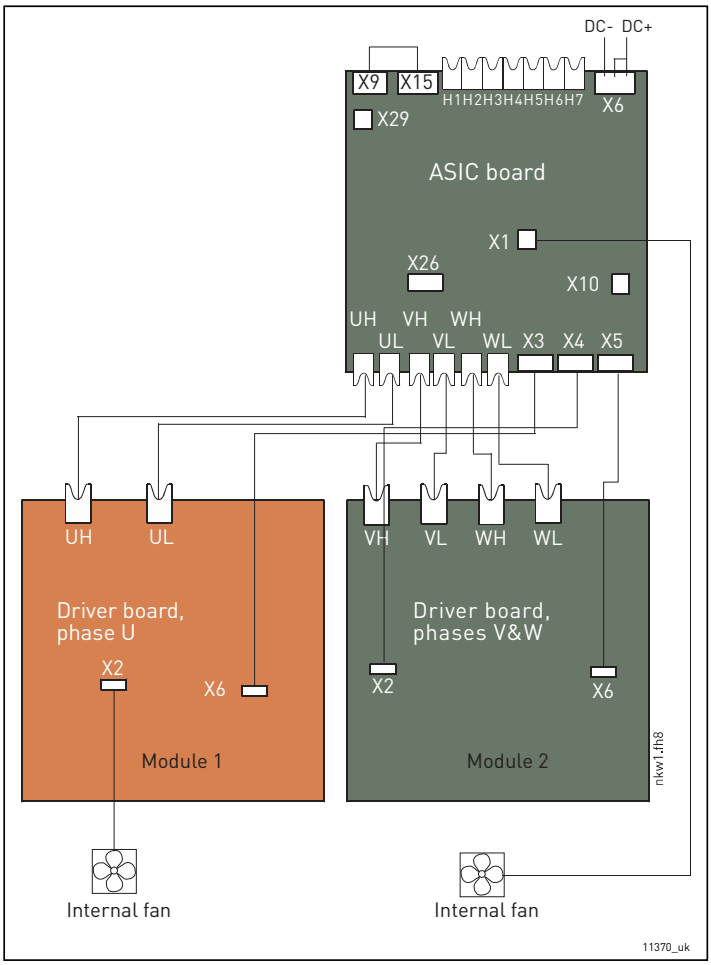

Figure 71. Terminals and connections between ASIC and driver boards (CH63)

Terminals on ASIC board	
X9	Charge feedback
X15	Charging relay output
X6	Connect to DC-link on AC drive
X29	Flow supervision input
X26	Star Coupler terminal for drives greater than CH61
X10	+24 V supply voltage to control board
X3	Connect to terminal X6 on phase U driver board
X4	Connect to terminal X2 on phase V/W driver board
X5	Connect to terminal X6 on phase V/W driver board
X1	Internal fan power connection for Mod. 2

Gate driver signals from ASIC to driver board	
UH	Connect to UH on Phase U driver board
UL	Connect to UL on Phase U driver board
VH	Connect to VH on Phase V/W driver board
VL	Connect to VL on Phase V/W driver board
WH	Connect to WH on Phase V/W driver board
WL	Connect to WL on Phase V/W driver board
Terminal X2 on Phase U driver board	
X2	Internal fan power connection for Mod. 1

NOTE! Terminals X9 and X15 are connected by default. The cable can be removed if the signal is received from other source.

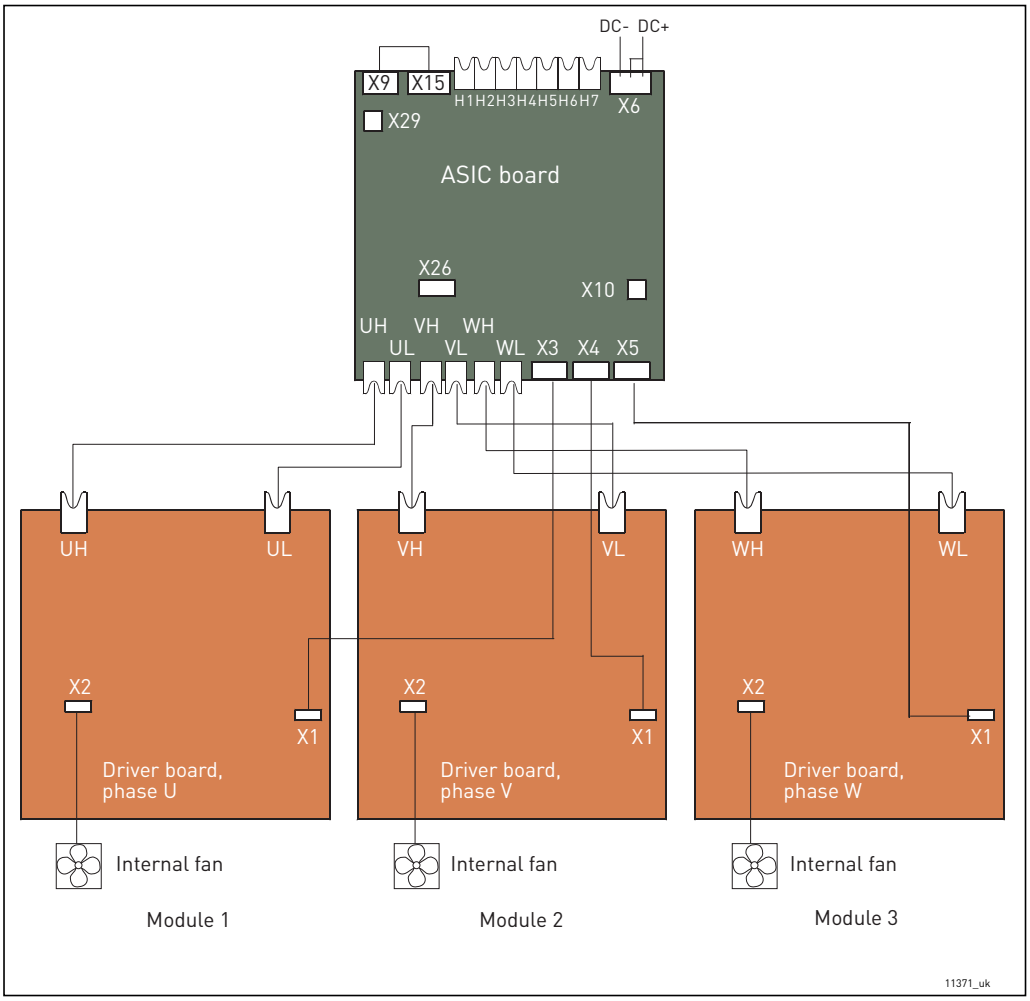

Figure 72. Terminals and connections between ASIC and driver boards (CH64 and CH74)

Terminals on ASIC board	
X9	Charge feedback
X15	Charging relay output
X6	Connect to DC-link on AC drive
X29	Flow supervision input
X26	Star Coupler terminal for drives greater than CH61
X10	+24 V supply voltage to control board
X3	Connect to terminal X1 on phase U driver board
X4	Connect to terminal X1 on phase V driver board
X5	Connect to terminal X1 on phase W driver board

Gate driver signals from ASIC to driver board	
UH	Connect to UH on Phase U driver board
UL	Connect to UL on Phase U driver board
VH	Connect to VH on Phase V driver board
VL	Connect to VL on Phase V driver board
WH	Connect to WH on Phase W driver board
WL	Connect to WL on Phase W driver board
Terminal X2 on Phase driver board	
X2	Internal fan power connection

NOTE! Terminals X9 and X15 are connected by default. The cable can be removed if the signal is received from other source.

6.3.2 CONNECTIONS BETWEEN POWER UNIT ASIC AND THE CONTROL UNIT

The communication connections between the VACON® NX Liquid-cooled drive power unit and the control unit (see Chapter 6.2) can be established using either the conventional round cable (standard in chassis CH3, CH4 and CH5) or optical cable (all chassis). Note that for chassis CH61 and greater, only optical cables can be used.

6.3.2.1 Connections with round cable (Chassis CH3, CH4 and CH5)

The communication connection between the drive power unit and the control unit in chassis CH3, CH4 and CH5 are primarily made with conventional round cable and D-connectors at both ends.

Remove the protective cover to reveal the D-connector on the power unit. Connect the one end of the communication cable to the D-connector of the power unit and the other end to the control unit. If the Optical Cable Adapter Board (see below) sits on the D-connector of the control unit you have to remove it first. See Figure 73 below.

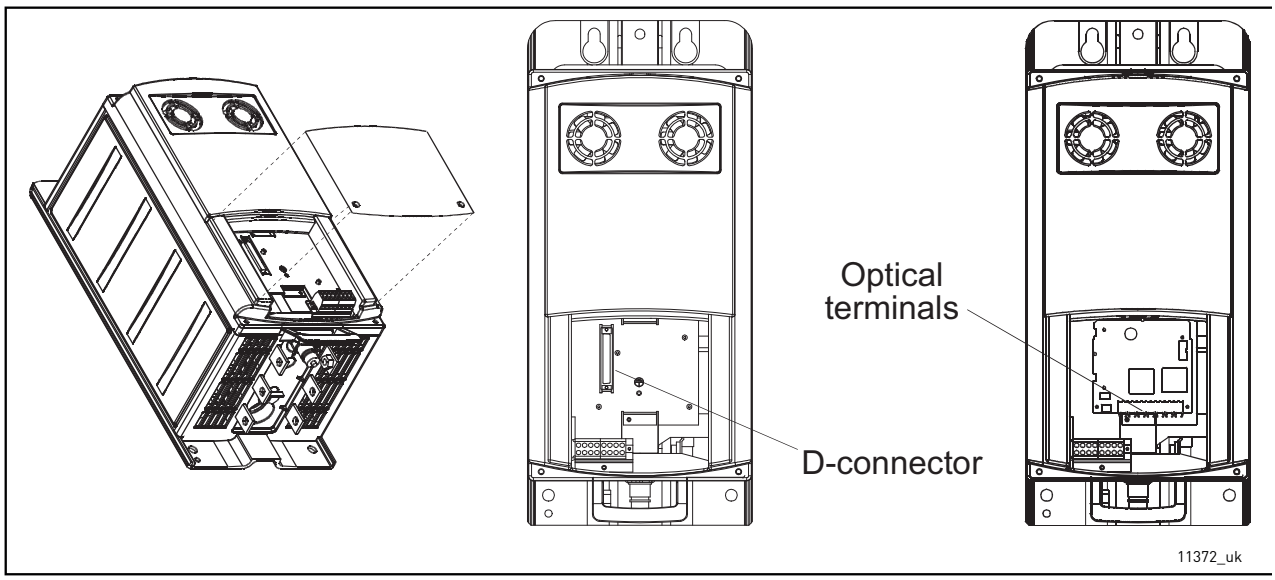

Figure 73.

6.3.2.2 Connections with optical cable (Chassis CH3, CH4, CH5, CH6x and CH7x)

If optical cables are used to link the power unit and the control board, a special Optical Cable Adapter Board connected to the control board D-connector must be used. To connect the optical cables to the power unit, you will have to remove the protective cover first. Connect the optical cables as shown in Figure 73 and Figure 74. See also Chapter 6.2.4.

The maximum length of the optical cable is 8 m.

The control unit uses 24 V DC supplied from the ASIC board, the location of which can be seen in the figures below. To access the board, remove the protective cover in front of the module. Connect the power supply cable to the X10 connector on the ASIC board and to the X2 connector on the rear side of the control unit.

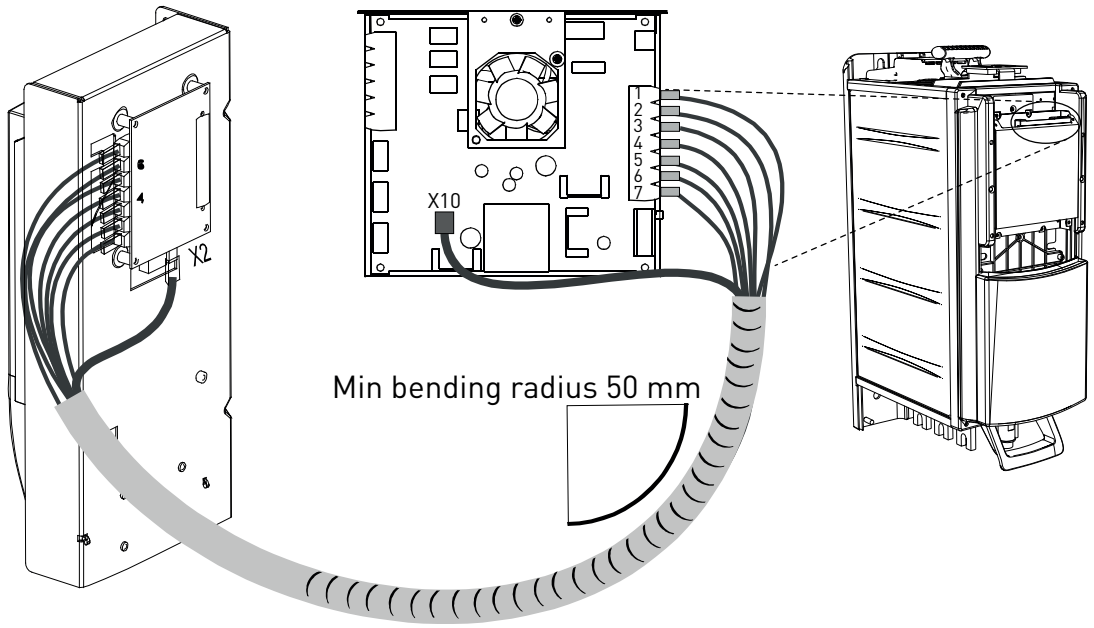

Figure 74. Connecting the power supply and control cables to the control unit, Ch6x

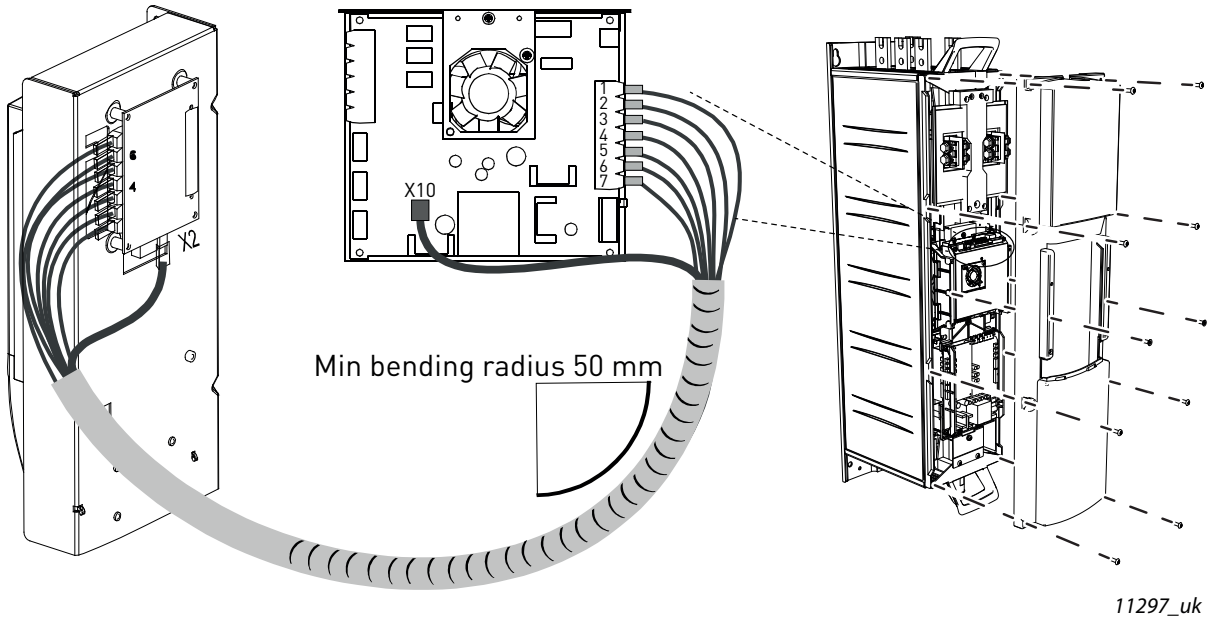

Figure 75. Connecting the power supply and control cables to the control unit, Ch7x

Each fibre optic cable has a number 1...7 marked on the cable shield at both cable ends. Connect each cable to the connectors marked with the same number 1...7 on the ASIC board and on the rear side of the control unit.

Optical terminals on Optical cable adapter board:

H1	Gate control enable
H2	Phase U control
H3	Phase V control
H4	Phase W control
H5	ADC synchronization
H6	VaconBus data from control board to ASIC
H7	VaconBus data from ASIC to control board

Other terminals on adapter board:

X1	Control board connection
X2	Supply voltage 24 Vin (from power unit ASIC)
X3	Supply voltage 24 Vin (customer); - Max. current 1A - Terminal #1: + - Terminal #2: –



CAUTION! Be careful when connecting the fibre optic cables!
Connecting the wires incorrectly
may damage power electronic components.

NOTE! The minimum optical cable bending radius is 50 mm.

NOTE! Terminals X2 and X3 can be in use simultaneously. However, if the +24 V supply from the control I/O terminals (e.g. from board OPT-A1) is used, this terminal must be protected with a diode.

Fix the cable bundle at two or more points, at least one at each end, to prevent damages to the cables.

Fasten the removed cover(s) on the inverter module when the work is finished.

6.3.2.3 Connections with optical cable (Chassis 2xCH64 and 2xCH74)

If optical cables are used to link the power unit and the control board, a special Optical Cable Adapter Board connected to the control board D-connector must be used. To connect the optical cables to the power unit, you will have to remove the protective cover first. Connect the optical cables as shown in Figure 77 and Figure 77. See also Chapter 6.2.4.

The maximum length of the optical cable is 8 m.

The control unit uses 24 V DC supplied from the ASIC board, which is located on the left side of the power unit 1. To access the board, remove the protective cover in front of the power module. Connect the power supply cable to the X10 connector on the ASIC board and to the X2 connector on the rear side of the control unit.

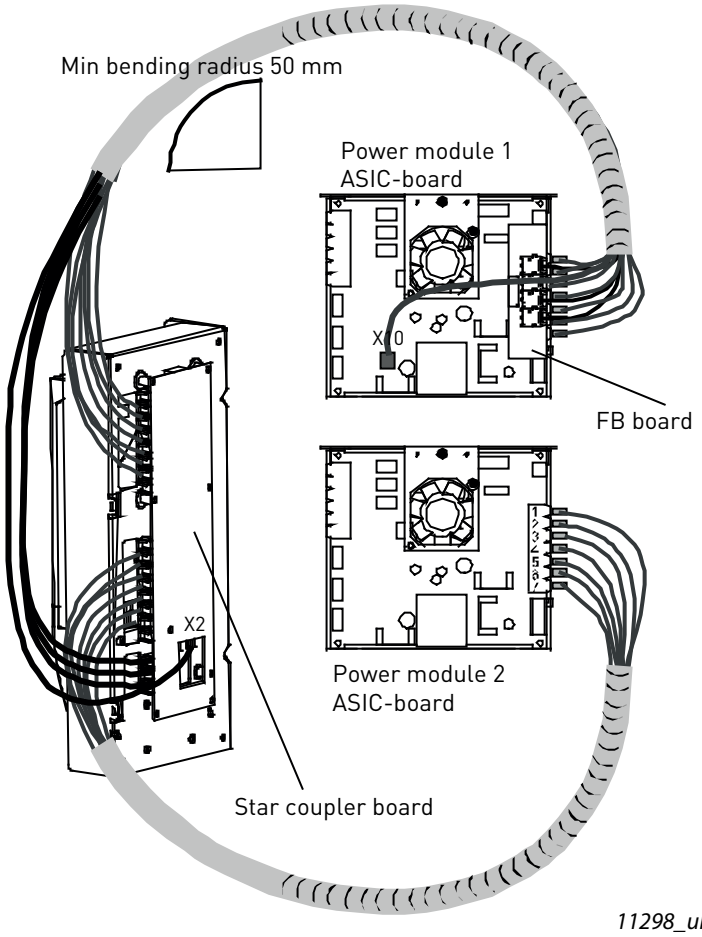

Figure 76. Connecting the power supply and control cables to the control unit, 2xCh64 and 2xCH74

Each fibre optic cable has a number 1...8 and 11...18 marked on the cable shield at both cable ends. Connect each cable to the connectors marked with the same number on the ASIC board and on the rear side of the control unit. Additionally, you may have to connect the 4 fibre cables from the feedback board to the star coupler board. The list of the optic signals can be found in Figure 77.

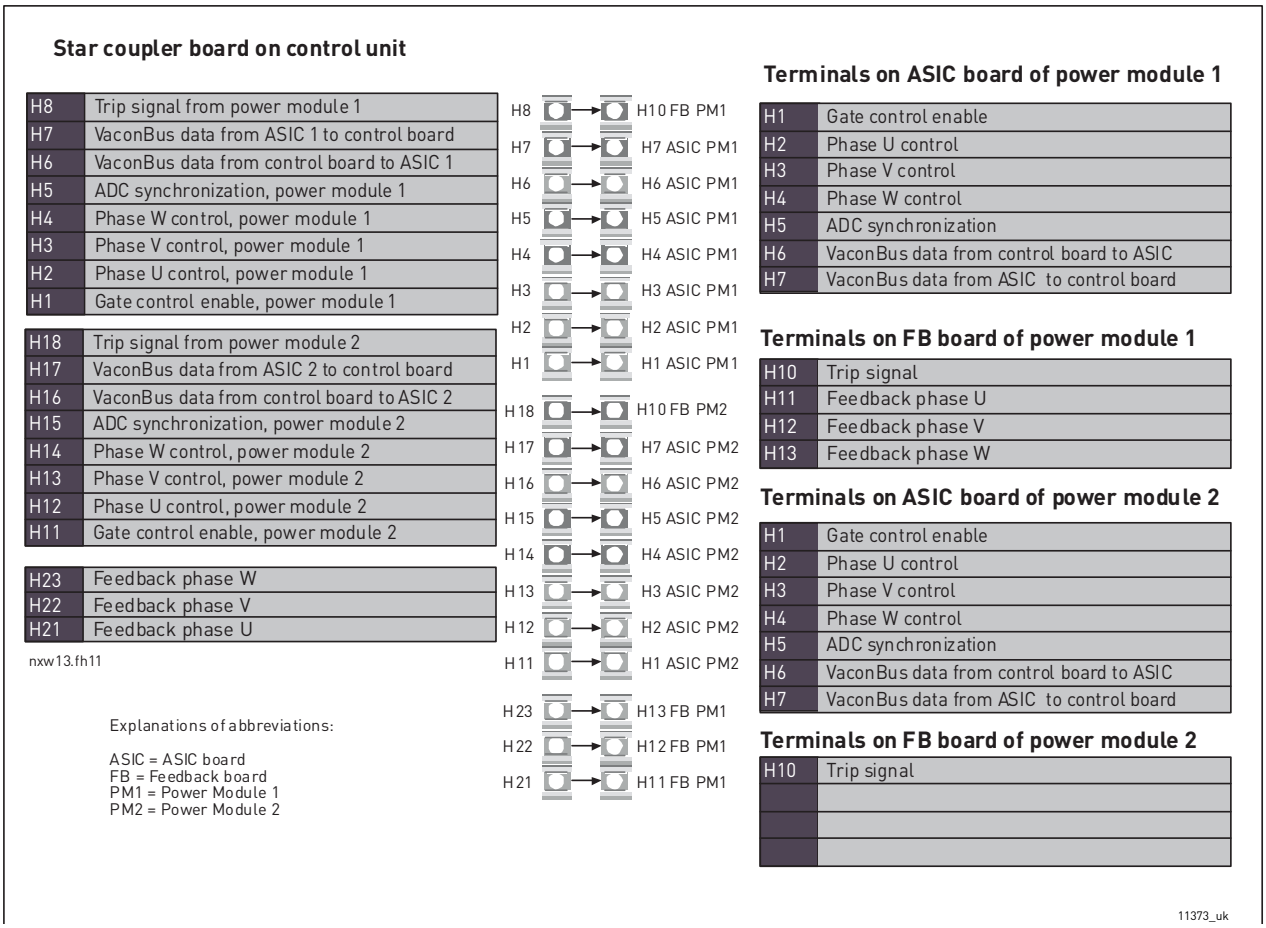

Figure 77. Terminals and connections between the star-coupler board, ASIC boards and feedback boards (CH64 and CH74)



Be careful when connecting the fibre optic cables! Connecting the wires incorrectly may damage power electronic components.

NOTE! The minimum optical cable bending radius is 50 mm.

NOTE! Terminals X2 and X3 can be in use simultaneously. However, if the +24 V supply from the control I/O terminals (e.g. from board OPT-A1) is used, this terminal must be protected with a diode.

Fix the cable bundle at two or more points, at least one at each end, to prevent damages to the cables.

Fasten the removed cover(s) on the inverter module when the work is finished.

6.3.3 CONNECTIONS BETWEEN MAINS DEVICE AND INVERTER POWER MODULE

The dimensions in the table below must be taken into account if some kind of mains device (e.g. fuse, switch fuse, contactor) is used in the input line between the mains and the VACON® Liquid-cooled inverter.

Table 48. Connections from mains device to drive

Chassis	Type	Connection		
		Conductor cross section [mm^2]	Busbar size (flexible connection)	Busbar size (bare Cu)
CH3	0016_5	6		
	0022_5			
	0031_5			
CH3	0038_5	10		
	0045_5			
	0061_5			
CH4	0072_5	25		
	0087_5			
	0105_5			
CH4	0140_5	50		
CH5	0168_5	70	2*24*1	
CH5	0205_5	95		
CH5	0261_5	120		1*50*5
CH61	0300_5	2*70	5*32*1	
CH61	0385_5			
CH72	0460_5	2*95		
CH72	0520_5	2*120		
CH72	0590_5	2*150		1*80*5
CH72	0650_5		2*(6*40*1)	
CH72	0730_5			
CH63	0820_5			1*100*5
CH63	0920_5			
CH63	1030_5			
CH63	1150_5			
CH74	1370_5			2*100*5
CH74	1640_5			
CH74	2060_5			3*100*5
CH74	2300_5			

Table 49. Connections from mains device to drive

Chassis	Type	Connection		
		Conductor cross section [mm^2]	Busbar size (flexible connection)	Busbar size (bare Cu)
CH61	0170_6	70	2*24*1	
	0208_6	95		
	0261_6	120		1*50*5
CH62	0325_6	2*70	5*32*1	
	0385_6			
	0416_6	2*95		
	0460_6			
	0502_6	2*120		
CH63	0590_6	2*150	2*(6*40*1)	1*80*5
	0650_6			
	0750_6			
CH64	0820_6			1*100*5
	0920_6			
	1030_6			
	1180_6			2*100*5
	1300_6			
	1500_6			

7. CONTROL KEYPAD

The control keypad is the link between the VACON® AC drive and the user. The VACON® NX control keypad features an alphanumeric display with seven indicators for the Run status (RUN, ↻↻, READY, STOP, ALARM, FAULT) and three indicators for the control place (I/O term/ Keypad/ BusComm). There are also three Status Indicator LEDs (green - green - red), see below.

The control information, i.e. the number of menu, description of menu or the displayed value and the numeric information are presented on three text lines.

The AC drive is operable through the nine push-buttons of the control keypad. Furthermore, the buttons serve the purposes of parameter setting and value monitoring.

The keypad is detachable and isolated from the input line potential.

7.1 INDICATIONS ON THE KEYPAD DISPLAY

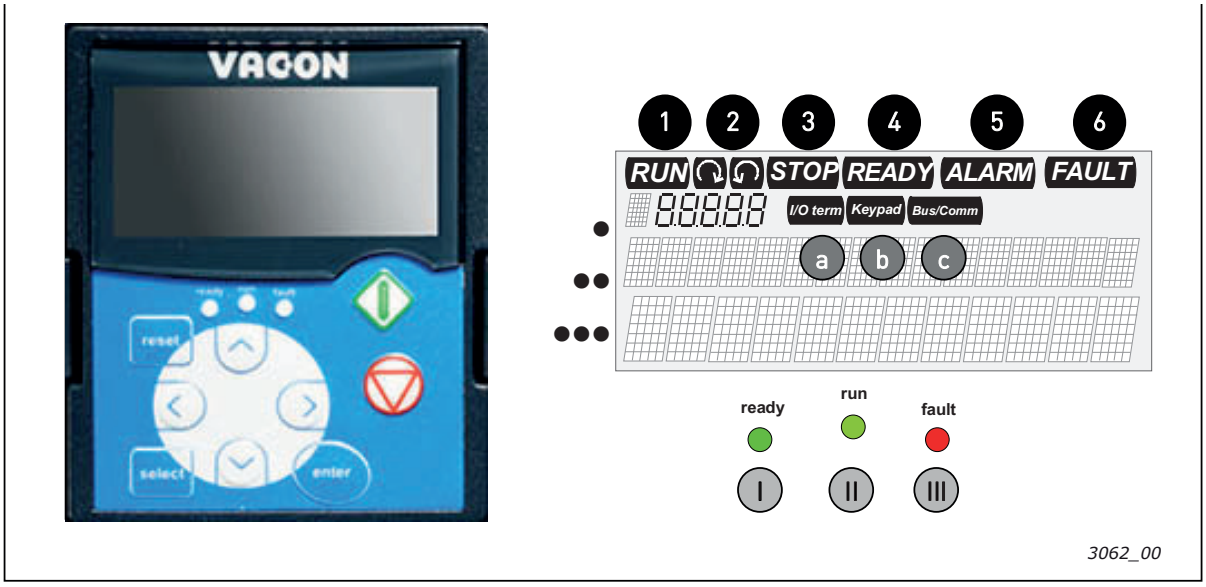

Figure 78. VACON® control keypad and drive status indications

7.1.1 DRIVE STATUS INDICATIONS

The drive status indications tell the user what the status of the motor and the drive is and whether the motor control software has detected irregularities in motor or AC drive functions.

1	RUN	=	Motor is running; Blinks when the stop command has been given but the frequency is still ramping down.
2	↻↻	=	Indicates the direction of motor rotation.
3	STOP	=	Indicates that the drive is not running.
4	READY	=	Lights when AC power is on. In case of a trip, the symbol will not light up.
5	ALARM	=	Indicates that the drive is running outside a certain limit and a warning is given.
6	FAULT	=	Indicates that unsafe operating conditions were encountered due to which the drive was stopped.

7.1.2 CONTROL PLACE INDICATIONS

The symbols I/O term, Keypad and Bus/Comm (see Figure 78) indicate the choice of control place made in the Keypad Control Menu (see Chapter 7.3.3).

a	I/O term	=	I/O terminals are the selected control place; i.e. START/STOP commands or reference values etc. are given through the I/O terminals.
b	Keypad	=	Control keypad is the selected control place; i.e. the motor can be started or stopped, or its reference values etc. altered from the keypad.
c	Bus/ Comm	=	The AC drive is controlled through a fieldbus.

7.1.3 STATUS LEDS (GREEN – GREEN – RED)

The status LEDs light up in connection with the READY, RUN and FAULT drive status indicators.

I	●	=	Illuminates with the AC power connected to the drive and no faults are active. Simultaneously, the drive status indicator READY is lit up.
II	●	=	Illuminates when the drive is running. Blinks when the STOP button has been pushed and the drive is ramping down.
III	●	=	Blinks when unsafe operating conditions were encountered due to which the drive was stopped (Fault Trip). Simultaneously, the drive status indicator FAULT blinks on the display and the fault description can be seen, see Chapter 7.3.4, Active Faults.

7.1.4 TEXT LINES

The three text lines (•, ••, •••) provide the user with information on his present location in the keypad menu structure as well as with information related to the operation of the drive.

•	=	Location indication; displays the symbol and number of menu, parameter etc. Example: M2 = Menu 2 (Parameters); P2.1.3 = Acceleration time
••	=	Description line; Displays the description of menu, value or fault.
•••	=	Value line; Displays the numerical and textual values of references, parameters etc. and the number of submenus available in each menu.

7.2 KEYPAD PUSH-BUTTONS

The VACON® alphanumeric control keypad features 9 push-buttons that are used for the control of the AC drive (and motor), parameter setting and value monitoring.

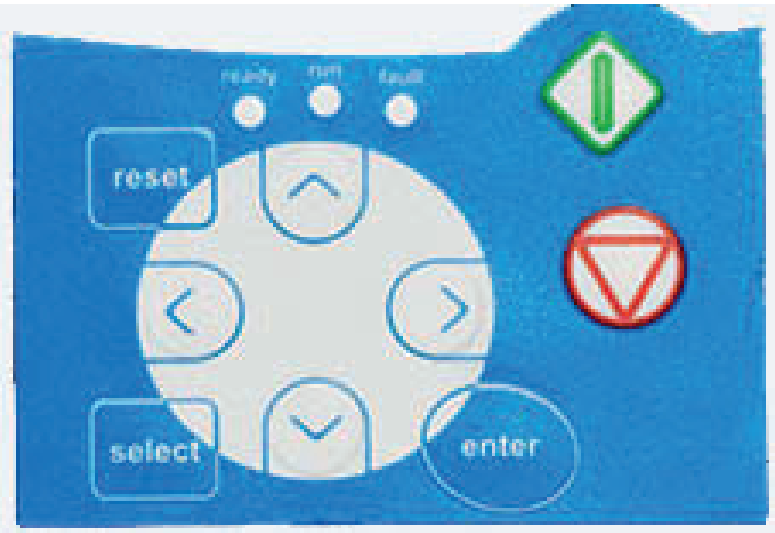

3063_00

Figure 79. Keypad push-buttons

7.2.1 BUTTON DESCRIPTIONS

reset = This button is used to reset active faults (see Chapter 7.3.4).

select = This button is used to switch between two latest displays. May be useful when you want to see how the changed new value influences some other value.

enter = The Enter button serves for:
1) confirmation of selections
2) fault history reset (2...3 seconds)

▲ + = Browser button up
Browse the main menu and the pages of different submenus.
Edit values.

- ▼ = Browser button down
Browse the main menu and the pages of different submenus.
Edit values.

◄ = Menu button left
Move backward in menu.
Move cursor left (in parameter menu).
Exit edit mode.
Swap between keypad control and another control as active control place (see Chapter 7.2.1.1)

► = Menu button right
Move forward in menu.
Move cursor right (in parameter menu).
Enter edit mode.

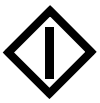

Start button
= Pressing this button starts the motor if the keypad is the active control place. See Chapter 7.3.3.



= Stop button. Pressing this button stops the motor (unless disabled by parameter R3.4/R3.6). See Chapter 7.3.3.

7.2.1.1 Swap between keypad control and another control as active control place

With the I/O terminals or fieldbus selected as the active control place, it is also possible to change the control to the local keypad and back to the original control place.

Irrespective of your location in the menu structure, keep the ◄ button pushed down for 5 seconds. This will activate the Start & Stop keypad control. The display will jump to the editing mode of *R3.2 Keypad Reference* and you will be able to enter the desired frequency on the keypad. Push the start button to start the drive.

Pushing the ◄ button again for 5 seconds returns the control to the original control place (active control place, P3.1) and its reference. **NOTE:** The motor starts if the start command of the active control place is ON and run at the formerly set reference. The keypad display will show monitoring value *V1.1 Output Frequency*.

If any of the parameter values in menu M3 is changed in between the swapping the keypad reference will be reset to 0.00 Hz.

7.3 NAVIGATION ON THE CONTROL KEYPAD

The data on the control keypad are arranged in menus and submenus. The menus are used for example for the display and editing of measurement and control signals, parameter settings (Chapter 7.3.2), reference values and fault displays (Chapter 7.3.4). Through the menus, you can also adjust the contrast of the display (page 150).

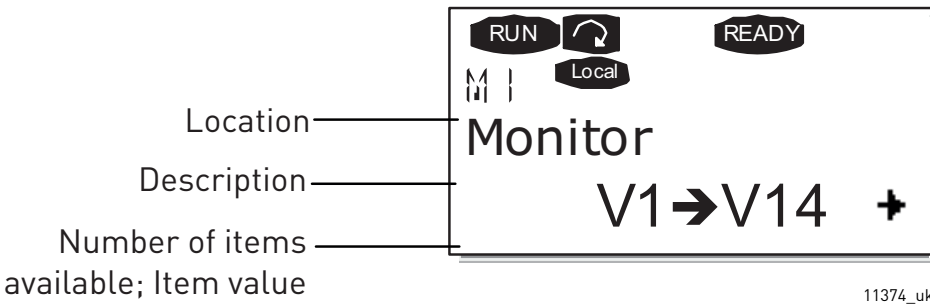

The first menu level consists of menus M1 to M7 and is called the Main menu. The user can navigate in the main menu using the Browser buttons up and down. The desired submenu can be entered from the main menu using the Menu buttons. When there still are pages to enter under the currently displayed menu or page, you can see an arrow (►) in the lower right corner of the display and by pressing the Menu button right, you can reach the next menu level.

The control keypad navigation chart is shown on the next page. Note that the menu M1 is located in the lower left corner. From there you will be able to navigate your way up to the desired menu using the menu and browser buttons.

More detailed descriptions of the menus you will find later in this Chapter.

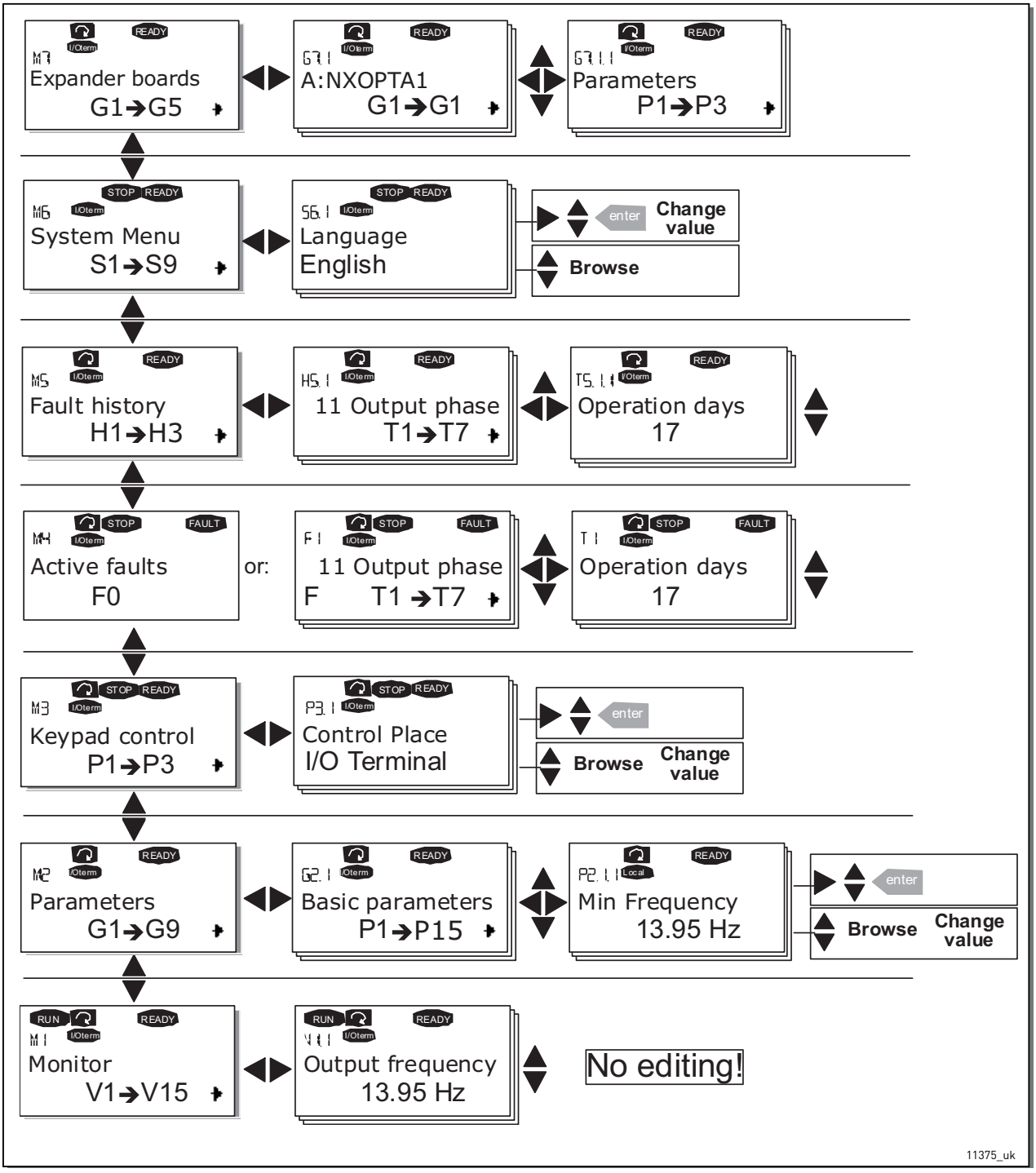

Figure 80. Keypad navigation chart

7.3.1 MONITORING MENU (M1)

You can enter the Monitoring menu from the Main menu by pushing the Menu button right when the location indication M1 is visible on the first line of the display. How to browse through the monitored values is presented in Figure 81.

The monitored signals carry the indication V#.# and they are listed in Table 50. The values are updated once every 0.3 seconds.

This menu is meant only for signal checking. The values cannot be altered here. For changing values of parameters see Chapter 7.3.2.

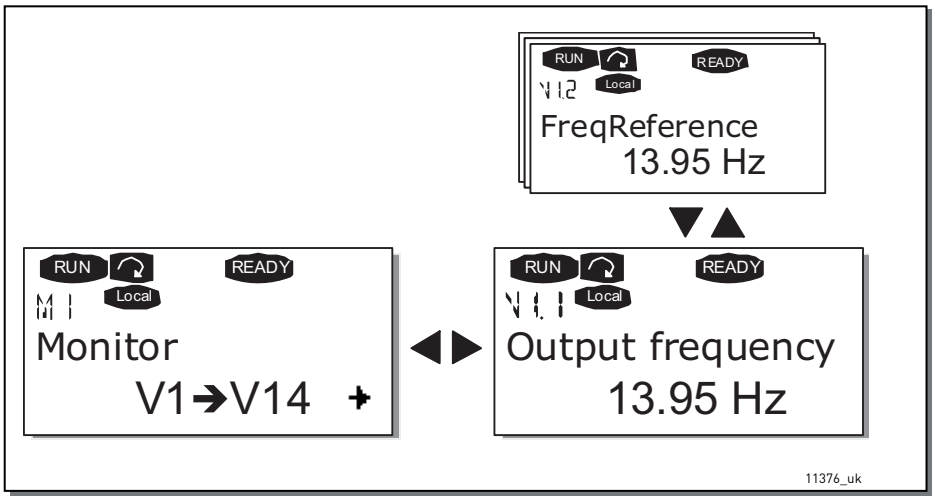

Figure 81. Monitoring menu

Table 50. Monitored signals

Code	Signal name	Unit	Description
V1.1	Output frequency	Hz	Frequency to the motor
V1.2	Frequency reference	Hz	
V1.3	Motor speed	rpm	Calculated motor speed
V1.4	Motor current	A	Measured motor current
V1.5	Motor torque	%	Calculated motor shaft torque
V1.6	Motor power	%	Calculated motor shaft power
V1.7	Motor voltage	V	Calculated motor voltage
V1.8	DC-link voltage	V	Measured DC-link voltage
V1.9	Unit temperature	ºC	Heat sink temperature
V1.10	Motor temperature	%	Calculated motor temperature. See VACON® NX All in One application manual.
V1.11	Voltage input	V	AI1
V1.12	Current input	mA	AI2
V1.13	DIN1, DIN2, DIN3		Digital input statuses
V1.14	DIN4, DIN5, DIN6		Digital input statuses
V1.15	DO1, RO1, RO2		Digital and relay output statuses
V1.16	Analogue output current	mA	AO1
V1.17	Multimonitoring items		Displays three selectable monitoring values. See Chapter 7.3.6.5.

NOTE! The All in One applications embody more monitoring values.

7.3.2 PARAMETER MENU (M2)

Parameters are the way of conveying the commands of the user to the AC drive. The parameter values can be edited by entering the Parameter Menu from the Main Menu when the location indication M2 is visible on the first line of the display. The value editing procedure is presented in Figure 82.

Push the Menu button right once to move into the Parameter Group Menu (G#). Locate the parameter group desired by using the Browser buttons and push the Menu button right again to enter the group and its parameters. Use again the Browser buttons to find the parameter (P#) you want to edit. From here you can proceed in two different ways: Pushing the Menu button right takes you to the edit mode. As a sign of this, the parameter value starts to blink. You can now change the value in two different manners:

1. Just set the new desired value with the Browser buttons and confirm the change with the Enter button. Consequently, the blinking stops and the new value is visible in the value field.
2. Push the Menu button right once again. Now you will be able to edit the value digit by digit. This editing manner may come in handy, when a relatively greater or smaller value than that on the display is desired. Confirm the change with the Enter button.

The value will not change unless the Enter button is pushed. Pressing the Menu button left takes you back to the previous menu.

Several parameters are locked, i.e. uneditable, when the drive is in RUN status. If you try to change the value of such a parameter the text *Locked* will appear on the display. The AC drive must be stopped in order to edit these parameters.

The parameters values can also be locked using the function in menu M6 (see Chapter Parameter lock (P6.5.2)).

You can return to the Main menu anytime by pressing the Menu button left for 3 seconds.

The basic application package "All in One+" includes seven applications with different sets of parameters.

Once in the last parameter of a parameter group, you can move directly to the first parameter of that group by pushing the Browser button up.

See the diagram for parameter value change procedure on page 136.

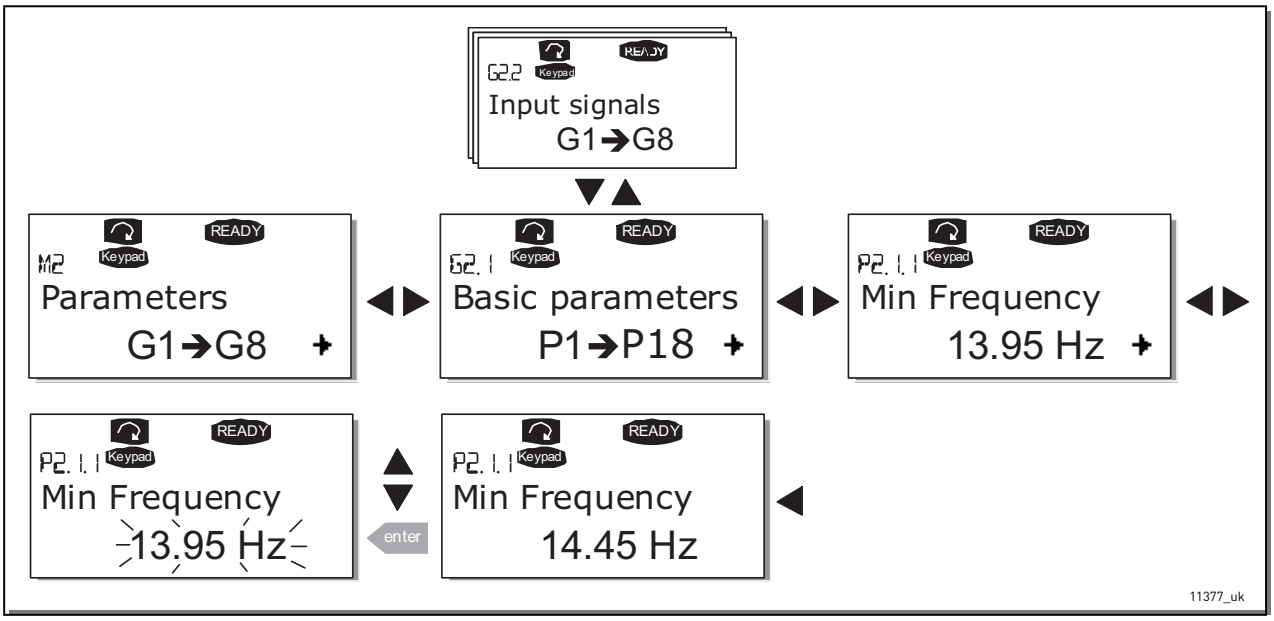

Figure 82. Parameter value change procedure

7.3.3 KEYPAD CONTROL MENU (M3)

In the Keypad Controls Menu, you can choose the control place, edit the frequency reference and change the direction of the motor. Enter the submenu level with the Menu button right.

Table 51. Keypad control parameters, M3

Code	Parameter	Min	Max	Unit	Default	Cust	ID	Note
P3.1	Control place	1	3		1		125	**1** = I/O terminal **2** = Keypad **3** = Fieldbus
R3.2	Keypad reference	Par. 2.1.1	Par. 2.1.2	Hz				
P3.3	Direction (on keypad)	0	1		0		123	**0** = Forward **1** = Reverse
R3.4	Stop button	0	1		1		114	**0** = Limited function of Stop button **1** = Stop button always enabled

7.3.3.1 Selection of control place

There are three different places (sources) which the AC drive can be controlled from. For each control place, a different symbol will appear on the alphanumeric display:

Control place	symbol
I/O terminals	I/O term
Keypad (panel)	Keypad
Fieldbus	Bus/Comm

Change the control place by entering the edit mode with the Menu button right. The options can then be browsed through with the Browser buttons. Select the desired control place with the Enter button. See the diagram on the next page.

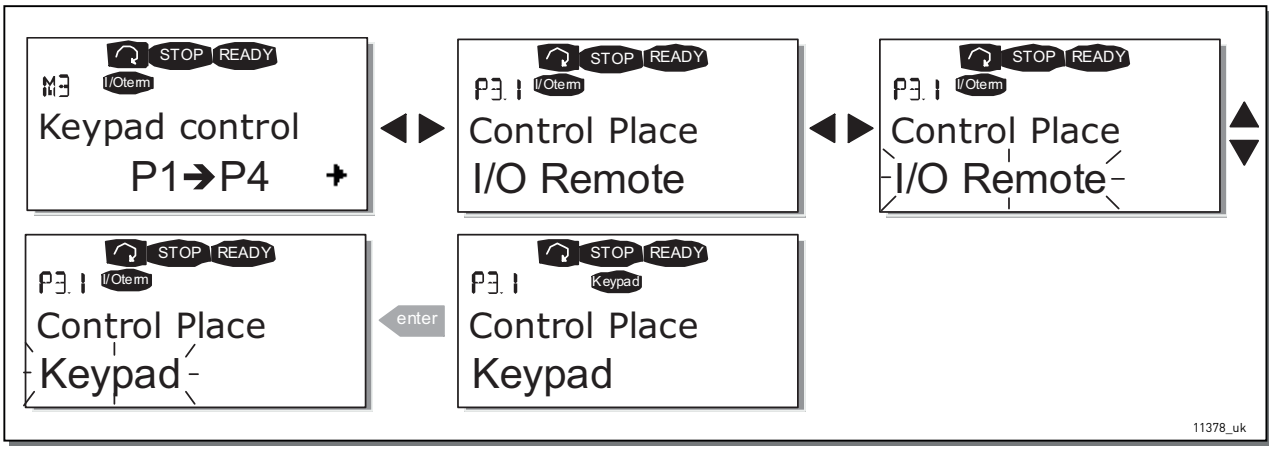

Figure 83. Selection of control place

7.3.3.2 Keypad reference

The keypad reference submenu (P3.2) displays and allows the operator to edit the frequency reference. The changes will take place immediately. This reference value will not, however, influence the rotation speed of the motor unless the keypad has been selected as source of reference.

NOTE! The maximum difference in RUN mode between the output frequency and the keypad reference is 6 Hz. See also Chapter 7.3.3.4 below.

See Figure 82 for how to edit the reference value (pressing the Enter button is not, however, necessary).

7.3.3.3 Keypad direction

The keypad direction submenu displays and allows the operator to change the rotating direction of the motor. This setting will not, however, influence the rotation direction of the motor unless the keypad has been selected as the active control place.

See also Chapter 7.3.3.4 below.

See Figure 83 for how to change the rotation direction.

NOTE! Additional Information on controlling the motor with the keypad is given in Chapter 7.2.1 and Chapter 8.2.

7.3.3.4 Stop button activated

By default, pushing the STOP button will always stop the motor regardless of the selected control place. You can disable this function by giving parameter 3.4 the value 0. If the value of this parameter is 0, the STOP button will stop the motor only when the keypad has been selected as the active control place.

NOTE! There are some special functions that can be performed when in the M3 menu:

Select the keypad as the active control place by keeping the Start button pushed down for 3 seconds when the motor is running. The keypad will become the active control place and the current frequency reference and direction will be copied to the keypad.

Select the keypad as the active control place by keeping the Stop button pushed down for 3 seconds when the motor is stopped. The keypad will become the active control place and the current frequency reference and direction will be copied to the keypad.

Copy the frequency reference set elsewhere (I/O, fieldbus) to the panel by keeping the

enter pushed down for 3 seconds.

Note that if you are in any other than M3 menu these functions will not work.

If you are in some other than M3 menu and try to start the motor by pressing the START button when the keypad is not selected as the active control place you will get an error message Keypad Control NOT ACTIVE.

7.3.4 ACTIVE FAULTS MENU (M4)

The Active faults menu can be entered from the Main menu by pushing the Menu button right when the location indication M4 is visible on the first line of the keypad display.

When a fault brings the AC drive to a stop, the location indication F1, the fault code, a short description of the fault and the fault type symbol (see Chapter 7.3.4.1) will appear on the display. In addition, the indication FAULT or ALARM (see Figure 78 or Chapter 7.1.1) is displayed and, in case of a FAULT, the red led on the keypad starts to blink. If several faults occur simultaneously, the list of active faults can be browsed with the Browser buttons.

The memory of active faults can store the maximum of 10 faults in the order of appearance. The display can be cleared with the Reset button and the read-out will return to the same state it was before the fault trip. The fault remains active until it is cleared with the Reset button or with a reset signal from the I/O terminal or fieldbus.

NOTE! Remove external Start signal before resetting the fault to prevent unintentional restart of the drive.

Normal state, no faults:



11379_uk

7.3.4.1 Fault types

In the VACON® NX AC drive, there are four different types of faults. These types differ from each other on the basis of the subsequent behaviour of the drive. See Table 52.

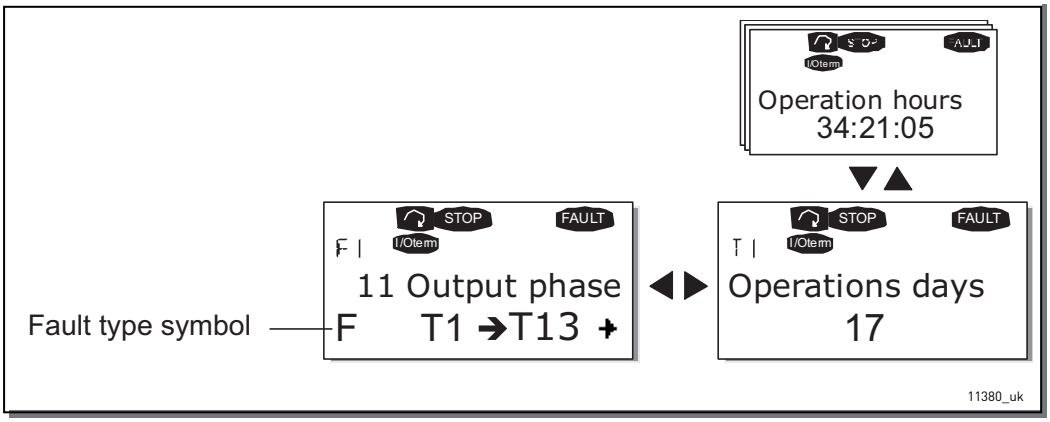

Figure 84. Fault display

Table 52. Fault types

Fault type symbol	Meaning
A (Alarm)	This type of fault is a sign of an unusual operating condition. It does not cause the drive to stop, nor does it require any special actions. The 'A fault' remains in the display for about 30 seconds.
F (Fault)	An 'F fault' is a kind of fault that makes the drive stop. Actions need to be taken in order to restart the drive.
AR (Fault Autoreset)	If an 'AR fault' occurs the drive will also stop immediately. The fault is reset automatically and the drive tries to restart the motor. Finally, if the restart is not successful, a fault trip (FT, see below) occurs.
FT (Fault Trip)	If the drive is unable to restart the motor after an AR fault an FT fault occurs. The effect of the 'FT fault' is basically the same as that of the F fault: the drive is stopped.

7.3.4.2 Fault codes

The fault codes, their causes and correcting actions are presented in Table 61. The shadowed faults are A faults only. The items written in white on black background present faults for which you can program different responses in the application. See parameter group Protections.

NOTE! When contacting distributor or factory because of a fault condition, always write down all texts and codes on the keypad display.

7.3.4.3 Fault time data record

When a fault occurs the information described above in Chapter 7.3.4.1 is displayed. By pushing the Menu button right here you will enter the Fault time data record menu indicated by T.1→T.13. In this menu, some selected important data valid at the time of the fault are recorded. This feature is intended to help the user or the service person to determine the cause of fault.

The data available are:

Table 53. Fault time recorded data

T.1	Counted operation days (Fault 43: Additional code)	d
T.2	Counted operation hours (Fault 43: Counted operation days)	hh:mm:ss (d)
T.3	Output frequency (Fault 43: Counted operation hours)	Hz (hh:mm:ss)
T.4	Motor current	A
T.5	Motor voltage	V
T.6	Motor power	%
T.7	Motor torque	%
T.8	DC voltage	V
T.9	Unit temperature	°C
T.10	Run status	
T.11	Direction	
T.12	Warnings	
T.13	0-speed*	
* Tells the user if the drive was at zero speed (< 0.01 Hz) when the fault occurred		

Real time record

If real time is set to run on the AC drive the data items T1 and T2 will appear as follows:

T.1	Counted operation days	yyyy-mm-dd
T.2	Counted operation hours	hh:mm:ss,sss

7.3.5 FAULT HISTORY MENU (M5)

The Fault history menu can be entered from the Main menu by pushing the Menu button right when the location indication M5 is visible on the first line of the keypad display. Find the fault codes in Table 61.

All faults are stored in the Fault history menu in which you can browse through them using the Browser buttons. Additionally, the Fault time data record pages are accessible at each fault. You can return to the previous menu anytime by pushing the Menu button left.

The memory of the AC drive can store a maximum of 30 faults in the order of appearance. The number of faults currently in the fault history is shown on the value line of the main page (H1→H#).

The order of the faults is indicated by the location indication in the upper left corner of the display. The latest fault carries the indication F5.1, the second latest F5.2 etc. If there are 30 uncleared faults in the memory the next occurring fault will erase the oldest from the memory.

Pressing the Enter button for about 2 to 3 seconds resets the whole fault history. Then, the symbol H# will change to 0.

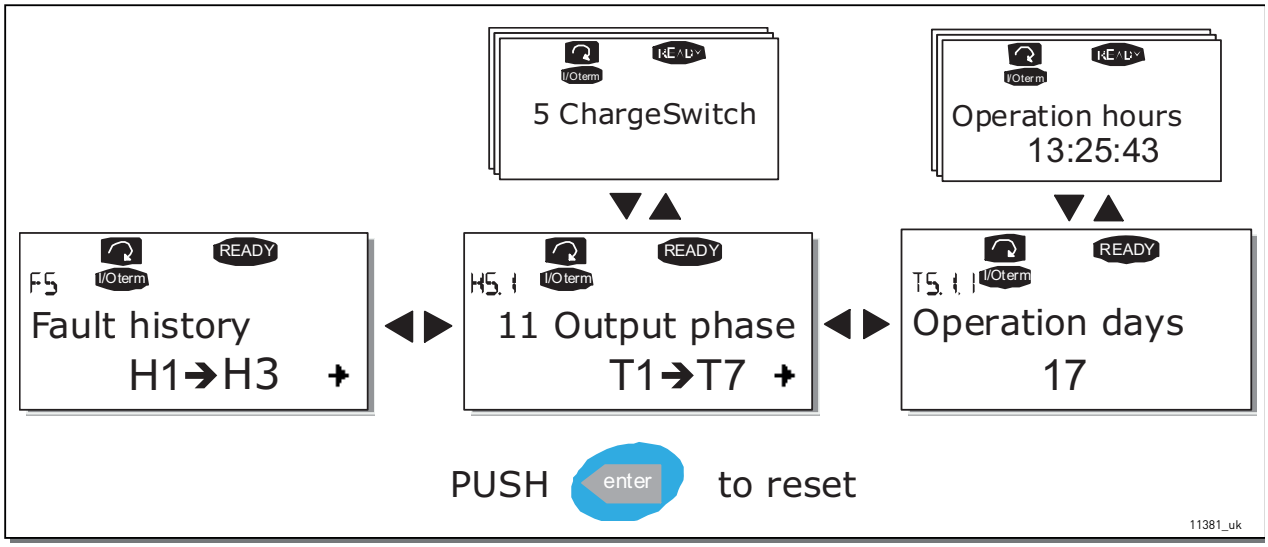

Figure 85. Fault history menu

7.3.6 SYSTEM MENU (M6)

The System menu can be entered from the main menu by pushing the Menu button right when the location indication M6 is visible on the display.

The controls associated with the general use of the AC drive, such as application selection, customised parameter sets or information about the hardware and software are located under the System menu. The number of submenus and subpages is shown with the symbol S (or P) on the value line.

On page 142 you will find a list of the functions available in the System menu.

Functions in the System menu

Table 54. System menu functions

Code	Function	Min	Max	Unit	Default	Cust	Selections
S6.1	Language selection				English		Available selections depend on the language package.
S6.2	Application selection				Basic Applica-tion		Basic Application Standard Application Local/Remote control Appl. Multi-Step Application PID Control Application Multi-Purpose Control Appl. Pump and Fan Control Appl.
S6.3	Copy parameters						
S6.3.1	Parameter sets						Store set 1 Load set 1 Store set 2 Load set 2 Load factory defaults
S6.3.2	Load up to keypad						All parameters
S6.3.3	Load down from keypad						All parameters All but motor parameters Application parameters
P6.3.4	Parameter backup				Yes		Yes No
S6.4	Compare parameters						
S6.4.1	Set1				Not used		
S6.4.2	Set2				Not used		
S6.4.3	Factory settings						
S6.4.4	Keypad set						
S6.5	Security						
S6.5.1	Password				Not used		0 = Not used
P6.5.2	Parameter lock				Change Enabled		Change Enabled Change Disabled
S6.5.3	Start-up wizard						No Yes
S6.5.4	Multimonitoring items						Change Enabled Change Disabled
S6.6	Keypad settings						
P6.6.1	Default page						
P6.6.2	Default page/ Operating menu						
P6.6.3	Timeout time	0	65535	s	30		
P6.6.4	Contrast	0	31		18		
P6.6.5	Backlight time	Always	65535	min	10		
S6.7	Hardware settings						
P6.7.3	HMI acknowledg. timeout		200			5000	
P6.7.4	HMI number of retries		1			10	
S6.8	System information						

Table 54. System menu functions

Code	Function	Min	Max	Unit	Default	Cust	Selections
S6.8.1	Total counters						
C6.8.1.1	MWh counter						
C6.8.1.2	Power On day counter						
C6.8.1.3	Power On hours counter						
S6.8.2	Trip counters						
T6.8.2.1	MWh counter			kWh			
T6.8.2.2	Clear MWh trip counter						
T6.8.2.3	Operating days trip counter						
T6.8.2.4	Operating hours trip counter			hh:mm:ss			
T6.8.2.5	Clear operating time counter						
S6.8.3	Software info						
S6.8.3.1	Software package						
S6.8.3.2	System software version						
S6.8.3.3	Firmware interface						
S6.8.3.4	System load						
S6.8.4	Applications						
S6.8.4.#	Name of application						
D6.8.4.#.1	Application ID						
D6.8.4.#.2	Applications: Version						
D6.8.4.#.3	Applications: Firmware interface						
S6.8.5	Hardware						
I6.8.5.1	Info: Power unit type code						
I6.8.5.2	Info: Unit voltage			V			
I6.8.5.3	Info: Brake chopper						
I6.8.5.4	Info: Brake resistor						
S6.8.6	Expander boards						
S6.8.7	Debug menu						For Application programming only. Contact factory for more details.

7.3.6.1 Language selection

The VACON® control keypad offers you the possibility to control the AC drive through the keypad in the language of your choice.

Locate the language selection page under the System menu. Its location indication is S6.1. Press the Menu button right once to enter the edit mode. As the name of the language starts to blink you are able to choose another language for the keypad texts. Confirm the selection by pushing the Enter button. The blinking stops and all textual information on the keypad is presented in the language you chose.

You can return to the previous menu anytime by pushing the Menu button left.

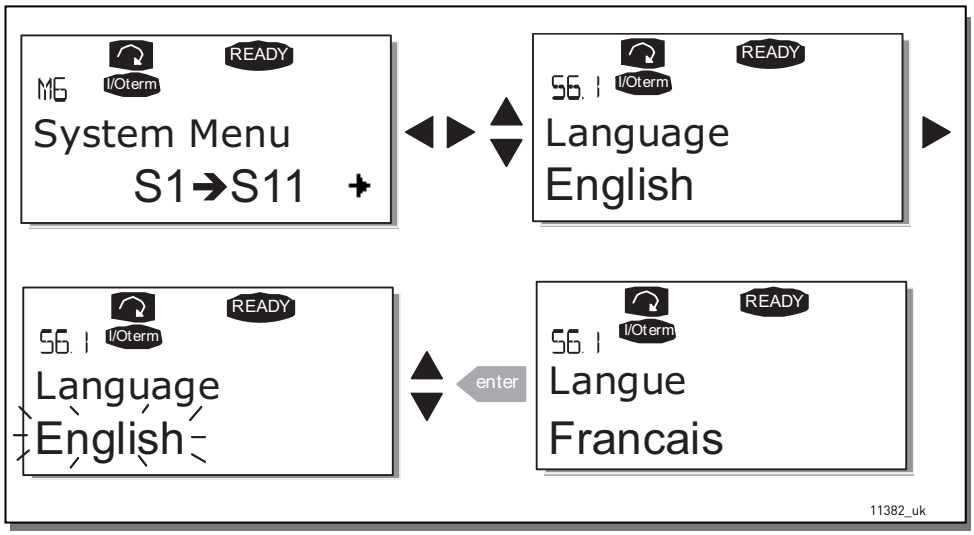

Figure 86. Selection of language

7.3.6.2 Application selection

The user can select the application desired by entering the Application selection page (S6.2). This is done by pushing the Menu button right when on the first page of the System menu. Change then the application by pushing the Menu button right once again. The name of the application starts to blink. Now you can browse through the applications with the Browser buttons and select another application with the Enter button.

Changing application will reset all parameters. After application change, you will be asked if you want the parameters of the new application to be uploaded to the keypad. If you wish this to happen push the Enter button Pushing any other button leaves the parameters of the previously used application saved in the keypad. For more information, see Chapter 7.3.6.3.

For more information about the Application Package, see VACON® NX All-in-One Application Manual.

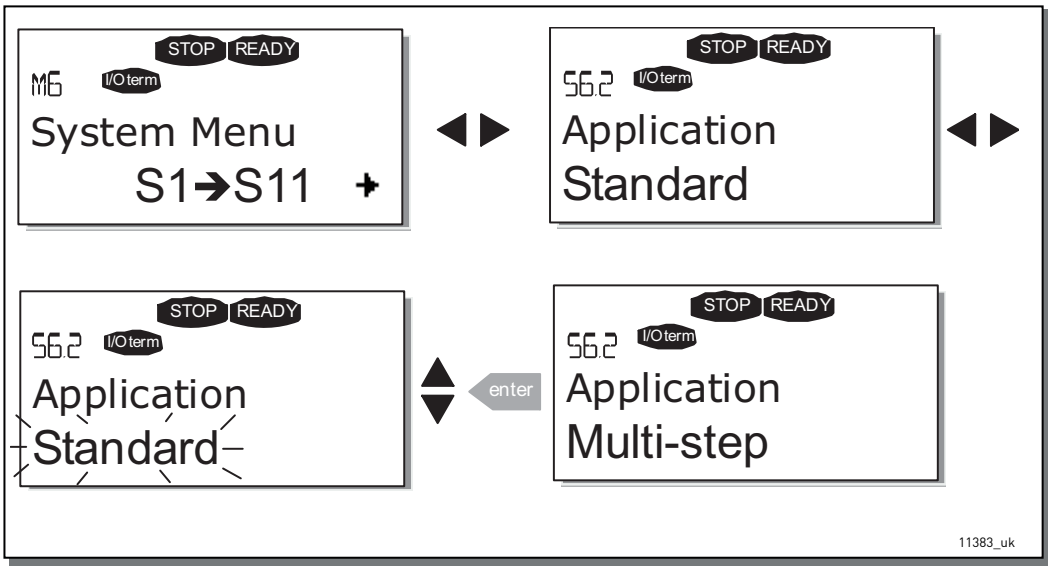

Figure 87. Change of application

7.3.6.3 Copy parameters

The parameter copy function is used when the operator wants to copy one or all parameter groups from one drive to another or to store parameter sets in the internal memory of the AC drive. All the parameter groups are first uploaded to the keypad, then the keypad is connected to another drive and then the parameter groups are downloaded to it (or possibly back to the same drive).

Before any parameters can successfully be copied from one drive to another the drive has to be stopped when the parameters are downloaded to it:

The parameter copy menu (S6.3) embodies four functions:

Parameter sets (S6.3.1)

The VACON® NX AC drive features a possibility for the user to load back the factory default parameter values and to store and load two customised parameter sets (all parameters included in the application).

On Parameter sets page (S6.3.1), push the Menu button right to enter the Edit menu. The text LoadFactDef begins to blink and you can confirm the loading of factory defaults by pushing the Enter button. The drive resets automatically.

Alternatively you can choose any other of the storing or loading functions with the Browser buttons. Confirm with the Enter button. Wait until 'OK' appears on the display.

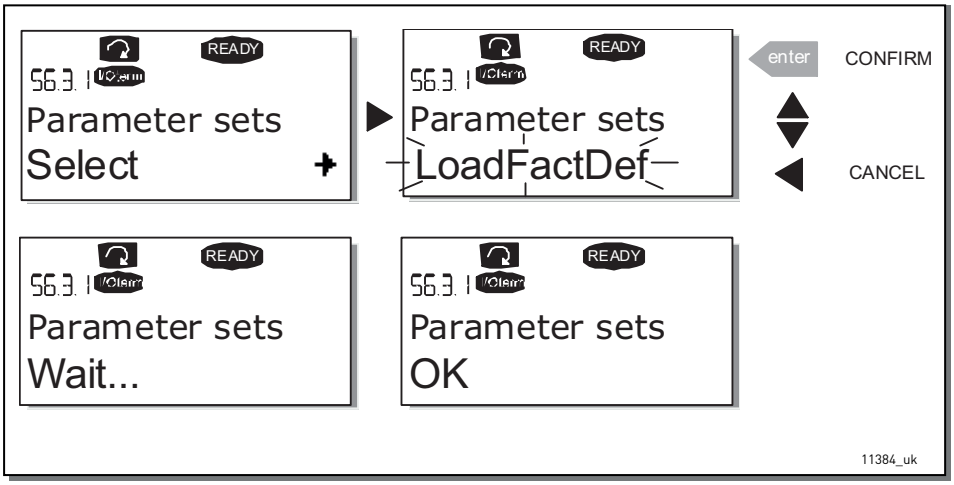

Figure 88. Storing and loading of parameter sets

Upload parameters to keypad (To keypad, S6.3.2)

This function uploads all existing parameter groups to the keypad provided that the drive is stopped.

Enter the To keypad page (S6.3.2) from the Parameter copy menu. Push the Menu button right to enter the edit mode. Use the Browser buttons to select the option All parameters and press the Enter button. Wait until 'OK' appears on the display.

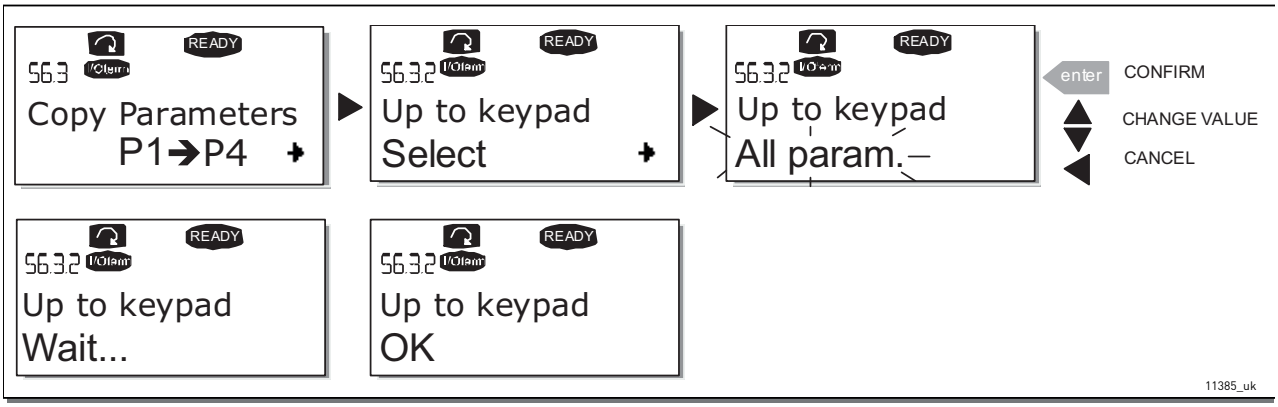

Figure 89. Parameter copy to keypad

Download parameters to drive (From keypad, S6.3.3)

This function downloads one or all parameter groups uploaded to the keypad to a drive provided that the drive is in STOP status.

Enter the From keypad page (S6.3.3) from the Parameter copy menu. Push the Menu button right to enter the edit mode. Use the Browser buttons to select either the option All parameters or Application parameters and press the Enter button. Wait until 'OK' appears on the display.

The procedure to download the parameters from keypad to drive is similar to that of from drive to keypad. See above.

Automatic parameter backup (P6.3.4)

On this page you can activate or inactivate the parameter backup function. Enter the edit mode by pressing the Menu button right. Choose Yes or No with the Browser buttons.

When the Parameter backup function is activated VACON® NX control keypad makes a copy of the parameters of the presently used application. Every time a parameter is changed the keypad backup is automatically updated.

When applications are changed, you will be asked if you wish the parameters of the new application to be uploaded to the keypad. For this to happen, push the Enter button. If you wish to keep the copy of the parameters of the previously used application saved in the keypad push any other button. Now you will be able to download these parameters to the drive following the instructions given in Chapter 7.3.6.3.

If you want the parameters of the new application to be automatically uploaded to the keypad you have to do this for the parameters of the new application once on page 6.3.2 as instructed. Otherwise the panel will always ask for the permission to upload the parameters.

NOTE! Parameters saved in the parameter settings on page S6.3.1 will be deleted when applications are changed. If you want to transfer the parameters from one application to another you have to upload them first to the keypad.

7.3.6.4 Parameter comparison

In the Parameter comparison submenu (S6.4), you can compare the actual parameter values to the values of your customised parameter sets and those loaded to the control keypad.

The comparison is performed by pushing the Menu button right when in the Compare parameters submenu. The actual parameter values are first compared to those of the customised parameter Set1. If no differences are detected a '0' is displayed on the lowermost line. But if any of the parameter values differ from those of the Set1 the number of the deviations is displayed together with symbol P (e.g. P1→P5 = five deviating values). By pressing the Menu button right once again

you can still enter the pages where you can see both the actual value and the value it was compared to. In this display, the value on the Description line (in the middle) is the default value and the one on the value line (lowermost) is the edited value. Furthermore, you can also edit the actual value with the Browser buttons in the edit mode that you can reach by pushing the Menu button right once again.

In the same way, you can perform the comparison of the actual values to Set2, Factory Settings and Keypad Set.

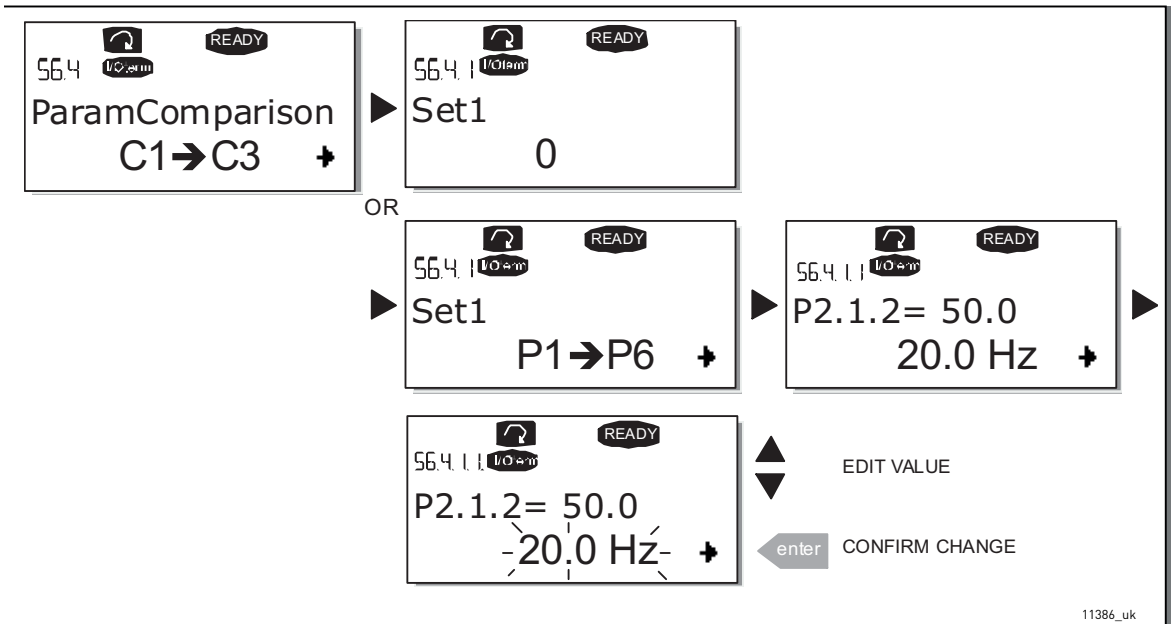

Figure 90. Parameter comparison

7.3.6.5 Security

NOTE! The Security submenu is protected with a password. Store the password in a safe place!

Password (S6.5.1)

The application selection can be protected against unauthorised changes with the Password function (S6.5.1).

By default, the password function is not in use. If you want to activate the function, enter the edit mode by pushing the Menu button right. A blinking zero appears in the display and now you can set a password with the Browser buttons. The password can be any number between 1 and 65535.

NOTE! that you can also set the password by digits. In the edit mode, push the Menu button right once again and another zero appears on the display. Now set first the units. Then push the Menu button left and you can set the tens etc. Finally, confirm the password setting with the Enter button. After this, you have to wait until the Timeout time (P6.6.3) (see page 150) has expired before the password function is activated.

If you now try to change applications or the password itself you will be prompted for the current password. The password will be entered with the Browser buttons.

Deactivate the password function by entering the value **0**.

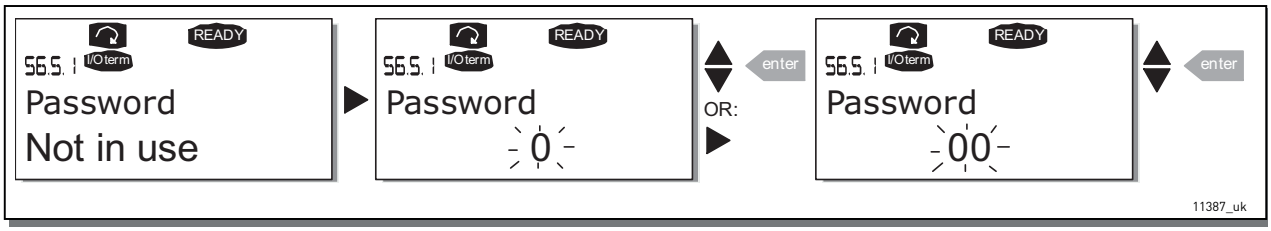

Figure 91. Password setting

NOTE! Store the password in a secure location! No changes can be made unless a valid password is entered!

Parameter lock (P6.5.2)

This function allows the user to prohibit changes to the parameters.

If the parameter lock is activated the text *locked* will appear on the display if you try to edit a parameter value.

NOTE! This function does not prevent unauthorised editing of parameter values.

Enter the edit mode by pushing the Menu button right. Use the Browser buttons to change the parameter lock status. Accept the change with the Enter button or return to the previous level with the Menu button left.

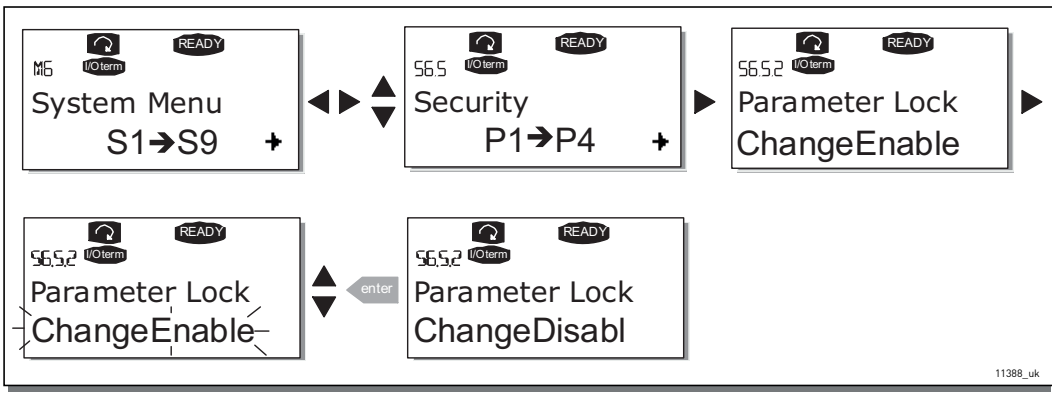

Figure 92. Parameter locking

Start-up Wizard (P6.5.3)

The Start-up Wizard is a feature on the control keypad to facilitate the commissioning of the AC drive. If selected active (default), the Start-up Wizard prompts the operator for the language and application of his/her choice plus for the values for a set of parameters common to all applications as well as for a set of application-dependent parameters.

Always accept the value with the Enter button, scroll options or change values with the Browser buttons (up and down arrows).

Set the Start-up Wizard active in the following way: In the System Menu, find page P6.5.3. Press the Menu button right once to reach the edit mode. Use the Browser buttons to set value Yes and confirm the selection with the Enter button. If you want to deactivate the function follow the same procedure and give the parameter value No.



Figure 93. Activation of Start-up wizard

Multimonitoring items (P6.5.4)

VACON® alpha-numeric keypad features a display where you can monitor even three actual values at the same time (see Chapter 7.3.1 and Chapter Monitoring values in the manual of the application you are using). On page P6.5.4 of the System Menu you can define if it is possible for the operator to replace the values monitored with other values. See below.

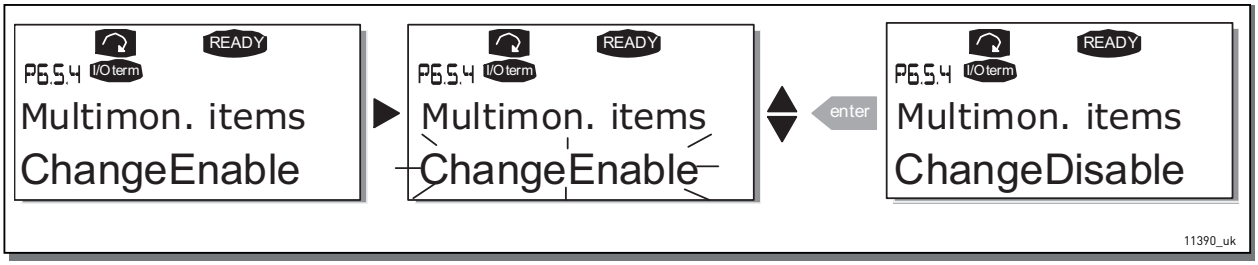

Figure 94. Enabling the change of multimonitoring items

7.3.6.6 Keypad settings

In the Keypad settings submenu under the System menu you can further customise your AC drive operator interface.

Locate the Keypad settings submenu (S6.6). Under the submenu, there are four pages (P#) associated with the keypad operation:

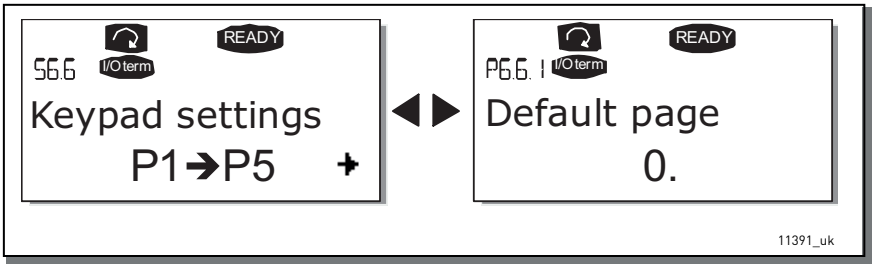

Figure 95. Keypad settings submenu

Default page (P6.6.1)

Here you can set the location (page) to which the display automatically moves as the Timeout time (see below) has expired or as the power is switched on to the keypad.

If the Default Page value is 0 the function is not activated, i.e. the last displayed page remains on the keypad display. Press the Menu button right once to enter the edit mode. Change the number of the Main menu with the Browser buttons. Pressing the Menu button right once again makes you able to edit the number of the submenu/page. If the page you want to move to by default is at the third level

repeat the procedure. Confirm the new default page value with the Enter button. You can return to the previous step anytime by pushing the Menu button left.

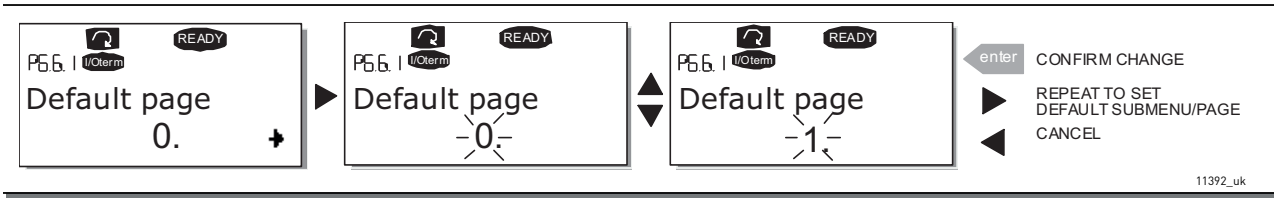

Figure 96. Default page function

Default page in the operating menu (P6.6.2)

Here you can set the location (page) in the Operating menu (in special applications only) to which the display automatically moves as the set Timeout time (see below) has expired or as the power is switched on to the keypad. See setting of Default page above.

Timeout time (P6.6.3)

The Timeout time setting defines the time after which the keypad display returns to the Default page (P6.6.1) see above.

Move to the Edit menu by pressing the Menu button right. Set the timeout time you want and confirm the change with the Enter button. You can return to the previous step anytime by pushing the Menu button left.

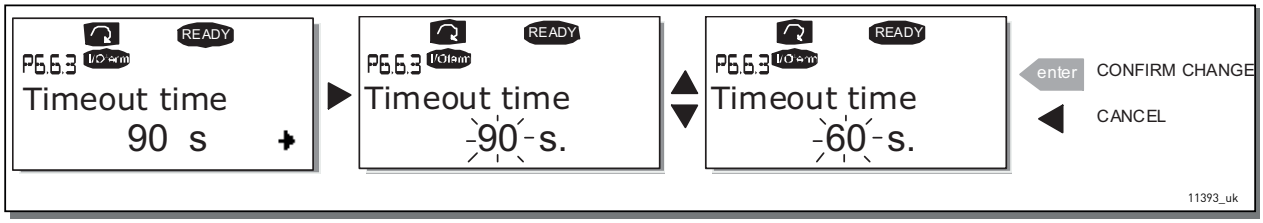

Figure 97. Timeout time setting

NOTE! If the Default page value is 0 the Timeout time setting has no effect.

Contrast adjustment (P6.6.4)

In case the display is unclear you can adjust its contrast through the same procedure as that for the timeout time setting (see above).

Backlight time (P6.6.5)

Giving a value for the Backlight time, you can determine how long the backlight stays on before going out. You can select here any time between 1 and 65535 minutes or 'Forever'. For the value setting procedure see Timeout time (P6.6.3).

7.3.6.7 Hardware settings

NOTE! The Hardware settings submenu is protected with a password (see Chapter Password (S6.5.1)). Store the password in a safe place!

In the Hardware settings submenu (S6.7) under the System menu you can further control some functions of the hardware in your AC drive. The functions available in this menu are HMI acknowledge timeout and HMI retry.

HMI acknowledge timeout (P6.7.3)

This function allows the user to change the timeout of the HMI acknowledgement time in cases where there is an additional delay in the RS-232 transmission due to use of modems for communication over longer distances, for example.

NOTE! If the AC drive has been connected to the PC with a normal cable, the default values of parametres 6.7.3 and 6.7.4 (200 and 5) must not be changed.

If the AC drive has been connected to the PC via a modem and there is delay in transferring messages, the value of par. 6.7.3 must be set according to the delay as follows:

Example:

- Transfer delay between the AC drive and the PC = 600 ms
- The value of par. 6.7.3 is set to 1200 ms (2 x 600, sending delay + receiving delay)
- The corresponding setting must be entered in the [Misc]-part of the file NCDrive.ini:

  Retries = 5

  AckTimeOut = 1200

  TimeOut = 6000

It must also be considered that intervals shorter than the AckTimeOut-time cannot be used in NC-Drive monitoring.

Enter the edit mode by pushing the Menu button right. Use the Browser buttons to change the acknowledgement time. Accept the change with the Enter button or return to the previous level with the Menu button left.

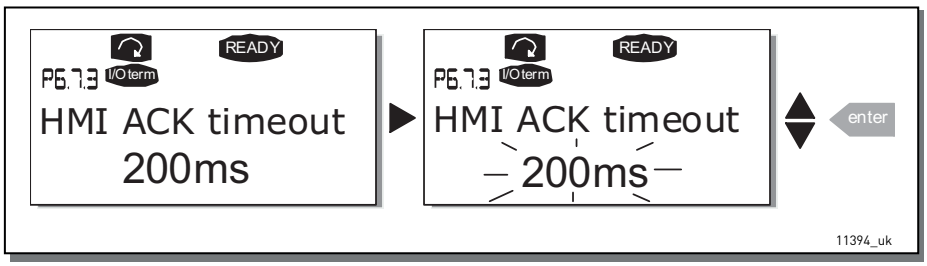

Figure 98. HMI acknowledge timeout

Number of retries to receive HMI acknowledgement (P6.7.4)

With this parameter you can set the number of times the drive will try receive acknowledgement if this does not succeed within the acknowledgement time (P6.7.3) or if the received acknowledgement is faulty.

Enter the edit mode by pushing the Menu button right. The present value shown starts to blink. Use the Browser buttons to change the amount of retries. Accept the change with the Enter button or return to the previous level with the Menu button left.

See Figure 98 for the procedure of changing the value.

7.3.6.8 System info

In the System info submenu (S6.8) you can find AC drive-related hardware and software information as well as operation-related information.

Total counters (S6.8.1)

In the Total counters page (S6.8.1) you can find information related to the AC drive operation times, i.e. the total numbers of MWh, operation days and operation hours passed so far. Unlike the counters in the Trip counters, these counters cannot be reset.

NOTE! The Power On time counter (days and hours) runs always, when the power is on.

Table 55. Counter pages

Page	Counter	Example
C6.8.1.1.	MWh counter	
C6.8.1.2.	Power On day counter	Value on display is 1.013. The drive has operated for 1 year and 13 days.
C6.8.1.3.	Power On hour counter	Value on display is 7:05:16. The drive has operated for 7 hours 5 minutes and 16 seconds.

Trip counters (S6.8.)

Trip counters (menu S6.8.2) are counters the values of which can be reset i.e. restored to zero. You have the following resettable counters at your disposal. See Table 55 for examples.

NOTE! The trip counters run only when the motor is running.

Table 56. Resettable counters

Page	Counter
T6.8.2.1	MWh counter
T6.8.2.3	Operation day counter
T6.8.2.4	Operation hour counter

The counters can be reset on pages 6.8.2.2 (Clear MWh counter) and 6.8.2.5 (Clear Operation time counter).

Example: When you want to reset the operation counters you should do the following:

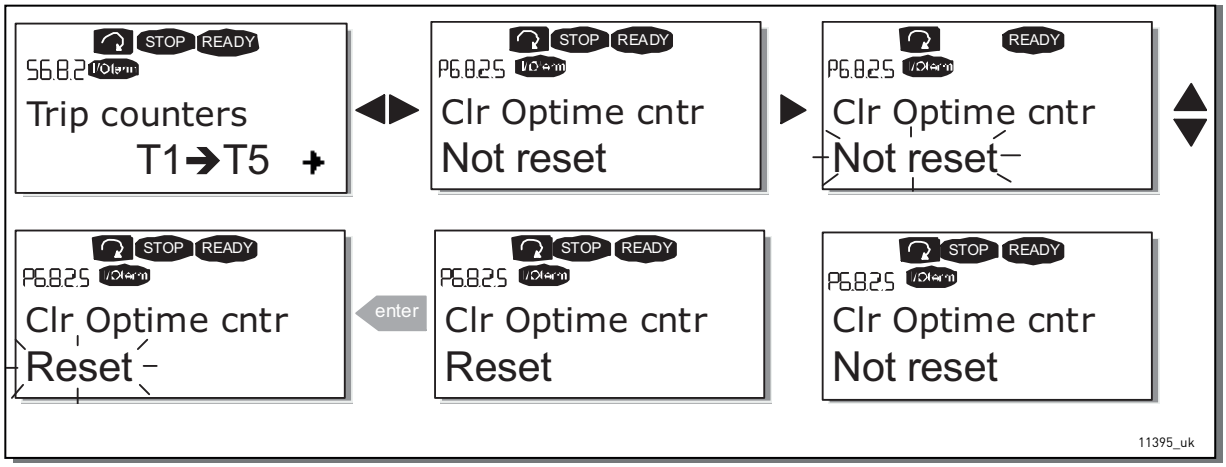

Figure 99. Counter reset

Software (S6.8.3)

The Software information page includes information on the following AC drive software related topics:

Table 57. Software information pages

Page	Content
6.8.3.1	Software package
6.8.3.2	System software version
6.8.3.3	Firmware interface
6.8.3.4	System load

Applications (S6.8.4)

At location S6.8.4 you can find the Applications submenu containing information about not only the application currently in use but also all other applications loaded into the AC drive. The information available is:

Table 58. Applications information pages

Page	Content
6.8.4.#	Name of application
6.8.4.#.1	Application ID
6.8.4.#.2	Version
6.8.4.#.3	Firmware interface

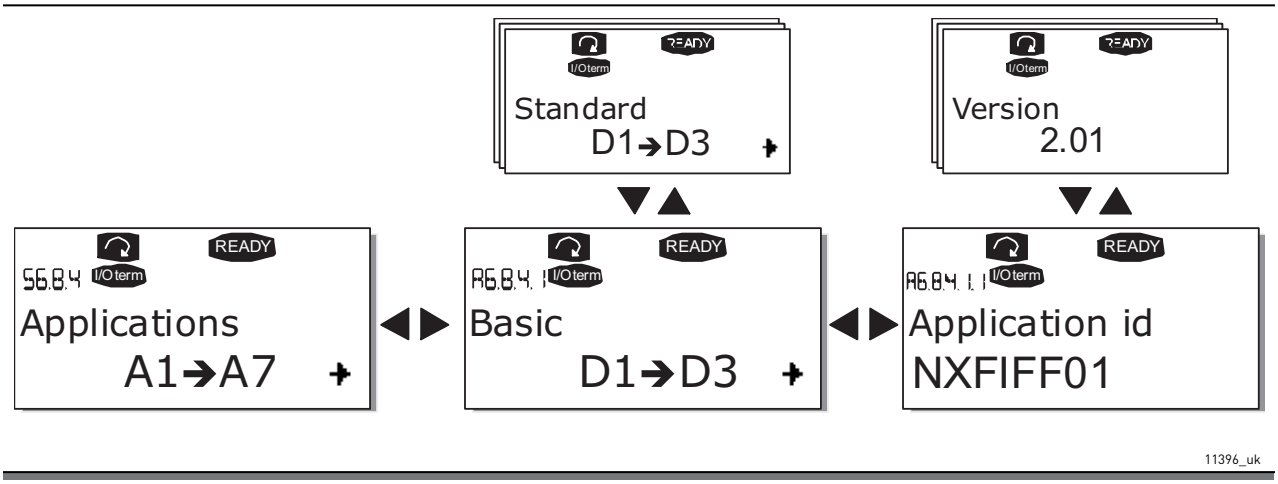

Figure 100. Applications info page

In the Applications information page, push the Menu button right to enter the Application pages of which there are as many as there are applications loaded into the AC drive. Locate the application you want information about with the Browser buttons and then enter the Information pages with the Menu button right. Use again the Browser buttons to see the different pages.

Hardware (S6.8.5)

The Hardware information page provides information on the following hardware-related topics:

Table 59. Hardware information pages

Page	Content
6.8.5.1	Power unit type code
6.8.5.2	Nominal voltage of the unit
6.8.5.3	Brake chopper
6.8.5.4	Brake resistor

Expander boards (S6.8.6)

In the Expander boards pages you find information about the basic and option boards connected to the control board (see Chapter 6.1.3).

You can check the status of each board slot by entering the Expander boards page with the Menu button right and using the Browser buttons to choose the board whose status you wish to check. Push the Menu button right again to display the status of the board. The keypad will also display the program version of the respective board when you push either one of the Browser buttons.

If no board is connected to the slot the text 'no board' will be shown. If a board is connected to a slot but the connection is somehow lost the text 'no conn.' is displayed. See Chapter 6.2 and Figure 58 and Figure 68 for more information.

For more information on the expander board-related parameters, see Chapter 7.3.7.

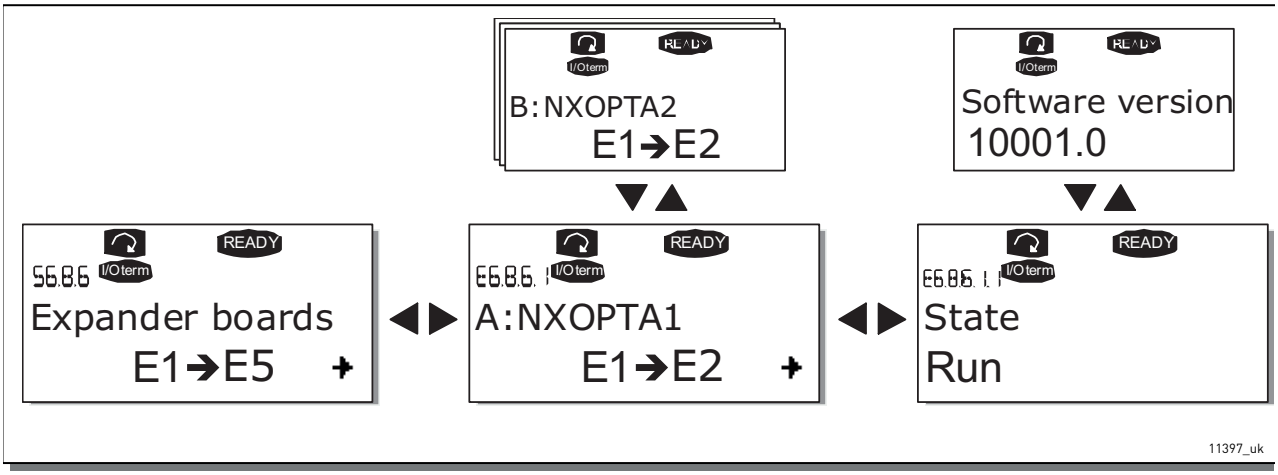

Figure 101. Expander board information menus

Debug menu (S6.8.7)

This menu is meant for advanced users and application designers. Contact factory for any assistance needed.

7.3.7 EXPANDER BOARD MENU (M7)

The Expander board menu makes it possible for the user 1) to see what expander boards are connected to the control board and 2) to reach and edit the parameters associated with the expander board.

Enter the following menu level (G#) with the Menu button right. At this level, you can browse through slots (see page 96) A to E with the Browser buttons to see what expander boards are connected. On the lowermost line of the display you also see the number of parameters associated with the board. You can view and edit the parameter values in the same way as described in Chapter 7.3.2. See Table 60 and Figure 102.

Expander board parameters

Table 60. Expander board parameters (board OPT-A1)

Code	Parameter	Min	Max	Default	Cust	Selections
P7.1.1.1	AI1 mode	1	5	3		**1** = 0...20 mA **2** = 4...20 mA **3** = 0...10 V **4** = 2...10 V **5** = –10...+10 V
P7.1.1.2	AI2 mode	1	5	1		See P7.1.1.1
P7.1.1.3	AO1 mode	1	4	1		**1** = 0...20 mA **2** = 4...20 mA **3** = 0...10 V **4** = 2...10 V

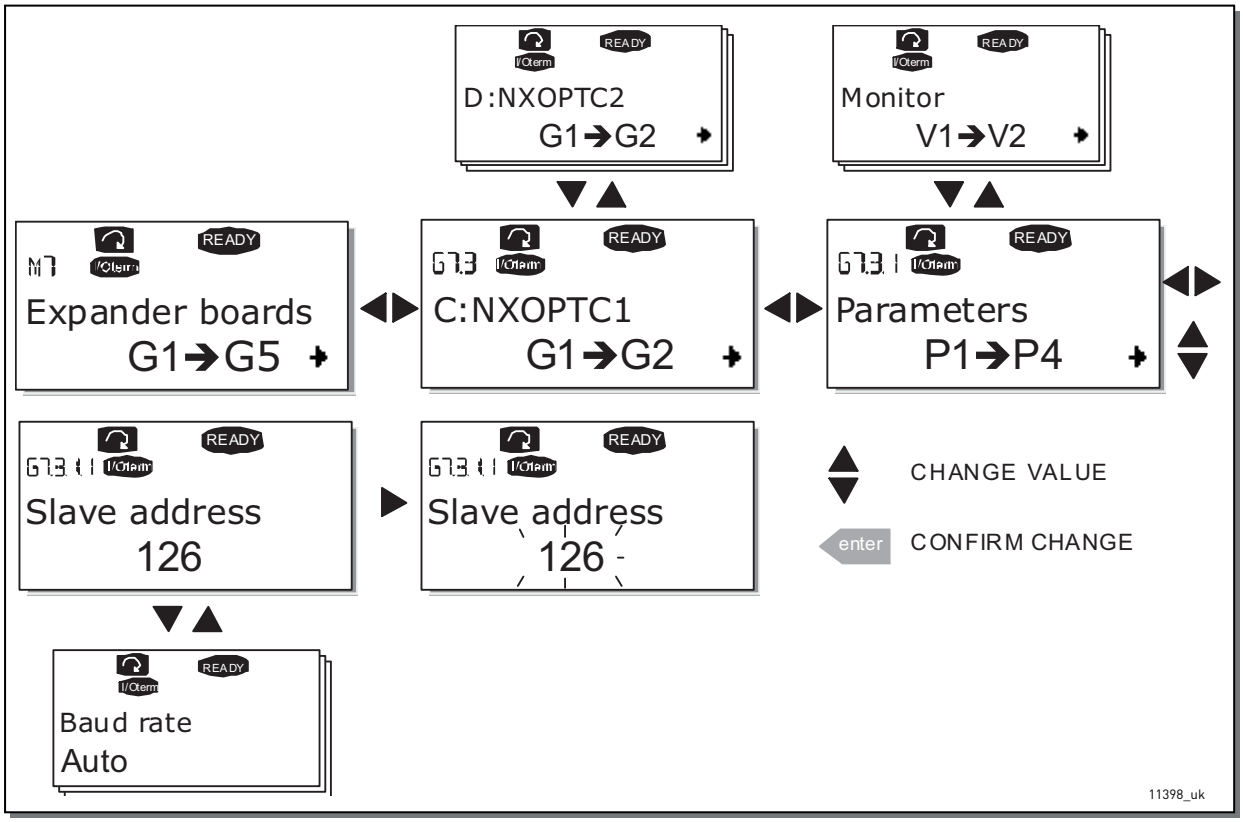

Figure 102. Expander board information menu

7.4 FURTHER KEYPAD FUNCTIONS

The VACON® NX control keypad embodies additional application-related functions. See VACON® NX Application Package for more information.

8. COMMISSIONING

8.1 SAFETY

Before commissioning, note the following directions and warnings:



Internal components and circuit boards of the AC drive are live when VACON® NX Liquid-cooled drive is connected to mains potential. Coming into contact with this voltage is extremely dangerous and may cause death or severe injury.



The motor terminals U, V, W and the DC-link/brake resistor terminals B–, B+/R+, R– are live when VACON® NX Liquid-cooled drive is connected to mains, even if the motor is not running.



The control I/O-terminals are isolated from the mains potential. However, the relay outputs and other I/O-terminals may have a dangerous control voltage present even when VACON® NX Liquid-cooled drive is disconnected from mains.



Do not make any connections with the AC drive connected to the mains.



After having disconnected the AC drive from the mains, wait until the indicators on the keypad go out (if no keypad is attached see the indicator through the keypad base). Wait 5 more minutes before doing any work on VACON® NX Liquid-cooled drive connections. Do not even open the cover before this time has expired.



Before connecting the NX Liquid-cooled drive to mains, ensure the functionality of the coolant circulation and check the circulation for possible leaks.



Before connecting the drive to mains make sure that the switchgear enclosure door is closed.

8.2 COMMISSIONING OF THE AC DRIVE

1. Read carefully the safety instructions in Chapter 1 and follow them.

2. After the installation, pay attention:

   - that both the AC drive and the motor are grounded.
   - that the mains and motor cables comply with the requirements given in Chapter 6.1.2.
   - that the control cables are located as far as possible from the power cables and that the shields of the shielded cables are connected to protective earth ⏚. The wires may not touch the electrical components of the AC drive.
   - that the common inputs of digital input groups are connected to +24 V or ground of the I/O terminal or the external supply.

3. Check liquid cooling connections and system operation.
   - open the shut-off valves
   - check the quality and quantity of the cooling liquid (Chapter 5.2)
   - ensure the proper operation of liquid circulation system

4. Perform the cable and motor insulation checks, see Chapter 6.1.11.

5. Check the AC drive for condensation.

6. Check that all Start/Stop switches connected to the I/O terminals are in Stop-position.

7. Connect the AC drive to mains.

8. Set the parameters of group 1 (See VACON® All-in-One Application Manual) according to the requirements of your application. At least the following parameters should be set:

   - motor nominal voltage
   - motor nominal frequency
   - motor nominal speed
   - motor nominal current

   You will find the values needed for the parameters on the motor rating plate.

9. Perform run test without motor

   Perform either Test A or Test B:

A Controls from the I/O terminals:

   a) Turn the Start/Stop switch to ON position.
   b) Change the frequency reference (potentiometer).
   c) Check in the Monitoring menu (M1) that the value of Output frequency changes according to the change of frequency reference.
   d) Turn the Start/Stop switch to OFF position.

B Control from the control keypad:

   a) Change the control from the I/O terminals to the keypad as advised in Chapter 7.3.3.1.

b) Push the Start button on the keypad.
c) Move over to the Keypad control menu (M3) and Keypad Reference submenu (Chapter 7.3.3.2) and change the frequency reference using the Browser buttons 
d) Check in the Monitoring menu (M1) that the value of Output frequency changes according to the change of frequency reference.
e) Push the Stop button on the keypad.

10. Run the start-up tests without the motor being connected to the process, if possible. If this is not possible, secure the safety of each test prior to running it. Inform your co-workers of the tests.

a) Switch off the supply voltage and wait until the drive has stopped as advised in Chapter 8.1, step 5.
b) Connect the motor cable to the motor and to the motor cable terminals of the AC drive.
c) See to that all Start/Stop switches are in Stop positions.
d) Switch the mains ON
e) Repeat test 9A or 9B.

11. Connect the motor to the process (if the startup test was run without the motor being connected).

a) Before running the tests, make sure that this can be done safely.
b) Inform your co-workers of the tests.
c) Repeat test 9A or 9B.

9. FAULT TRACING

9.1 FAULT CODES

When a fault is detected by the AC drive control electronics, the drive is stopped and the symbol F together with the ordinal number of the fault, the fault code and a short fault description appear on the display. The fault can be reset with the Reset button on the control keypad or via the I/O terminal. The faults are stored in the Fault history menu (M5) which can be browsed. The different fault codes you will find in the table below.

The fault codes, their causes and correcting actions are presented in the table below. The shadowed faults are A faults only. The faults written in white on black background may appear as both A and F fault.

Table 61. Fault codes

Fault code	Fault	Possible cause	Correcting measures
1	Overcurrent	AC drive has detected too high a current (> 4*IH) in the motor cable: - Sudden heavy load increase - Short circuit in motor cables - Unsuitable motor Subcode in T.14: S1 = Hardware trip S3 = Current controller supervision	Check loading. Check motor. Check cables.
2	Overvoltage	The DC-link voltage has exceeded the limits defined in Table 7. - Too short a deceleration time - High overvoltage spikes in supply Subcode in T.14: S1 = Hardware trip S2 = Overvoltage control supervision	Make the deceleration time longer. Use brake chopper or brake resistor (available for most chassis as options)
3	Earth fault	Current measurement has detected that the sum of motor phase current is not zero. - Insulation failure in cables or motor	Check motor cables and motor.
5	Charging switch	The charging switch is open, when the START command has been given. - Faulty operation - Component failure	Reset the fault and restart. Should the fault re-occur, contact your local distributor.
6	Emergency stop	Stop signal has been given from the option board.	Check emergency stop circuit.

Table 61. Fault codes

Fault code	Fault	Possible cause	Correcting measures
7	Saturation trip	Various causes: - Defective component - Brake resistor short-circuit or overload	Cannot be reset from the keypad. Switch off power. DO NOT RE-CONNECT POWER! Contact your local distributor. If this fault appears simultaneously with Fault 1, check motor cables and motor.
8	System fault	- Component failure - Faulty operation Note exceptional fault data record. Subcode in T.14: S1 = Feedback of motor voltage S2 = Reserved S3 = Reserved S4 = ASIC trip S5 = Disturbance in VaconBus S6 = Feedback of charging switch S7 = Charging switch S8 = No power to driver card S9 = Power unit communication (TX) S10 = Power unit communication (Trip) S11 = Power unit comm. (Measurement) S12 = Expander board (slot D or E) S30-S48 = OPT-AF board (slot B)	Reset the fault and restart. Should the fault re-occur, contact your local distributor.
9	Undervoltage	DC-link voltage is under the voltage limits defined in Table 7. - Most probable cause: too low a supply voltage - AC drive internal fault Subcode in T.14: S1 = DC-link too low during run S2 = No data from power unit S3 = Undervoltage control supervision	In case of temporary supply voltage break reset the fault and restart the AC drive. Check the supply voltage. If it is adequate, an internal failure has occurred. Contact your local distributor.
10	Input line supervision	Input line phase is missing. Subcode in T.14: S1 = Phase supervision diode supply S2 = Phase supervision active front end	Check supply voltage, fuses and cable.
12	Brake chopper supervision	- No brake resistor installed - Brake resistor is broken - Brake chopper failure	Check brake resistor and cabling. If ok, the chopper is faulty. Contact your local distributor.
13	Frequency converter undertemperature	Heat sink temperature is under –10 °C.	

Table 61. Fault codes

Fault code	Fault	Possible cause	Correcting measures
14	Frequency converter overtemperature	3) Heat sink temperature is over 70 °C. Overtemperature warning is issued when the heat sink temperature exceeds 65 °C. 4) Circuit board temperature is over 85 ºC. Overtemperature warning is issued when the board temperature exceeds 75 ºC. Subcodes: S1 = Overtemperature warning in unit, board or phases S2 = Overtemperature in power board S3 = Liquid flow S4 = Overtemperature on ASIC board or driver boards	Cause 1): Check that values for Ith (Chapter 4.2) are not exceeded. Check the correct coolant flow and temperature. Also check the circulation for possible leaks. Check the ambient temperature. Make sure that the switching frequency is not too high in relation to ambient temperature and motor load. Cause 2): Circulation of air in the drive is blocked. The cooling fans are defect.
15	Motor stalled	Motor stall protection has tripped.	Check motor and load.
16	Motor overtemperature	Motor overheating has been detected by AC drive motor temperature model. Motor is overloaded.	Decrease the motor load. If no motor overload exists, check the temperature model parameters.
17	Motor underload	Motor underload protection has tripped.	Check load.
18	Unbalance (Warning only)	Unbalance between power modules in paralleled units. Subcode in T.14: S1 = Current unbalance S2 = DC-Voltage unbalance	Should the fault re-occur, contact your local distributor.
22	EEPROM checksum fault	Subcodes: S1 = Firmware interface power down variable checksum error. S2 = Firmware interface variable check sum error. S3 = System power down variable check sum error S4 = System parameter checksum error S5 = Application-defined power down, variable checksum error. S6 = Application-defined power down, variable checksum. S10 = System parameter checksum error (fault history entries, device valid, system menu parameters).	Should the fault re-occur, contact your local distributor.
24	Counter fault	Values displayed on counters are incorrect.	Take a critical attitude towards values shown on counters.

Table 61. Fault codes

Fault code	Fault	Possible cause	Correcting measures
25	Microprocessor watchdog fault	- Faulty operation - Component failure Subcodes: S1 = CPU watchdog timer S2 = ASIC reset	Reset the fault and restart. Should the fault re-occur, contact your distributor.
26	Startup prevented	Start-up of the drive has been prevented. Subcodes: S1 = Prevention of accidental start-up. S2 = Appears if START command is ON, when returning to READY STATE after Safe Disable has been active. S30 = Appears if START command is ON after system software has been downloaded, after application has been downloaded or application has been changed.	Cancel prevention of start-up if this can be done safely.
29	Thermistor fault	The thermistor input of option board has detected increase of the motor temperature. Subcodes: S1 =Thermistor input activated on OPT-AF board S2 = Special application	Check motor cooling and loading. Check thermistor connection (If thermistor input of the option board is not in use it has to be short circuited).
30	Safe Disable warning	Safe disable inputs SD1 and SD2 are activated through the option board OPT-AF.	Contact your distributor.
31	IGBT temperature (hardware)	IGBT Inverter Bridge overtemperature protection has detected too high a short-term overload current.	Check loading. Check motor size.
34	CAN bus communication	Sent message not acknowledged.	Ensure that there is another device on the bus with the same configuration.
35	Application	Problem in application software.	Contact your distributor. If you are application programmer check the application program.
36	Control unit	VACON® NXS Control Unit can not control VACON® NXP Power Unit and vice versa.	Change control unit.
37	Device changed (same type)	Option board or power unit changed. New device of same type and rating. Subcodes: S1 = Control board S2 = Control unit S3 = Power board S4 = Power unit S5 = Adapter board and slot	Reset. Device is ready for use. Old parameter settings will be used.

Table 61. Fault codes

Fault code	Fault	Possible cause	Correcting measures
38	Device added (same type)	Option board added. Subcodes: S1 = Control board S4 = Control unit S5 = Adapter board and slot	Reset. Device is ready for use. Old board settings will be used.
39	Device removed	Option board removed.	Reset. Device no longer available.
40	Device unknown Unknown option board or drive.	Subcode in T.14: S1 = Unknown device S2 = Power1 not same type as Power2 S3 = NXS or NXP1 and star coupler S4 = Software and ctrl unit incompatible S5 = Old control board version	Contact your local distributor.
41	IGBT temperature	IGBT Inverter Bridge overtemperature protection has detected too high a short term overload current	Check loading. Check motor size.
42	Brake resistor overtemperature	Subcodes: S1 = Internal brake chopper overtemp. S2 = Brake resistance too high (BCU) S3 = Brake resistance too low (BCU) S4 = Brake resistance not detected (BCU) S5 = Brake resistance leakage (earth fault) (BCU)	Reset unit. Set the deceleration time longer and restart. Dimensioning of the brake chopper is not correct. Use external brake resistor.
43	Encoder fault	Problem detected in encoder signals. Sub code in T.14: S1 = Encoder 1 channel A is missing S2 = Encoder 1 channel B is missing S3 = Both enc. 1 channels are missing S4 = Encoder reversed S5 = Encoder board missing S6 = Serial communication fault S7 = Channel A/Channel B mismatch S8 = Resolver/Motor pole pair mismatch S9 = Missed start angle	Check encoder channel connections. Check the encoder board.
44	Device changed (different type)	Option board or power unit changed. New device of different type or different rating than the previous one. Subcodes: S1 = Control board S2 = Control unit S3 = Power board S4 = Power unit S5 = Adapter board and slot	Reset Set the option board parameters again if option bard changed. Set AC drive parameters again if power unit changed.

Table 61. Fault codes

Fault code	Fault	Possible cause	Correcting measures
45	Device added (different type)	Option board of different type added. Subcodes: S1 = Control board S2 = Control unit S3 = Power board S4 = Power unit S5 = Adapter board and slot	Reset Set the option board parameters again.
49	Div by zero in application	A division by zero has occurred in the application program.	Contact your distributor. If you are application programmer check the application program.
50	Analogue input Iin < 4 mA (sel. signal range 4 to 20 mA)	Current at the analogue input is < 4 mA. - Control cable is broken or loose - Signal source has failed	Check the current loop circuitry.
51	External fault	Digital input fault.	
52	Keypad communication fault	Keypad communication fault The connection between the control keypad and the AC drive is broken.	Check keypad connection and possible keypad cable.
53	Fieldbus fault	The data connection between the fieldbus Master and the fieldbus board is broken.	Check installation. If installation is correct contact the nearest distributor.
54	Slot fault	Defective option board or slot.	Check board and slot. Contact the nearest distributor.
55	Actual value supervision		
56	PT100 board temp. fault	Temperature limit values set for the PT100 board parameters have been exceeded.	Find the cause of temperature rise.
57	Identification	Identification run has failed.	Run command was removed before completion of identification run. Motor is not connected to AC drive. There is load on motor shaft.
58	Brake	Actual status of the brake is different from the control signal.	Check mechanical brake state and connections.
59	Follower communication	SystemBus or CAN communication is broken between Master and Follower.	Check option board parameters. Check optical fibre cable or CAN cable.
60	Cooling	Coolant circulation on liquid-cooled drive has failed.	Check reason for the failure on external system.

Table 61. Fault codes

Fault code	Fault	Possible cause	Correcting measures
61	Speed error	Motor speed is unequal to reference.	Check encoder connection. PMS motor has exceeded the pull out torque.
62	Run disable	Run enable signal is low.	Check reason for Run enable signal.
63	Emergency stop	Command for emergency stop received from digital input or fieldbus.	New run command is accepted after reset.
64	Input switch open	Drive input switch is open.	Check the main power switch of the drive.

9.2 LOAD TEST WITH MOTOR

1. Connect the motor cables and check the right phase order. Also check that the motor rotates freely.
2. Check liquid cooling system operation.
3. Turn on the supply voltage and ensure that all input phases are connected to the unit.
4. Check DC link voltage by measuring with multimeter and compare the value to the one on monitoring page V1.8.
5. Select the application of your choice and set the needed parameters (see Start-up Quick Guide, step 8 on page 7.
6. Start the operation with lower Current Limit value and long Acceleration/Deceleration times.
7. If Closed Loop control mode is used, check direction of encoder and make necessary Closed Loop parameter settings. Check the correct operation of the encoder by running the system in open loop and check the signals in the expander board menu.
8. Run the motor without load between minimum and maximum frequencies and check the unit output current with a current clamp. Compare the value to the one on monitoring page V1.4.
9. Load the motor to nominal value if possible and repeat the current measurement. Follow the Unit Temperature value on page V1.9.

9.3 DC LINK TEST (WITHOUT MOTOR)

NOTE! There will be dangerous voltages present during this test!

1. Read carefully the safety instructions in Chapter 1 and follow them.
2. Connect a variable DC power supply to DC+ and DC– terminals. Make sure that all polarities are correct.
3. Slowly charge up the DC link to nominal voltage. Allow the system to remain at this level for at least one minute and check current.
4. If possible, continue increasing the DC-link voltage up to the trip limit. Fault F2 (see Chapter 9) should occur at 911 V DC (NX_5, 400–500 V units), at 1200 V DC (NX_6, 525–690 V units) and 1300 V DC (NX_8, 525–690 V units). Do not increase the voltage over the trip limit.
5. Bring the power supply voltage back to zero. Allow sufficient time for the capacitors to discharge.
6. Check the DC-bus voltage with a multimeter. When you read zero volts disconnect the power supply and reconnect all wires to the phase module.
7. If the phase module has been de-energized for an extended period of time (six months or longer) allow this voltage to remain for a minimum of 30 minutes – even 4 hours if time permits.

Through the above test procedure, two things are achieved:
1) It allows the caps to partially reform due to storage and shipping;
2) It allows any device failures to evidence themselves with a low power failure.

9.4 ERROR MESSAGE ON CONTROL PANEL DISPLAY

The alphanumerical keypad memory has been upgraded from 32 kbit to 64 kbit in VACON® NX AC drives. This allows the applications with larger parameter sets to be copied to keypad memory. For more information on control panel display, see Chapter 7.

If an application with larger parameter sets is uploaded into 32 kbit control panel, it shows an error message "Failed". A new control panel version with 64 kbit must be used to avoid the error message.

10. ACTIVE FRONT END (AFE)

10.1 INTRODUCTION

The VACON® NX Active Front End is used to transfer power between the AC input and intermediate DC circuit. The VACON® NX Active Front End has a two-way function. This means that when power is transferred from the AC input to the intermediate DC circuit, the VACON® NX Active Front End rectifies the alternating current and voltage. When power is transferred from the intermediate DC circuit to the AC input, the VACON® NX Active Front End inverts the direct current and voltage.

The Active Front End configurations consist of the unit itself, LCL filter, pre-charging circuit, control unit, AC fuses, main contactor/circuit breaker and DC fuses which you need to take into account when planning the switchgear configuration, see Figure 103.

10.2 DIAGRAMS

10.2.1 ACTIVE FRONT END BLOCK DIAGRAM

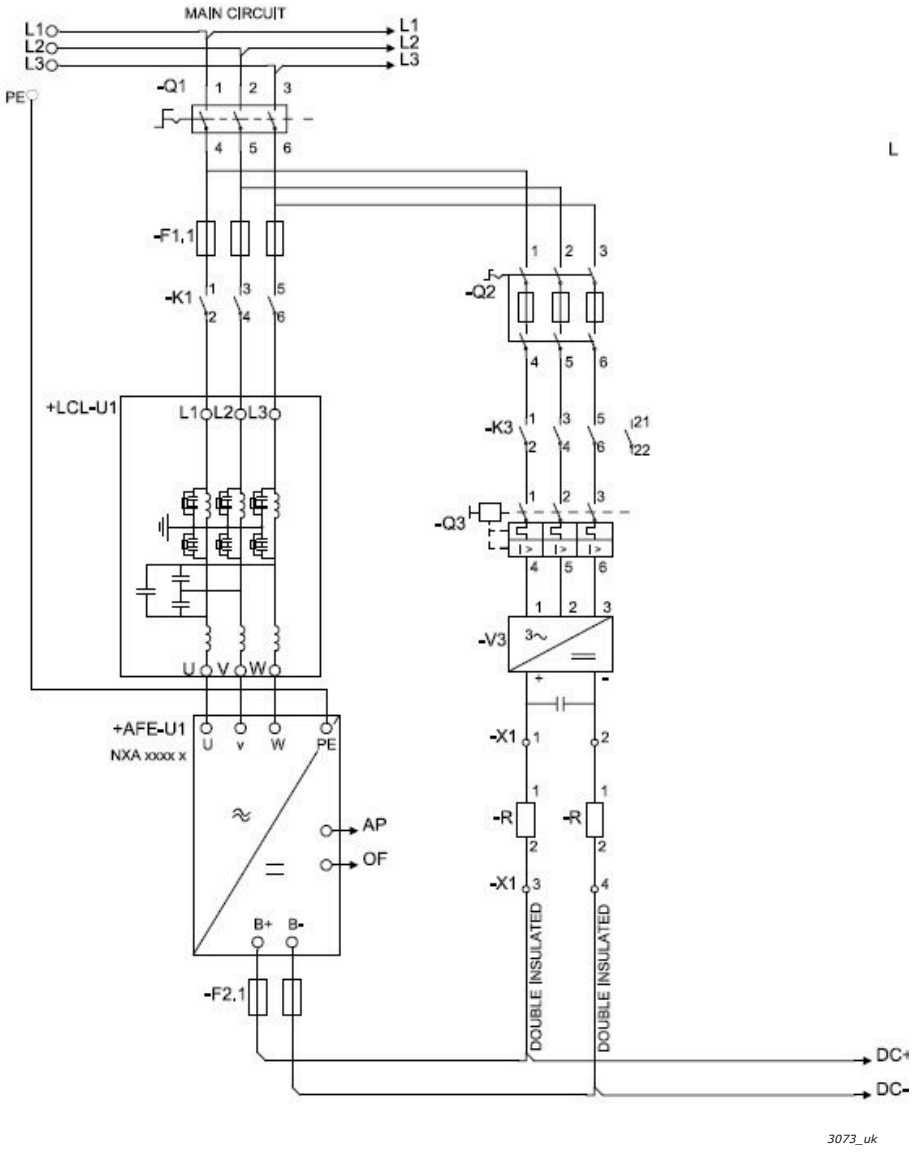

Figure 103. Active front end configuration

10.3 TYPE CODE

In the VACON® type code, the Active Front End is characterized by the characters **NXA** and number **2**, for example:

NXA	0300	5	A	0	T	0	**2**WF	A1A2000000

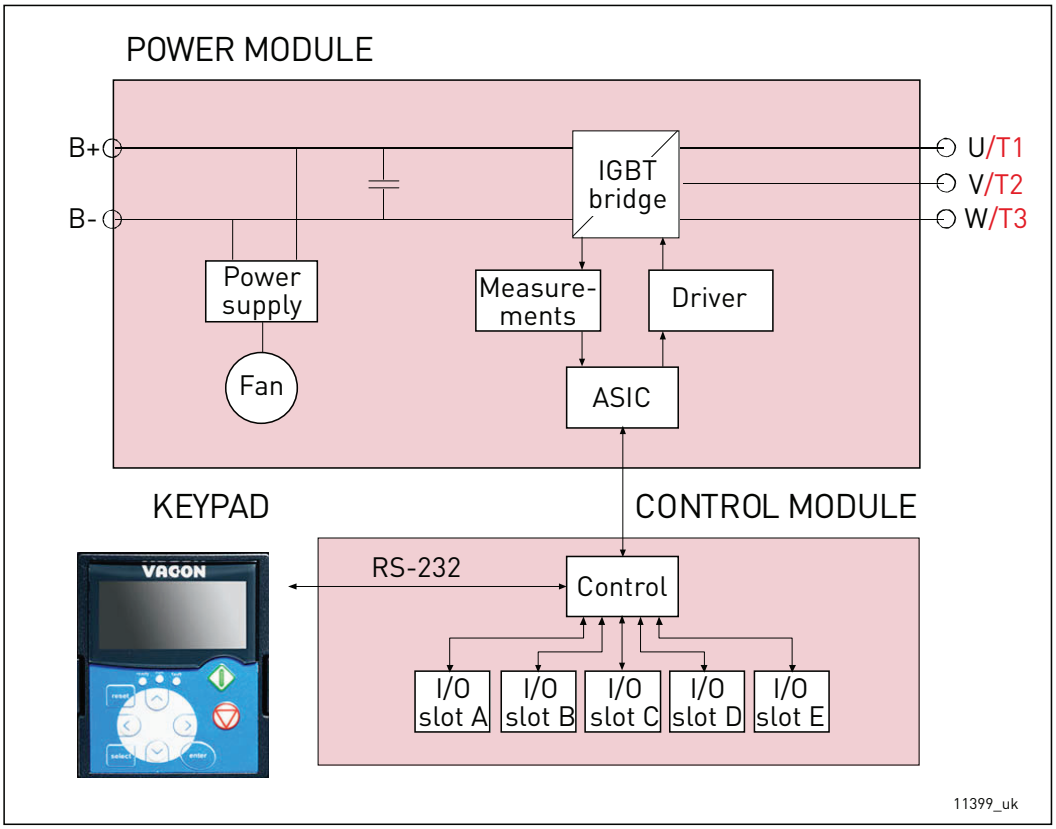

Figure 104. Active front end block diagram

10.4 ACTIVE FRONT END UNIT TECHNICAL DATA

NOTE: NX_8 AC drives are only available as Ch6x AFE/BCU/INU units.

Table 62. Technical data

Mains connection	Input voltage U_{in}	NX_5: 400–500 V AC (–10%...+10%); 465–800 V DC (–0%...+0%) NX_6: 525–690 V AC (–10%...+10%); 640–1100 V DC (–0%...+0%) NX_8: 525–690 V AC (–10%...+10%); 640–1200 V DC (–0%...+0%)	
	Input frequency	45...66 Hz	
	Connection to mains	Once per minute or less	
	DC-link capacitance	Voltage class 500 V:	Ch3 (16-31A units): 410 µF Ch3 (38-61A units): 600 µF CH4: 2400 µF CH5: 7200 µF CH61: 10800 µF CH62/CH72: 10800 µF CH63: 21600 µF CH64/CH74: 32400 µF 2*CH64/2*CH74: 64800 µF
		Voltage class 690 V:	CH61: 4800 µF CH62/CH72: 4800 µF CH63: 9600 µF CH64/CH74: 14400 µF 2*CH64/2*CH74: 28800 µF
Supply network	Networks	TN, TT, IT	
	Short circuit current	Maximum short circuit current has to be < 100 kA.	
	Rated apparent power	The rated apparent power of the supply network including generators and/or transformers should be greater than 50% of the total rated apparent power of the Active Front End units which are connected to the network.	
DC output connection	Voltage	1.35 x U_{in} x 1.1 (default DC-link voltage boosting is 110%)	
	Continuous output current	Rated current at nominal inflow cooling water temperature according to dimensioning charts.	
Control characteristics	Control method	Open Loop Vector Control	
	Switching frequency	NXA: Factory setting 3.6 kHz	

Table 62. Technical data

Ambient conditions	Ambient operating temperature	–10 °C (no frost)...+50 °C (at I_{th}) The VACON® NX Liquid-cooled drives must be used in an heated indoor controlled environment.
	Installation temperature	0...+70 °C
	Storage temperature	–40 °C...+70 °C; No liquid in heat sink under 0 ºC
	Relative humidity	5 to 96% RH, non-condensing, no dripping water
	Air quality: • Chemical fumes • Solid particles	 IEC 60721-3-3 Edition 2.2, AC drive in operation, class 3C3 IEC 60721-3-3 Edition 2.2, AC drive in operation, class 3S2 No corrosive gases
	Altitude	NX_5: (380–500 V): maximum 3000 m (in case network is not corner grounded) NX_6/NX_8: maximum 2000 m. For further requirements, contact factory 100-% load capacity (no derating) up to 1000 m; above 1000 m derating of maximum ambient operating temperature by 0.5 °C per each 100 m is required.
	Vibration EN 50178/EN 60068-2-6	5–150 Hz Displacement amplitude 0.25 mm (peak) at 3–31 Hz Maximum acceleration amplitude 1 G at 31–150 Hz
	Shock EN 50178, EN 60068-2-27	UPS Drop Test (for applicable UPS weights) Storage and shipping: maximum 15 G, 11 ms (in package)
	Enclosure class	IP00 (UL open type) / Open Frame standard in entire kW / HP range
	Pollution degree	PD2
EMC	Immunity	Fulfils IEC/EN 61800-3 EMC immunity requirements.
	Emissions	EMC level N for TN/TT networks EMC level T for IT networks
Safety		IEC/EN 61800-5-1 (2007), CE, UL, cUL, GOST R, (see unit nameplate for more detailed approvals) IEC 60664-1 and UL840 in overvoltage category III.
	Safe Torque Off (STO) board	The drive is equipped with VACON® OPTAF board for prevention of torque on motor shaft . Standards: prEN ISO 13849-1 (2004), EN ISO 13849-2 (2003), EN 60079-14 (1997), EN 954-1 (1996), cat. 3 (hardware disable); IEC 61508-3(2001), prEN 50495 (2006). See VACON® NX OPTAF STO Board User Manual for detailed information.

Table 62. Technical data

Control connections (apply to boards OPT-A1, OPT-A2 and OPT-A3)	Analogue input voltage	0...+10 V, R_i = 200 kΩ, (–10 V...+10 V joystick control) Resolution 0.1%, accuracy ±1%
	Analogue input current	0(4)...20 mA, Ri = 250 W differential
	Digital inputs (6)	Positive or negative logic; 18–24 V DC
	Auxiliary voltage	+24 V, ±10%, maximum voltage ripple < 100 mVrms; maximum 250 mA Dimensioning: maximum 1000 mA/control box 1 A external fuse required (no internal short-circuit protection on the control board)
	Output reference voltage	+10 V, +3%, maximum load 10 mA
	Analogue output	0(4)...20 mA; R_L maximum 500 Ω; Resolution 10 bit; Accuracy ±2%
	Digital outputs	Open collector output, 50 mA/48 V
	Relay outputs	2 programmable change-over relay outputs Switching capacity: 24 V DC/8 A, 250 V AC/8 A, 125 V DC/0.4 A Minimum switching load: 5 V/10 mA
Protections	Overvoltage trip limit	NX_5: 911 V DC NX_6: (CH61, CH62, CH63, CH64): 1258 V DC NX_8: 1300 V DC
	Undervoltage trip limit	NX_5: 333 V DC NX_6: 461 V DC NX_8: 461 V DC
	Earth fault protection	In case of earth fault in motor or motor cable, only the AC drive is protected.
	Mains supervision	Trips if any of the input phases is missing (AC drives only).
	Input phase monitoring	Trips if any of the output phases is missing.
	Unit overtemperature protection	Alarm limit: 65 °C (heat sink); 75 °C (circuit boards). Trip limit: 70 °C (heat sink); 85 °C (circuit boards).
	Overcurrent protection	Yes
	Unit overheat protection	Yes
	Short-circuit protection of +24 V and +10 V reference voltages	Yes

Table 62. Technical data

Liquid cooling	Allowed coolants	Demineralized water or pure water with the quality specified in Chapter 5.2.3.1. Ethylene glycol • DOWCAL 100 • Clariant Antifrogen N Propylene glycol • DOWCAL 200 • Clariant Antifrogen L
	Volume	See Table 15.
	Temperature of coolant	0...35 °C input (I_{th}); 35...55 ºC: derating required, see Chapter 5.3. Maximum temperature rise during circulation: 5 °C No condensation allowed. See Chapter 5.2.6.
	Coolant flow rates	See Chapter 5.2.4.3.
	System maximum working pressure	6 bar
	System maximum peak pressure	30 bar
	Pressure loss (at nominal flow)	Varies according to size. See Chapter 5.2.5.2.

10.5 POWER RATINGS

Table 63. Power ratings of VACON® NX Liquid-cooled AFE unit, supply voltage 400-500 V AC

VACON NX Liquid-cooled Front End; DC Bus voltage 465–800 V DC									
AFE type	AC Current			DC power				Power loss c/a/T*) [kW]	Enclosure size
	Thermal I_{th} [A]	Rated I_L [A]	Rated I_H [A]	400 V AC mains I_{th} [kW]	500 V AC mains I_{th} [kW]	400 V AC mains I_L [kW]	500 V AC mains I_L [kW]		
0168_5	168	153	112	113	142	103	129	2.5/0.3/2.8	CH5
0205_5	205	186	137	138	173	125	157	3.0/0.4/3.4	CH5
0261_5	261	237	174	176	220	160	200	4.0/0.4/4.4	CH5
0300_5	300	273	200	202	253	184	230	4.5/0.4/4.9	CH61
0385_5	385	350	257	259	324	236	295	5.5/0.5/6.0	CH61
0460_5	460	418	307	310	388	282	352	5.5/0.5/6.0	CH62
0520_5	520	473	347	350	438	319	398	6.5/0.5/7.0	CH62
0590_5	590	536	393	398	497	361	452	7.5/0.6/8.1	CH62
0650_5	650	591	433	438	548	398	498	8.5/0.6/9.1	CH62
0730_5	730	664	487	492	615	448	559	10.0/0.7/10.7	CH62
0820_5	820	745	547	553	691	502	628	10.0/0.7/10.7	CH63
0920_5	920	836	613	620	775	563	704	12.4/0.8/12.4	CH63
1030_5	1030	936	687	694	868	631	789	13.5/0.9/14.4	CH63
1150_5	1150	1045	767	775	969	704	880	16.0/1.0/17.0	CH63
1370_5	1370	1245	913	923	1154	839	1049	15.5/1.0/16.5	CH64
1640_5	1640	1491	1093	1105	1382	1005	1256	19.5/1.2/20.7	CH64
2060_5	2060	1873	1373	1388	1736	1262	1578	26.5/1.5/28.0	CH64
2300_5	2300	2091	1533	1550	1938	1409	1762	29.6/1.7/31.3	CH64

*) C = power loss into coolant, A = power loss into air, T = total power loss.

The enclosure class for all VACON® NX Liquid-cooled AC drives is IP00 (UL open type).

I_{th} = Thermal maximum continuous RMS current. Dimensioning can be done according to this current if the process does not require any overloadability or the process does not include any load variation.

I_L = Low overloadability current. Allows +10% load variation. 10% exceeding can be continuous.

I_H = High overloadability current. Allows +50% load variation. 50% exceeding can be continuous.

All values with cosφ = 0.99 and efficiency = 97.5%.

*) c = power loss into coolant; a = power loss into air; T = total power loss.

All power losses obtained using max. supply voltage, I_{th} and switching frequency of 3.6 kHz. All power losses are worst case losses.

Table 64. Power ratings of VACON® NX Liquid-cooled AFE unit, supply voltage 525-690 VAC

VACON NX Liquid-cooled Front End; DC Bus voltage 640–1100 VDC ***)									
Active front-end type	AC Current			DC power				Power loss c/a/T*) [kW]	Chassis
	Thermal I_{th} [A]	Rated I_L [A]	Rated I_H [A]	525 V AC mains I_{th} [kW]	690 V AC mains I_{th} [kW]	525 V AC mains I_L [kW]	690 V AC mains I_L [kW]		
0170_6	170	155	113	150	198	137	180	3.6/0.2/3.8	CH61
0208_6	208	189	139	184	242	167	220	4.3/0.3/4.6	CH61
0261_6	261	237	174	231	303	210	276	5.4/0.3/5.7	CH61
0325_6	325	295	217	287	378	261	343	6.5/0.3/6.8	CH62
0385_6	385	350	257	341	448	310	407	7.5/0.4/7.9	CH62
0416_6	416	378	277	368	484	334	439	8.0/0.4/8.4	CH62
0460_6	460	418	307	407	535	370	486	8.7/0.4/9.1	CH62
0502_6	502	456	335	444	584	403	530	9.8/0.5/10.3	CH62
0590_6	590	536	393	522	686	474	623	10.9/0.6/11.5	CH63
0650_6	650	591	433	575	756	523	687	12.4/0.7/13.1	CH63
0750_6	750	682	500	663	872	603	793	14.4/0.8/15.2	CH63
0820_6	820	745	547	725	953	659	866	15.4/0.8/16.2	CH64
0920_6	920	836	613	814	1070	740	972	17.2/0.9/18.1	CH64
1030_6	1030	936	687	911	1197	828	1088	19.0/1.0/20.0	CH64
1180_6	1180	1073	787	1044	1372	949	1247	21.0/1.1/22.1	CH64
1300_6	1300	1182	867	1150	1511	1046	1374	24.0/1.3/25.3	CH64
1500_6	1500	1364	1000	1327	1744	1207	1586	28.0/1.5/29.5	CH64
1700_6	1700	1545	1133	1504	1976	1367	1796	32.1/1.7/33.8	CH64

*) C = power loss into coolant, A = power loss into air, T = total power loss.

The enclosure class for all VACON® NX Liquid-cooled AC drives is IP00 (UL open type).

***) Mains voltage 640-1200 V DC for NX_8 inverter units.

I_{th} = Thermal maximum continuous RMS current. Dimensioning can be done according to this current if the process does not require any overloadability or the process does not include any load variation.

I_L = Low overloadability current. Allows +10% load variation. 10% exceeding can be continuous.

I_H = High overloadability current. Allows +50% load variation. 50% exceeding can be continuous.

All values with cosφ = 0.99 and efficiency = 97.5%.

*) c = power loss into coolant; a = power loss into air; T = total power loss.

All power losses obtained using max. supply voltage, I_{th} and switching frequency of 3.6 kHz. All power losses are worst case losses.

10.6 LIQUID-COOLED RLC FILTERS

10.6.1 INTRODUCTION

VACON® Liquid-cooled AFE units can be used with either liquid-cooled or air-cooled LCL filters. The standard liquid-cooled LCL filters are named RLC filter. The RLC filter type codes can be seen from Table 63. The RLC filters are not included in the standard delivery of the AFE units and therefore they need to be ordered separately. More information about Air Cooled LCL filters can be found from VACON® NX Active Front End User Manual.

10.6.2 WIRING DIAGRAMS

The RLC filter contains a 3-phase chokes (L_{net})on the mains side, capacitors bank (C_{bank}) and 3 pcs of 1-phase choke (L_{drive}) on the AFE side, Figure 105. The RLC also includes capacitors connected against ground potential. There are resistors connected across the capacitors for discharging them when the LCL filter is disconnected from the input power. The discharging resistors are 10 MΩ, 500 V, and 0.5 W.

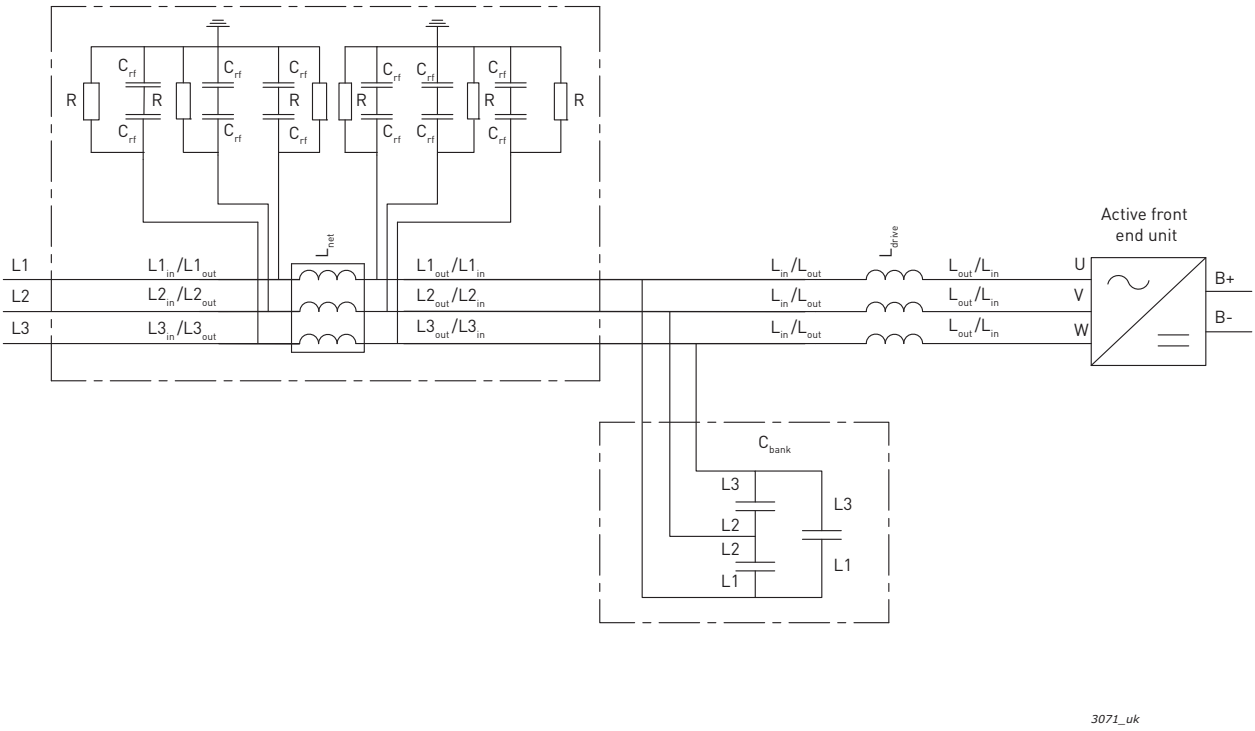

Figure 105. VACON® RLC filter wiring diagram

10.6.3 POWER RATING AND DIMENSIONS

Table 65. VACON® RLC ratings, drive suitability and dimensions

VACON NX Liquid-cooled regenerative line filters - IP00 (UL open type)							
RCL filter type	**Thermal current I_{th} [A]**	**Power loss c/a/T*) [kW]**	**Suitability [Drive/voltage: current]**	**Dimensions L_{net}, 1 pc WxHxD [mm]**	**Dimensions Ldrive, 1 pc (total 3 pcs), WxHxD [mm]**	**Dimensions C_{bank}, 1 pc WxHxD [mm]**	**Total weight [kg]**
RLC-0385-6-0	385	2.6/0.8/3.4	CH62/690 V AC: 325 A & 385 A	580 x 450 x 385	410 x 415 x 385	360 x 265 x 150	458
RLC-0520-6-0	520	2.65/0.65/3.3	CH62/500-690 V AC	580 x 450 x 385	410 x 415 x 385	360 x 265 x 150	481
RLC-0750-6-0	750	3.7/1/4.7	CH62/500 V AC, CH63/690 V AC	580 x 450 x 385	410 x 450 x 385	360 x 275 x 335	508
RLC-0920-6-0	920	4.5/1.4/5.9	CH63/500 V AC, CH64/690 V AC	580 x 500 x 390	410 x 500 x 400	360 x 275 x 335	577
RLC-1180-6-0	1180	6.35/1.95/8.3	CH63/500 V AC, CH64/690 V AC	585 x 545 x 385	410 x 545 x 385	350 x 290 x 460	625
RLC-1640-6-0	1640	8.2/2.8/11	CH64/500-690 V AC	585 x 645 x 385	420 x 645 x 385	350 x 290 x 460	736
RLC-2300-5-0	2300	9.5/2.9/12.4	CH64/500 V AC: 2060 A & 2300 A	585 x 820 x 370	410 x 820 x 380	580 x 290 x 405	896

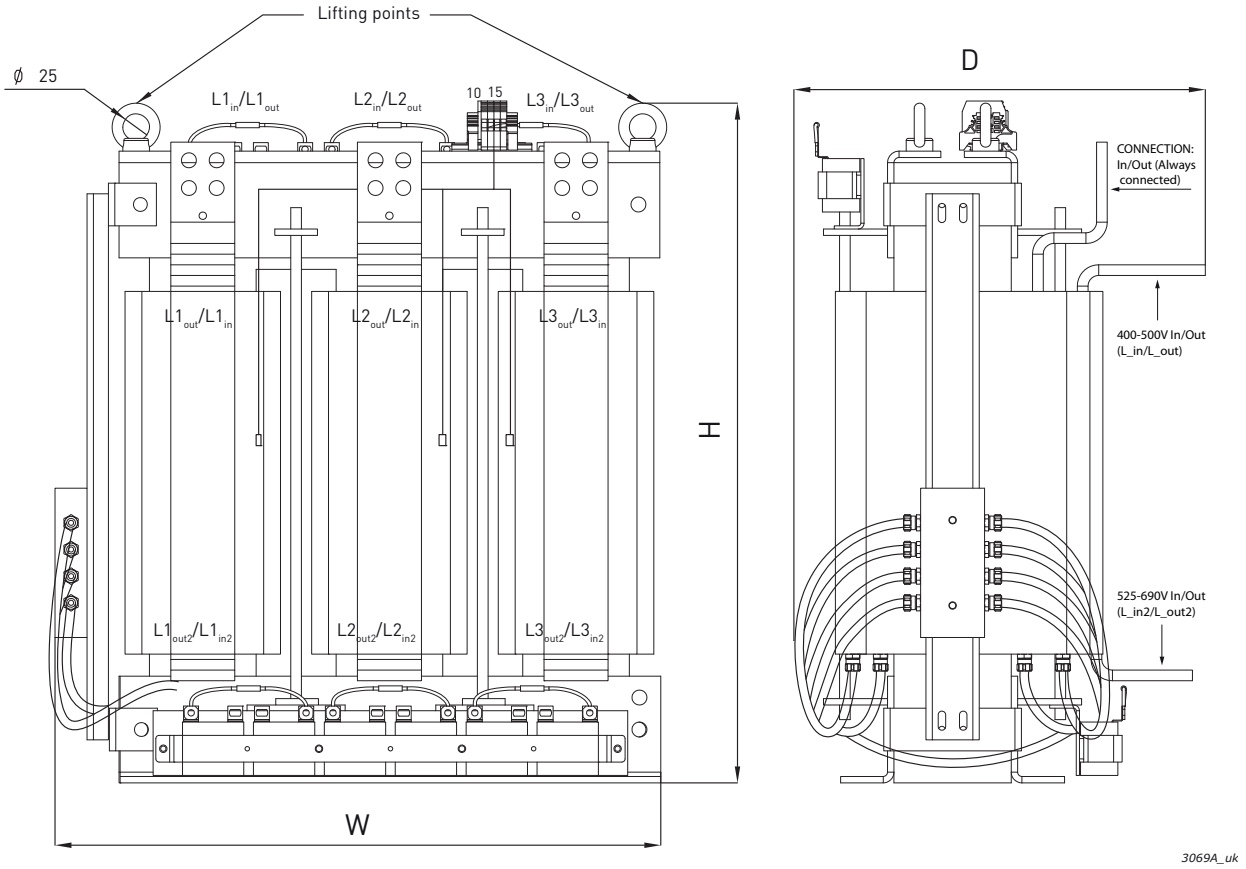

Figure 106. Example of L_{net} choke of a VACON® RLC filter

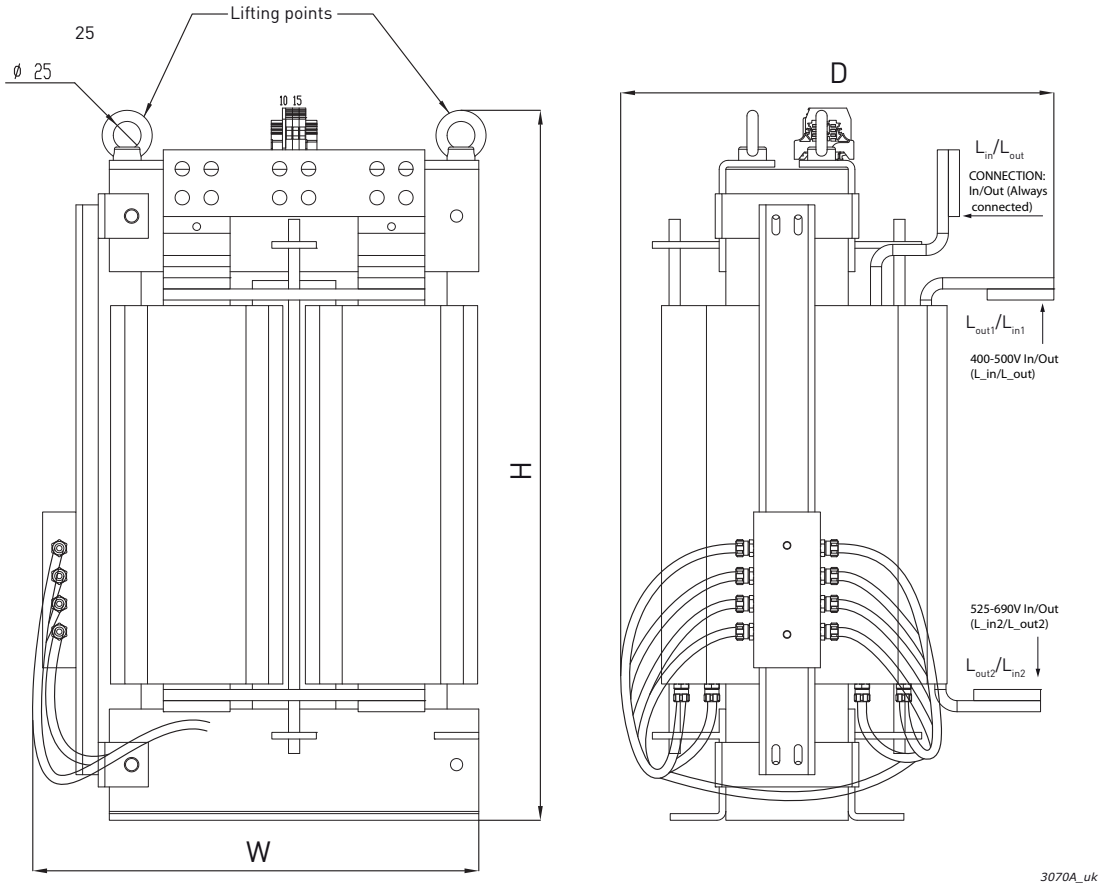

Figure 107. Example of L_{afe} choke of a VACON® RLC filter

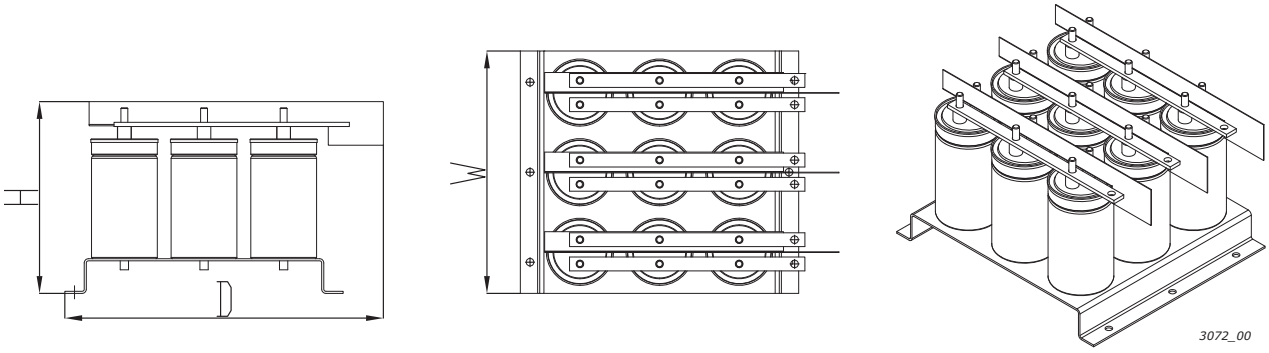

Figure 108. Example of capacitor bank (C_{bank}) of a VACON® RLC filter

10.6.4 TECHNICAL DATA

Table 66. VACON® RLC technical data

AC connections	Voltage U_{in}	Same as the NXA unit.
	Frequency f_{in}	50 or 60 Hz + 2%.
	Continuous output current	See current rating of filter.
	Switching frequency	3.6 kHz
Ambient conditions	Ambient temperature during operation	-10...+50 °C
	Installation temperature	0...+70 °C
	Storage temperature	-40...+70 °C, no liquid in filter under 0 °C.
	Relative humidity	Same as the NXA unit.
	Enclosure class	IP00 (UL open type)
Liquid cooling	Allowed cooling agents	Drinking water, demineralized water or a mixture of water and glycol. (To avoid electromechanical corrosion it is necessary to add an inhibitor.)
	Temperature of cooling agent	0...+60 °C
	Cooling agent flow rate	8 l/min for one choke, total 32 l/min (for 1pcs L_{net} choke and 3 pcs L_{drive} chokes).
	System max working pressure	6 bar
	Coolant connection	G3/8" female thread x 2 pcs. (1 pc inlet / 1 pc outlet)
Protection	Over-temperature monitoring	Thermal relay at each winding of the chokes. Thermal relays connected in series between terminals 10 and 15. Relay contact type: normally closed. Switching temperature: 150 °C.

10.6.5 REMOVING DISCHARGING RESISTORS

If the filter is used in a network fitted with an earth fault protection relay, the discharging resistors should be removed. If the discharging resistors are not removed, the earth fault monitoring device might indicate a very low leakage resistance. **The resistors must be connected so that the capacitors are discharged when disconnecting from the input power.** The wiring diagram of an alternative discharging circuit can be seen in Figure 109. The discharging resistors should be 100 kΩ, 500 V, and 2 W. Failure to ensure the discharging of capacitors take a very long time to discharge.

Figure 110 and Figure 111 have a blue marking on the lead that has to be removed from each capacitors if the discharge resistor is not to be used.

WARNING! If you do not allow a total discharge of the system before starting the modification, it is likely that you will get an electric shock in spite of the fact the system is disconnected from the power supply.

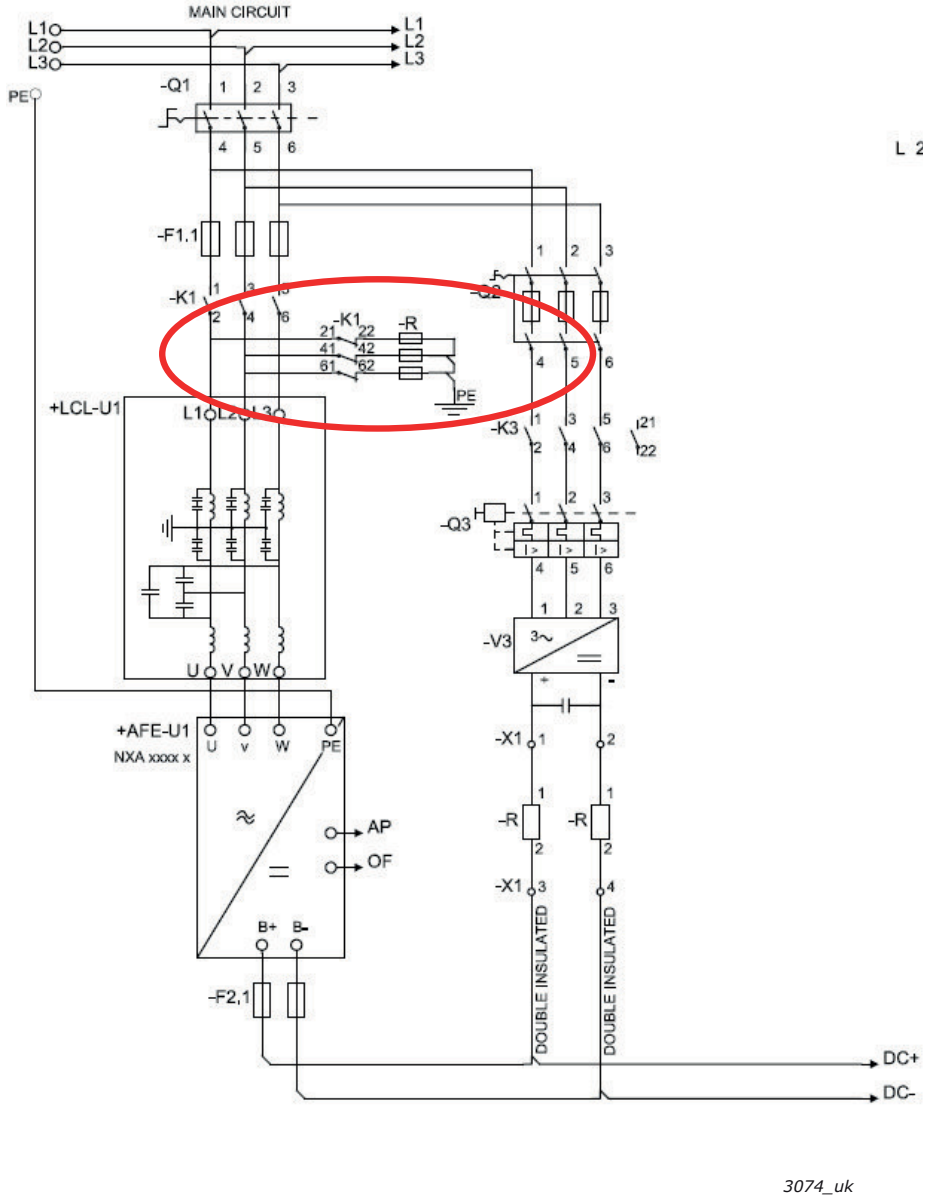

Figure 109. Wiring diagram of the alternative discharging circuit configuration

10.6.6 REMOVING HF CAPACITORS

If a PWM modulated rectifier from another manufacturer is connected to the same input transformer, the capacitors must be removed! Otherwise the capacitors must not be removed.

Figure 110 and Figure 111 have a red marking on the lead that has to be removed from each capacitor if the interference suppression capacitors are not to be used. Removing the lead disconnects the capacitors from ground potential.

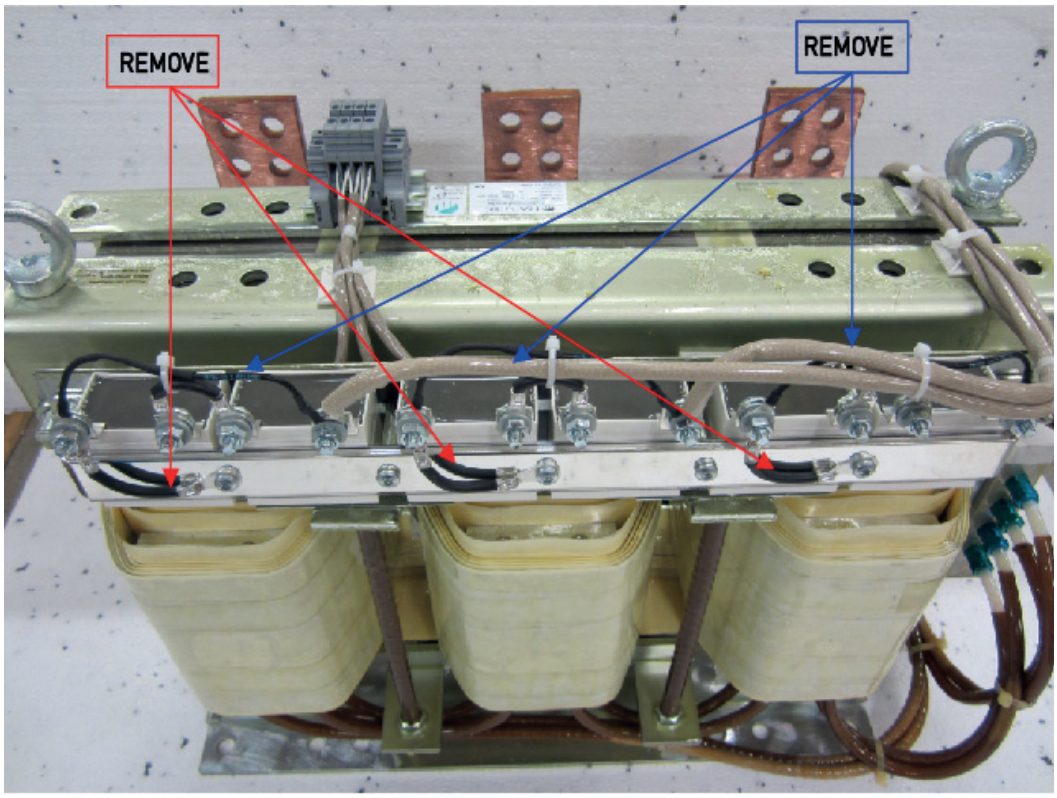

11400_uk

Figure 110. HF capacitors in RLC filters

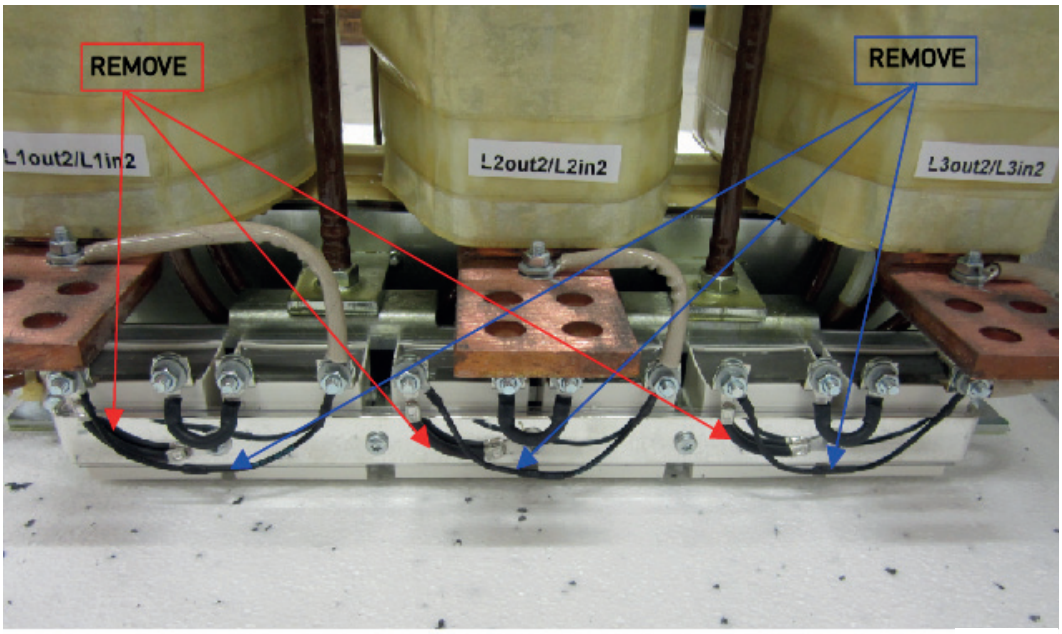

11401_uk

Figure 111. HF capacitors in RLC filters

10.7 ACTIVE FRONT END - FUSE SELECTION

AC fuses are used to protect the input network in case the Active Front End unit or the LCL filter is faulty. DC fuses are used to protect the Active Front End unit and the LCL filter in case there is a short circuit in the DC buses. If DC fuses are not used, short-circuit in the DC buses will cause a loading of the Active Front End unit. Vacon Ltd will not assume any responsibility for damages caused by insufficient protection. **The warranty becomes void if the drive is not equipped with appropriate fuses.**

Fuse information

The values in tables are based on maximum ambient temperature of +50 °C.

Fuse sizes can differ in the same chassis. Make sure that the Isc of the supply transformer is high enough to burn fuses fast enough.

Check the current rating of the fuse bases according to the input current of the drive.

The physical size of the fuse is chosen on the basis of the fuse current: Current < 250 A (size 1 fuse), current > 250 A (size 3 fuse).

The aR fuses are thermally rated into switch fuse in +50 °C ambient temperature.

To ensure fuse performance, make sure that the available supply short circuit current is sufficient. See the minimum required short circuit current ($I_{cp,mr}$) in the fuse tables.

The required AC fuse selection for the active front end unit can be found fromTable 67 and Table 68.
The required DC fuse selection for the active front end unit can be found from Table 38 and Table 39.

10.7.1 FUSE SIZES, ACTIVE FRONT END UNITS (AC SUPPLY)

Table 67. Fuse sizes for VACON® NX AFE units (380—500 V)

Chassis	Type	I_{th} [A]	Min. short circuit current $I_{cp,mr}$ [A]	Fuse size	DIN43620	'TTF' threaded end	'TTF' threaded end	Qty. of fuses / drive 3~
					aR fuse part nr.	aR fuse part nr.	aR fuse part nr.	
CH3	0016	16	190	DIN000	NH000UD69V40PV	PC30UD69V50TF	-	3
CH3	0022	22	190	DIN000	NH000UD69V40PV	PC30UD69V50TF	-	3
CH3	0031	31	270	DIN000	NH000UD69V63PV	PC30UD69V63TF	-	3
CH3	0038	38	400	DIN000	NH000UD69V100PV	PC30UD69V100TF	-	3
CH3	0045	45	400	DIN000	NH000UD69V100PV	PC30UD69V100TF	-	3
CH3	0061	61	520	DIN00	NH00UD69V125PV	PC30UD69V125TF	-	3
CH4	0072	72	1000	DIN00	NH00UD69V200PV	PC30UD69V200TF	-	3
CH4	0087	87	1000	DIN00	NH00UD69V200PV	PC30UD69V200TF	-	3
CH4	0105	105	1000	DIN00	NH00UD69V200PV	PC30UD69V200TF	-	3
CH4	0140	140	2000	DIN1	NH1UD69V315PV	PC30UD69V315TF	-	3
CH5	0168	168	2000	DIN1	NH1UD69V315PV	PC30UD69V315TF	-	3
CH5	0205	205	2700	DIN1	NH1UD69V400PV	PC30UD69V400TF	-	3
CH5	0261	261	3400	DIN2	NH2UD69V500PV	PC31UD69V500TF	-	3
CH61	0300	300	4200	DIN3	NH3UD69V630PV	PC32UD69V630TF	-	3
CH61	0385	385	4200	DIN3	NH3UD69V630PV	PC32UD69V630TF	-	3
CH62	0460	460	7600	DIN3	NH3UD69V1000PV	PC33UD69V1000TF	-	3
CH62	0520	520	7600	DIN3	NH3UD69V1000PV	PC33UD69V1000TF	-	3
CH62	0590	590	9000	DIN3	PC73UB69V1100PA	PC33UD69V1100TF	-	3
CH62	0650	650	11000	DIN3	PC73UB69V1250PA	PC33UD69V1250TF	-	3
CH62	0730	730	11000	DIN3	PC73UB69V1250PA	PC33UD69V1250TF	-	3
CH63	0820	820	12200	DIN3	NH3UD69V800PV	PC32UD69V800TF	PC44UD75V16CTQ	6 (3)
CH63	0920	920	15200	DIN3	NH3UD69V1000PV	PC33UD69V1000TF	PC44UD75V16CTQ	6 (3)
CH63	1030	1030	15200	DIN3	NH3UD69V1000PV	PC33UD69V1000TF	PC44UD75V18CTQ	6 (3)
CH63	1150	1150	18000	DIN3	PC73UB69V1100PA	PC33UD69V1100TF	PC44UD75V20CTQ	6 (3)
CH64	1370	1370	22800	DIN3	NH3UD69V1000PV	PC33UD69V1000TF	PC44UD75V24CTQ	9 (3[1])
CH64	1640	1640	22800	DIN3	NH3UD69V1000PV	PC33UD69V1000TF	PC44UD70V27CTQ	9 (3[1])
CH64	2060	2060	33000	DIN3	PC73UB69V1250PA	PC33UD69V1250TF	PC44UD69V34CTQB	9 (3[1])
CH64	2300	2300	33000	DIN3	PC73UB69V1250PA	PC33UD69V1250TF	PC47UD70V36CP50	9 (3[1])

Table 68. Fuse sizes for VACON® NX AFE units (525—690 V)

Chassis	Type	I_{th} [A]	Min. short circuit current $I_{cp,mr}$ [A]	DIN43620		TTF threaded end "7X" or size 83 with end contacts	TTF threaded end contacts in size 83 or size 84	Qty. of fuses / drive 3~
				Fuse size	aR fuse part nr.			
CH61	0170	170	2250	DIN1	PC71UD13C315PA	PC71UD13C315TF	-	3
CH61	0208	208	3500	DIN1	PC71UD13C400PA	PC71UD13C400TF	-	3
CH61	0261	261	3800	DIN1	PC73UD13C500PA	PC73UD13C500TF	-	3
CH62	0325	325	5200	DIN3	PC73UD13C630PA	PC73UD13C630TF	-	3
CH62	0385	385	5200	DIN3	PC73UD13C630PA	PC73UD13C630TF	-	3
CH62	0416	416	7900	DIN3	PC73UD11C800PA	PC73UD13C800TF	-	3
CH62	0460	460	7900	DIN3	PC73UD11C800PA	PC73UD13C800TF	-	3
CH62	0502	502	7900	DIN3	PC73UD10C900PA	PC73UD13C800TF	-	3
CH63	0590	590	12500	DIN3	PC73UD90V11CPA	PC73UD95V11CTF	-	3
CH63	0650	650	12500	DIN3	PC73UD90V11CPA	PC73UD95V11CTF	-	3
CH63	0750	750	10400	DIN3	PC73UD13C630PA	PC73UD13C630TF	PC83UD11C13CTF	6(3)[1]
CH64	0820	820	15800	DIN3	PC73UD11C800PA	PC73UD13C800TF	PC83UD11C14CTF	6(3)[1]
CH64	0920	920	15800	DIN3	PC73UD11C800PA	PC73UD13C800TF	PC83UD95V16CTF	6(3)[1]
CH64	1030	1030	25000	DIN3	PC73UD90V11CPA	PC73UD95V11CTF	PC84UD12C18CTQ	6(3)[1]
CH64	1180	1180	25000	DIN3	PC73UD90V11CPA	PC73UD95V11CTF	PC84UD11C20CTQ	6(3)[1]
CH64	1300	1300	23700	DIN3	PC73UD11C800PA	PC73UD13C800TF	PC84UD11C22CTQ	9(3)[1]
CH64	1500	1500	37500	DIN3	PC73UD90V11CPA	PC73UD95V11CTF	PC84UD11C24CTQ	9(3)[1]
CH64	1700	1700	37500	DIN3	PC73UD90V11CPA	PC73UD95V11CTF	PC84UD90V30CTQ	9(3)[1]

For DC fuse selection use table for liquid cooled inverters (page 90).

[1] Quantity of fuses needed of TTF types PC4********** and PC8**********.

10.8 PRE-CHARGING CIRCUIT

The Active Front End unit requires an external pre-charging circuit. The purpose of the pre-charging unit is to charge the voltage in the intermediate circuit to a level sufficient for connecting the Active Front End unit to the mains. The charging time depends on the capacitance of the intermediate circuit and the resistance of the charging resistors. The technical specifications of manufacturer's standard pre-charging circuits are shown in Table 69. Pre-charging circuits are suitable for 380-500 V AC and 525-690 V AC.

The pre-charging components can be ordered separately. Components of the pre-charging circuit are 2 pcs charging resistors, the contactor, the diode bridge and the snubber capacitor, see Table 70. Each pre-charging circuit has maximum charging capacity, see Table 69. If the capacitance of the intermediate circuit in the system exceeds the values shown, contact your nearest distributor.

Table 69. Capacitance minimum and maximum values for pre-charging circuit

Pre charging type	Resistance	Capacitance minimum	Capacitance maximum
CHARGING-AFE-FFE-FI9	2 x 47 R	4950 µF	30000 µF
CHARGING-AFE-FFE-FI10	2 x 20 R	9900 µF	70000 µF
CHARGING-AFE-FFE-FI13	2 x 11 R	29700 µF	128000 µF

Table 70. Pre-charging components configuration FI9 AFE / CHARGING-AFE-FFE-FI9

Item	Quantity	Description	Manufacturer	Product Code
1	1	Diode Bridge	Semikron	SKD 82
2	2	Charging resistors	Danotherm	CAV150C47R
3	1	Snubber capacitor	Rifa	PHE448
4	1	Contactor	Telemecanique	LC1D32P7

Table 71. Pre-charging components configuration FI10 AFE / CHARGING-AFE-FFE-FI10

Item	Quantity	Description	Manufacturer	Product Code
1	1	Diode Bridge	Semikron	SKD 82
2	2	Charging resistors	Danotherm	CBV335C20R
3	1	Snubber capacitor	Rifa	PHE448
4	1	Contactor	Telemecanique	LC1D32P7

Table 72. Pre-charging components configuration FI13 AFE / CHARGING-AFE-FFE-FI13

Item	Quantity	Description	Manufacturer	Product Code
1	1	Diode Bridge	Semikron	SKD 82
2	2	Charging resistors	Danotherm	CBV335C11R
3	1	Snubber capacitor	Rifa	PHE448
4	1	Contactor	Telemecanique	LC1D32P7

The Active Front End unit must not be connected to mains without pre-charging. In order to ensure the correct operation of the pre-charging circuit, the input circuit-breaker or contactor, as well as the pre-charging circuit contactor, must be controlled by the Active Front End unit. The input circuit-

breaker or contactor as well as the pre-charging circuit contactor must be connected as shown in Figure 112.

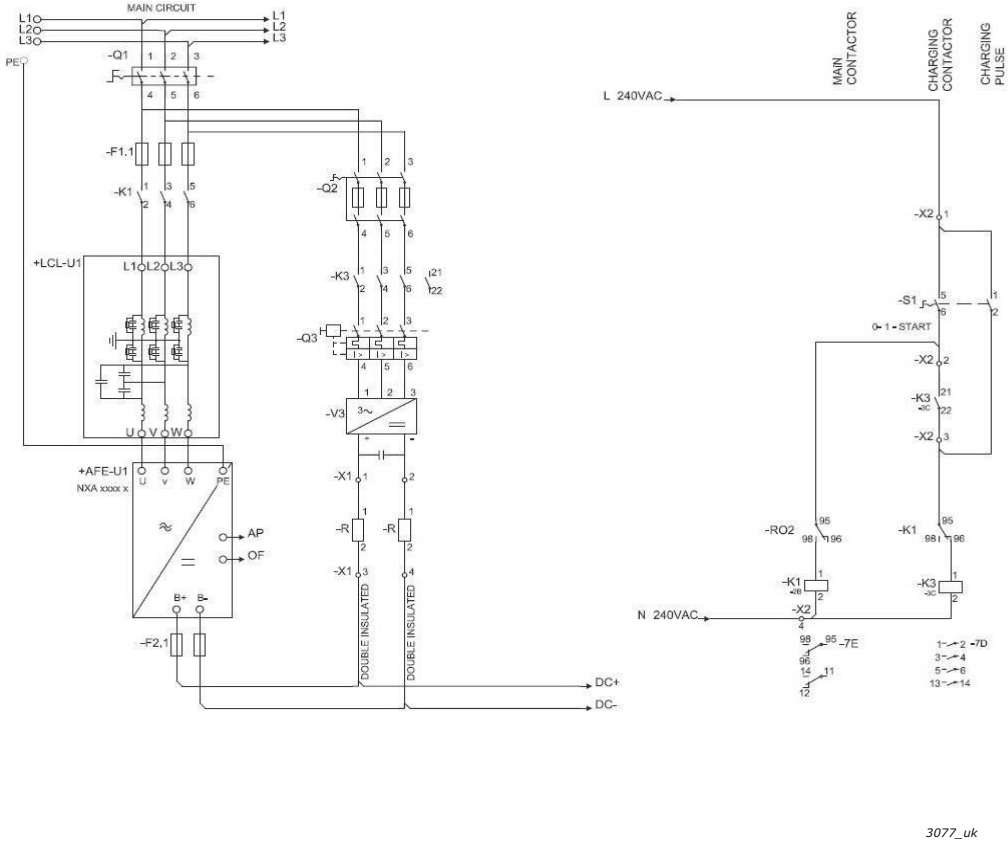

Figure 112. Wiring diagram for AFE unit

The example shown in Figure 112 uses a spring-return switch. The switch has positions 0-1-START. The spring returns the switch from position START to position 1. To start the pre-charging, the switch is turned from position 0 via 1 to START. When pre-charging starts, the switch can be released and it returns to position 1. No other control measures are required. The Active Front End application controls the main contactor of the system with Relay Output RO2, see Figure 113. When pre-charging of the intermediate circuit is ready the main contactor will be closed. The status of the main contactor is monitored via digital input (Default is DIN4). As a default the main contactor monitoring is ON but it can be set OFF with parameter. The main contactor should not be possible close without pre-charging.

To open the main contactor, simply turn the switch to 0. The contactor should not be opened under load. Opening the contactor under load will shorten its service life.

NOTE! Wirings what are used for connecting the pre-charging circuit to the intermediate circuit has to be double insulated.

NOTE! Enough space must be reserved around the resistors to ensure sufficient cooling. Don't place any heat sensitive components near the resistors.

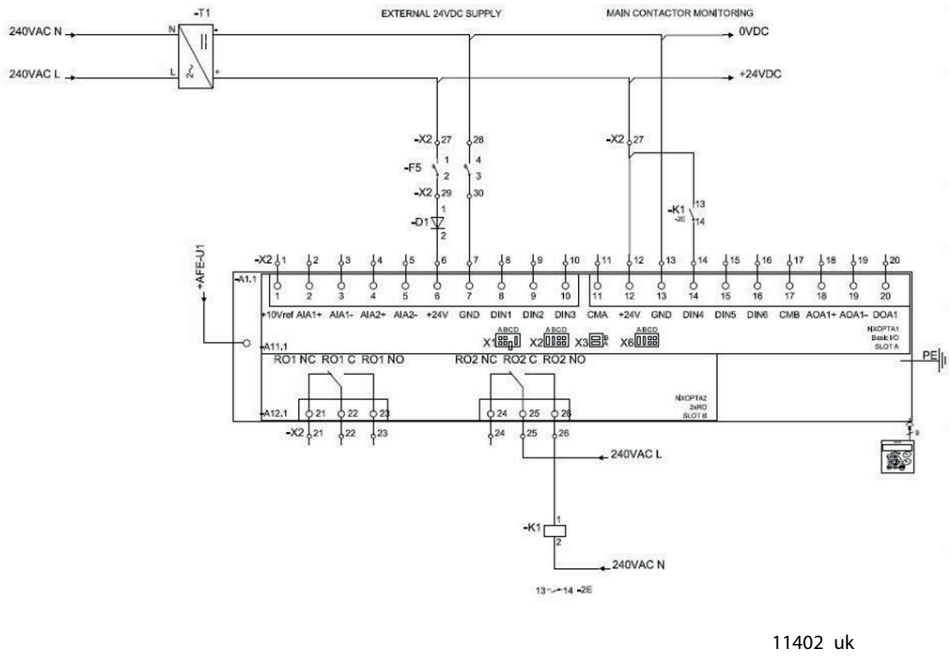

Figure 113. Wiring diagram for control unit

10.9 PARALLELING

The power of the input group can be increased by connecting several Active Front End units in parallel. Paralleling refers to Active Front End units connected in the same input transformer. Active Front End units of different power ratings can also be connected in parallel. No communication between the units is required; they work independently. Manufacturer's standard LCL filters must be used for paralleling. If LCL filters other than these are used in Active Front End units connected in parallel, too large circulation currents may be generated between the Active Front End units. All Active Front units must be set for 5% drooping and PWM Synch must be set for Enable. See the Application manual for specific parameter settings.

Each Active Front End unit connected in parallel must have its own short-circuit protection on AC and DC sides. The fuses are selected in accordance with Chapter 14.3. When paralleling, attention must be paid to the sufficient short-circuit capacity of the system.

The derating of Active Front End units connected in parallel is 5% of the DC power; this should be taken into account when selecting the input unit.

If a device is to be isolated from the AC and DC voltages, and other Active Front End units connected in parallel are also to be used, separate isolators are required in the AC input and DC output. The AC input can be isolated using a compact circuit-breaker, an ordinary circuit-breaker or a fuse switch. Contactors are not suitable for isolating the AC input because they cannot be locked in the safe position. The DC output can be isolated using a fuse switch. The pre-charging circuit must also be isolated from the AC input. A load isolation switch or safety isolation switch can be used for this. The device can also be connected to mains even when the other devices connected in parallel are already connected and running. In such a case, the isolated device must first be pre-charged. When that is done, the AC input can be switched on. After this, the device can be connected to the intermediate DC circuit.

10.10 COMMON PRE-CHARGING CIRCUIT

In case of paralleled Active Front End units, one common pre-charging circuit can be used, see Figure 114. Standard pre-charging circuits can be used if the capacitance of the intermediate circuit not exceeds maximum value. If all paralleled Active Front End units have a common circuit breaker, the breaker can be controlled by one of the Active Front End units. If each paralleled Active Front End unit has its own circuit breaker, each Active Front End controls it's own circuit breaker. The circuit diagram for control, see Figure 112 and Figure 113.

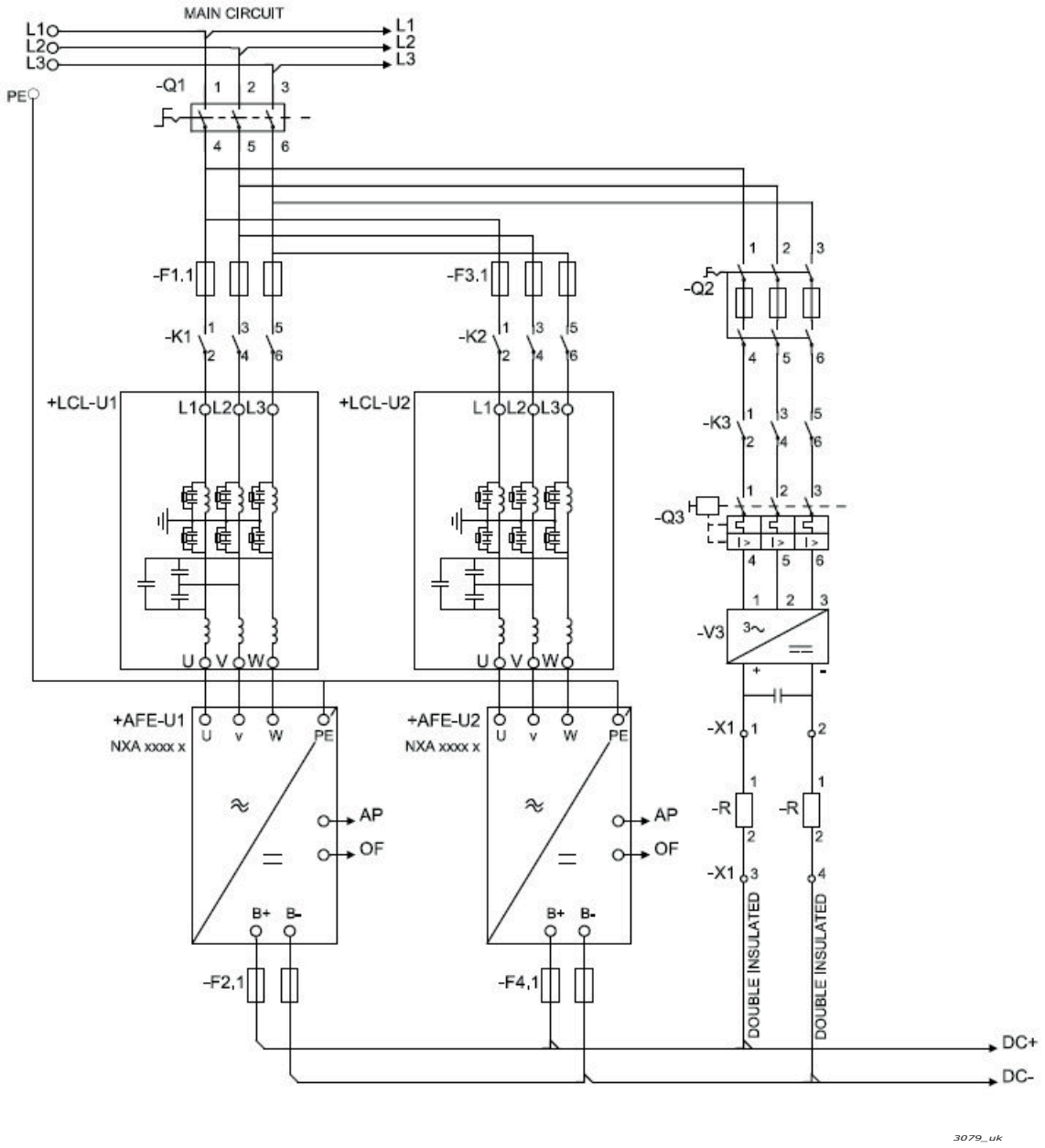

Figure 114. Active Front End units parallel connection with one common pre-charging circuit

10.11 EACH ACTIVE FRONT END UNIT HAS THE PRE-CHARGING CIRCUIT

Each Active Front End can have an own pre-charging circuit, and each unit is controlling it's own pre-charging and main contactor, see Figure 115. One control switch can be used but if an Active Front End unit needs to be controlled independently, separate switches are needed. With this the system is more redundant than with a common pre-charging circuit. The circuit diagram for control, see Figure 112 and Figure 113.

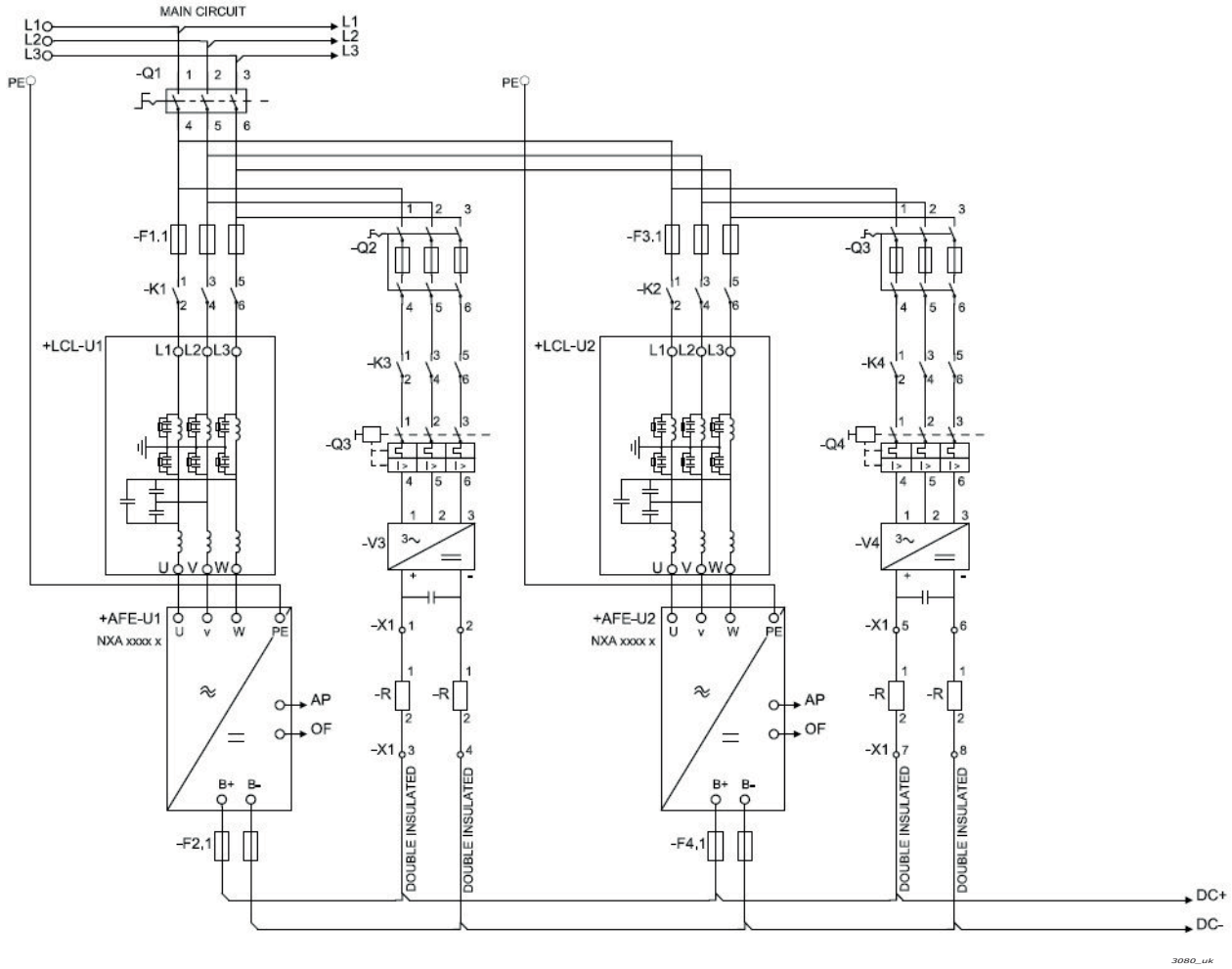

Figure 115. Active Front End units parallel connection with own pre-charging circuits

11. NON-REGENERATIVE FRONT END (NFE)

11.1 INTRODUCTION

The VACON® NX Non-regenerative Front End (NFE) is used to transfer power from the AC input to the intermediate DC circuit to which the inverter units are connected.

The Non-regenerative Front End configurations consist of the unit itself, choke, pre-charging circuit, control unit with accessories, AC fuses, circuit breaker and DC fuses which you need to take into account when planning the switchgear configuration, see Figure 116. The construction is for 12-pulse network but it can be used as 6-pulse.

Other accessories such as breakers, fuses and pre-charging components etc. should be acquired separately.

NOTE! If you use other chokes than the recommended ones, contact your nearest distributor to ensure compatibility.

Scope of supply:

The NFE unit consists of the power module (-TB1), NXP control (-AA1) and its option boards, control accessories and a choice of chokes (-RA1.1 and -RA1.2). The option board slots A–D are fixed. The option board slot E can be configured.

These external control accessories need to be assembled separately:

- 2 pieces of input phase monitor relays (-PRM1.1 and -PRM1.2)
- DC-voltage transducer 1500 V DC - 10 V DC (-KF10)

11.2 DIAGRAMS

11.2.1 NON-REGENERATIVE FRONT END UNIT WIRING DIAGRAMS

The NFE unit has a typical control circuit. Some of the inputs and outputs can be set with parameters for optional purposes. See the parameter list in Chapter 11.13.

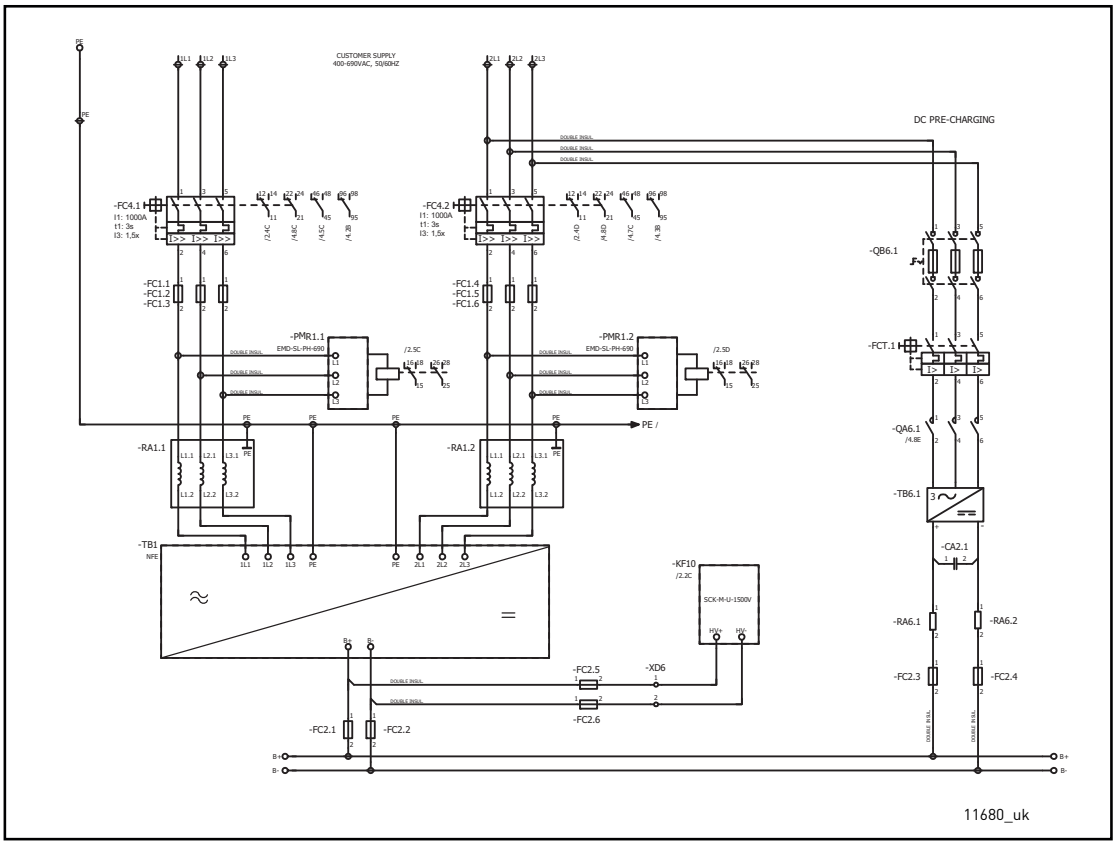

Figure 116. Wiring diagram for NFE unit

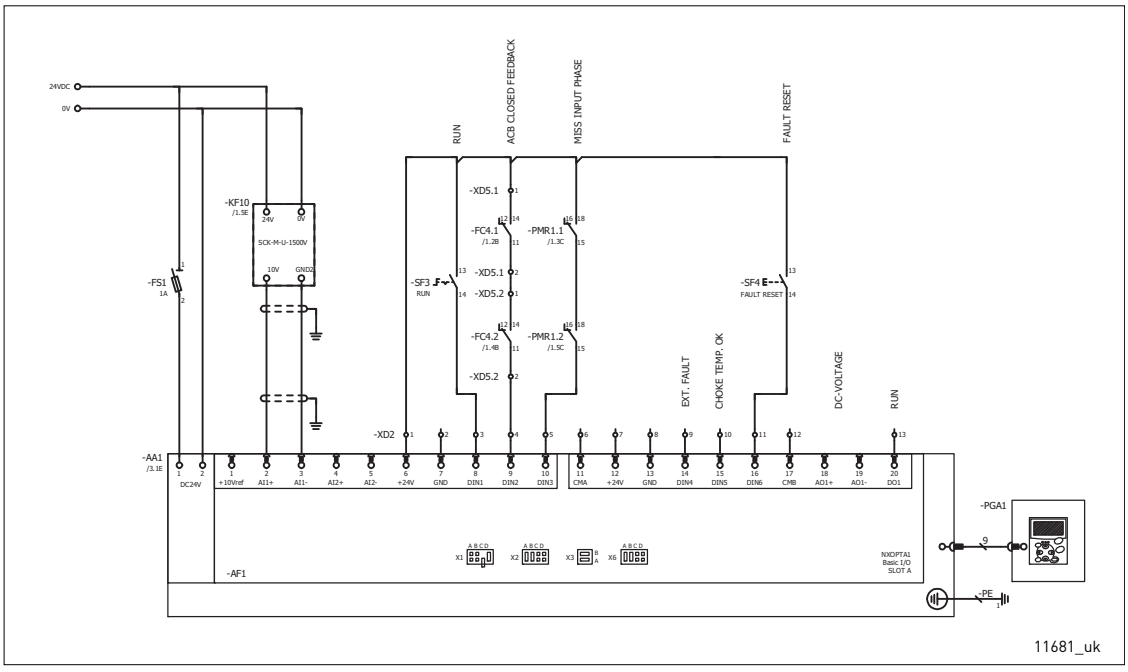

Figure 117. Wiring diagram for controls, OPTA1.

NOTE! The NXP control requires a minimum of 1 A external 24 V DC power supply.

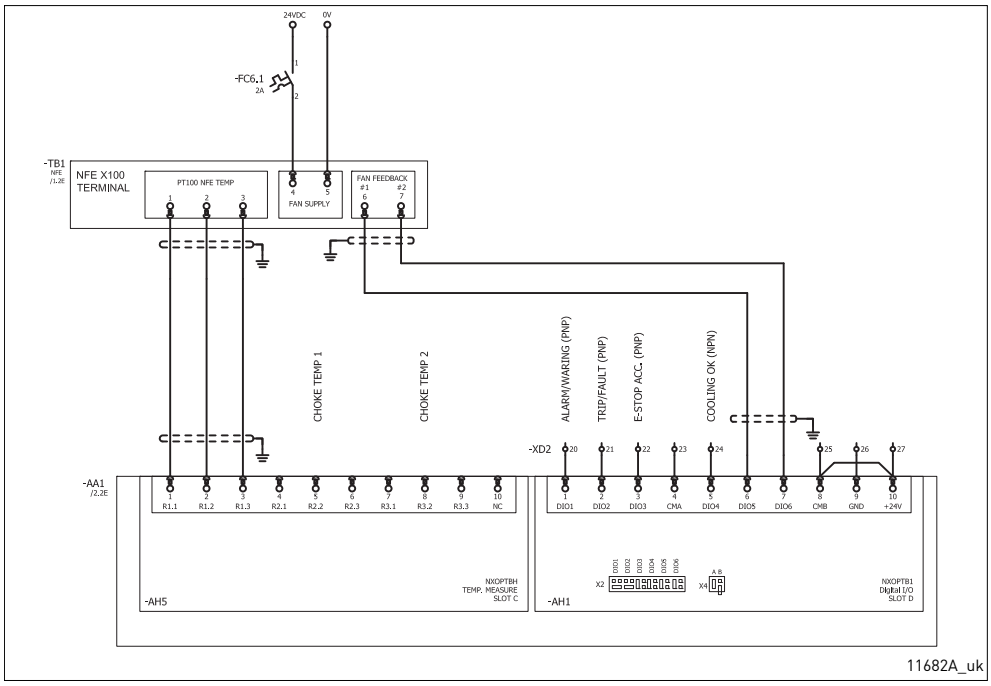

Figure 118. Wiring diagram for controls, OPTBH, OPTB1

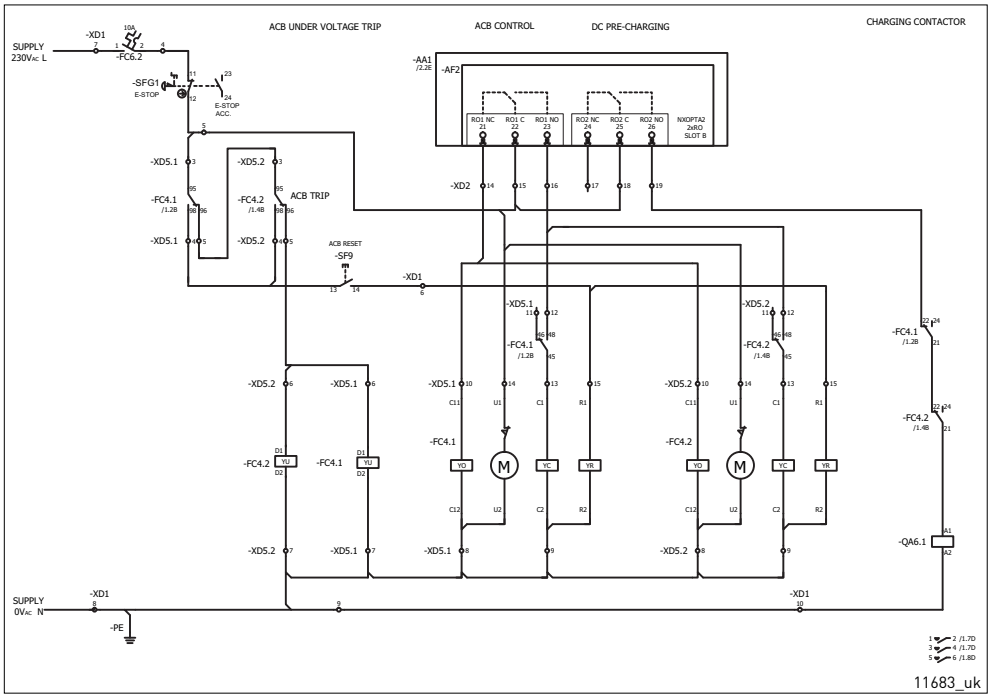

Figure 119. Wiring diagram for controls, OPTA2

The NFE power unit, NXP Control and the external control accessories need external 24 V DC supply. A minimum of 2 A power is required to ensure proper operation. See the connection from circuit diagrams Figure 116 - Figure 119. The cable between the NXP control and the power unit has to be shielded and grounded using the cable clamp which is included in the delivery of the drive.

The main circuit breaker control requires typically external 230 V AC, and a minimum of 2 A.

11.3 INSTALLATION OF THE NFE CONTROL CABLES

A 24 V DC power supply for fans, fan feedback signals and PT100 temperature sensor must be connected to the X100 connector at the NFE module.

1	Remove the protective cover to reveal the X100-connector on the power unit. 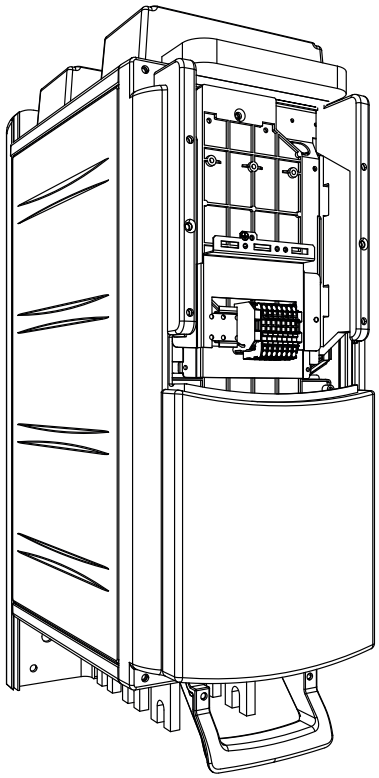 11712_00
2	Connect the wires as shown in Figure 118. The 24 V DC fans require minimum 1 A current capacity. Route the cables into the NFE power unit on the top of unit.
3	Using the cable clamp (1) included in the delivery of the drive, ground the shield of the cable between the NXP control and the power unit. 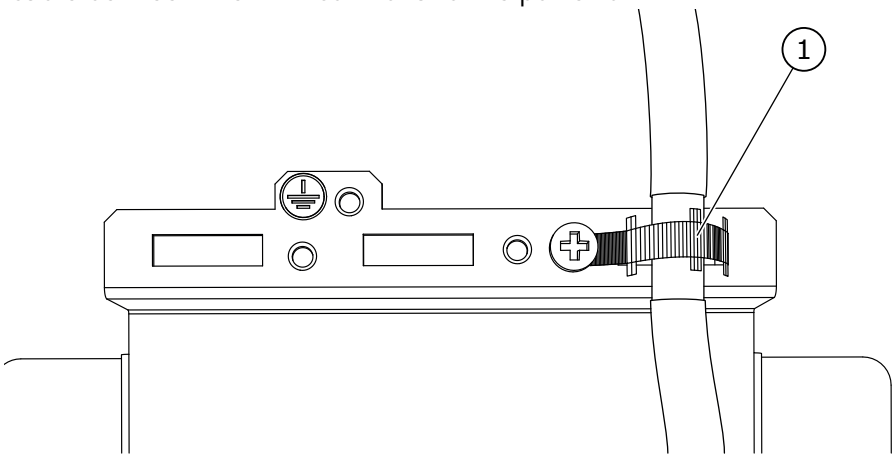 11711_00
4	Close the protective cover.

11.4 TYPE CODES

In the VACON type code, the Non-regenerative Front End is characterized by the characters **NXN**. The codes are given below:

NXN	2000	6	A	0	T	0	UWV	A1A2BHB100	without chokes
NXN	2000	6	A	0	T	0	TWV	A1A2BHB100	with external air-cooled chokes
NXN	2000	6	A	0	T	0	WWV	A1A2BHB100	with external liquid-cooled chokes

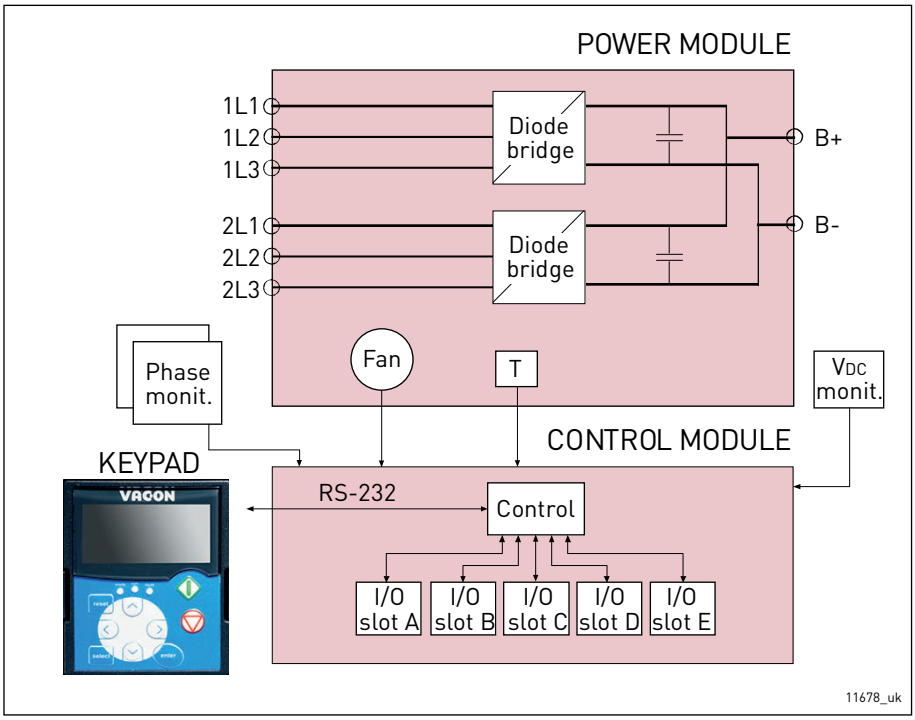

Figure 120. Non-regenerative front end block diagram

11.5 POWER RATINGS

Table 73. VACON® NXN Liquid-cooled non regenerative front-end, DC-bus voltage 465-800 V DC

AC drive type	AC current			DC power				Power loss c/a/T*) [kW]	Chassis
	Thermal I_{th} [A]	Rated I_L [A]	Rated I_H [A]	400 V AC mains I_{th} [kW]	500 V AC mains I_{th} [kW]	400 V AC mains I_L [kW]	500 VAC mains I_L [kW]		
NXN20006A0T0	2000	1818	1333	1282	1605	1165	1458	5.7/0.5/6.2	CH60

Table 74. VACON® NXN Liquid-cooled non regenerative front-end, DC-bus voltage 640-1100 V DC

AC drive type	AC current			DC power				Power loss c/a/T*) [kW]	Chassis
	Thermal I_{th} [A]	Rated I_L [A]	Rated I_H [A]	525 V AC mains I_{th} [kW]	690 V AC mains I_{th} [kW]	525 V AC mains I_L [kW]	690 V AC mains I_L [kW]		
NXN20006A0T0	2000	1818	1333	1685	2215	1531	2014	5.7/0.5/6.2	CH60

11.6 NON-REGENERATIVE FRONT END UNIT TECHNICAL DATA

Table 75. Technical data

Mains connection	Input voltage U_{in}	2 x 3ph 400–690 V AC (–10%...+10%);
	Input frequency	45...66 Hz
Output connection	Output voltage	U_{in} x 1.35
	Output frequency	DC voltage
	DC-link capacitance	4800 µF
Control characteristics	External NXP control	Run/Stop Control and supervision for external DC pre-charging circuit Control and supervision for external ACB's DC-voltage supervision Input phase and undervoltage supervision Choke temperature supervision Unit temperature supervision Fan operation supervision Optional current monitor
Current capacity	Input current	I_{th} 2 x 1000 A AC
	Output current	I_{th} 2400 A DC
	Overload	No overload
	Power losses	Power loss into coolant: 5.7 kW Power loss into air: 0.5 kW Power losses of the chokes: see Table 79.
Ambient conditions	Ambient operating temperature	–10 °C (no frost)...+50 °C (at I_{th}) The NX Liquid-cooled drives must be used in an heated indoor controlled environment.
	Installation temperature	0°C...+70 °C
	Storage temperature	–40 °C...+70 °C; No liquid in heat sink under 0 °C
	Relative humidity	5% to 96% RH, non-condensing, no dripping water
	Air quality: • Chemical fumes • Solid particles	IEC 60721-3-3 Edition 2.2, AC drive in operation, class 3C3 IEC 60721-3-3 Edition 2.2, AC drive in operation, class 3S2 No corrosive gases
	Altitude	400–500 V: 3000 m ASL; in case network is not corner grounded 500–690 V: maximum 2000 m ASL
	Vibration	5...150 Hz
	Shock EN 50178, EN 60068-2-27	UPS Drop Test (for applicable UPS weights) Storage and shipping: maximum 15 G, 11 ms (in package)
	Enclosure class	IP00 (UL open type) / Open
EMC	Immunity	Fulfils IEC/EN 61800-3 EMC immunity requirements.
	Emissions	EMC level N for TN/TT networks EMC level T for IT networks

Table 75. Technical data

Safety		IEC/EN 61800-5-1 IEC/EN 60204-1 as relevant, (see unit nameplate for more details)
Approvals	Type tested	CE, cULus
	Type approval	
Liquid cooling	Allowed coolants	Demineralized water or pure water with the quality specified in Chapter 5.2.3.1. Ethylene glycol • DOWCAL 100 • Clariant Antifrogen N Propylene glycol • DOWCAL 200 • Clariant Antifrogen L
	Volume	See Table 15.
	Temperature of coolant	0 °C...43 °C input (I_{th}); 43 °C...55 °C, contact your local distributor for further information Maximum temperature rise during circulation: 5 °C No condensation allowed. See Chapter 5.2.6.
	Coolant flow rates	See Chapter 5.2.4.3.
	System maximum working pressure	6 bar
	System maximum peak pressure	30 bar
	Pressure loss (at nominal flow)	Varies according to size. See Chapter 5.2.5.2.
Protections		Undervoltage, overvoltage, mains supervision, unit undertemperature, overtemperature, cooling fan operation, ACB operation, DC pre-charging operation, choke temperature

11.7 DIMENSIONS

Table 76. Non-regenerative front-end unit dimensions

Chassis	Width [mm]	Height [mm]	Depth [mm]	Weight [kg]
CH60	246	673	374	55

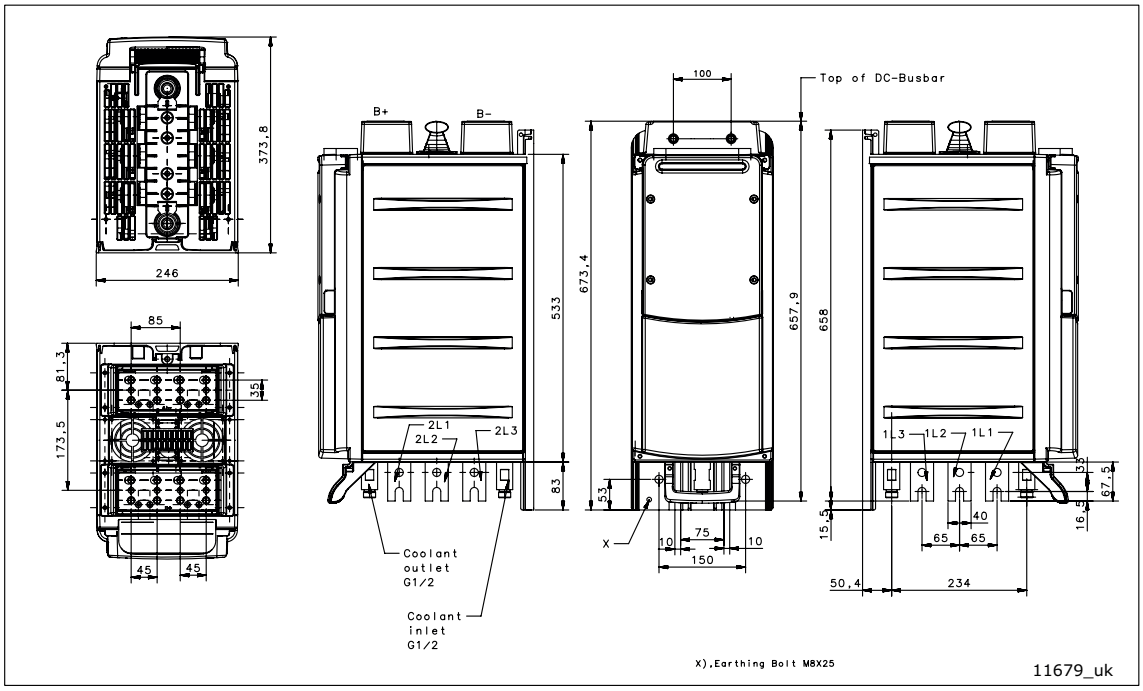

Figure 121. VACON® Liquid-cooled Non-regenerative front end, CH60

Table 77. Terminal connection

Chassis	Ground terminal (mm^2)	Ground terminal Bolt size	Main terminal Bolt size per phase	DC terminal Bolt size per polarity
CH60	25-185	M8	2 x M12	8 x M12

Table 78. Tightening torque of bolts

Bolt	Torque (Nm)	Maximum inward length (mm)
Grounding bolt	13.5	-
M12	70	22

11.8 CHOKES

Table 79. Type and dimensions for chokes

Choke type	Width [mm]	Height [mm]	Depth [mm]	Weight [kg]	Losses to air* [W]	Losses to coolant [W]*	Cooling
CHK1030N6A0	497	677	307	213	1840	0	Air
CHK-1030-6-DL	450	642	274	119	777	1073	Liquid

* Losses for one choke. Two chokes are needed for each L/C NFE, so total losses are 2x1.17 kW.

NOTE! If you use other chokes than the recommended ones, contact your nearest distributor to ensure compatibility.

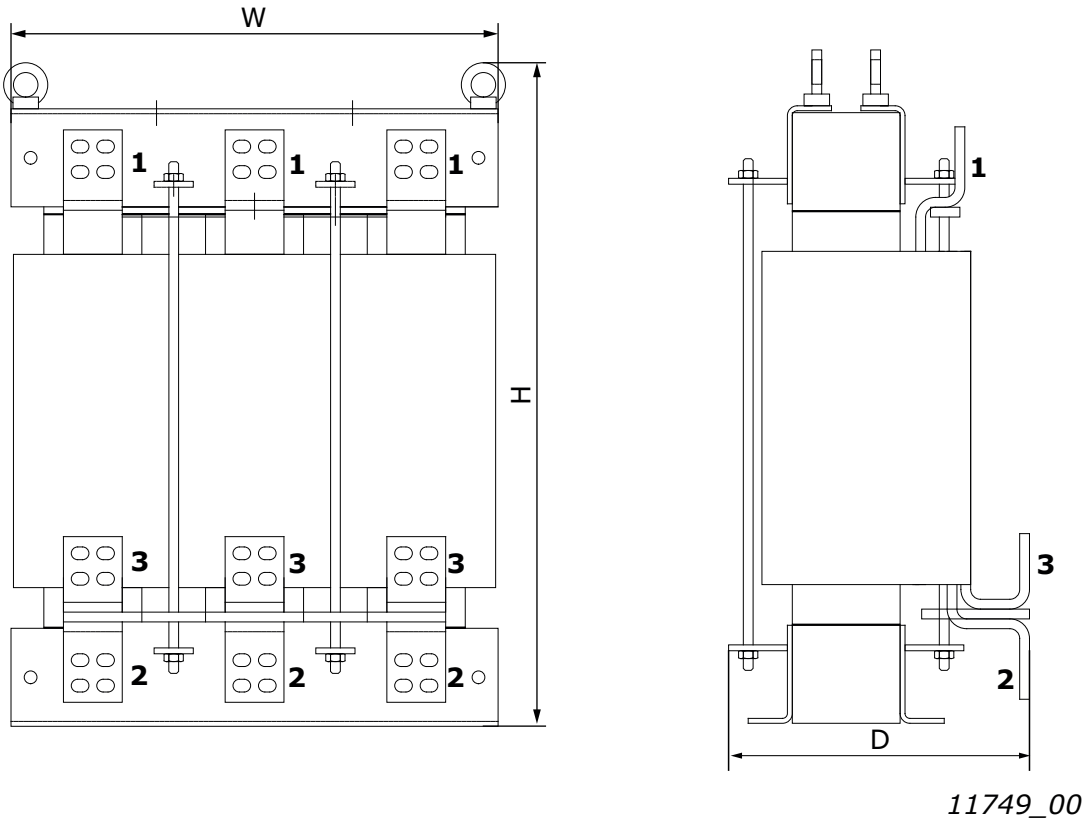

Figure 122. Example of CHK1030N6A0 choke

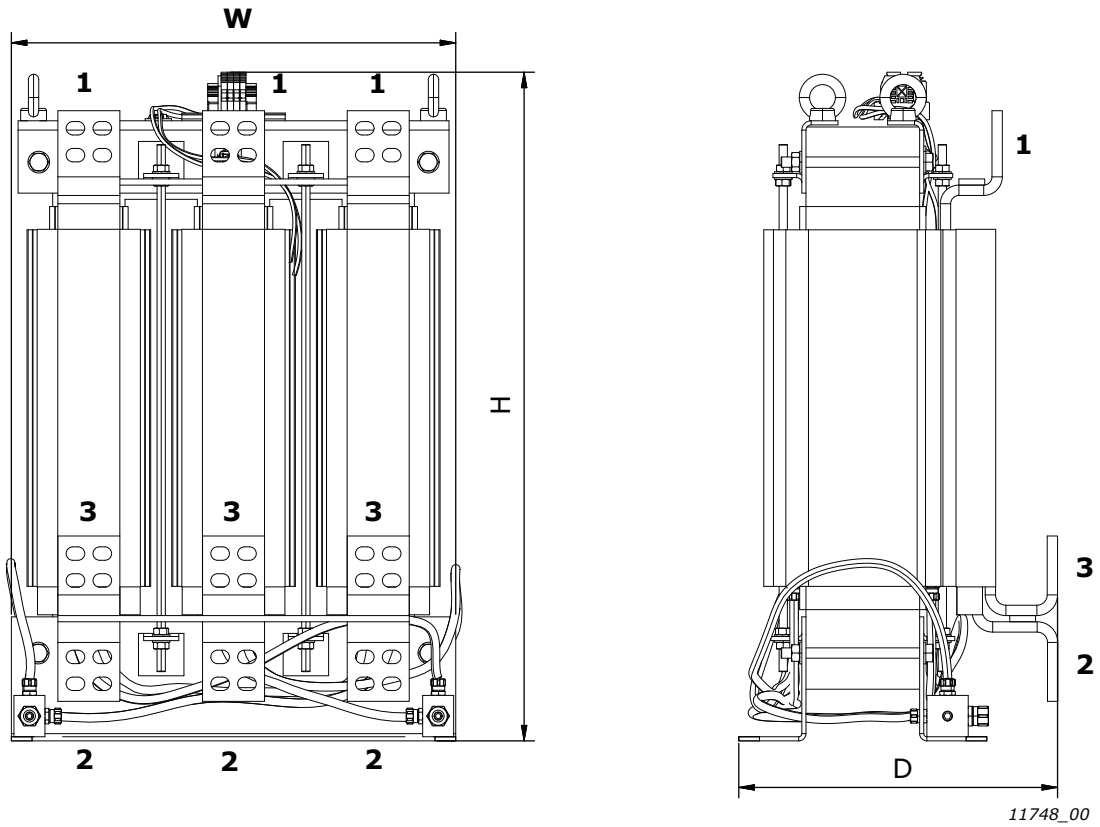

Figure 123. Example of FLU-CHK-1030-6-DL choke

Coolant connector Festo CK-3/8-PK-9.

Table 80.

Supply voltage	AC drive connection (terminal no.)
400-480 V AC	2
500 V AC	3
525-690 V AC	3

11.9 NON-REGENERATIVE FRONT END - FUSE SELECTION

AC fuses are used to protect the input network in case the Non-regenerative Front End unit or the choke is faulty. DC fuses are used to protect the Non-regenerative Front End unit and the choke in case there is a short circuit in the DC buses. If DC fuses are not used, short-circuit in the DC buses will cause a loading of the Non-regenerative Front End unit. Vacon Ltd will not assume any responsibility for damages caused by insufficient protection. **The warranty becomes void if the drive is not equipped with appropriate fuses.**

To ensure fuse performance, make sure that the available supply short circuit current is sufficient. See the minimum required short circuit current ($I_{cp,mr}$) in the fuse tables.

Main circuit breakers are used to protect chokes and Non-regenerative Front End units from overloading and unbalanced loading. Therefore, both rectifier bridges must be equipped with individual circuit breakers, see Figure 116.

Fuse information

The values in tables are based on maximum ambient temperature of +50 °C.

The required AC fuse type for the non-regenerative front end unit can be found from Table 81. The required DC fuse type for the non-regenerative front end unit can be found from Table 82.

11.9.1 Fuse sizes, Non-regenerative Front End units

Table 81. AC Fuse sizes for VACON® NX NFE units

Chassis	Code	Fuse, Mersen	Min. short circuit current $I_{cp,mr}$ [A]	U_N [V]	I_N [A]	Size	Bolts	Qty.
CH60	NXN 2000 6	PC233UD69V16CTF/ F300270A	12000	690	1600	2x33	M12	6

Table 82. DC Fuse sizes for VACON® NX NFE units

Chassis	Code	Fuse, Mersen	U_N [V]	I_N [A]	Size	Bolts	Qty.
CH60	NXN 2000 6	PC87UD11C38CP50 / K302988A	1050	3800	284	M12	2

11.9.2 Circuit breaker settings, Non-regenerative Front End units

Table 83. Circuit breaker settings for VACON® NX NFE units

Type	Code	Type, ABB	Qty.	L		I	N
				I1	t1	I3	InN
NFE	NXN 2000 6	X1N16FF3PR331LI	2	0.625	3s	1.5	50%
		X1N12FF3PR331LI	2	0.825	3s	1.5	50%
		X1N10FF3PR331LI	2	1.000	3s	1.5	50%

NOTE! If other circuit breakers are used, the overload and short circuit characteristics must be similar than those of the circuit breakers mentioned above. Overload I_N = 1000 A AC/3 s, instantaneous short-circuit I = 1500 A AC. Note that IEC, UL and other related approvals may be required. For UL enclosures, use UL Listed Breakers with category code PAQX or DIVQ.

11.10 Settings

11.10.1 Phase monitor settings

The option boards and phase monitor relays have settings that you may need to adjust. For settings of software application parameters, see Chapter 11.13.

The phase monitor relays (PMR1.1 and PMR1.2) have functions to detect under voltage, phase sequence and phase failure. All of those have to be correct so that the power unit is powered correctly and stays in run mode. If any of them is not correct, the phase monitor relay's output does not activate and the control unit gives an input phase fault.

1. **"U" Green LED: Supply voltage**
   - LED ON: Supply voltage present
2. **"MIN" Red LED: Lower threshold value (under voltage)**
   - LED flashes: Set threshold value exceeded, set delay time is running
   - LED ON: Set threshold value exceeded, delay time has elapsed
3. **"SEQ" Red LED: Phase failure/phase sequence**
   - LED flashing: phase has failed, set delay time is running
   - LED on: phase has failed, delay time has elapsed
4. **"REL" yellow LED: Output relay**
   - LED ON: Output relay has picked up (OK)
   - LED OFF: Output relay has dropped out (Fail)
5. **"Delay" potentiometer: response delay**
   - 400-690 V AC: 0.1s
6. **"MIN" potentiometer: Lower threshold value**
   - 400-500 V AC: ⩾ 360 V AC
   - 500-690 V AC: ⩾ 450 V AC

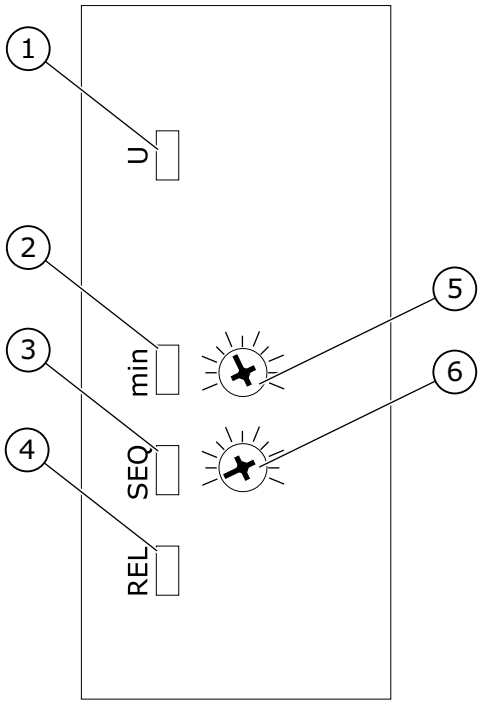

11684_00

11.10.2 OPTION BOARD SETTINGS

The option boards have jumpers which you may need to set according to the external wiring and connections. See the VACON® NX I/O Board User manual for settings.

The option board slots A–D are fixed. The slot E can be configured.

11.11 DC PRE-CHARGING CIRCUIT

Each Non-regenerative Front End unit requires its own external pre-charging circuit. The purpose of the pre-charging unit is to charge the voltage in the intermediate circuit to a level sufficient for connecting the Non-regenerative Front End unit to the mains. The charging time depends on the capacitance of the intermediate circuit of the total common DC-bus system and the resistance of the charging resistors. The technical specifications of manufacturer's standard pre-charging circuits are shown in Table 84. The pre-charging circuits are suitable for 400-500 V AC and 525-690 V AC.

The pre-charging duration and DC-voltage level are monitored by the NXP control. The DC-voltage level must be over 40 V DC after 1 second charging and final pre-charging voltage level must be reached within the maximum charging time. If these conditions are not reached, a charging fault is issued. The maximum charging time can be set by a parameter.

The pre-charging components can be ordered separately. The pre-charging circuit includes the following components: 2 pcs charging resistors, the contactor, the diode bridge and the snubber capacitor, see Table 85. Each pre-charging circuit has maximum charging capacity, see Table 84. If the capacitance of the intermediate circuit in the total system exceeds the values shown, contact your nearest distributor.

Table 84. Capacitance minimum and maximum value for pre-charging circuit

Pre charging type	Resistance	Capacitance minimum	Capacitance maximum
CHARGING-AFE-FFE-FI9	2 x 47 R	4950 µF	30000 µF
CHARGING-AFE-FFE-FI10	2 x 20 R	9900 µF	70000 µF
CHARGING-AFE-FFE-FI13	2 x 11 R	29700 µF	128000 µF

Table 85. Pre-charging components configuration FI9 AFE / CHARGING-AFE-FFE-FI9

Item	Quantity	Description	Manufacturer	Product Code
1	1	Diode Bridge	Semikron	SKD 82
2	2	Charging resistors	Danotherm	CAV150C47R
3	1	Snubber capacitor	Rifa	PHE448
4	1	Contactor	Telemecanique	LC1D32P7

Table 86. Pre-charging components configuration FI10 AFE / CHARGING-AFE-FFE-FI10

Item	Quantity	Description	Manufacturer	Product Code
1	1	Diode Bridge	Semikron	SKD 82
2	2	Charging resistors	Danotherm	CBV335C20R
3	1	Snubber capacitor	Rifa	PHE448
4	1	Contactor	Telemecanique	LC1D32P7

Table 87. Pre-charging components configuration FI13 AFE / CHARGING-AFE-FFE-FI13

Item	Quantity	Description	Manufacturer	Product Code
1	1	Diode Bridge	Semikron	SKD 82
2	2	Charging resistors	Danotherm	CBV335C11R
3	1	Snubber capacitor	Rifa	PHE448
4	1	Contactor	Telemecanique	LC1D32P7

The Non-regenerative Front End unit must not be connected to mains without pre-charging. In order to ensure the correct operation of the pre-charging circuit, the input circuit-breaker and the pre-charging circuit contactor must be controlled by the Non-regenerative Front End unit. The input circuit-breaker and the pre-charging circuit contactor must be connected as shown in Chapter 11.2.1.

NOTE! You need to double-insulate all wirings that do not have short circuit protections and are used for connecting the pre-charging circuit to the intermediate circuit.

NOTE! Enough space must be reserved around the resistors to ensure sufficient cooling. Do not place any heat sensitive components near the resistors.

11.12 PARALLELING

The power of the input group can be increased by connecting several Non-Regenerative Front End units in parallel. Manufacturer's standard chokes must be used for parallel units. Use of other than these chokes in the Non-Regenerative Front End units connected in parallel may cause a too large current imbalance between the units.

Each Non-Regenerative Front End unit connected in parallel must have its own short-circuit protection on AC and DC sides and own circuit breakers in AC side. When paralleling, attention must be paid to the sufficient short-circuit capacity of the system.

The derating of Non-Regenerative Front End units connected in parallel is 10% of the DC power; this should be taken into account when dimensioning the system.

If a device is to be isolated from the AC and DC voltages, and other Non-Regenerative Front End units connected in parallel are also to be used, separate isolators are required in the AC input and DC output. The AC input can be isolated using a circuit-breaker or a fuse switch. Contactors are not suitable for isolating the AC input because they cannot be locked in a safe position. The DC output can be isolated using a proper load switch. The pre-charging circuit must also be isolated from the AC input by using fuse switch. The device can also be connected to mains even when the other devices connected in parallel are already connected and running. In such a case, the isolated device must first be pre-charged. When that is done, the AC input can be switched on. After this, the device can be connected to the intermediate DC circuit.

11.13 PARAMETERS

The parameters for software version ANCNQ100 are described below.

Table 88. Monitoring values

Code	Parameter	Min	Max	Unit	Default	ID	Desciption
V1.2.1	DC Voltage	0	1500	V	0	7	DC voltage measured by external AI devices
V1.2.2	Current	0	5000	A	0	3	Current measured by external AI devices
V1.2.3	Unit Temperature	-30.0	200.0	deg	0.0	8	Heatsink temp measured by PT100 signal
V1.2.4	Choke Temp 1	-30.0	200.0	deg	0.0	50	Choke temp 1 measured by PT100
V1.2.5	Choke Temp 2	-30.0	200.0	deg	0.0	51	Choke temp 2 measured by second PT100
V1.2.6	Status Word	0	65535		0	43	B0 =PrechargeReady B1 =MC RUN B2 =MC Warning B3 =MC Fault B4 =DIN Run B5 =DIN BreakerFeedback B6 =DIN MissInputPhase B7 =DIN ChokeTempFault B8 =DIN Reset B9 =DOUT DC Precharging B10=DOUT Close MCB B11=DIN Cooling Fan B12=DIN Cooling Fan2 Bit13=DIN External Fault Close Bit14=DIN E Stop Bit15=DIN Cooling OK
V1.2.7	Hour Counter	0	65535	Hour	0	1909	Run Hour counter

Table 89. Basic parameters G2.1

Code	Parameter	Min	Max	Unit	Default	ID	Desciption
P2.1.1	Main Voltage	400	690	V	690	1910	Main supply voltage from network
P2.1.2	PreChargReadyLev	20	100	%	80	1911	Precharge ready level
P2.1.3	MaxChargeTime	0.00	30.00	s	5.00	1912	Max charge time. If the charging time is more than this, a fault will generated
P2.1.4	Password	0	65535		0	1913	Password

Table 90. Digital input G2.2.1

Code	Parameter	Min	Max	Unit	Default	ID	Desciption
P2.2.1.1	Run	0	59		10	1915	Select Digital input signal for Run command

Table 90. Digital input G2.2.1

Code	Parameter	Min	Max	Unit	Default	ID	Desciption
P2.2.1.2	BreakerFeedback	0	59		11	1916	Select digital input signal for Breaker Feedback
P2.2.1.3	Miss Input Phase	0	59		12	1917	Select digital input for missing input phase or low input voltage
P2.2.1.4	External Fault	0	59		13	1918	Select for digital input signal external fault ,normal open logic
P2.2.1.5	Choke Temp	0	59		14	1919	Select for digital input Choke Temp
P2.2.1.6	Fault Reset	0	59		15	1920	Select for digital input signal fault reset
P2.2.1.7	E Stop	0	59		42	1921	Select for digital input signal E-stop feedback
P2.2.1.8	Cooling OK	0	59		43	1922	Select for digital input signal liquid cooling feedback
P2.2.1.9	Fan Sensor 1	0	59		44	1923	Select for digital input signal cooling fan monitor
P2.2.1.10	Fan Sensor 2	0	59		45	1924	Selection of fan sensor2 from digital input signal, default is from OPT-B1 DIN.D5

Table 91. Analog input G2.2.2

Code	Parameter	Min	Max	Unit	Default	ID	Desciption
P2.2.2.1	DC Voltage	0	59		10	1925	Selection for analog input of dc voltage
P2.2.2.2	DC Min Point	0.00	40.00	%	20.00	1926	Percent value corresponds to 0 dc voltage
P2.2.2.3	Max DC Voltage	500	2000	V	1500	1927	Dc voltage measurement devices max range
P2.2.2.4	Current	0	59		11	1928	Selection of analog input signal input current
P2.2.2.5	Current MinPoint	0.00	100.00	%	0.00	1929	Analog input signal min point for current measurement
P2.2.2.6	Max Current	0	32000	A	1000	1930	Max current corresponds to max analog input 100.00%
P2.2.2.7	Unit Temp	0	59		30	1931	Selection of analog input for heatsink Temp
P2.2.2.8	Choke Temp 1	0	59		31	1932	Select analog input signal for choke temp 1 from pt100 signal
P2.2.2.9	Choke Temp 2	0	59		32	1933	Select analog input signal for choke temp 2 from PT100 signal

Table 92. Digital Output G2.3.1

Code	Parameter	Min	Max	Unit	Default	ID	Desciption
P2.3.1.1	Running	0	59		10	1935	Select for digital output signal MC running
P2.3.1.2	Close MCB	0	59		20	1936	Selection for digital output close Main circuit breaker
P2.3.1.3	DC Precharge	0	59		21	1937	Selection digital output signal for DC Precharging signal
P2.3.1.4	Warning	0	59		40	1938	Select for digital output signal mc warning
P2.3.1.5	Fault	0	59		41	1939	Selection for digital output sigal mc fault
P2.3.1.6	No Warning	0	59		0	1940	Inverted warning signal
P2.3.1.6	No Fault	0	59		0	1941	Inverted fault signal

Table 93. Analog Output G2.3.2

Code	Parameter	Min	Max	Unit	Default	ID	Desciption
P2.3.2.1	DC Voltage	0	59		10	1942	Selection for analog output signal dc voltage
P2.3.2.2	Current	0	59		0	1943	Selection for analog output signal for current

Table 94. Protection G2.4

Code	Parameter	Min	Max	Unit	Default	ID	Desciption
P2.4.1	CoolFanFaultMode	1	2		1	1945	Cooling Fan Fault Mode 1=Warning + Fault(after delay) 2=Fault
P2.4.2	Fan Fault Delay	0	15	min	5	1946	The delay time after which a cooling fan fault will generate. Until the delay time is finished, only a warning is on.
P2.4.3	MissPhaseFautMod	0	2		2	1947	Miss input phase fault response mode 0=no action 1=Warning 2=Fault
P2.4.4	MissPhaseFDelay	0.00	60.00	s	1.00	1948	Missing phase signal wait time
P2.4.5	BreakerFaultMode	0	2		2	1949	MCB feedback signal is missing after settled time 0=No action 1=Warning 2=Fault
P2.4.6	Breaker Ack Time	0.00	10.00	s	1.00	1950	Breaker feedback signal wait time

Table 94. Protection G2.4

Code	Parameter	Min	Max	Unit	Default	ID	Desciption
P2.4.7	ChokeTempFauMode	0	3		1	1951	Response to Choke Temp mode when Temp measurement is using digital input (DI)signals or PT100 signal 0=No action (DI) 1=Warn + Fault (after delay) (DI) 2=Fault (DI) 3=PT100
P2.4.8	ChokeOTFaultDela	0	30	min	5	1952	When choke temp fault mode=1, after this time, warning will be changed to fault
P2.4.9	ChokeOTWarnLevel	-30.0	200.0	deg	110.0	1953	Choke temp using pt100. If temp is over this limit, a warning will generate
P2.4.10	ChokeOTFaultLeve	-30.0	200.0	deg	130.0	1954	Choke temp using pt100. If temp is over this limit, a fault will generate
P2.4.11	Ext Fault Mode	0	4		0	1955	External fault mode selection 0=No action 1=Warnng + Fault(after delay) 2=Fault 3=Inv Warning+ Fault(after delay) 4=Inv Fault
P2.4.12	Ext Fault Delay	0	600	min	0	1956	The Delay Time for triggering an external fault after an external warning is active.
P2.4.13	CoolingFaultMode	0	4		0	1957	Fault mode selection for liquid cooling fault from digital input signal 0= No action 1= Warning + Fault(after delayed) 2= Fault 3= Inv Warning + Fault (after delay) 4= Inv Fault
P2.4.14	CoolingFaultDela	0	3600	s	1	1958	A delay time for triggering a liquid fault after liquid warning is active
P2.4.15	E Stop Mode	0	4		0	1959	E stop mode selection 0=No action 1=Warning, ditial input goes to TRUE 2=Fault, digital input goes to TRUE 3=Inv Warning, digital input goes to FALSE 4=Inv Fault, digital input goes to FALSE

Table 95. Fieldbus G2.5

Code	Parameter	Min	Max	Unit	Default	ID	Desciption
P2.5.1	Process Data IN1	0	10000		0	876	
P2.5.2	Process Data IN2	0	10000		0	877	
P2.5.3	Process Data IN3	0	10000		0	878	
P2.5.4	Process Data IN4	0	10000		0	879	
P2.5.5	Process Data IN5	0	10000		0	880	
P2.5.6	Process Data IN6	0	10000		0	881	
P2.5.7	Process Data IN7	0	10000		0	882	
P2.5.8	Process Data IN8	0	10000		0	883	
P2.5.9	ProcessData Out1	0	10000		0	852	
P2.5.10	ProcessData Out2	0	10000		0	853	
P2.5.11	ProcessData Out3	0	10000		0	854	
P2.5.12	ProcessData Out4	0	10000		0	855	
P2.5.13	ProcessData Out5	0	10000		0	856	
P2.5.14	ProcessData Out6	0	10000		0	857	
P2.5.15	ProcessData Out7	0	10000		0	858	
P2.5.16	ProcessData Out8	0	10000		0	859	

Table 96. Advanced par G2.6

Code	Parameter	Min	Max	Unit	Default	ID	Desciption
P2.6.1	OT Alarm Level	-30.0	55.0	deg	55.0	1961	If CH62 PT100 sensor is over this level, alarm will generated
P2.6.2	Fan Type	1	2		2	1962	Cooling fan type selection 1=fan sensor is status sinal, if signal is low, fault will generate 2=also status signal, fan sensor signal is inverted, if signal is high, fault will generate
P2.6.3	Run Start	0	1		0	1963	Start mode selection 0=Rising Edge, run command need rising edge to restart the system 1=Auto Start, run command active, system will auto restart

Table 97. OPT-BH parameters G7.3

Code	Parameter	Min	Max	Unit	Default	ID	Desciption
7.3.1.1	Sensor 1 type	0	6		0		0=No Sensor **1=PT100** 2=PT1000 3=Ni1000 4=KTY84 5=2 x PT100 6=3 x PT100
7.3.1.2	Sensor 2 type	0	6		0		See above
7.3.1.3	Sensor 3 type	0	6		0		See above

NFE's internal temperature sensor is PT100. Set 7.3.1.1 = 1.

11.14 CH60 LIQUID-COOLED NFE PROTECTIONS

The protections for software version ANCNQ100 are described below.

Table 98. Voltage protections

Main voltage P2.1.1	400 V AC ≤ P2.1.1 ≤ 500 V AC	500 V AC < P2.1.1 ≤ 690 V AC
Under voltage trip	333 V DC	573 V DC
Under voltage alarm	371 V DC	633 V DC
Over voltage alarm	830 V DC	1150 V DC
Over voltage trip	911 V DC	1250 V DC

Table 99. Unit temperature protections

Unit temperature	V1.2.3
Under temp. trip	-10 °C
Over temp. alarm (*1)	55 °C
Over temp. trip	60 °C

(*1) Temperature level may be changed by a parameter

Table 100. Choke temperature protections

Choke temperature	V1.2.4 & V1.2.5
Over temp. alarm (*2)	110 °C
Over temp. trip (*2)	130 °C

(*2) Chokes require PT100 sensors. Temperature levels may be changed by parameters

11.15 FAULT CODES

When a fault is detected by the NFE control electronics, the drive is **stopped** and main circuit breakers and the charging switch is controlled into open state, which will then disconnect the NFE module from the mains supply. The fault can be reset with the Reset button on the control keypad or via the I/O terminal. Resetting the faults will clear the fault and initiate new start-up procedure of the NFE unit. The faults are stored in the Fault history menu (M5) which can be browsed. The different fault codes you will find in the table below.

The fault codes, their causes and correcting actions for software version ANCNQ100 are presented in the table below.

Table 101. Fault codes

Fault code	Fault	Possible cause	Correcting measures
2	Overvoltage	The DC-link voltage has exceeded the limits. - Too short a deceleration time - High overvoltage spikes in supply Fault: - 911 V DC, Main Voltage P2.1.1 400-500 V AC - 1250 V DC, Main Voltage P2.1.1 500-690 V AC Warning: - 860 V DC, Main Voltage P2.1.1 400-500 V AC - 1150 V DC, Main Voltage P2.1.1 500-690 V AC	• Set deceleration time longer. • Use brake chopper or brake resistor (available as options). • Set over voltage control active with INU devices. • Check input voltage.
4	Charging fault	The pre-set charging time (defined by MaxChargeTime parameter P.2.1.3, default: 5 s) has been exceeded. DC voltage must rise above 40 V DC in 1 second	• Check the external charging circuit & charging resistor dimensioning • Check P.2.1.3 MaxChargeTime
9	UnderVoltage	The DC-link voltage has decreased under the limits defined. - Too low supply voltage. - Component failure. - Defect input fuse. - External charge switch not closed. Fault: - 333 V DC; Main Voltage P2.1.1 400-500 V AC - 573 V DC; Main Voltage P2.1.1 500-690 V AC Warning: - 371 V DC; Main Voltage P2.1.1 400-500 V AC - 633 V DC; Main Voltage P2.1.1 500-690 V AC	• If there is a temporary supply voltage break, RESET the fault and RESTART the drive. • Check the supply voltage. If the measured value is sufficient, internal failure has occurred. • Check the electrical network, if any breaks occur. • If the fault re-occurs, contact your local/ nearest service center or distributor. Report carefully all the used software, application and all options.

Table 101. Fault codes

Fault code	Fault	Possible cause	Correcting measures
10	Input phase	External electronic monitoring relay have detected undervoltage, phase sequence or phase failure issue. • Minimum threshold value: 360 V AC for 400-500 V AC supply voltage • Minimum threshold value: 470 V AC for 525-690 V AC supply voltage • Response delay is set to be 0.1 s Various causes: - Supply phase failure - Supply fuse failure - Incorrect Mains cabling - Grid interruption	Check EMD relay settings, Signal wiring, supply voltage, fuses, supply cable, rectifying bridge.
13	Undertemperature	Power module heat sink temperature is under –10 °C.	Power module is in a too cold place or coolant agent is too cold. Check the ambient and coolant temperature. Check the signal wiring.
14	Overtemperature	Fault: Power module heat sink temperature is over 60 °C. Warning: Power module heat sink temperature is over 55 °C.	• Check Coolant flow and temperature • Check the ambient temperature. • Check the cooling fan condition • Check the power module loading • Check the signal wiring
32	Fan cooling	Jammed cooling fan - Cooling Fan failure - Cooling Fan is not rotating	• Check the signal wiring • Change the cooling fans
51	Ext Fault	External fault digital input have triggered the fault	• Check the signal wiring • Check External Fault input
56	Choke Temp	Over temperature switch feedback or Fault: The temperature of the external input AC choke is over 130 °C (measured from PT100 thermistor). Warning: The temperature of the external input AC choke is over 110 °C. (measured from PT100 thermistor)	• Check input AC choke cooling conditions • Check the power module loading • Check the signal wiring

Table 101. Fault codes

Fault code	Fault	Possible cause	Correcting measures
60	Cooling	Cooling OK digital input for liquid cooling feedback have triggered the fault	• Check liquid cooling • Check the signal wiring • Check Cooling OK input
63	EmergencyStop	E-stop digital input for emergency stop feedback have triggered the fault	• Check Main Circuit Breaker functionality • Check signal wiring
64	Breaker Trip	MCBs Feedback signal missing after settled time defined with parameter Breaker Ack Time P2.4.6.	• Check Main Circuit Breaker functionality • Check signal wiring

12. BRAKE CHOPPER UNIT (BCU)

12.1 INTRODUCTION

The VACON® NXB (Brake chopper unit) is a unidirectional power converter for the supply of excessive energy from a common DC bus drive line-up to resistors where the energy is dissipated as heat. External resistors are needed. The NXB improves the DC-link voltage controllability as well as enhances the motor drives performance in dynamic applications.

Mechanically, the NXB module is based on inverter unit construction. The dynamic DC energy brake function is achieved through a specific NXB system software. Several NXB modules can be installed in parallel in order to increase the braking capacity, however, the modules require mutual synchronization.

12.2 TYPE CODE

In the VACON® type code, the Brake Chopper Unit is characterized by number 8, for example:

NXB	0300	5	A	0	T	0	**8**WF	A1A2000000

12.3 DIAGRAMS

12.3.1 NXB BRAKE CHOPPER UNIT BLOCK DIAGRAM

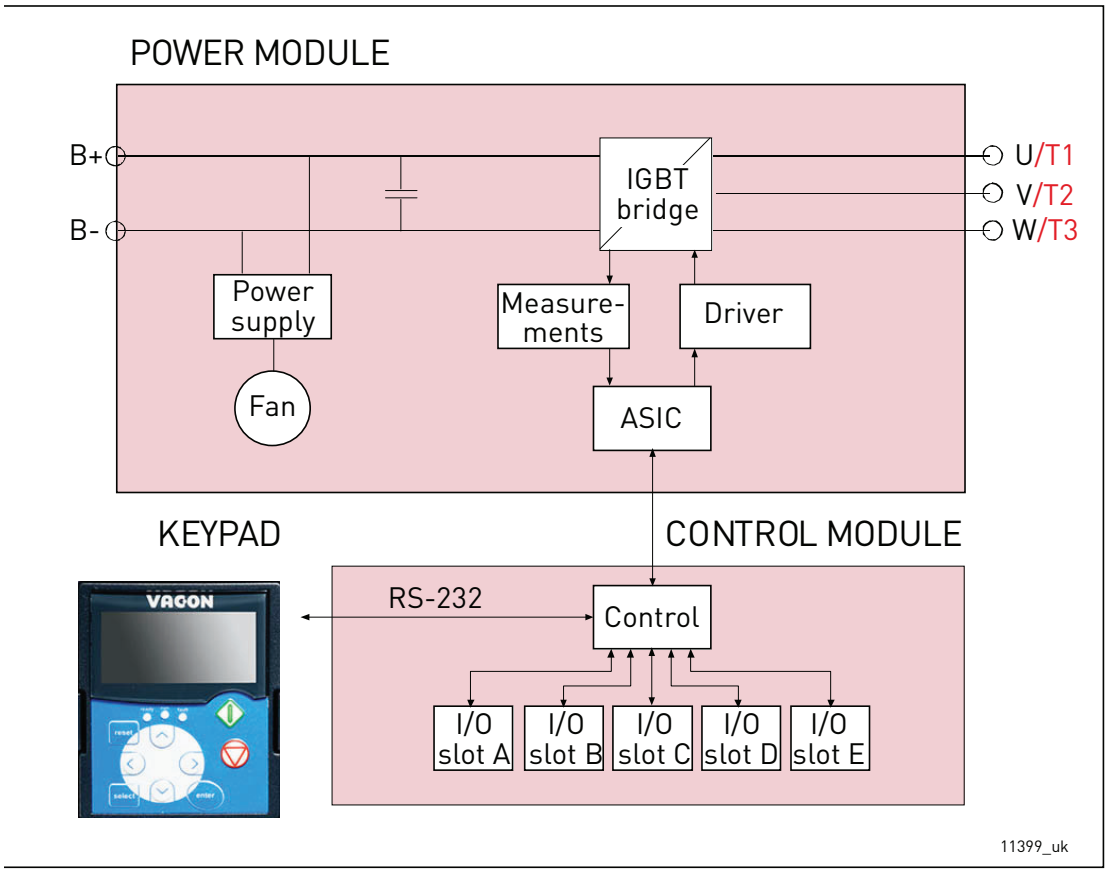

Figure 124. BCU block diagram

12.3.2 VACON® NXB TOPOLOGIES AND CONNECTION

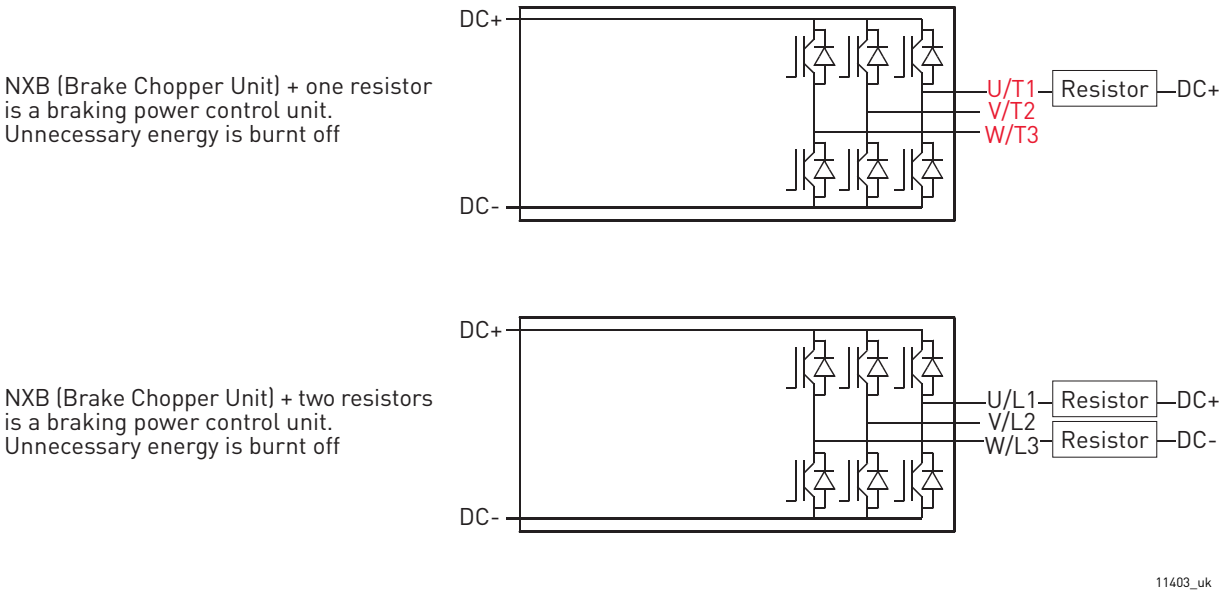

Figure 125. Brake chopper unit topology

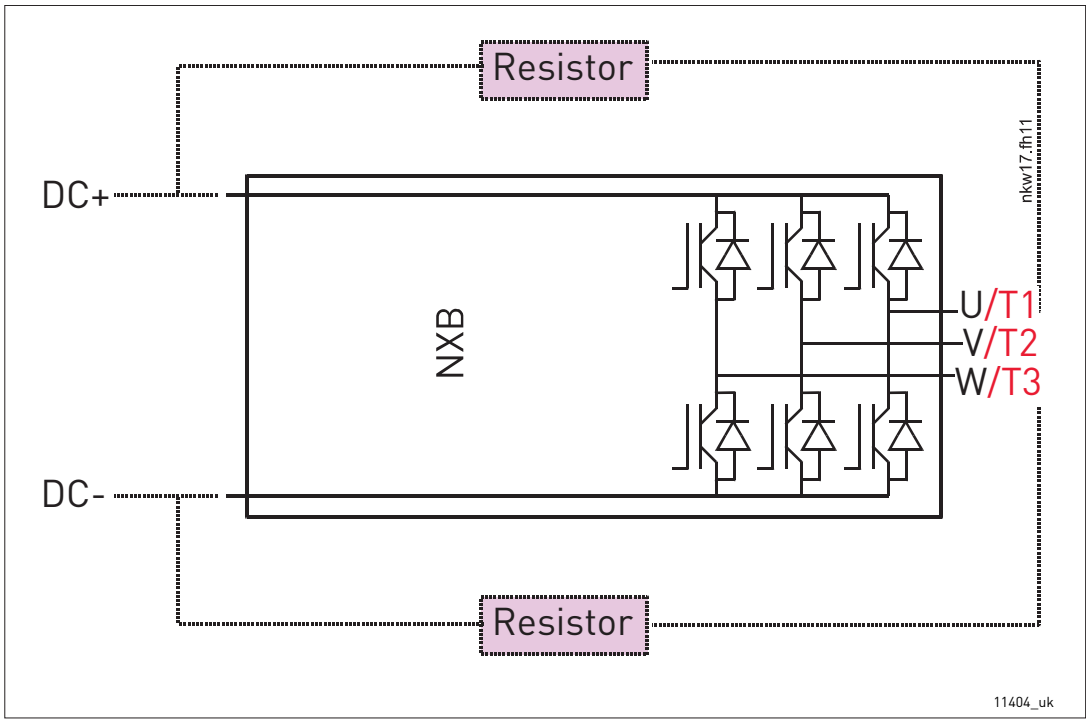

Figure 126. VACON® Brake Chopper Unit connections

12.4 BRAKE CHOPPER UNIT TECHNICAL DATA

NOTE: NX_8 AC drives are only available as Ch6x AFE/BCU/INU units.

Table 102. Technical specification for VACON® NXB Liquid-cooled brake chopper unit

Supply connection	Input voltage U_{in}	NX_5: 400–500 V AC (–10%...+10%); 465–800 V DC (–0%...+0%) NX_6: 525–690 V AC (–10%...+10%); 640–1100 V DC (–0%...+0%) NX_8: 525–690 V AC (–10%...+10%); 640–1136 V DC (–0%...+0%)
	Input current	DC I_{in} ~ I_{out}
	DC-link capacitance	Voltage class 500 V: Ch3 (16-31A units): 600 µF Ch3 (38-61A units): 2400 µF CH4: 2400 µF CH5: 7200 µF CH61: 10800 µF CH62: 10800 µF Voltage class 690 V: CH61: 4800 µF CH62: 4800 µF
	Starting delay	2–5 s
Resistor connection	Output voltage	U_{in} ~ U_{out}
	Continuous output current	I_{br}: Maximum ambient temperature +50 °C
	Connection order	R1 U – DC+ R2 W – DC-
Control characteristics	Control method	Voltage level control, default U_n+18%
	Parallel BCU	Requires synchronization
Ambient conditions	Ambient operating temperature	–10 °C (no frost)...+50 °C (at I_{th}) The VACON® NX Liquid-cooled drives must be used in a heated indoor controlled environment
	Installation temperature	0 °C...+70 °C
	Storage temperature	–40 °C...+70 °C; No liquid in heat sink under 0 °C
	Relative humidity	5% to 96% RH, non-condensing, no dripping water
	Air quality: • Chemical fumes • Solid particles	 IEC 60721-3-3 Edition 2.2, AC drive in operation, class 3C3 IEC 60721-3-3 Edition 2.2, AC drive in operation, class 3S2 No corrosive gases
	Altitude	NX_5 (380–500 V): maximum 3000 m (in case network is not corner grounded) NX_6: maximum 2000 m. For further requirements, contact factory 100-% load capacity (no derating) up to 1000 m; above 1000 m derating of maximum ambient operating temperature by 0.5 °C per each 100 m is required.

Table 102. Technical specification for VACON® NXB Liquid-cooled brake chopper unit

	Vibration EN 50178/EN 60068-2-6	5–150 Hz Displacement amplitude 0.25 mm (peak) at 3–31 Hz Max acceleration amplitude 1 G at 31–150 Hz
	Shock EN 50178, EN 60068-2-27	UPS Drop Test (for applicable UPS weights) Storage and shipping: maximum 15 G, 11 ms (in package)
	Cooling capacity required	See Table 13.
	Unit enclosure class	IP00 (UL open type) / Open Frame standard in entire kW / HP range
	Pollution degree	PD2
EMC	Immunity	Fulfils IEC/EN 61800-3 EMC immunity requirements
Safety		CE, UL, IEC/EN 61800-5-1 (2007) (see unit nameplate for more detailed approvals) IEC 60664-1 and UL840 in overvoltage category III.
Control connections	Analogue input voltage	0...+10 V, Ri = 200 kW, (–10 V...+10 V joystick control) Resolution 0.1%, accuracy ±1%
	Analogue input current	0(4)...20 mA, Ri = 250 W differential
	Digital inputs (6)	Positive or negative logic; 18–30 V DC
	Auxiliary voltage	+24 V, ±10%, maximum 250 mA
	Output reference voltage	+10 V, +3%, maximum load 10 mA
	Analogue output	0(4)...20 mA; RL maximum 500 W; Resolution 10 bit; Accuracy ±2%
	Digital outputs	Open collector output, 50 mA/48 V
	Relay outputs	2 programmable change-over relay outputs Switching capacity: 24 V DC/8 A, 250 V AC/8 A, 125 V DC/0.4 A Min. switching load: 5 V/10 mA

Table 102. Technical specification for VACON® NXB Liquid-cooled brake chopper unit

Protections	Overvoltage trip limit	NX_5: 911 V DC NX_6: (CH61, CH62, CH63, CH64): 1258 V DC NX_6: (Other chassis): 1200 V DC NX_8: (CH61, CH62, CH63, CH64): 1300 V DC
	Undervoltage trip limit	NX_5: 333 V DC NX_6: 461 V DC NX_8: 461 V DC
	Overcurrent protection	Yes
	Unit overtemperature protection	Yes
	Resistor overtemperature protection	Yes
	Wrong connection protection	Yes
	Short-circuit protection of +24 V and +10 V reference voltages	Yes
Liquid cooling	Allowed coolants	Demineralized water or pure water with the quality specified in Chapter 5.2.3.1. Ethylene glycol • DOWCAL 100 • Clariant Antifrogen N Propylene glycol • DOWCAL 200 • Clariant Antifrogen L
	Volume	See Table 15.
	Temperature of coolant	0...35 °C input (I_{th}); 35...55 °C: derating required, see Chapter 5.3. Maximum temperature rise during circulation: 5 °C No condensation allowed. See Chapter 5.2.6.
	Coolant flow rates	See Chapter 5.2.4.3.
	System maximum working pressure	6 bar
	System maximum peak pressure	30 bar
	Pressure loss (at nominal flow)	Varies according to size. See Chapter 5.2.5.2.

12.5 BCU POWER RATINGS

12.5.1 VACON® NXB; DC VOLTAGE 460–800 V

Table 103. Power ratings of VACON® NXB, supply voltage 460–800 Vdc

Braking voltage 460-800 VDC							
NXB type	Loadability				Braking capacity		Chassis
	BCU rated cont. braking current, I_{br} [A]	Rated min. resistance at 800 V DC [Ω]	Rated min. resistance at 600 V DC [Ω]	Rated max. input current [Adc]	Rated cont. braking power 2*R at 800 V DC [kW]*	Rated cont. braking power 2*R at 600 V DC [kW]**	
NXB_0031 5	2*31	25.7	19.5	62	49	37	CH3
NXB_0061 5	2*61	13.1	9.9	122	97	73	CH3
NXB_0087 5	2*87	9.2	7.0	174	138	105	CH4
NXB_0105 5	2*105	7.6	5.8	210	167	127	CH4
NXB_0140 5	2*140	5.7	4.3	280	223	169	CH4
NXB_0168 5	2*168	4.7	3.6	336	267	203	CH5
NXB_0205 5	2*205	3.9	3.0	410	326	248	CH5
NXB_0261 5	2*261	3.1	2.3	522	415	316	CH5
NXB_0300 5	2*300	2.7	2.0	600	477	363	CH61
NXB_0385 5	2*385	2.1	1.6	770	613	466	CH61
NXB_0460 5	2*460	1.7	1.3	920	732	556	CH62
NXB_0520 5	2*520	1.5	1.2	1040	828	629	CH62
NXB_0590 5	2*590	1.4	1.1	1180	939	714	CH62
NXB_0650 5	2*650	1.2	1.0	1300	1035	786	CH62
NXB_0730 5	2*730	1.1	0.9	1460	1162	833	CH62

*. 800 V DC equals U_{brake} at 500 V AC

**. 600 V DC equals U_{brake} at 380 V AC

For dimensions of BCU units, see Table 12.

NOTE! The rated currents in given ambient (+50 °C) and coolant (+30 °C) temperatures are achieved only when the switching frequency is equal to or less than the factory default.

NOTE! Braking power: $P_{brake} = 2*U_{brake}^2 / R_{brake}$

NOTE! Maximum input DC current: $I_{in\_max} = P_{brake\_max} / U_{brake}$

12.5.2 VACON® NXB; DC VOLTAGE 640–1100 V

Table 104. Power ratings of VACON® NXB, supply voltage 640–1100 V DC

Braking voltage 640-1100 VDC ***)							
	Loadability				Braking capacity		
NXB type	BCU rated cont. braking current, I_{br} [A]	Rated min. resistance at 1100 V DC [Ω]	Rated min. resistance at 840 V DC [Ω]	Rated max. input current [A DC]	Rated cont. braking power 2*R at 1100 V DC [kW]*	Rated cont. braking power 2*R at 840 V DC [kW]**	Chassis
NXB_0170 6	2*170	6.5	4.9	340	372	282	CH61
NXB_0208 6	2*208	5.3	4.0	416	456	346	CH61
NXB_0261 6	2*261	4.2	3.2	522	572	435	CH61
NXB_0325 6	2*325	3.4	2.6	650	713	542	CH62
NXB_0385 6	2*385	2.9	2.2	770	845	643	CH62
NXB_0416 6	2*416	2.6	2.0	832	913	693	CH62
NXB_0460 6	2*460	2.4	1.8	920	1010	767	CH62
NXB_0502 6	2*502	2.2	1.7	1004	1100	838	CH62

*. 1100 V DC equals U_{brake} at 690 V AC

**. 840 V DC equals U_{brake} at 525 V AC

***) Mains voltage 640-1136 V DC for NX_8 inverter units.

For dimensions of BCU units, see Table 8.

NOTE! The rated currents in given ambient (+50 °C) and coolant (+30 °C) temperatures are achieved only when the switching frequency is equal to or less than the factory default.

NOTE! Braking power: $P_{brake} = 2*U_{brake}^2 / R_{resistor}$ when 2 resistors are used

NOTE! Maximum input DC current: $I_{in\_max} = P_{brake\_max} / U_{brake}$

12.6 VACON® BRAKE RESISTORS AND BRAKE CHOPPER DIMENSIONING

12.6.1 BRAKING ENERGY AND LOSSES

Table 105. VACON® standard brake resistors and NXB energy, mains voltage 465–800 V DC

Mains voltage 465-800 V DC					
BCU type	BCU output			BCU Power loss at full braking	Chassis
	Resistor	Brake energy			
	Resistor type & R [Ω]	Light duty 5 sec (kJ)	High Duty 10 sec (kJ)	c/a/T*) [kW]	
NXB 0031 5	BRR0031 / 63	82	220	0.7/0.2/0.9	CH3
NXB 0061 5	BRR0061 / 14	254	660	1.3/0.3/1.5	CH3
NXB 0087 5	BRR0061 / 14	254	660	1.5/0.3/1.8	CH4
NXB 0105 5	BRR0105 / 6.5	546	1420	1.8/0.3/2.1	CH4
NXB 0140 5	BRR0105 / 6.5	546	1420	2.3/0.3/2.6	CH4
NXB 0168 5	BRR0105 / 6.5	546	1420	2.5/0.3/2.8	CH5
NXB 0205 5	BRR0105 / 6.5	546	1420	3.0/0.4/3.4	CH5
NXB 0261 5	BRR0105 / 6.5	546	1420	4.0/0.4/4.4	CH5
NXB 0300 5	BRR0300 / 3.3	1094	2842	4.5/0.4/4.9	CH61
NXB 0385 5	BRR0300 / 3.3	1094	2842	5.5/0.5/6.0	CH61
NXB 0460 5	BRR0300 / 3.3	1094	2842	5.5/0.5/6.0	CH62
NXB 0520 5	BRR0520 / 1.4	2520	6600	6.5/0.5/7.0	CH62
NXB 0590 5	BRR0520 / 1.4	2520	6600	7.5/0.6/8.1	CH62
NXB 0650 5	BRR0520 / 1.4	2520	6600	8.5/0.6/9.1	CH62
NXB 0730 5	BRR0730 / 0.9	3950	10264	10.0/0.7/10.7	CH62

Table 106. VACON® standard brake resistors and NXB energy, mains voltage 640–1100 V DC

Mains voltage 640-1100 V DC					
BCU type	BCU output			BCU Power loss at full braking	Chassis
	Resistor	Brake energy			
	Resistor type & R [Ω]	Light Duty 5 sec (kJ)	High Duty 10 sec (kJ)	c/a/T* [kW]	
NXB 0170_6	BRR0208 / 7	968	2516	3.6/0.2/3.8	Ch61
NXB 0208_6	BRR0208 / 7	968	2516	4.3/0.3/4.6	Ch61
NXB 0261_6	BRR0208 / 7	968	2516	5.4/0.3/5.7	Ch61
NXB 0325_6	BRR0208 / 7	968	2516	6.5/0.3/6.8	Ch62
NXB 0385_6	BRR0208 / 7	968	2516	7.5/0.4/7.9	Ch62
NXB 0416_6	BRR0416 / 2.5	2710	7046	8.0/0.4/8.4	Ch62
NXB 0460_6	BRR0416 / 2.5	2710	7046	8.7/0.4/9.1	Ch62
NXB 0502_6	BRR0416 / 1.7	3986	10362	9.8/0.5/10.3	Ch62

*. c = power loss into coolant; a = power loss into air; T = total power loss; power losses of input chokes not included. All power losses obtained using max. supply voltage and switching frequency of 3.6 kHz and ClosedLoop control mode. All power losses are worst case losses.

Heavy duty braking: 3 s 100%, followed by 7 s decreasing to zero

Light duty braking: 5 s 100%

NOTE! The rated currents in given ambient (+50 °C) and coolant (+30 °C) temperatures are achieved only when the switching frequency is equal to or less than the factory default.

NOTE! Braking power: $P_{brake} = 2*U_{brake}^2 / R_{resistor}$ when 2 resistors are used

NOTE! Maximum input DC current: $I_{in\_max} = P_{brake\_max} / U_{brake}$

12.6.2 BRAKING POWER AND RESISTANCE, MAINS VOLTAGE 380–500 V AC/600–800 V DC

Table 107. Voltage levels

Voltage	Default +18% DC-link voltage level for braking							
	V AC	380	400	420	440	460	480	500
	V DC	513	540	567	594	621	648	675
	U_{br} +18%	605	637	669	701	733	765	797

Table 108. Maximum braking power

Chassis	NXB unit	Thermal current [Ith]	Maximum braking power at DC-link voltages [kW]						
			605	637	669	701	733	765	797
Ch3	NXB 0031_5	31	37.5	39.5	41.5	43.5	45.4	47.4	49.4
Ch3	NXB 0061_5	61	73.9	77.7	81.6	85.5	89.4	93.3	97.2
Ch4	NXB 0087_5	87	105.3	110.9	116.4	122.0	127.5	133.0	138.6
Ch4	NXB 0105_5	105	127.1	133.8	140.5	147.2	153.9	160.6	167.3
Ch4	NXB 0140_5	140	169.5	178.4	187.3	196.3	205.2	214.1	223.0
Ch5	NXB 0168_5	168	203.4	214.1	224.8	235.5	246.2	256.9	267.6
Ch5	NXB 0205_5	205	248.2	261.3	274.3	287.4	300.4	313.5	326.6
Ch5	NXB 0261_5	261	316.0	332.6	349.2	365.9	382.5	399.1	415.8
Ch61	NXB 0300_5	300	363.2	382.3	401.4	420.6	439.7	458.8	477.9
Ch61	NXB 0385_5	385	466.1	490.6	515.2	539.7	564.2	588.8	613.3
Ch62	NXB 0460_5	460	556.9	586.2	615.5	644.8	674.2	703.5	732.8
Ch62	NXB 0520_5	520	629.6	662.7	695.8	729.0	762.1	795.2	828.4
Ch62	NXB 0590_5	590	714.3	751.9	789.5	827.1	864.7	902.3	939.9
Ch62	NXB 0650_5	650	786.9	828.4	869.8	911.2	952.6	994.0	1035.5
Ch62	NXB 0730_5	730	883.8	930.3	976.8	1023.3	1069.9	1116.4	1162.9

NOTE! The braking powers indicated in Table 108 can only be achieved with minimum resistance.

Table 109. Minimum resistance

Chassis	NXB unit	Thermal current [Ith]	Minimum resistance at DC-link voltages [Ω]						
			605	637	669	701	733	765	797
Ch3	NXB 0031_5	31	19.5	20.6	21.6	22.6	23.6	24.7	25.7
Ch3	NXB 0061_5	61	9.9	10.4	11.0	11.5	12.0	12.5	13.1
Ch4	NXB 0087_5	87	7.0	7.3	7.7	8.1	8.4	8.8	9.2
Ch4	NXB 0105_5	105	5.8	6.1	6.4	6.7	7.0	7.3	7.6
Ch4	NXB 0140_5	140	4.3	4.6	4.8	5.0	5.2	5.5	5.7
Ch5	NXB 0168_5	168	3.6	3.8	4.0	4.2	4.4	4.6	4.7
Ch5	NXB 0205_5	205	3.0	3.1	3.3	3.4	3.6	3.7	3.9
Ch5	NXB 0261_5	261	2.3	2.4	2.6	2.7	2.8	2.9	3.1
Ch61	NXB 0300_5	300	2.0	2.1	2.2	2.3	2.4	2.5	2.7
Ch61	NXB 0385_5	385	1.6	1.7	1.7	1.8	1.9	2.0	2.1
Ch62	NXB 0460_5	460	1.3	1.4	1.5	1.5	1.6	1.7	1.7
Ch62	NXB 0520_5	520	1.2	1.2	1.3	1.3	1.4	1.5	1.5
Ch62	NXB 0590_5	590	1.0	1.1	1.1	1.2	1.2	1.3	1.4
Ch62	NXB 0650_5	650	0.9	1.0	1.0	1.1	1.1	1.2	1.2
Ch62	NXB 0730_5	730	0.8	0.9	0.9	1.0	1.0	1.0	1.1

Table 110. Maximum resistance

Chassis	NXBunit	Thermal current [Ith]	Maximum resistance at DC-link voltages [Ω]						
			605	637	669	701	733	765	797
Ch3	NXB 0031_5	31	97.6	102.8	107.9	113.1	118.2	123.3	128.5
Ch3	NXB 0061_5	61	49.6	52.2	54.8	57.5	60.1	62.7	65.3
Ch4	NXB 0087_5	87	34.8	36.6	38.5	40.3	42.1	43.9	45.8
Ch4	NXB 0105_5	105	28.8	30.3	31.9	33.4	34.9	36.4	37.9
Ch4	NXB 0140_5	140	21.6	22.8	23.9	25.0	26.2	27.3	28.4
Ch5	NXB 0168_5	168	18.0	19.0	19.9	20.9	21.8	22.8	23.7
Ch5	NXB 0205_5	205	14.8	15.5	16.3	17.1	17.9	18.6	19.4
Ch5	NXB 0261_5	261	11.6	12.2	12.8	13.4	14.0	14.6	15.3
Ch61	NXB 0300_5	300	10.1	10.6	11.2	11.7	12.2	12.7	13.3
Ch61	NXB 0385_5	385	7.9	8.3	8.7	9.1	9.5	9.9	10.3
Ch62	NXB 0460_5	460	6.6	6.9	7.3	7.6	8.0	8.3	8.7
Ch62	NXB 0520_5	520	5.8	6.1	6.4	6.7	7.0	7.4	7.7
Ch62	NXB 0590_5	590	5.1	5.4	5.7	5.9	6.2	6.5	6.8
Ch62	NXB 0650_5	650	4.7	4.9	5.1	5.4	5.6	5.9	6.1
Ch62	NXB 0730_5	730	4.1	4.4	4.6	4.8	5.0	5.2	5.5

12.6.3 BRAKING POWER AND RESISTANCE, MAINS VOLTAGE 525–690 V AC/840–1100 V DC

Table 111. Voltage levels

Voltage	Default +18% DC-link voltage level for braking							
	V AC	525	550	575	600	630	660	690
	V DC	708.8	742.5	776.3	810	850.5	891	931.5
	U_{br} +18%	836	876	916	956	1004	1051	1099

Table 112. Maximum braking power

Chassis	NXB unit	Thermal current [Ith]	Max braking power at DC-link voltages [kW]							
			836	876	916	956	1004	1051	1099	1136 *
Ch61	NXB 0170_6	170	284.4	297.9	311.4	325.0	341.2	357.5	373.7	386.2
Ch61	NXB 0208_6	208	347.9	364.5	381.0	397.6	417.5	437.4	457.3	472.6
Ch62	NXB 0261_6	261	436.6	457.4	478.1	498.9	523.9	548.8	573.8	593.0
Ch62	NXB 0325_6	325	543.6	569.5	595.4	621.3	652.3	683.4	714.5	738.4
Ch62	NXB 0385_6	385	644.0	674.6	705.3	736.0	772.8	809.6	846.4	874.7
Ch62	NXB 0416_6	416	695.8	729.0	762.1	795.2	835.0	874.7	914.5	945.2
Ch62	NXB 0460_6	460	769.4	806.1	842.7	879.3	923.3	967.3	1011.2	1045.1
Ch62	NXB 0502_6	502	839.7	879.7	919.6	959.6	1007.6	1055.6	1103.6	1140.5

NOTE! The braking powers indicated in Table 112 can only be achieved with minimum resistance.

Table 113. Minimum resistance

Chassis	NXB unit	Thermal current [Ith]	Minimum resistance at DC-link voltages [Ω]							
			836	876	916	956	1004	1051	1099	1136 *
Ch61	NXB 0170_6	170	4.9	5.2	5.4	5.6	5.9	6.2	6.5	6.7
Ch61	NXB 0208_6	208	4.0	4.2	4.4	4.6	4.8	5.1	5.3	5.5
Ch62	NXB 0261_6	261	3.2	3.4	3.5	3.7	3.8	4.0	4.2	4.4
Ch62	NXB 0325_6	325	2.6	2.7	2.8	2.9	3.1	3.2	3.4	3.5
Ch62	NXB 0385_6	385	2.2	2.3	2.4	2.5	2.6	2.7	2.9	3.0
Ch62	NXB 0416_6	416	2.0	2.1	2.2	2.3	2.4	2.5	2.6	2.7
Ch62	NXB 0460_6	460	1.8	1.9	2.0	2.1	2.2	2.3	2.4	2.5
Ch62	NXB 0502_6	502	1.7	1.7	1.8	1.9	2.0	2.1	2.2	2.3

Table 114. Maximum resistance

Chassis	NXB unit	Thermal current [Ith]	Maximum resistance at DC-link voltages [Ω]							
			836	876	916	956	1004	1051	1099	1136 *
Ch61	NXB 0170_6	170	24.6	25.8	26.9	28.1	29.5	30.9	32.3	33.4
Ch61	NXB 0208_6	208	20.1	21.1	22.0	23.0	24.1	25.3	26.4	27.3
Ch62	NXB 0261_6	261	16.0	16.8	17.5	18.3	19.2	20.1	21.1	21.8
Ch62	NXB 0325_6	325	12.9	13.5	14.1	14.7	15.4	16.2	16.9	17.5
Ch62	NXB 0385_6	385	10.9	11.4	11.9	12.4	13.0	13.7	14.3	14.8
Ch62	NXB 0416_6	416	10.1	10.5	11.0	11.5	12.1	12.6	13.2	13.7
Ch62	NXB 0460_6	460	9.1	9.5	10.0	10.4	10.9	11.4	11.9	12.3
Ch62	NXB 0502_6	502	8.3	8.7	9.1	9.5	10.0	10.5	10.9	11.3

* Only valid for NX_8 brake chopper units.

12.7 BRAKE CHOPPER UNIT – FUSE SELECTION

Table 115. BCU fuse selection, mains voltage 465–800 V DC

Chassis	Type	Min res. value, 2* [Ω]	Brk current	Fuse size*	DIN43620		"TTF" threaded end "7X" or size 83 with end contacts		"TTQF" threaded end size84 or "PLAF" 2x84 with end contacts	
					aR fuse part nr.	Qty. of fuses /dr	aR fuse part nr.	Qty. of fuses/ dr	aR fuse part nr.	Qty. of fuses/ dr
CH3	0016	52.55	32	DIN0	PC70UD13C80PA	2	PC70UD13C63TF	2	-	-
CH3	0022	38.22	44	DIN0	PC70UD13C80PA	2	PC70UD13C80TF	2	-	-
CH3	0031	27.12	62	DIN0	PC70UD13C125PA	2	PC70UD13C125TF	2	-	-
CH3	0038	22.13	76	DIN0	PC70UD13C125PA	2	PC70UD13C125TF	2	-	-
CH3	0045	18.68	90	DIN0	PC70UD13C200PA	2	PC70UD13C200TF	2	-	-
CH3	0061	13.78	122	DIN0	PC70UD13C200PA	2	PC70UD13C200TF	2	-	-
CH4	0072	11.68	144	1	PC71UD13C315PA	2	PC71UD13C315TF	2	-	-
CH4	0087	9.66	174	1	PC71UD13C315PA	2	PC71UD13C315TF	2	-	-
CH4	0105	8.01	210	1	PC71UD13C400PA	2	PC71UD13C400TF	2	-	-
CH4	0140	6.01	280	3	PC73UD13C500PA	2	PC73UD13C500TF	2	-	-
CH5	0168	5.00	336	3	PC73UD13C630PA	2	PC73UD13C630TF	2	-	-
CH5	0205	4.10	410	3	PC73UD11C800PA	2	PC73UD13C800TF	2	-	-
CH5	0261	3.22	522	3	PC73UD90V11CPA	2	PC73UD95V11CTF	2	-	-
CH61	0300	2.80	600	3	PC73UD90V11CPA	2	PC73UD95V11CTF	2	-	-
CH61	0385	2.18	770	3	PC73UD11C800PA	4	PC83UD11C13CTF	2	-	-
CH62	0460	1.83	920	3	PC73UD11C800PA	4	PC73UD13C800TF	4	PC84UD13C15CTQ	2
CH62	0520	1.62	1040	3	PC73UD90V11CPA	4	PC73UD95V11CTF	4	PC84UD12C18CTQ	2
CH62	0590	1.43	1180	3	PC73UD90V11CPA	4	PC73UD95V11CTF	4	PC84UD11C20CTQ	2
CH62	0650	1.29	1300	3	PC73UD90V11CPA	4	PC73UD95V11CTF	4	PC84UD11C22CTQ	2
CH62	0730	1.15	1460		-		PC83UD11C13CTF	4	PC84UD11C24CTQ	2

Table 116. BCU fuse selection, mains voltage 640–1100 V DC

Chassis	Type	Min res. value, 2* [Ω]	Brk current	Fuse size*	DIN43620		"TTF" threaded end "7X" or size 83 with end contacts		"TTQF" threaded end size84 or "PLAF" 2x84 with end contacts	
					aR fuse part nr.	Qty. of fuses /dr	aR fuse part nr.	Qty. of fuses/ dr	aR fuse part nr.	Qty. of fuses/ dr
CH61	0170	6.51	340	DIN3	PC73UD13C630PA	2	PC73UD13C630TF	2	-	-
CH61	0208	5.32	416	DIN3	PC73UD11C800PA	2	PC73UD13C800TF	2	-	-
CH61	0261	4.24	522	DIN3	PC73UD11C800PA	2	PC73UD13C800TF	2	-	-
CH62	0310	3.41	650	DIN3	PC73UD13C630PA	4	PC83UD12C11CTF	2	-	-
CH62	0385	2.88	770	DIN3	PC73UD13C630PA	4	PC83UD11C13CTF	2	-	-
CH62	0416	2.66	832	DIN3	PC73UD11C800PA	4	PC83UD11C14CTF	2	PC84UD13C15CTQ	2
CH62	0460	2.41	920	DIN3	PC73UD11C800PA	4	PC73UD13C800TF	4	PC84UD13C15CTQ	2
CH62	0502	2.21	1004	DIN3	PC73UD11C800PA	4	PC73UD13C800TF	4	PC84UD13C15CTQ	2

13. GRID CONVERTER/UTILITY INTERACTIVE INVERTER

13.1 SAFETY

To be connected only to a dedicated branch circuit protection.

The output of the inverter can be connected with up to 4 parallel combination of modules.

Ground fault detector/interrupter shall be installed at the inverter or at the array, if the inverter is connected to direct photovoltaic inputs from a grounded photovoltaic array.

Surge protection device shall be installed.

WARNING



Risk of electric shock from energy stored in capacitor. Both AC and DC voltage sources are terminated inside this equipment. Each circuit must be individually disconnected and the service person must wait 5 minutes before servicing or accessing or removing the cover.

WARNING



Hazardous voltage remains for 5 minutes after disconnecting the main power supply.

WARNING



When the photovoltaic array is exposed to light, it supplies a DC voltage to this equipment.

WARNING



For continued protection against risk of fire, use fuses as mentioned in the user manual.

WARNING



Hot surface - Risk of Burn. Resistors, heaters, chokes, dU/dt filters, LCL filters, sine-wave filter are examples of hot surfaces and not limited to these.

CAUTION



Wear protective gloves when you do installation, cabling or maintenance operations. There can be sharp edges in the AC drive/frequency converter that can cause cuts.

Read the user manual, drawings and all other related documentation.

13.2 USED SYMBOLS AND MARKINGS

Table 117. Symbols and Markings

B+	The terminal for the DC+ connection
B-	The terminal for the DC- connection
U/T1	The terminal for the L1 connection
V/T2	The terminal for the L2 connection
W/T3	The terminal for the L3 connection
	The grounding terminal

13.3 TYPE CODE

The VACON® type code is made of standard codes and optional codes. Each part of the type code agrees to the data in the order. For example:

NX_ 3100 6 xxxxxxxxxxxxx

Table 118. Type code description

Code	Description
NX_	Product range: • NXP (frame size 2xCH64) • NXA (frame size CH61, CH62, CH63, CH64)
3100	Apparent current Example: 3100 = 3100 A Ranges from 0160 to 4140 A. For more accurate current rating information of modules, check the ratings tables.
6	Voltage range (3-phase) • 5 = 180–500 V AC • 6 = 300–600 V AC
xxxx	See the description of the rest of the type code in Chapter 3.1.

13.4 CONDITIONS OF ACCEPTABILITY

1. The power converter shall be installed in compliance with the enclosure, mounting, spacing, casualty, and segregation requirements of the ultimate application.
2. The equipment is intended to be installed within a suitable enclosure for the end product and operating environment.
3. The need for external equipment disconnect devices shall be evaluated in the end product.
4. The suitability of the module chassis in combination with the end product enclosure, including accessibility of live parts through openings in the enclosure, impact tests for reduced enclosure thicknesses, reliable retention of guards or barrier for prevention of shock hazards, etc., shall be considered in the end product evaluation.
5. The power supply bulk capacitors store hazardous energy for 5 minutes after disconnecting all sources of power.

This inverter is intended for operation in an environment having a maximum ambient temperature of 50 °C (122 °F).

13.4.1 CONDITIONS OF ACCEPTABILITY AND ENGINEERING CONSIDERATIONS FOR UL1741

1. Inverter can be connected only to Delta winding of transformer.
2. Communication cables shall be routed via grounded metallic conduits for field wiring.
3. UL listed Surge protection shall be installed in enclosure. For UL1741 certification, Mersen STXR600D05 was used.
4. Additional relay shall be included in end installation for detection of Open phase.
5. VACON® pre-charging circuit shall be used.
6. Only semiconductor fuses which are in UL1741 files shall be used for modules protection. Please refer to Table 123 and Table 126.
7. UL listed branch circuit protection current rating shall be as per ratings mentioned in Table 119.
8. UL1741 Utility Interactive inverters and Stand-alone inverters shall be loaded with System software NXP2V200.
9. UL1741 Utility Interactive inverters shall be loaded with Application software ARFIF106V103.

13.5 REQUIRED TOOLS

No special tools apart from a torque wrench and screwdrivers are needed for the installation of the device. The bolt and screw sizes and tightening torques are stated in this manual.

13.6 MOUNTING

For mounting instructions, see Chapter 5.

13.6.1 DIMENSIONS - DRIVE UNIT

Find the dimensions for the grid converter unit in Chapter 5.1.2.

13.6.2 DIMENSIONS - RLC FILTER

Find the dimensions for the RLC filter in Chapter 10.6.3.

13.6.3 ENCLOSURE SIZES FOR UL1741 INVERTERS INSTALLATION

All applicable tests from UL1741, IEEE 1547, or UL 1741 SA, with the exception of the enclosure tests have been conducted on the UL1741 recognized component version of the product.

Enclosure tests must be conducted in the end product application, at the appropriate levels and in the conditions for end product use.

The Inverters were tested for UL1741, IEEE 1547, and UL1741SA when installed in enclosures. Enclosure tests such as temperature tests, ventilation tests, or fooling failure tests must be considered. Some construction details which should be considered are as follows:

- The size of enclosure in which the Inverter is installed is smaller in volume than a similar unit which has already been tested.
- Ventilation openings are smaller in size.
- Enclosure cooling delivery is less than a similar unit which has already been tested.

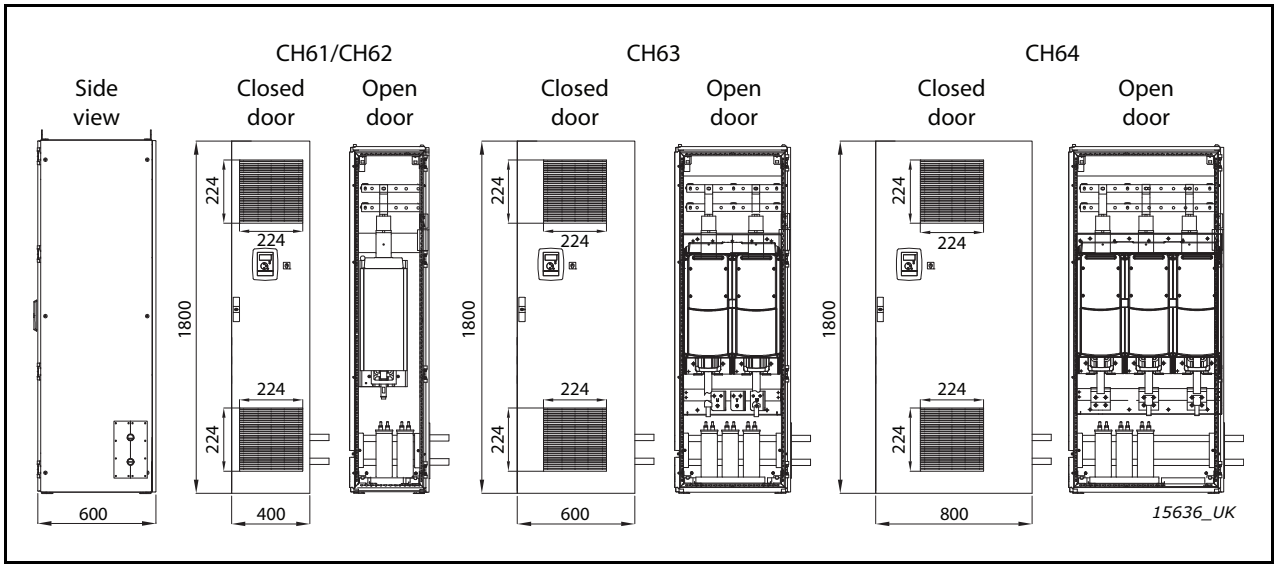

Figure 127. Layouts of liquid-cooled inverters installed in enclosures

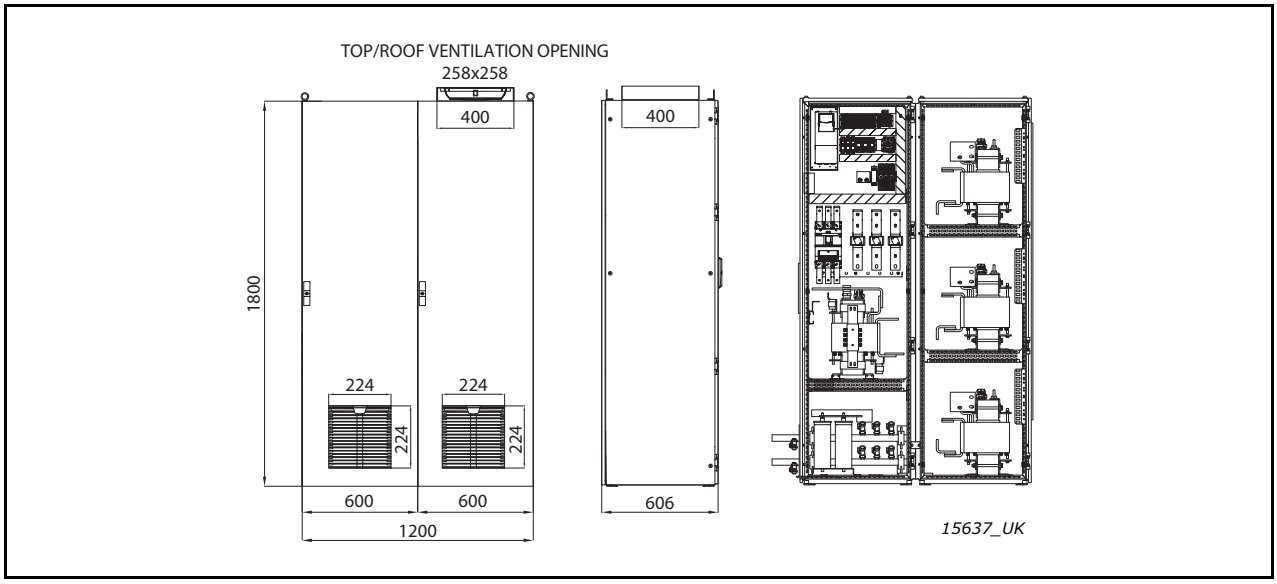

Figure 128. Layout of RLC 385/520/750 A installed in an enclosure

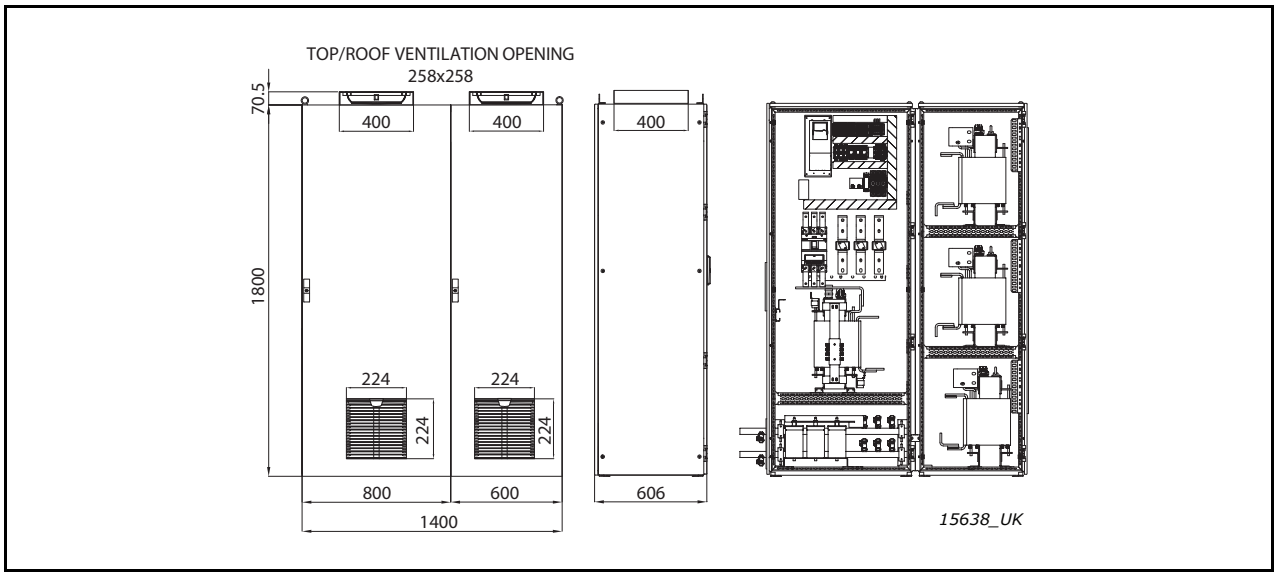

Figure 129. Layout of RLC 920 A installed in an enclosure

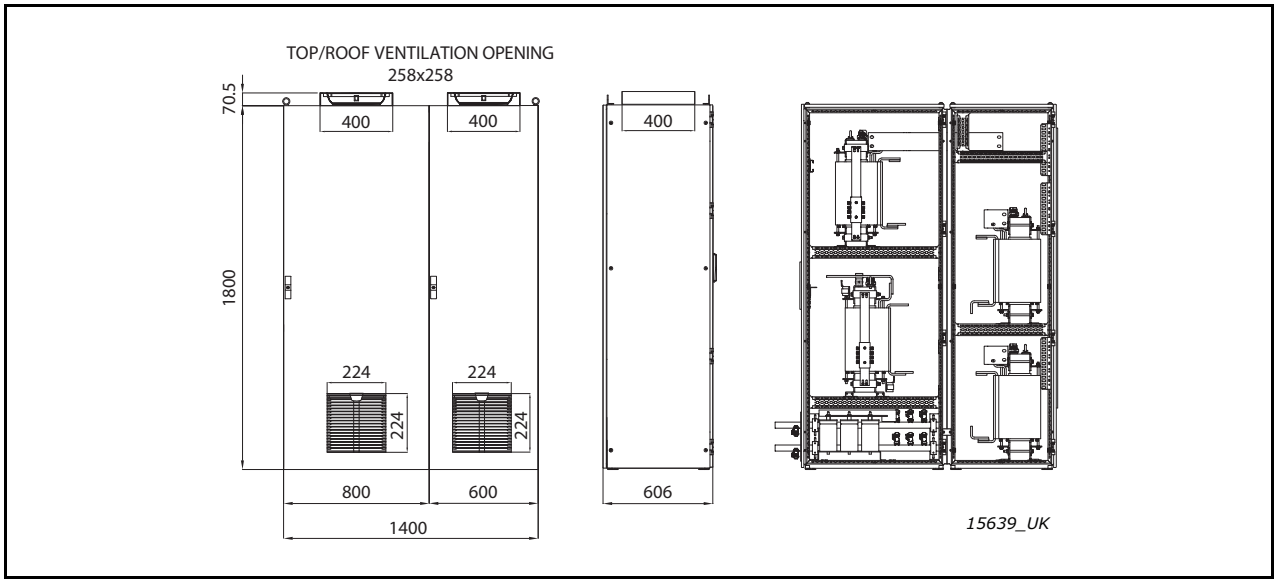

Figure 130. Layout of RLC 1180/1640/2300 A installed in an enclosure

13.7 COOLING

Find the guidelines and specifications for the cooling of the grid converter in Chapter 5.2.

13.8 POWER CABLING

The AC input and AC output circuits are isolated from the enclosure. The system grounding, if required by Section 250 of the National Electrical Code, ANSI/NFPA 70, is the responsibility of the installer.

Use the wiring methods described in National Electrical Code, ANSI/NFPA 70.

CAUTION!

To reduce the risk of fire, connect only to a circuit provided with branch-circuit overcurrent protection in accordance with the National Electrical Code, ANSI/NFPA 70. See the maximum branch circuit overcurrent protection values in Table 119.

13.8.1 CABLE INSTALLATION AND THE UL STANDARDS

To meet the UL (Underwriters Laboratories) regulations, a UL-approved copper cable with a minimum heat-resistance of +60/75 °C must be used.

Use Class 1 wire only.

Use shielded cables.

13.8.2 CABLE SIZES - UL1741

Table 119. Cable sizes for 600–1100 V DC (400–600 V AC)

Enclosure size	Type	Maximum input DC overcurrent protection (A)	Max. branch circuit overcurrent protection (A)	DC supply cable	AC cable
CH61	NX_0170 6	400	250	250 kcmil	4/0 AWG
	NX_0208 6	400	250	350 kcmil	250 kcmil
	NX_0261 6	500	400	500 kcmil	400 kcmil
CH62	NX_0325 6	700	400	2x250 kcmil	2x3/0 AWG
	NX_0385 6	800	500	2x300 kcmil	2x250 kcmil
	NX_0416 6	1000	500	2x350 kcmil	2x250 kcmil
	NX_0460 6	1000	600	3x300 kcmil	2x300 kcmil
	NX_0502 6	1000	600	2x500 kcmil	2x350 kcmil
CH63	NX_0590 6	1100	750	3x300 kcmil	3x250 kcmil
	NX_0650 6	1500	800	3x400 kcmil	3x300 kcmil
	NX_0750 6	1500	1000	3x500 kcmil	3x350 kcmil
CH64	NX_0820 6	1500	1000	4x350 kcmil	4x250 kcmil
	NX_0920 6	1800	1250	4x400 kcmil	4x300 kcmil
	NX_1030 6	2000	1250	4x500 kcmil	4x400 kcmil
	NX_1180 6	2200	1600	6x350 kcmil	4x400 kcmil
	NX_1300 6	2400	1600	6x400 kcmil	5x400 kcmil
	NX_1500 6	3000	2000	6x500 kcmil	6x350 kcmil
	NX_1700 6	3400	2000	6x500 kcmil	6x500 kcmil
2xCH64	NX_1850 6	2x1800	2250	2x4x500 kcmil	2x4x400 kcmil
	NX_2120 6	2x2000	2500	2x6x350 kcmil	2x4x500 kcmil
	NX_2340 6	2x2200	3000	2x6x400 kcmil	2x5x400 kcmil
	NX_2700 6	2x2400	3000	2x6x500 kcmil	2x6x350 kcmil
	NX_3100 6	2x3000	3500	2x6x500 kcmil	2x6x500 kcmil

13.8.3 TERMINAL SIZES

See the dimensional drawings in Chapter 5.1.2.

13.8.4 BOLT SIZES AND TIGHTENING TORQUES

Table 120. Bolt sizes and tightening torques

Enclosure size	Drive type	DC terminal			AC terminal			
		Bolt	Torque (Nm)	Torque (in-lb)	Bolt	Max. number of cables	Torque (Nm)	Torque (in-lb)
CH61	NX_0300 5 - NX_0385 5 NX_0170 6 - NX_0261 6	M12	70	620	M12	2	70	620
CH62	NX_0460 5 - NX_0730 5 NX_0325 6 - NX_0502 6	M12	70	620	M12	4	70	620

Table 120. Bolt sizes and tightening torques

Enclosure size	Drive type	DC terminal			AC terminal			
		Bolt	Torque (Nm)	Torque (in-lb)	Bolt	Max. number of cables	Torque (Nm)	Torque (in-lb)
CH63	NX_0820 5 - NX_1150 5 NX_0590 6 - NX_0750 6	M12	70	620	M12	8	70	620
CH64	NX_1370 5 - NX_2300 5 NX_0820 6 - NX_1700 6	M12	70	620	M12	4	70	620
2×CH64	NX_2470 5 - NX_4140 5 NX_1850 6 - NX_3100 6	M12	70	620	6×M12	2×4	70	620

13.9 GROUNDING

Connect the cable shields of the mains cables to the grounding conductor of the switchgear enclosure.

For grounding of the drive itself, use the grounding terminal on the drive mounting plate. See Chapter 6.1.8.

13.9.1 GROUNDING TERMINAL

Grounding conductor sizing shall follow NEC Article 250 and minimum conductor size requirements as per NEC Table 250.122.

Use copper, copper-clad aluminum, or aluminum conductors.

Wire type – rated 75/90 °C (167/194 °F).

Mounting: M8 bolt, tightening torque: 13.5 Nm (120 in-lb).

13.9.2 GFDI REQUIREMENTS FOR UL1741 COMPLIANT INSTALLATIONS

Inverters or charge controllers with direct photovoltaic inputs from a grounded photovoltaic array or arrays must be provided with a ground-fault detector/interrupter (GFDI). The inverter or charge controller must be used with an external GFDI device as required by the Article 690 of the National Electrical Code for the installation location.

13.10 PROTECTIONS

Integral solid state short circuit protection does not provide branch circuit protection. Branch circuit protection must be provided in accordance with the National Electrical Code and any additional local codes. See the maximum branch circuit overcurrent protection values in Table 119.

13.10.1 OVERCURRENT PROTECTION

The overcurrent protection fuses must be installed by the end user.

13.10.1.1 AC output circuit - European grid codes

Overcurrent protection for the AC output circuit must be provided in the field. See the fuse specifications in the tables below.

Table 121. AC fuse sizes for VACON® NX Liquid-cooled drives (180-500 V)

Enclosure size	Type	Input terminals (pcs)	Fuses needed (pcs)	Min. short circuit current $I_{cp,mr}$ [A]	TTF threaded end fuse (type code)
CH5	NX_0168 5	3	3	2000	PC30UD69V315TF
	NX_0205 5	3	3	2700	PC30UD69V400TF
	NX_0261 5	3	3	3400	PC31UD69V500TF
CH61	NX_0300 5	3	3	4200	PC32UD69V630TF
	NX_0385 5	3	3	4200	PC32UD69V630TF
CH62	NX_0460 5	3	3	7600	PC33UD69V1000TF
	NX_0520 5	3	3	7600	PC33UD69V1000TF
	NX_0590 5	3	3	9000	PC33UD69V1100TF
	NX_0650 5	3	3	11000	PC33UD69V1250TF
	NX_0730 5	3	3	11000	PC33UD69V1250TF
CH63	NX_0820 5	3	6	2x6100	PC32UD69V800TF
			3	10000	PC44UD75V16CTQ
	NX_0920 5	3	6	2x7600	PC33UD69V1000TF
			3	10000	PC44UD75V16CTQ
	NX_1030 5	3	6	2x7600	PC33UD69V1000TF
			3	12500	PC44UD75V18CTQ
	NX_1150 5	3	6	2x9000	PC33UD69V1100TF
			3	14000	PC44UD75V20CTQ
CH64	NX_1370 5	3	9	3x7600	PC33UD69V1000TF
			3	18000	PC44UD75V24CTQ
	NX_1640 5	3	9	3x7600	PC33UD69V1000TF
			3	23000	PC44UD70V27CTQ
	NX_2060 5	3	9	3x11000	PC33UD69V1250TF
			3	42000	PC44UD69V34CTQB
	NX_2300 5	3	9	3x11000	PC33UD69V1250TF
			3	24000	PC47UD70V36CP50
2xCH64	NX_2470 5	6	18	18300	PC32UD69V800TF
			6	14400	PC44UD75V20CTQ
	NX_2900 5	6	18	22800	PC33UD69V1000TF
			6	18000	PC44UD75V24CTQ
	NX_3710 5	6	18	27000	PC33UD69V1100TF
			6	25000	PC44UD70V30CTQ
	NX_4140 5	6	18	33000	PC33UD69V1250TF
			6	30000	PC44UD69V34CTQB

Table 122. AC fuse sizes for VACON® NX Liquid-cooled drives (300-600 V)

Enclosure size	Type	Input terminals (pcs)	Fuses needed (pcs)	Min. short circuit current $I_{cp,mr}$ [A]	TTF threaded end fuse (type code)
CH61	NX_0170 6	3	3	2250	PC71UD13C315TF
	NX_0208 6	3	3	3500	PC71UD13C400TF
	NX_0261 6	3	3	3800	PC73UD13C500TF
CH62	NX_0325 6	3	3	5200	PC73UD13C630TF
	NX_0385 6	3	3	5200	PC73UD13C630TF
	NX_0416 6	3	3	7900	PC73UD13C800TF
	NX_0460 6	3	3	7900	PC73UD13C800TF
	NX_0502 6	3	3	7900	PC73UD13C800TF
CH63	NX_0590 6	3	3	12500	PC73UD95V11CTF
	NX_0650 6	3	3	12500	PC73UD95V11CTF
	NX_0750 6	3	3	15000	PC83UD11C13CTF
CH64	NX_0820 6	3	6	2x7900	PC73UD13C800TF
			3	17000	PC83UD11C14CTF
	NX_0920 6	3	6	2x7900	PC73UD13C800TF
			3	20000	PC83UD95V16CTF
	NX_1030 6	3	6	2x12500	PC73UD95V11CTF
			3	19000	PC84UD12C18CTQ
	NX_1180 6	3	6	2x12500	PC73UD95V11CTF
			3	23000	PC84UD11C20CTQ
	NX_1300 6	3	9	3x7900	PC73UD13C800TF
			3	27000	PC84UD11C22CTQ
	NX_1500 6	3	9	3x12500	PC73UD95V11CTF
			3	29000	PC84UD11C24CTQ
	NX_1700 6	3	9	3x12500	PC73UD95V11CTF
			3	42000	9 URD 84 TTQF 3000
2xCH64	NX_1850 6	6	12	15800	PC73UD13C800TF
			6	20000	PC83UD95V16CTF
	NX_2120 6	6	12	25000	PC73UD95V11CTF
			6	25000	9 URD 83 TTF 1800
	NX_2340 6	6	12	25000	PC73UD95V11CTF
			6	23000	PC84UD11C20CTQ
	NX_2700 6	6	18	23700	PC73UD13C800TF
			6	27000	PC84UD11C22CTQ
	NX_3100 6	6	18	37500	PC73UD95V11CTF
			6	35000	PC84UD10C27CTQ

13.10.1.2 AC output circuit - UL1741

Overcurrent protection for the AC output circuit must be provided in the field. See the fuse specifications in the tables below.

Table 123. AC fuse sizes for VACON® NX Liquid-cooled drives (400-600 V)

Enclosure size	Type	Fuses needed (pcs)	Fuse (type code)
CH61	NX_0170 6	3	PC71UD13C315TF
	NX_0208 6	3	PC71UD13C400TF
	NX_0261 6	3	PC73UD13C500TF
CH62	NX_0325 6	3	PC73UD13C630TF
	NX_0385 6	3	PC73UD13C630TF
	NX_0416 6	3	PC73UD13C800TF
	NX_0460 6	3	PC73UD13C800TF
	NX_0502 6	3	PC73UD13C800TF
CH63	NX_0590 6	3	PC73UD95V11CTF
	NX_0650 6	3	PC73UD95V11CTF
	NX_0750 6	3	PC83UD11C13CTF
CH64	NX_0820 6	6	PC73UD13C800TF
		3	PC83UD11C14CTF
	NX_0920 6	6	PC73UD13C800TF
		3	PC83UD95V16CTF
	NX_1030 6	6	PC73UD95V11CTF
		3	PC84UD12C18CTQ
	NX_1180 6	6	PC73UD95V11CTF
		3	PC84UD11C20CTQ
	NX_1300 6	9	PC73UD13C800TF
		3	PC84UD11C22CTQ
	NX_1500 6	9	PC73UD95V11CTF
		3	PC84UD11C24CTQ
	NX_1700 6	9	PC73UD95V11CTF
		3	9 URD 84 TTQF 3000
2xCH64	NX_1850 6	12	PC73UD13C800TF
		6	PC83UD95V16CTF
	NX_2120 6	12	PC73UD95V11CTF
		6	9 URD 83 TTF 1800
	NX_2340 6	12	PC73UD95V11CTF
		6	PC84UD11C20CTQ
	NX_2700 6	18	PC73UD13C800TF
		6	PC84UD11C22CTQ
	NX_3100 6	18	PC73UD95V11CTF
		6	PC84UD10C27CTQ

13.10.1.3 DC source circuit - European grid codes

Overcurrent protection for the DC source circuit must be provided in the field. See the fuse specifications in the tables below.

Table 124. DC fuse sizes for VACON® NX Liquid-cooled drives (180-500 V)

Enclosure size	Type	Input terminals (pcs)	Fuses needed (pcs)	TTF/TTQF threaded end fuse (type code)
CH5	NX_0168 5	2	2	PC71UD13C315TF
	NX_0205 5	2	2	PC71UD13C400TF
	NX_0261 5	2	2	PC73UD13C500TF
CH61	NX_0300 5	2	2	PC73UD13C630TF
	NX_0385 5	2	2	PC73UD13C800TF
CH62	NX_0460 5	2	2	PC73UD95V11CTF
	NX_0520 5	2	2	PC73UD95V11CTF
	NX_0590 5	2	2	PC73UD95V11CTF
	NX_0650 5	2	2	PC83UD11C13CTF
	NX_0730 5	2	2	PC83UD11C13CTF
CH63	NX_0820 5	2	4	PC73UD13C800TF
			2	PC84UD13C15CTQ
	NX_0920 5	2	4	PC73UD95V11CTF
			2	PC84UD12C18CTQ
	NX_1030 5	2	4	PC73UD13C800TF
			2	PC84UD11C20CTQ
	NX_1150 5	2	4	PC83UD11C13CTF
			2	PC84UD11C22CTQ
CH64	NX_1370 5	2/4	4	PC83UD11C14CTF
			2	PC84UD10C27CTQ
	NX_1640 5	2/4	8	PC73UD13C800TF
			2	PC87UD12C30CP50
	NX_2060 5	2/4	8	PC73UD95V11CTF
			2	PC87UD11C38CP50
	NX_2300 5	2/4	8	PC73UD95V11CTF
			2	10 URD 284 PLAF 4400
2xCH64	NX_2470 5	4/8	8	PC83UD11C13CTF
			4	PC84UD11C24CTQ
	NX_2900 5	4/8	16	PC73UD13C800TF
			4	PC87UD12C30CP50
	NX_3710 5	4/8	16	PC73UD95V11CTF
			4	PC87UD11C38CP50
	NX_4140 5	4/8	16	PC73UD95V11CTF
			4	10 URD 284 PLAF 4400

Table 125. DC fuse sizes for VACON® NX Liquid-cooled drives (300-600 V)

Enclosure size	Type	Input terminals (pcs)	Fuses needed (pcs)	TTF/TTQF threaded end fuse (type code)
CH61	NX_0170 6	2	2	PC71UD13C400TF
	NX_0208 6	2	2	PC71UD13C400TF
	NX_0261 6	2	2	PC73UD13C500TF
CH62	NX_0325 6	2	2	PC73UD13C630TF
	NX_0385 6	2	2	PC73UD13C800TF
	NX_0416 6	2	2	PC73UD13C800TF
	NX_0460 6	2	2	PC73UD12C900TF
	NX_0502 6	2	2	PC73UD12C900TF
CH63	NX_0590 6	2	2	PC83UD12C11CTF
	NX_0650 6	2	2	PC83UD11C13CTF
	NX_0750 6	2	2	PC83UD11C14CTF
CH64	NX_0820 6	2/4	4	PC73UD13C800TF
			2	PC84UD13C15CTQ
	NX_0920 6	2/4	4	PC73UD12C900TF
			2	PC84UD12C18CTQ
	NX_1030 6	2/4	4	PC83UD12C11CTF
			2	PC84UD11C20CTQ
	NX_1180 6	2/4	4	PC83UD12C11CTF
			2	PC84UD11C22CTQ
	NX_1300 6	2/4	4	PC83UD11C13CTF
			2	PC84UD11C24CTQ
	NX_1500 6	2/4	4	PC83UD11C14CTF
			2	PC87UD12C30CP50
	NX_1700 6	2/4	8	PC73UD12C900TF
			2	PC87UD11C34CP50
2xCH64	NX_1850 6	4/8	8	PC73UD12C900TF
			4	PC84UD12C18CTQ
	NX_2120 6	4/8	8	PC83UD12C11CTF
			4	PC84UD11C20CTQ
	NX_2340 6	4/8	8	PC83UD11C13CTF
			4	PC84UD11C22CTQ
	NX_2700 6	4/8	8	PC83UD11C14CTF
			4	PC84UD11C24CTQ
	NX_3100 6	4/8	16	PC73UD13C800TF
			4	PC87UD12C30CP50

13.10.1.4 DC source circuit - UL1741

Overcurrent protection for the DC source circuit must be provided in the field. See the fuse specifications in the tables below.

Table 126. DC fuse sizes for VACON® NX Liquid-cooled drives (400-600 V)

Enclosure size	Type	Fuses needed (pcs)	Fuse (type code)
CH61	NX_0170 6	2	PC71UD13C400TF
	NX_0208 6	2	PC71UD13C400TF
	NX_0261 6	2	PC73UD13C500TF
CH62	NX_0325 6	2	PC73UD13C630TF
	NX_0385 6	2	PC73UD13C800TF
	NX_0416 6	2	PC73UD13C800TF
	NX_0460 6	2	PC73UD12C900TF
	NX_0502 6	2	PC73UD12C900TF
CH63	NX_0590 6	2	PC83UD12C11CTF
	NX_0650 6	2	PC83UD11C13CTF
	NX_0750 6	2	PC83UD11C14CTF
CH64	NX_0820 6	4	PC73UD13C800TF
		2	PC84UD13C15CTQ
	NX_0920 6	4	PC73UD12C900TF
		2	PC84UD12C18CTQ
	NX_1030 6	4	PC83UD12C11CTF
		2	PC84UD11C20CTQ
	NX_1180 6	4	PC83UD12C11CTF
		2	PC84UD11C22CTQ
	NX_1300 6	4	PC83UD11C13CTF
		2	PC84UD11C24CTQ
	NX_1500 6	4	PC83UD11C14CTF
		2	PC87UD12C30CP50
	NX_1700 6	8	PC73UD12C900TF
		2	PC87UD11C34CP50
2xCH64	NX_1850 6	8	PC73UD12C900TF
		4	PC84UD12C18CTQ
	NX_2120 6	8	PC83UD12C11CTF
		4	PC84UD11C20CTQ
	NX_2340 6	8	PC83UD11C13CTF
		4	PC84UD11C22CTQ
	NX_2700 6	8	PC83UD11C14CTF
		4	PC84UD11C24CTQ
	NX_3100 6	16	PC73UD13C800TF
		4	PC87UD12C30CP50

13.10.2 VOLTAGE/FREQUENCY TRIP LIMITS

For field adjustable trip points for voltage and frequency, see the VACON® NXP Grid Converter Application Manual (ARFIF106).

13.11 CONTROL CABLING

For selection of the control cables, see Chapter 6.2.2.1.

The field communication cables shall be routed through grounded metal conduits.

13.12 RLC FILTER

For RLC filter selection, see Table 127 below.

Table 127. RLC filters for UL1741 installations

Enclosure size	Type	RLC filter (type code)
CH61	NX_0170 6	RLC-0385-6-0
	NX_0208 6	RLC-0385-6-0
	NX_0261 6	RLC-0385-6-0
CH62	NX_0325 6	RLC-0385-6-0
	NX_0385 6	RLC-0385-6-0
	NX_0416 6	RLC-0520-6-0
	NX_0460 6	RLC-0520-6-0
	NX_0502 6	RLC-0520-6-0
CH63	NX_0590 6	RLC-0750-6-0
	NX_0650 6	RLC-0750-6-0
	NX_0750 6	RLC-0750-6-0
CH64	NX_0820 6	RLC-0920-6-0
	NX_0920 6	RLC-0920-6-0
	NX_1030 6	RLC-1180-6-0
	NX_1180 6	RLC-1180-6-0
	NX_1300 6	RLC-1640-6-0
	NX_1500 6	RLC-1640-6-0
	NX_1700 6	RLC-1640-6-0
2xCH64	NX_1850 6	2 x RLC-1180-6-0
	NX_2120 6	2 x RLC-1180-6-0
	NX_2340 6	2 x RLC-1180-6-0
	NX_2700 6	2 x RLC-1640-6-0
	NX_3100 6	2 x RLC-1640-6-0

13.13 SPECIFICATIONS

13.13.1 TECHNICAL DATA

For the technical data of the RLC filters, see Chapter 10.6.3.

Table 128. Technical data for UL1741 Utility Interactive operating mode

DC Ratings - Input	Maximum input/output voltage	1100 V DC
	Range of input/output voltage	600-1100 V DC
	DC input start range	640 V DC
	Maximum input/output operating current	See Table 132
	Circuit combiner on input	NO
	Maximum input DC overcurrent protection	See Table 126
AC Ratings - Output	Output - Grid configurations allowed for product connection	Delta 3 wire
	Nominal (line to line) output/input voltage	NX xxxx 6: 400–600 V AC
	Nominal output frequency	60 Hz
	Maximum continuous output/input current	See Table 132
	Maximum continuous AC power (at 600 V)	See Table 132
	Maximum branch circuit overcurrent protection	See Table 119
	Limits of accuracy of voltage measurement	2.5%
	Limits of accuracy of frequency measurement	0.050 Hz
	Maximum full power operating ambient temperature	50 °C (122 °F)
	Maximum air ambient temperature	50 °C (122 °F)
	Enclosure ratings	UL 50 Open Type
	Shipping temperature range	-40...+70 °C (-40...+158 °F)
	Operating temperature range	-10...+50 °C (+14...+122 °F)

Table 129. Technical data for European grid codes

DC Ratings	Maximum input/output voltage	NX xxxx 5: 800 V DC NX xxxx 6: 1100 V DC
	Range of input/output voltage	NX xxxx 5: 334–800 V DC (wake-up voltage: 436 V DC; with additional software license 334 V DC) NX xxxx 6: 508–1100 V DC (wake-up voltage: 603 V DC)
	Maximum input DC overcurrent protection	See Table 124 and Table 125
AC Ratings	Output - Grid configurations allowed for product connection	3 phase + PE
	Nominal (line to line) output/input voltage	NX xxxx 5: 180-500 V AC NX xxxx 6: 300-600 V AC
	Nominal output frequency	45–66 Hz
	Maximum continuous output/input current	See Table 130 and Table 131
	Maximum overcurrent protection	See Table 121 and Table 122

Table 129. Technical data for European grid codes

	Enclosure ratings	IP00
	Ambient operating temperature	-10 °C (no frost)...+50 °C (at I_{th}) The VACON® NX Liquid-cooled drives must be used in a heated indoor controlled environment.
	Storage temperature	-40...+70 °C No liquid in heat sink under 0 °C.
	Installation temperature	0...+70 °C

13.13.2 CURRENT AND POWER RATINGS

13.13.2.1 Current and power ratings - European grid codes

Table 130. Current and power ratings for VACON® NX Liquid-cooled drives (180–500 V)

Enclosure size	Type	Maximum continuous current rating (A) *	Nominal current rating (A) for grid code applications	Nominal power (kVA) at 400 V AC	Maximum power (kVA) at 400 V AC *
CH5	NX_0168 5	170	140	97	118
	NX_0205 5	205	170	118	142
	NX_0261 5	261	205	142	181
CH61	NX_0300 5	300	261	181	208
	NX_0385 5	385	300	208	267
CH62	NX_0460 5	460	385	267	319
	NX_0520 5	520	460	319	360
	NX_0590 5	590	520	360	409
	NX_0650 5	650	590	409	450
	NX_0730 5	730	650	450	506
CH63	NX_0820 5	820	730	506	568
	NX_0920 5	920	820	568	637
	NX_1030 5	1030	920	637	714
	NX_1150 5	1150	1030	714	797
CH64	NX_1370 5	1370	1150	797	949
	NX_1640 5	1640	1370	949	1136
	NX_2060 5	2060	1640	1136	1427
	NX_2300 5	2300	2060	1427	1593
2xCH64	NX_2470 5	2470	2300	1593	1711
	NX_2900 5	2950	2470	1711	2044
	NX_3710 5	3710	2950	2044	2570
	NX_4140 5	4140	3710	2570	2868

* Selection of Grid converter for grid code applications shall be done based on Nominal current ratings and Voltage at grid.

Table 131. Current and power ratings for VACON® NX Liquid-cooled drives (300–600 V)

Enclosure size	Type	Maximum continuous current rating (A) *	Nominal current rating (A) for grid code applications	Nominal power (kVA) at 600 V AC	Maximum power (kVA) at 600 V AC *
CH61	NX_0170 6	170	144	150	177
	NX_0208 6	208	170	177	216
	NX_0261 6	261	208	216	271
CH62	NX_0325 6	325	261	271	338
	NX_0385 6	385	325	338	400
	NX_0416 6	416	325	338	432
	NX_0460 6	460	385	400	478
	NX_0502 6	502	460	478	522
CH63	NX_0590 6	590	502	522	613
	NX_0650 6	650	590	613	675
	NX_0750 6	750	650	675	779
CH64	NX_0820 6	820	750	779	852
	NX_0920 6	920	820	852	956
	NX_1030 6	1030	920	956	1070
	NX_1180 6	1180	1030	1070	1226
	NX_1300 6	1300	1180	1226	1351
	NX_1500 6	1500	1300	1351	1559
	NX_1700 6	1700	1500	1559	1767
2xCH64	NX_1850 6	1850	1700	1767	1923
	NX_2120 6	2120	1850	1923	2203
	NX_2340 6	2340	2120	2203	2432
	NX_2700 6	2700	2340	2432	2806
	NX_3100 6	3100	2700	2806	3222

* Selection of Grid converter for grid code applications shall be done based on Nominal current ratings and Voltage at grid.

13.13.2.2 Current and power ratings - UL1741

Table 132. Current and power ratings for VACON® NX Liquid-cooled drives (400-600 V)

Enclosure size	Type	Max. input/ output operating current (A DC)	Max. continuous output/input current (A AC) - Stand-alone inverter	Max. continuous output/input current (A AC) - Utility interactive inverter	Max. continuous AC power (W) @600 V AC - Utility interactive inverter
CH61	NX_0170 6	199	170	144	149 649
	NX_0208 6	244	208	170	176 669
	NX_0261 6	309	261	208	216 160

Table 132. Current and power ratings for VACON® NX Liquid-cooled drives (400-600 V)

Enclosure size	Type	Max. input/ output operating current (A DC)	Max. continuous output/input current (A AC) - Stand-alone inverter	Max. continuous output/input current (A AC) - Utility interactive inverter	Max. continuous AC power (W) @600 V AC - Utility interactive inverter
CH62	NX_0325 6	385	325	261	271 239
	NX_0385 6	456	385	325	337 750
	NX_0416 6	493	416	385	400 104
	NX_0460 6	545	460	416	432 320
	NX_0502 6	595	502	460	478 046
CH63	NX_0590 6	699	590	502	521 694
	NX_0650 6	770	650	590	613 146
	NX_0750 6	889	750	650	675 500
CH64	NX_0820 6	972	820	750	779 423
	NX_0920 6	1090	920	820	852 169
	NX_1030 6	1221	1030	920	956 092
	NX_1180 6	1414	1180	1030	1 070 407
	NX_1300 6	1558	1300	1180	1 226 292
	NX_1500 6	1798	1500	1300	1 351 000
	NX_1700 6	2040	1700	1500	1 558 846
2xCH64	NX_1850 6	2193	1850	1700	1 766 692
	NX_2120 6	2513	2120	1850	1 922 576
	NX_2340 6	2774	2340	2120	2 203 169
	NX_2700 6	3236	2700	2340	2 431 799
	NX_3100 6	3715	3100	2700	2 805 922

13.13.3 CONFIGURATION CIRCUIT DIAGRAMS

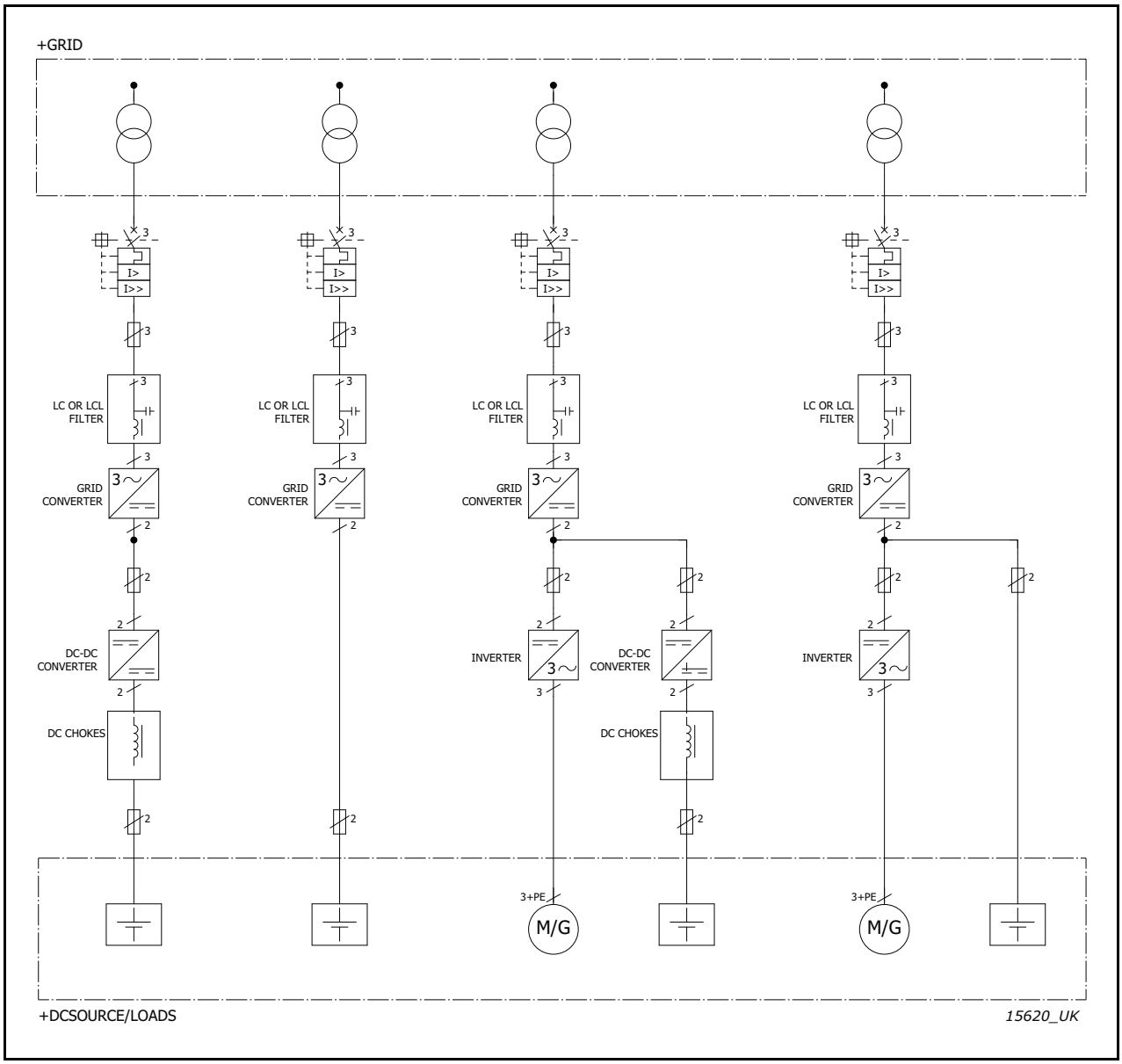

Figure 131. Single line diagrams of grid converter configurations for European grid codes

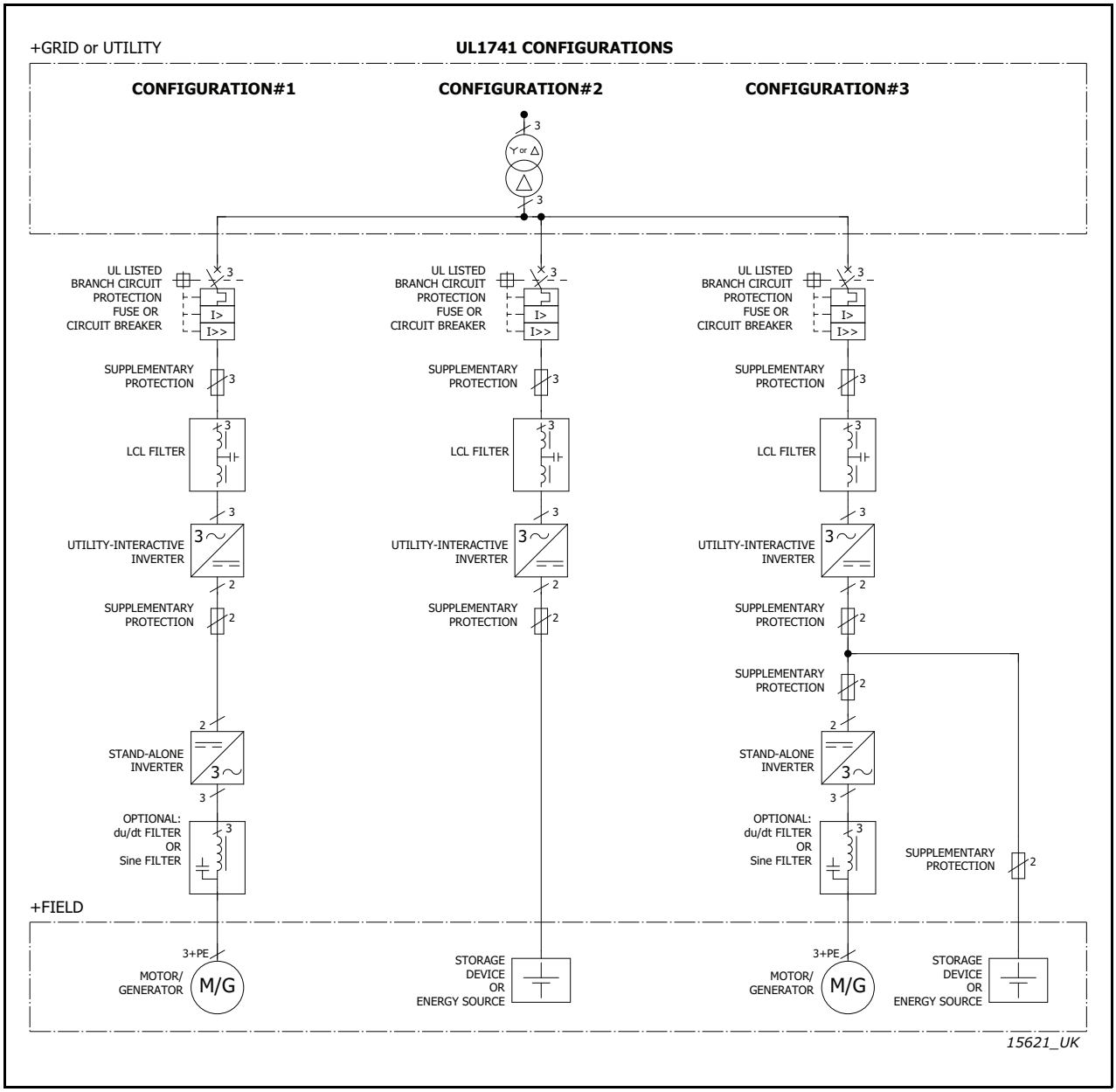

Figure 132. Single line diagrams of grid converter configurations for UL1741

14. APPENDIX

14.1 CIRCUIT DIAGRAMS

VACON® NX Liquid-cooled AC drive and inverter main circuit and control diagrams

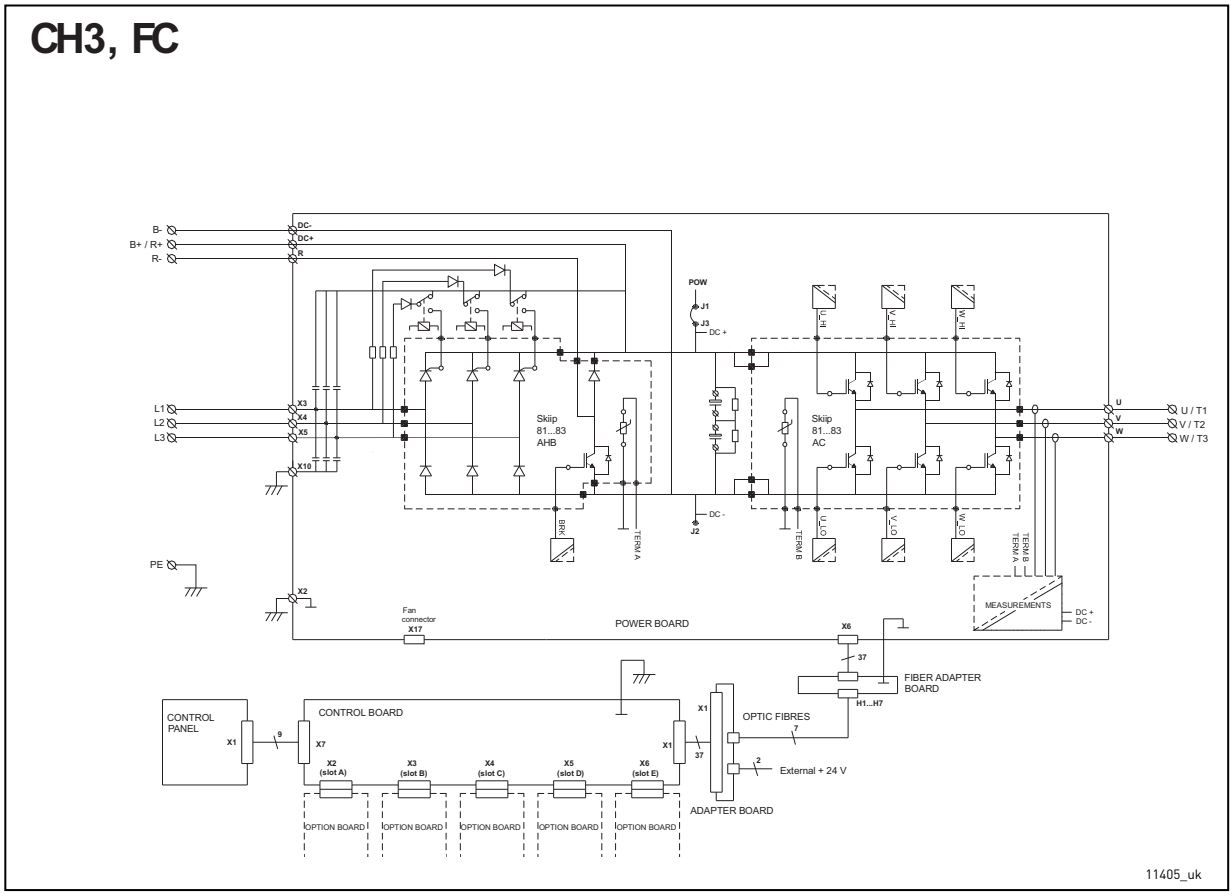

CH4, FC

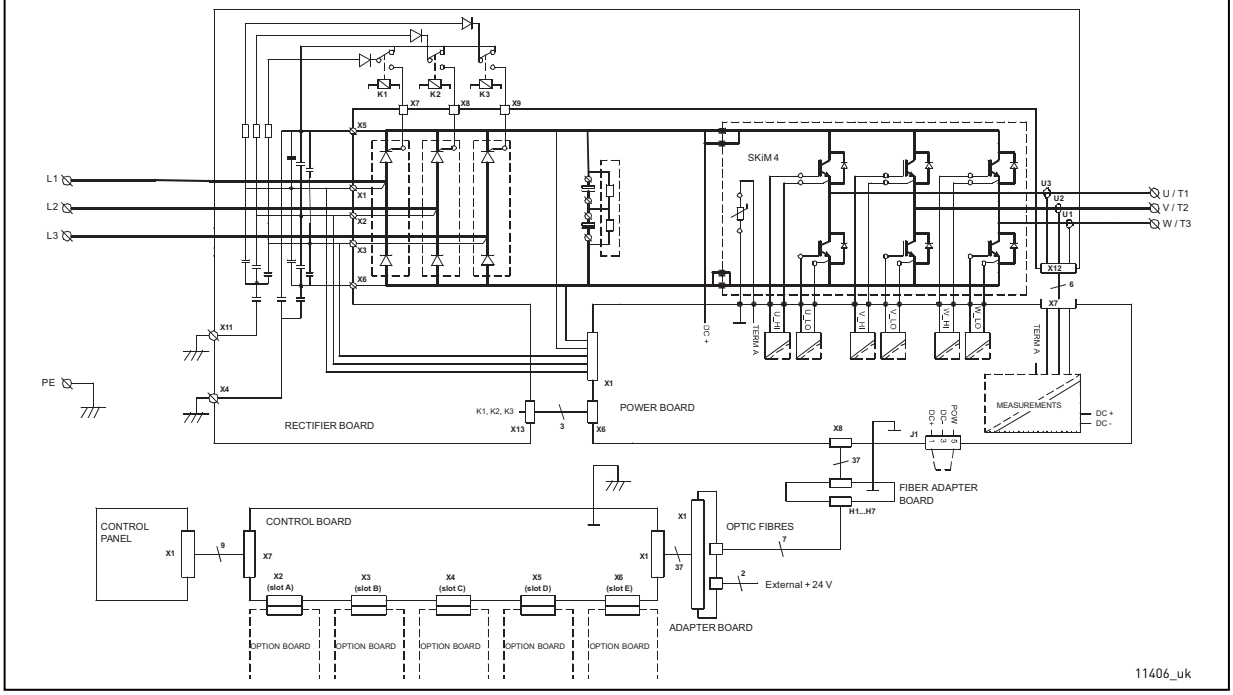
L1
L2
L3
PE
K1
K2
K3
X5
X1
X2
X3
X6
X11
X4
SKiM 4
U3
U2
U1
U / T1
V / T2
W / T3
X12
X7
DC +
TERM A
RECTIFIER BOARD
K1, K2, K3
X13
POWER BOARD
X8
J1
MEASUREMENTS
DC +
DC -
FIBER ADAPTER BOARD
H1...H7
CONTROL PANEL
CONTROL BOARD
OPTIC FIBRES
External + 24 V
ADAPTER BOARD
X2 (slot A)
X3 (slot B)
X4 (slot C)
X5 (slot D)
X6 (slot E)
OPTION BOARD
11406_uk

CH5, FC

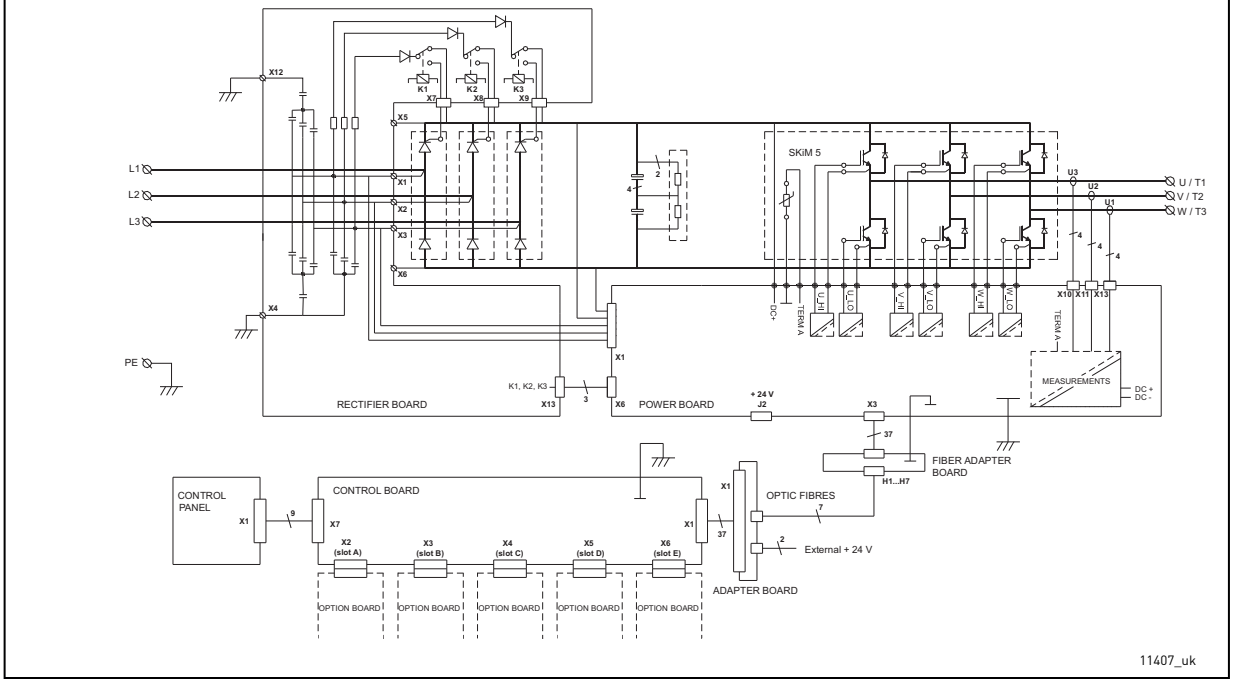
L1
L2
L3
PE
X12
K1
K2
K3
X5
X1
X2
X3
X6
X4
SKiM 5
U3
U2
U1
U / T1
V / T2
W / T3
X10
X11
X13
DC +
TERM A
RECTIFIER BOARD
K1, K2, K3
X13
POWER BOARD
+ 24 V
J2
MEASUREMENTS
DC +
DC -
FIBER ADAPTER BOARD
H1...H7
CONTROL PANEL
CONTROL BOARD
OPTIC FIBRES
External + 24 V
ADAPTER BOARD
X2 (slot A)
X3 (slot B)
X4 (slot C)
X5 (slot D)
X6 (slot E)
OPTION BOARD
11407_uk

L/C NFE

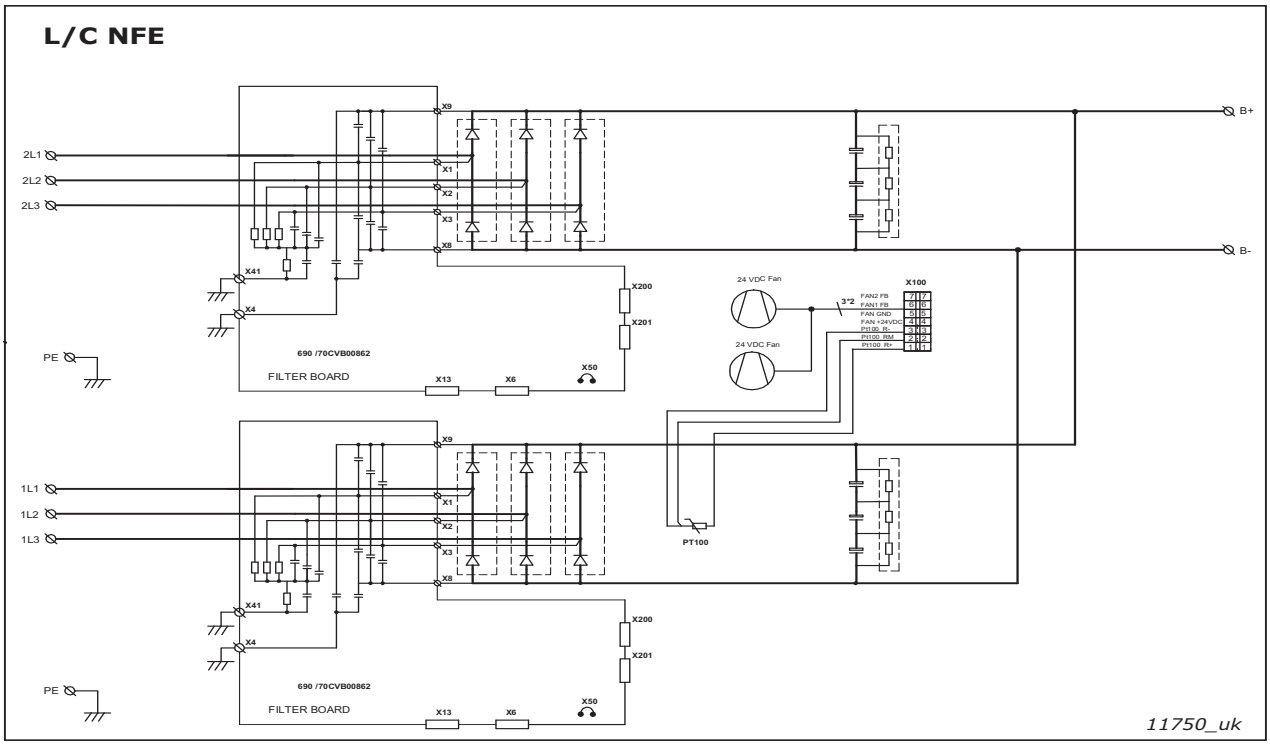

CH61, FC

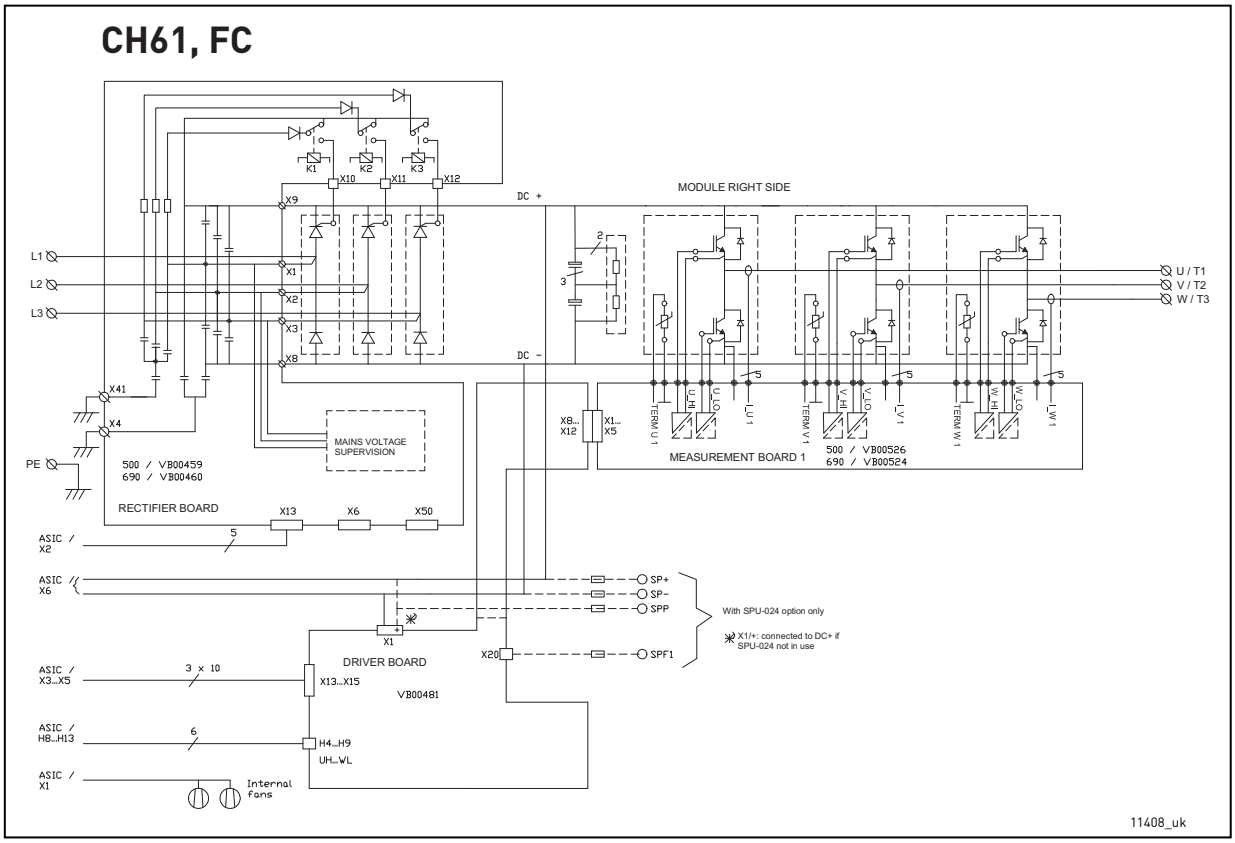

CH61, FC, CONTROL

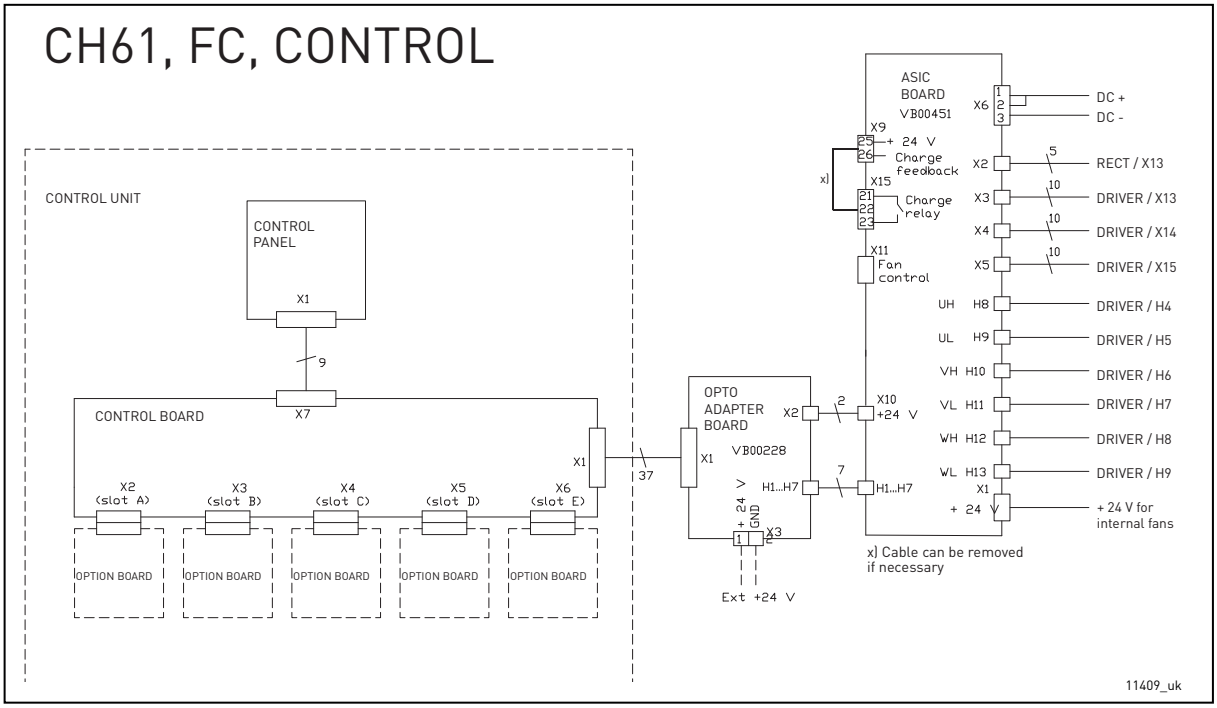

CH61, INVERTER

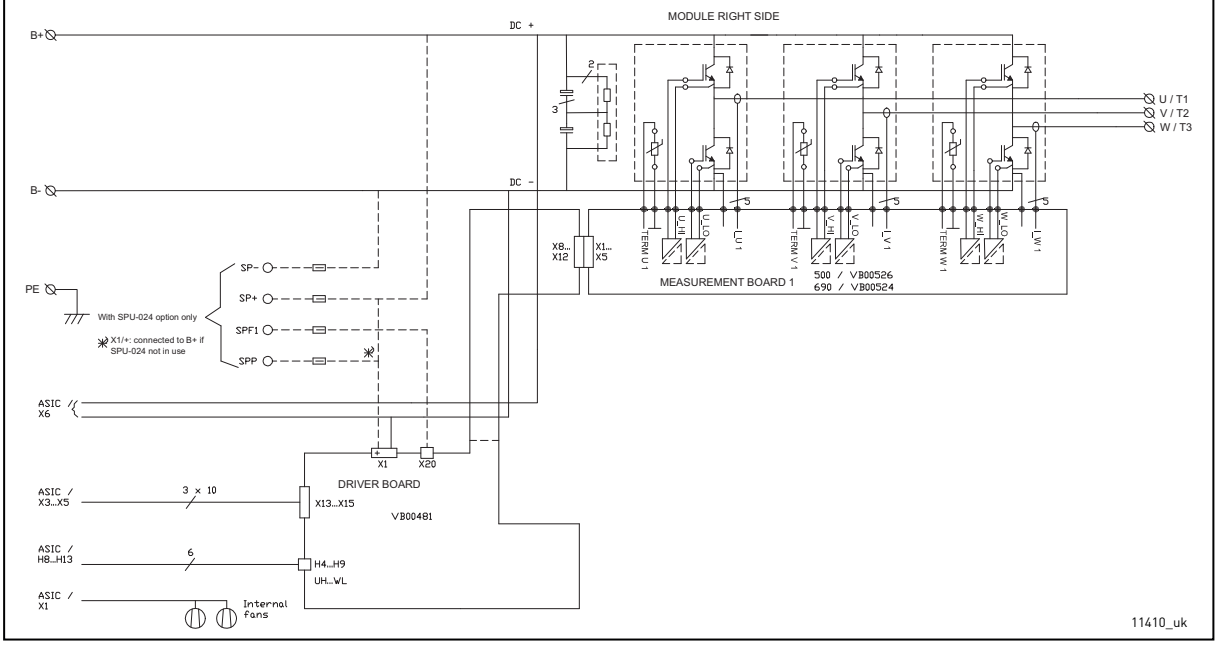

CH61, INVERTER, CONTROL

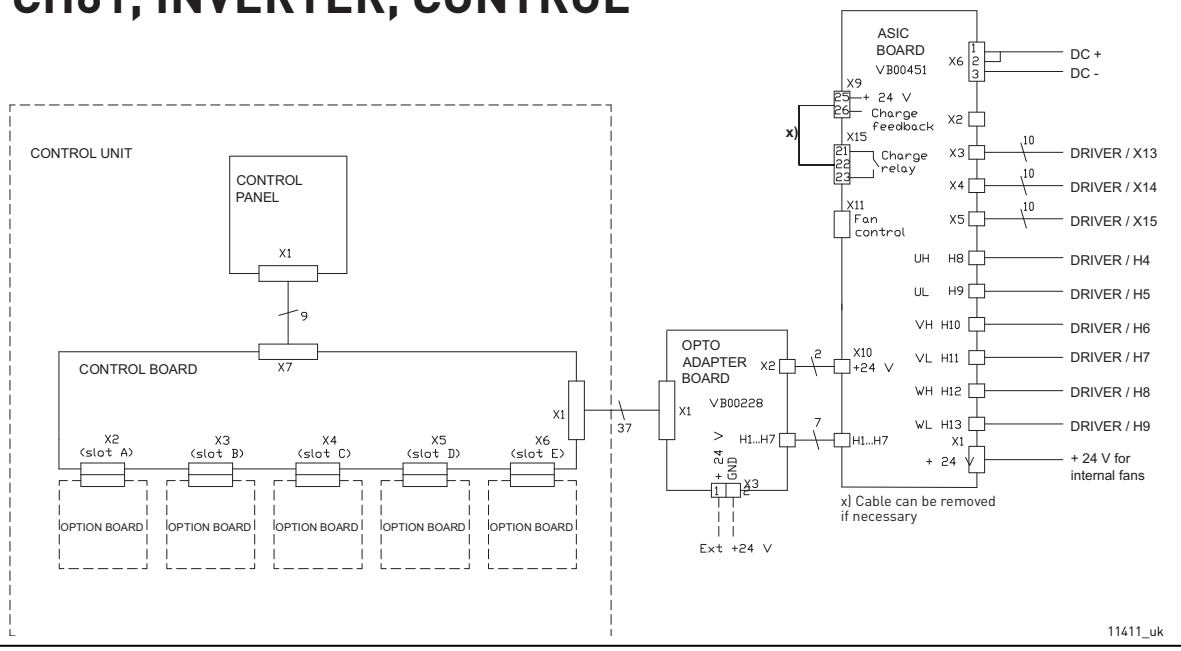

CH62, INVERTER

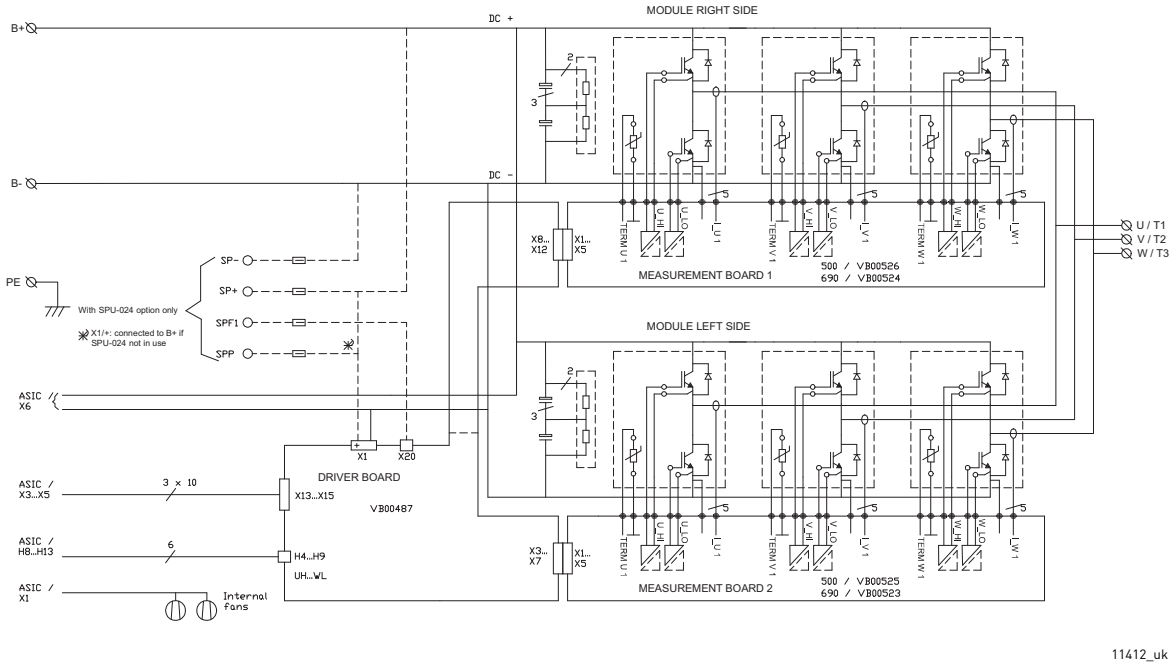

CH62, INVERTER, CONTROL

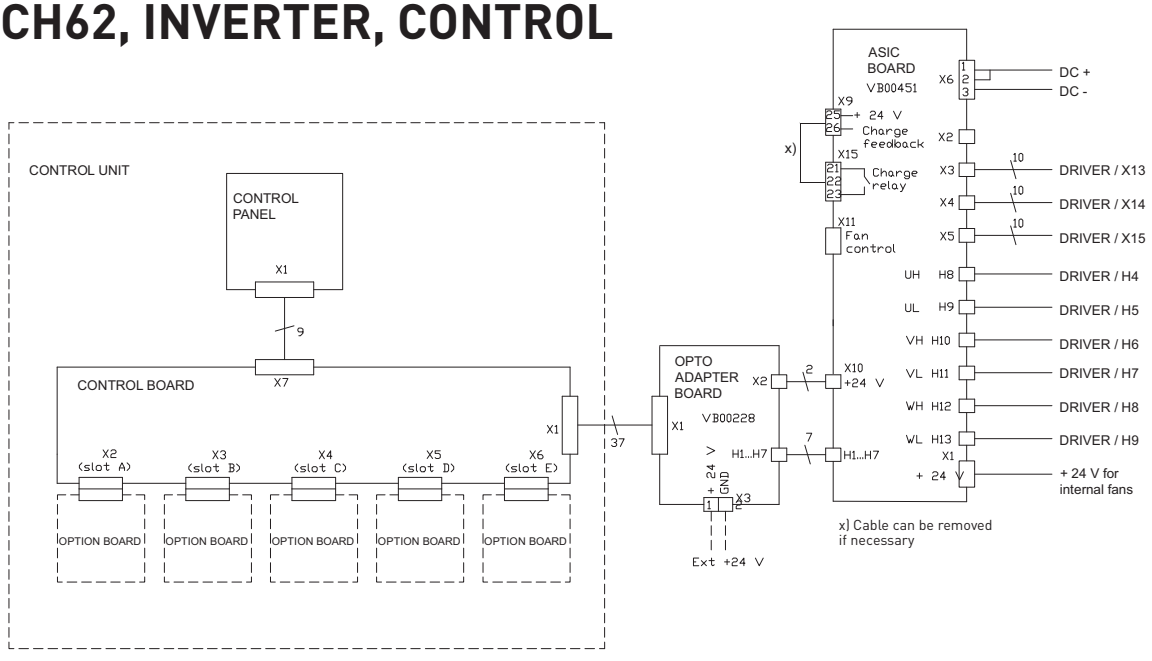

CH63, FC, MODULE 1

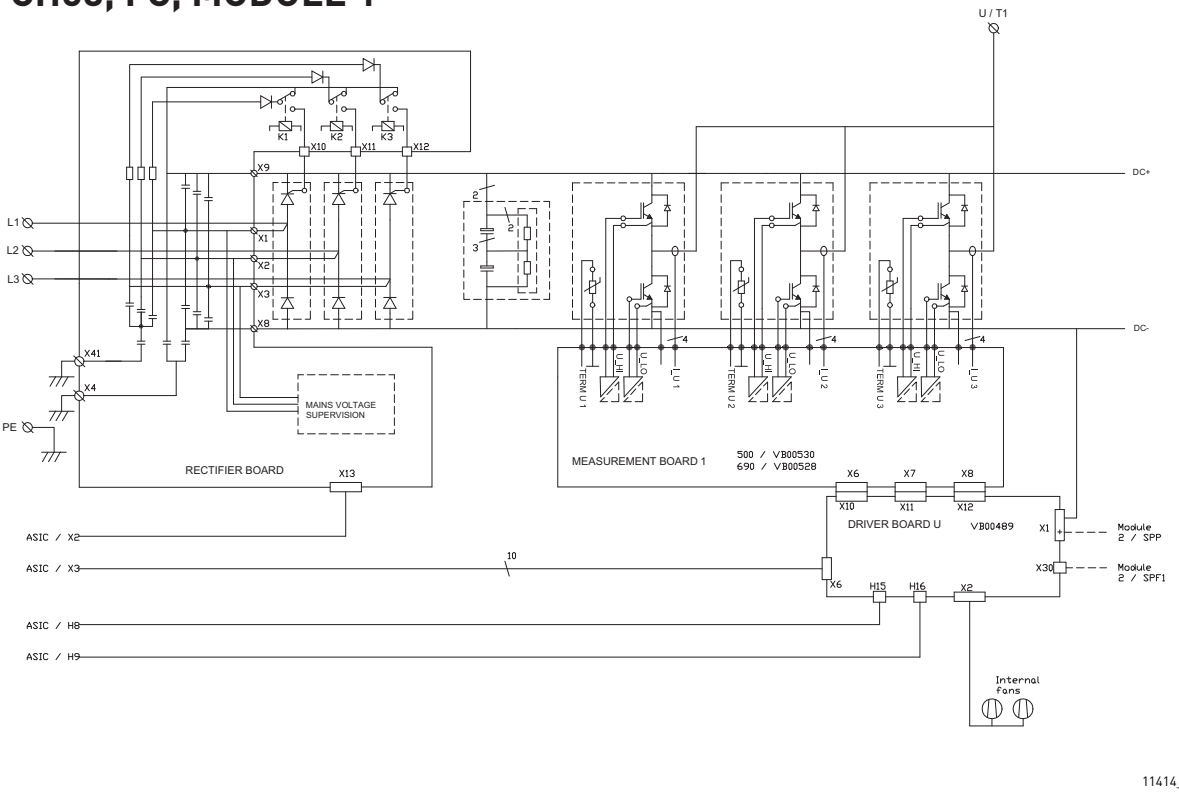

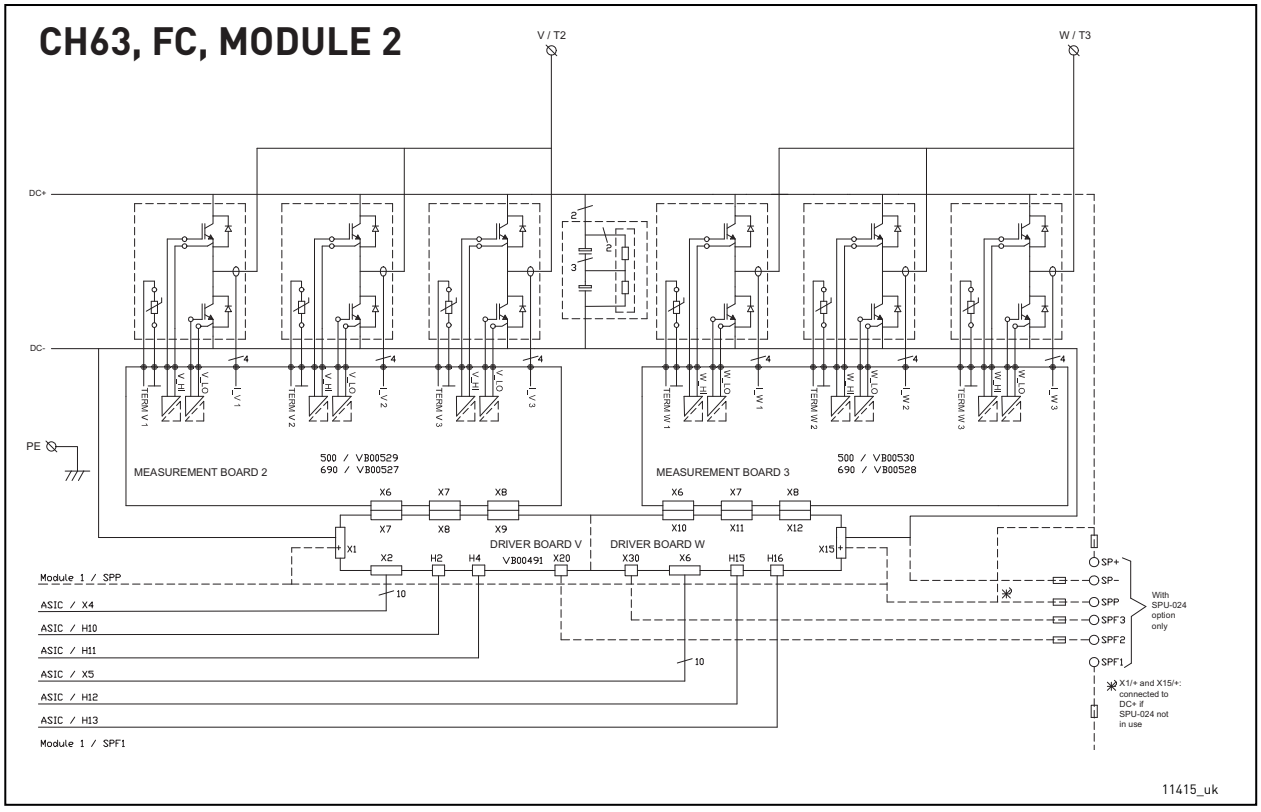
CH63, FC, MODULE 2
V / T2
W / T3
DC+
DC-
PE
MEASUREMENT BOARD 2
500 / VB00529
690 / VB00527
MEASUREMENT BOARD 3
500 / VB00530
690 / VB00528
DRIVER BOARD V
VB00491
DRIVER BOARD W
Module 1 / SPP
ASIC / X4
ASIC / H10
ASIC / H11
ASIC / X5
ASIC / H12
ASIC / H13
Module 1 / SPF1
SP+
SP-
SPP
SPF3
SPF2
SPF1
With SPU-024 option only
X1/+ and X15/+: connected to DC+ if SPU-024 not in use
11415_uk

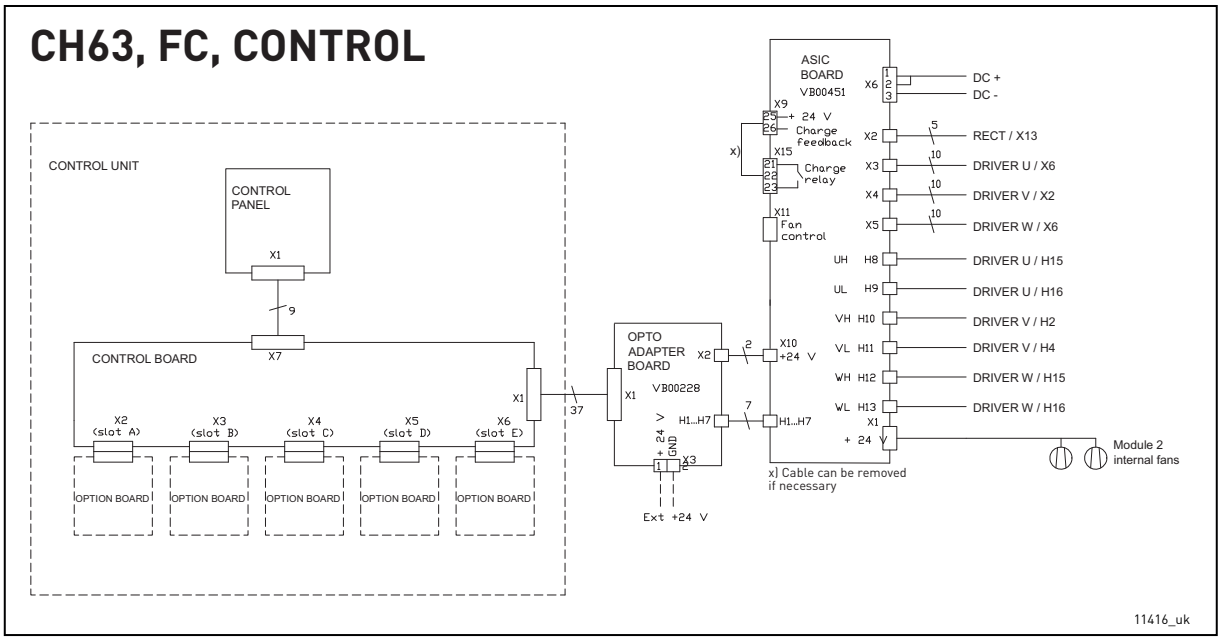
CH63, FC, CONTROL
CONTROL UNIT
CONTROL PANEL
CONTROL BOARD
OPTION BOARD
OPTO ADAPTER BOARD
VB00228
ASIC BOARD
VB00451
+ 24 V
Charge feedback
Charge relay
Fan control
DC +
DC -
RECT / X13
DRIVER U / X6
DRIVER V / X2
DRIVER W / X6
DRIVER U / H15
DRIVER U / H16
DRIVER V / H2
DRIVER V / H4
DRIVER W / H15
DRIVER W / H16
Module 2 internal fans
x) Cable can be removed if necessary
Ext +24 V
11416_uk

CH63, INVERTER, MODULE 1

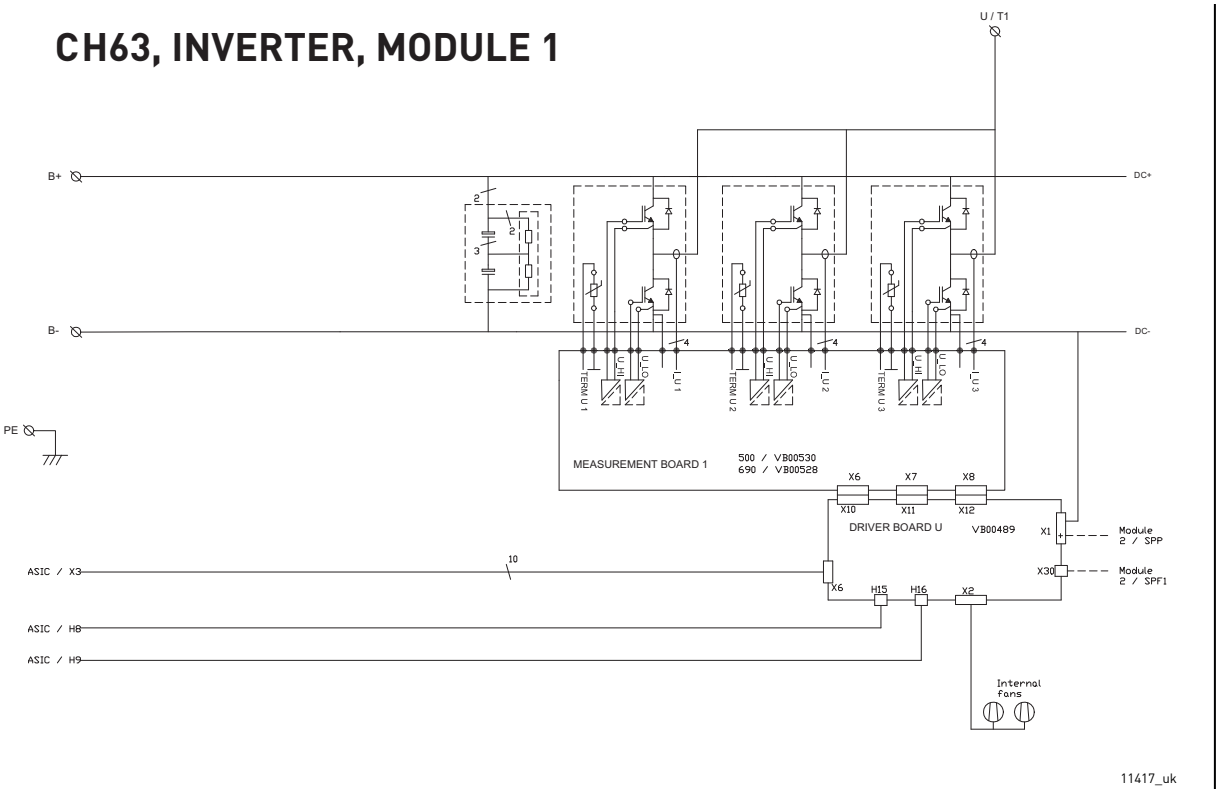

CH63, INVERTER, MODULE 2

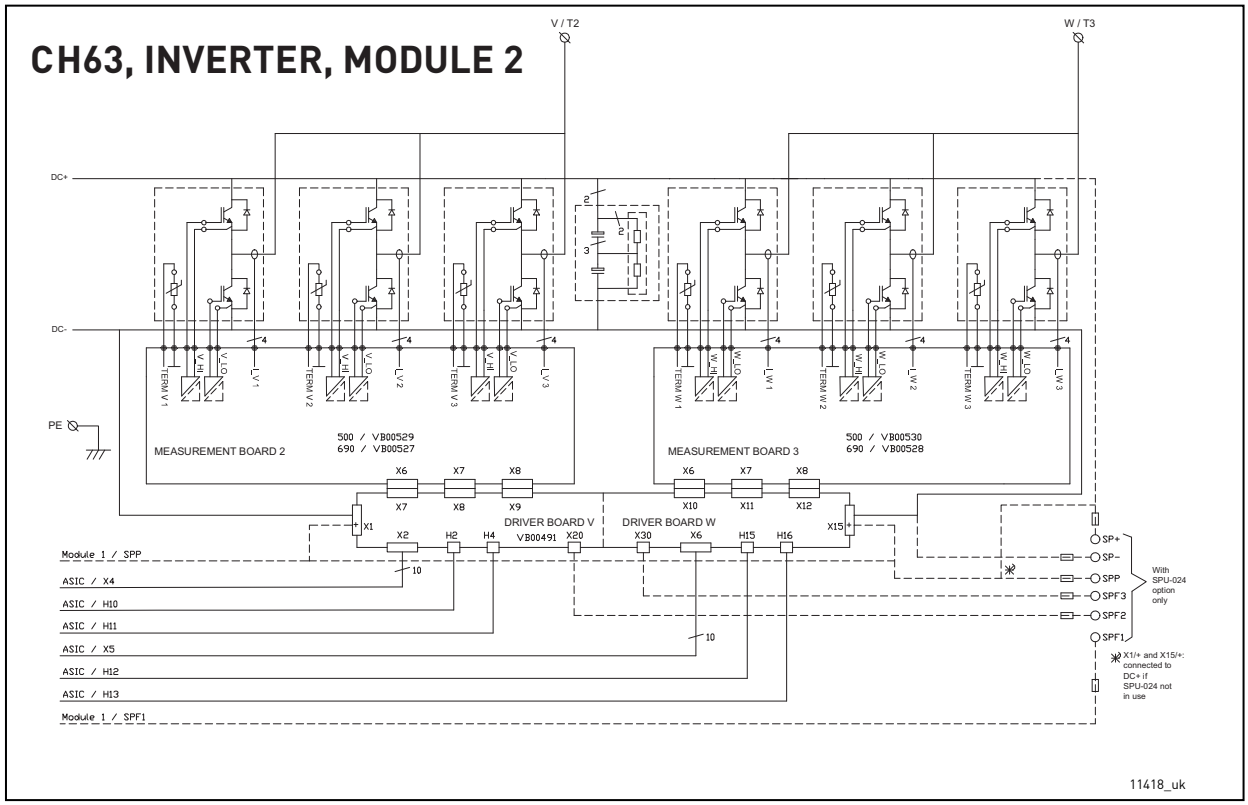

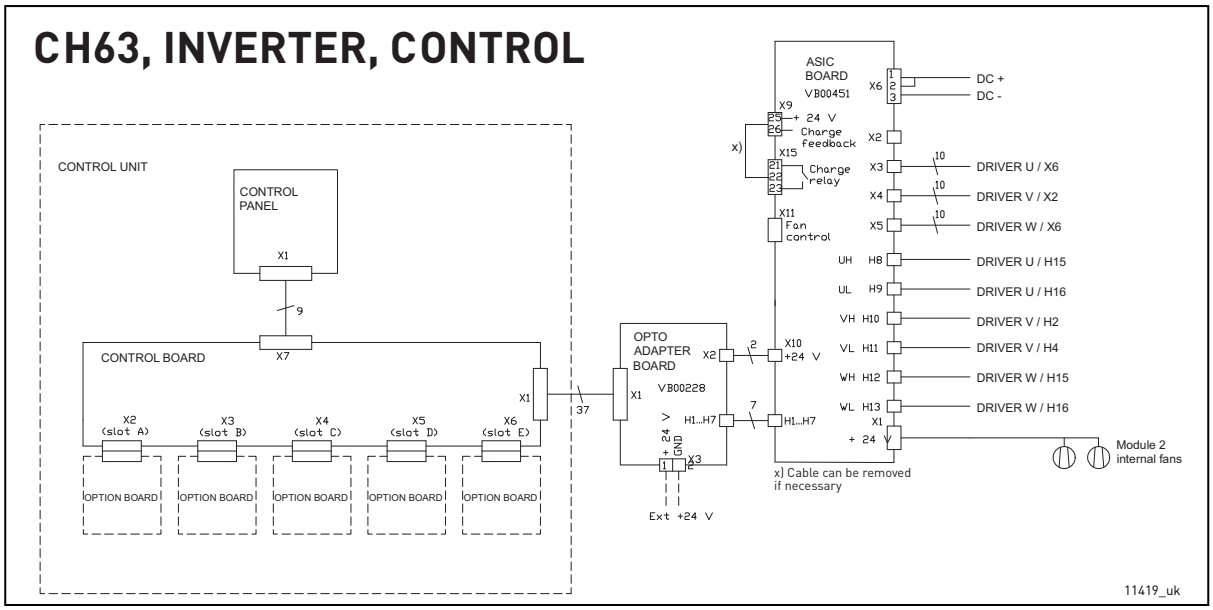
CH63, INVERTER, CONTROL
CONTROL UNIT
CONTROL PANEL
X1
9
X7
CONTROL BOARD
X1
37
X2 (slot A)
X3 (slot B)
X4 (slot C)
X5 (slot D)
X6 (slot E)
OPTION BOARD
OPTION BOARD
OPTION BOARD
OPTION BOARD
OPTION BOARD
OPTO ADAPTER BOARD
VB00228
X1
X2
2
7
H1...H7
+ 24 V
GND
X3
Ext +24 V
ASIC BOARD
VB00451
X6
DC +
DC -
X9
+ 24 V
Charge feedback
X15
Charge relay
X11
Fan control
X2
X3
X4
X5
10
DRIVER U / X6
DRIVER V / X2
DRIVER W / X6
UH H8
UL H9
VH H10
VL H11
WH H12
WL H13
DRIVER U / H15
DRIVER U / H16
DRIVER V / H2
DRIVER V / H4
DRIVER W / H15
DRIVER W / H16
X10
+24 V
H1...H7
X1
+ 24 V
Module 2 internal fans
x) Cable can be removed if necessary
11419_uk

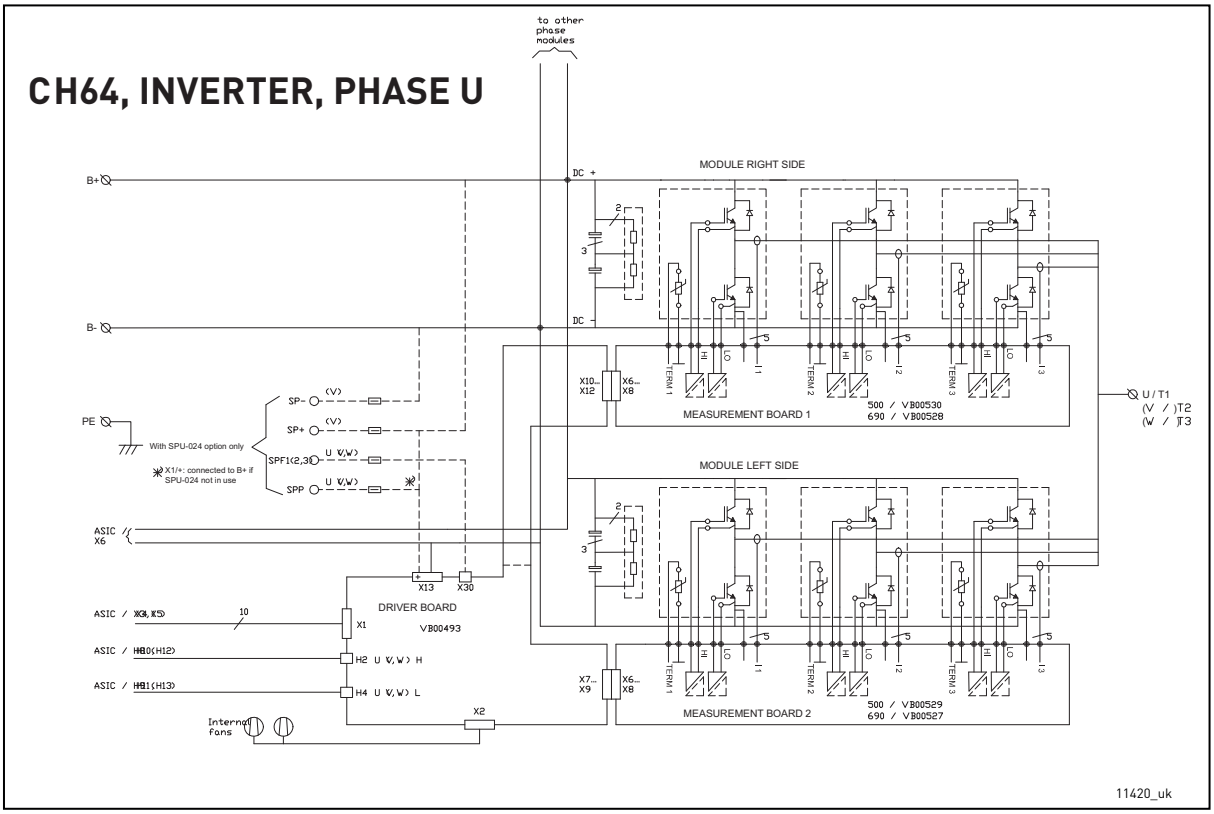
CH64, INVERTER, PHASE U
to other phase modules
B+
B-
PE
DC +
DC -
MODULE RIGHT SIDE
MODULE LEFT SIDE
MEASUREMENT BOARD 1
MEASUREMENT BOARD 2
500 / VB00530
690 / VB00528
500 / VB00529
690 / VB00527
TERM 1
TERM 2
TERM 3
HI
LO
I1
I2
I3
X10... X12
X6... X8
X7... X9
U / T1
(V /)T2
(W /)T3
SP-
SP+
SPF1(2,3)
SPP
(V)
U (V,W)
With SPU-024 option only
X1/+: connected to B+ if SPU-024 not in use
ASIC / X6
X13
X30
DRIVER BOARD
VB00493
X1
H2 U (V,W) H
H4 U (V,W) L
X2
Internal fans
11420_uk

CH64, INVERTER, CONTROL

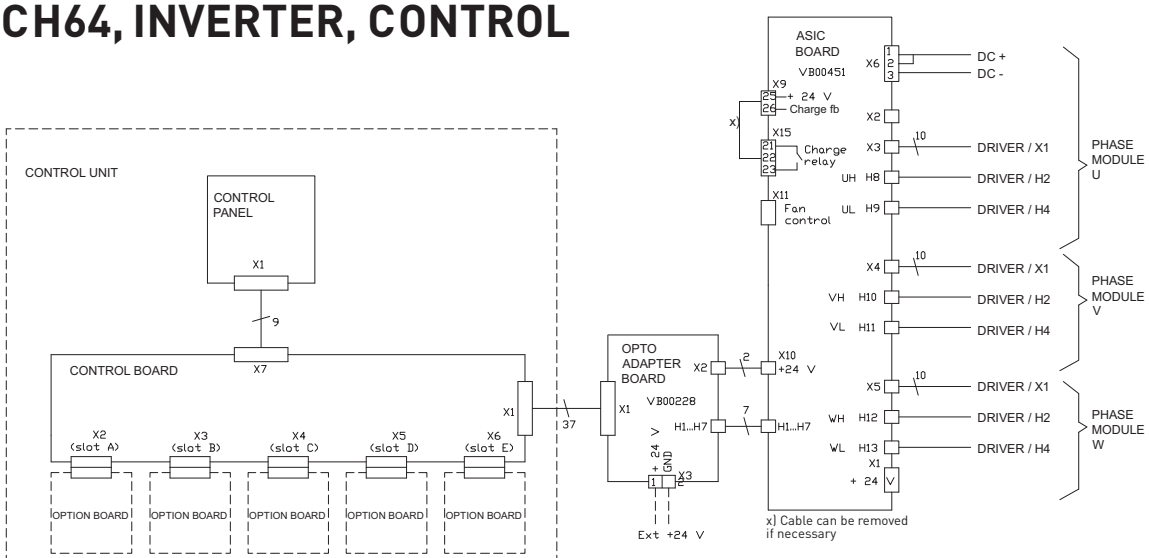

CH72, FC

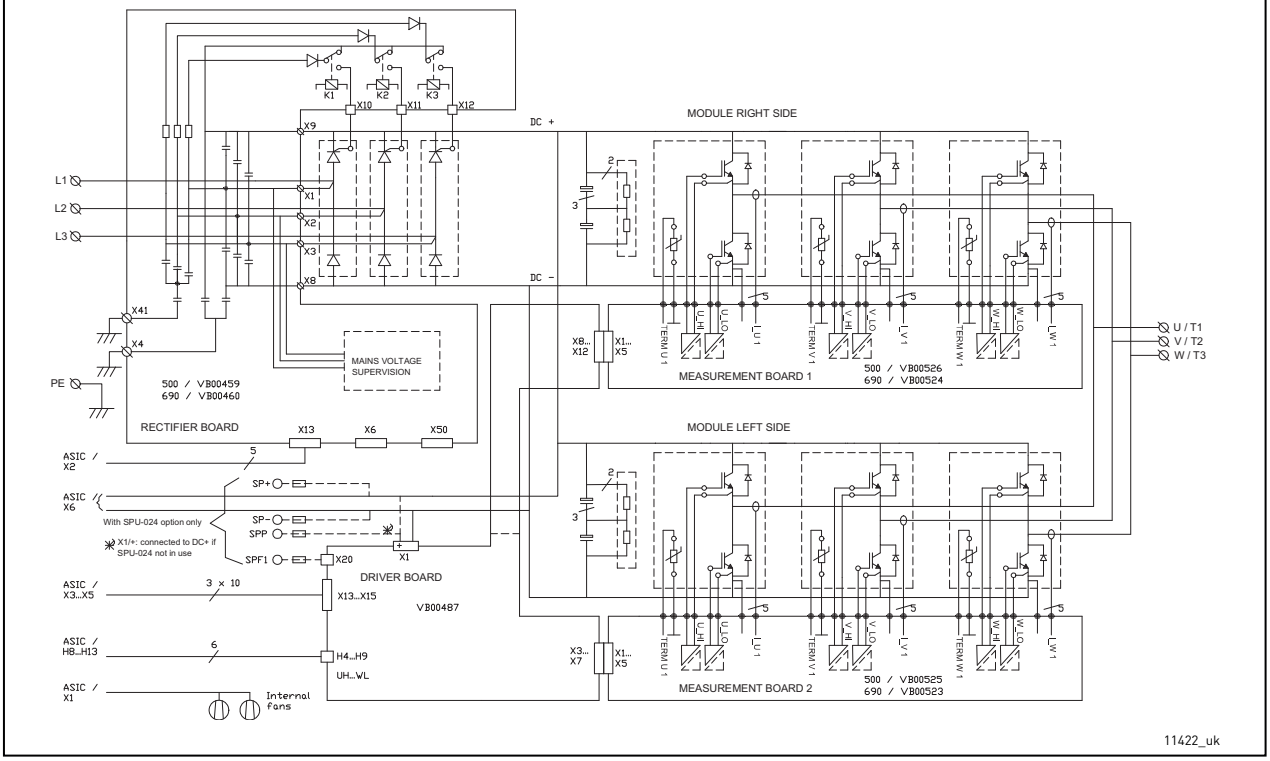

CH72, FC, CONTROL

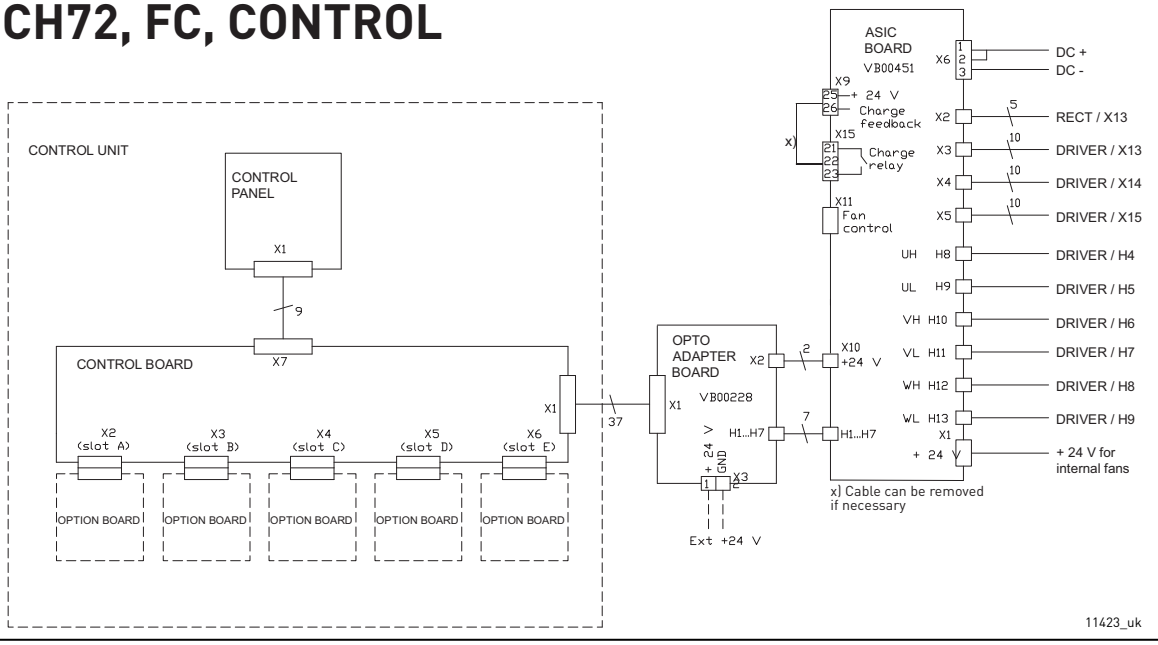

CH74, FC, PHASE U

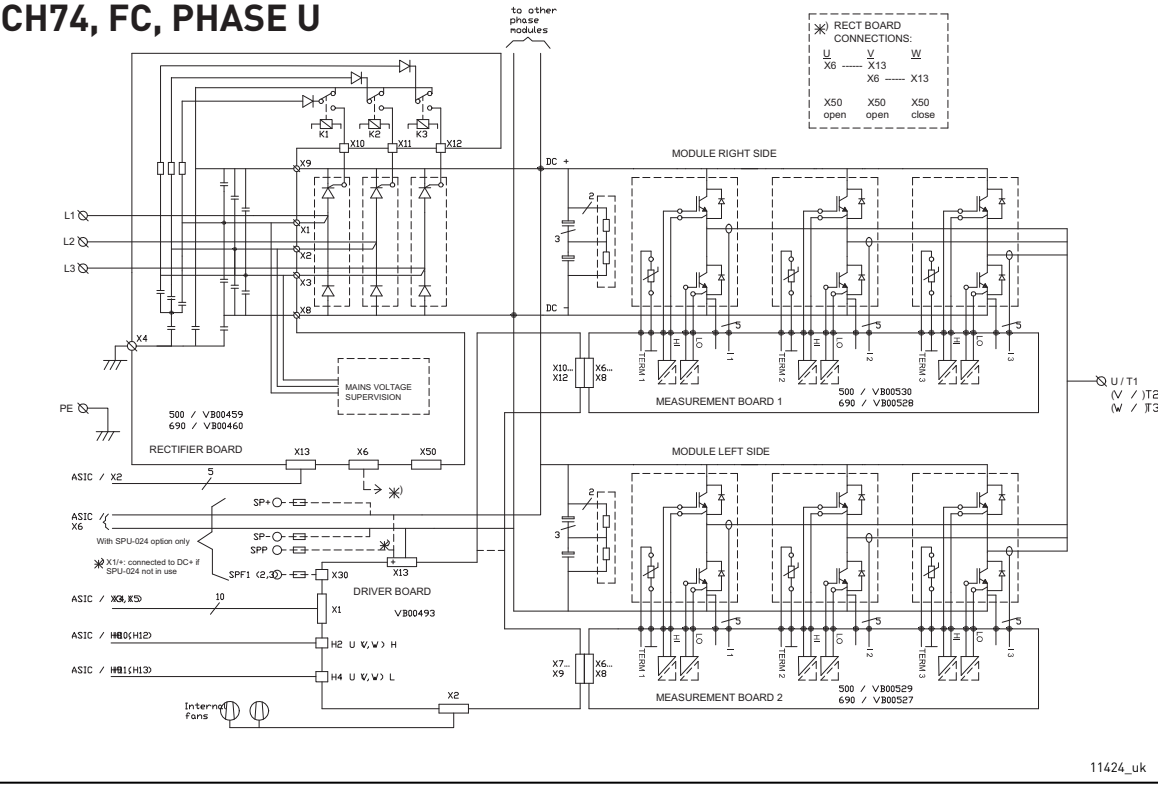

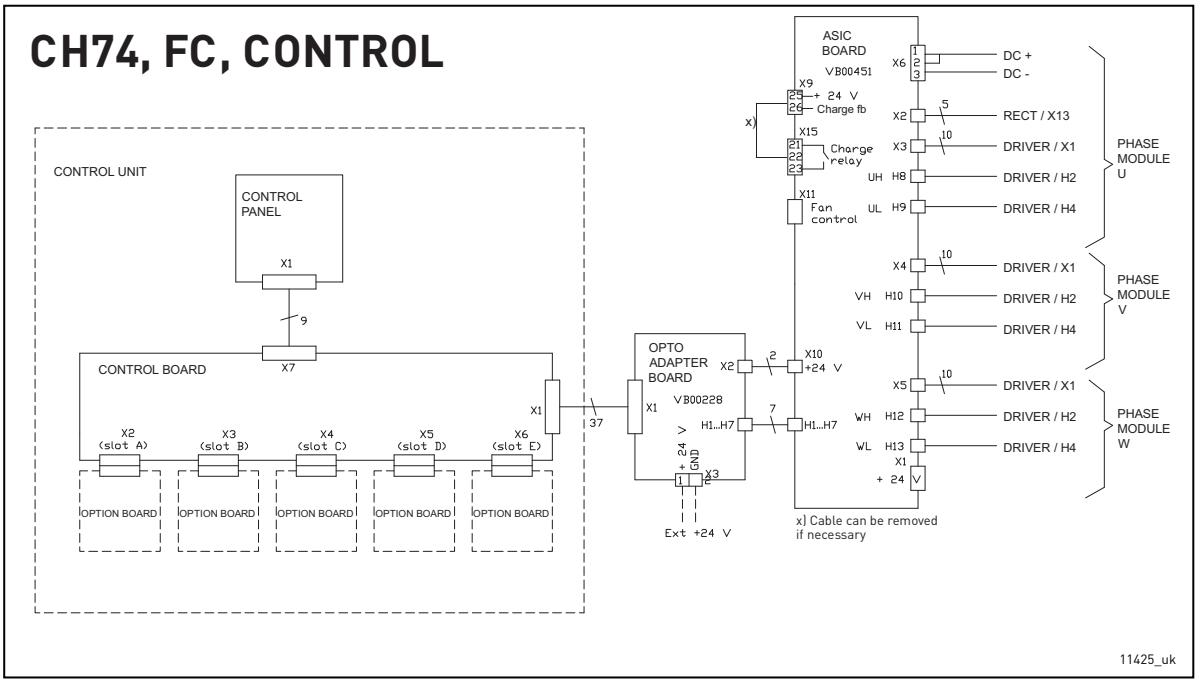
CH74, FC, CONTROL
CONTROL UNIT
CONTROL PANEL
X1
9
X7
CONTROL BOARD
X1
37
X2 (slot A)
X3 (slot B)
X4 (slot C)
X5 (slot D)
X6 (slot E)
OPTION BOARD
OPTO ADAPTER BOARD
X2
X1
VB00228
H1...H7
+ 24
GND
X3
Ext +24 V
2
X10
+24 V
7
H1...H7
ASIC BOARD
VB00451
X9
+ 24 V
Charge fb
X15
Charge relay
X11
Fan control
X)
X6
DC +
DC -
X2
RECT / X13
X3
DRIVER / X1
UH H8
DRIVER / H2
UL H9
DRIVER / H4
PHASE MODULE U
X4
DRIVER / X1
VH H10
DRIVER / H2
VL H11
DRIVER / H4
PHASE MODULE V
X5
DRIVER / X1
WH H12
DRIVER / H2
WL H13
DRIVER / H4
PHASE MODULE W
X1
+ 24 V
x) Cable can be removed if necessary
11425_uk

14.2 OETL, OFAX, AND CHARGING CIRCUIT

OETL2500 + OFAX3 + Charging circuit for VACON® NX Liquid-cooled inverters 1640_5 to 2300_5 (3 diagrams)

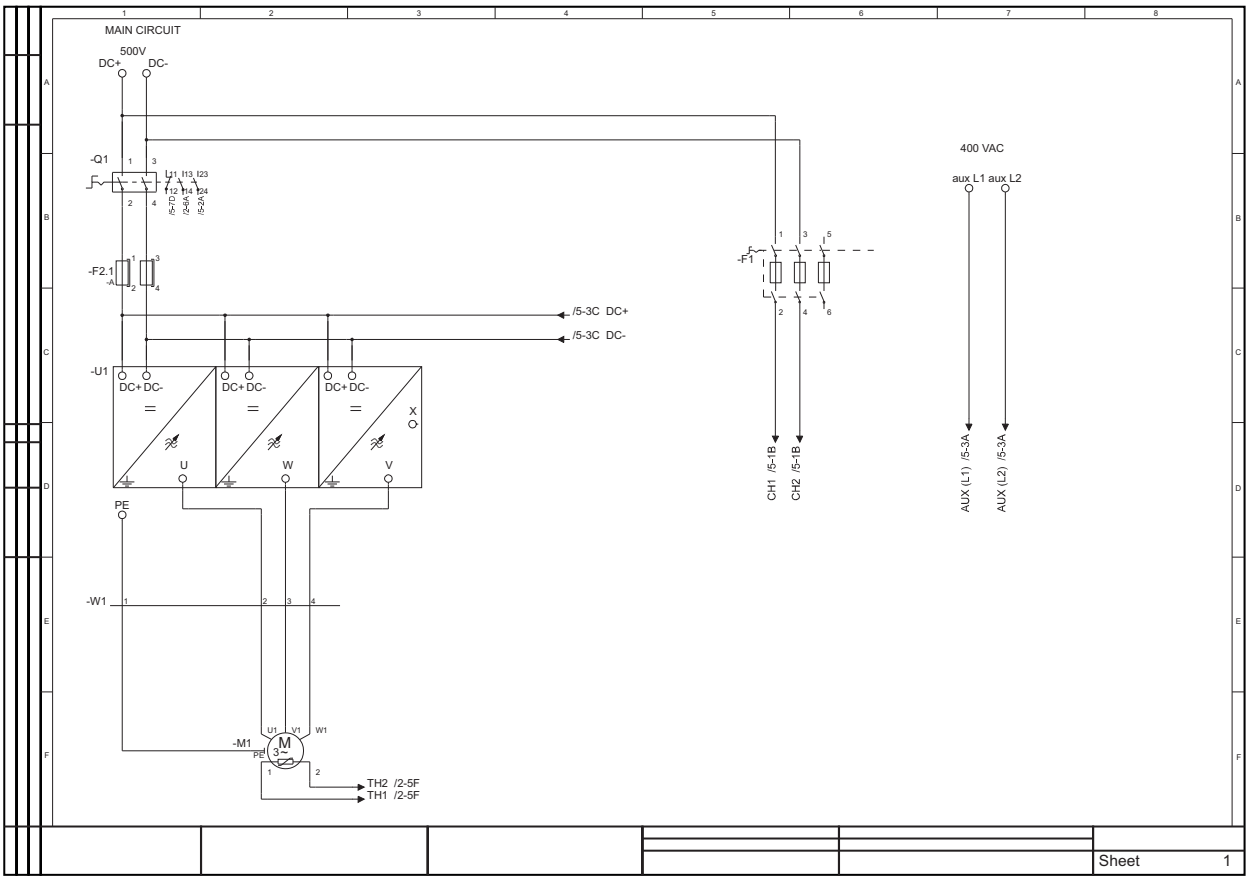

11426_00

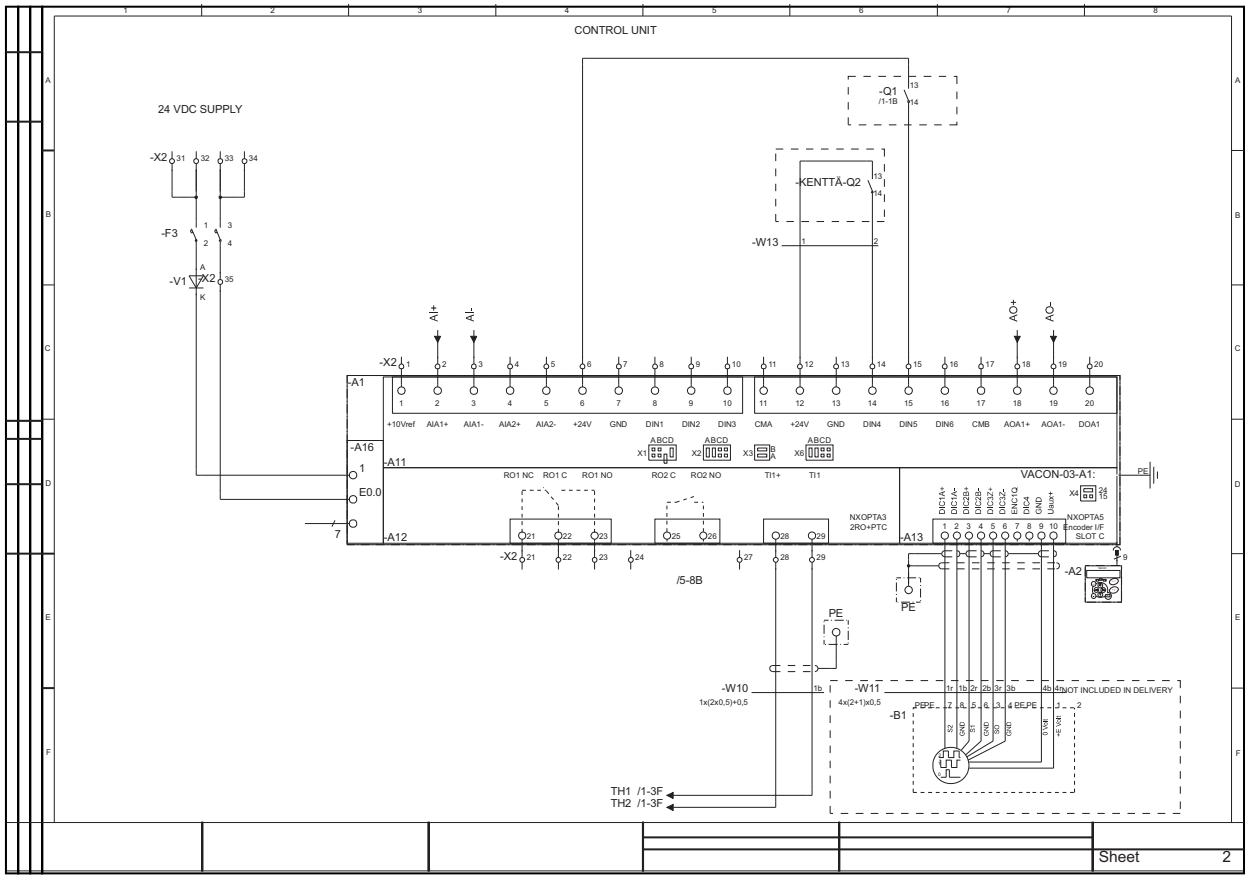
CONTROL UNIT
24 VDC SUPPLY
-X2
-F3
-V1
-Q1
/1-1B
-KENTTÄ-Q2
-W13
AI+
AI-
AO+
AO-
-A1
+10Vref AIA1+ AIA1- AIA2+ AIA2- +24V GND DIN1 DIN2 DIN3 CMA +24V GND DIN4 DIN5 DIN6 CMB AOA1+ AOA1- DOA1
-A16
-A11
-A12
-A13
-A2
RO1 NC RO1 C RO1 NO RO2 C RO2 NO TI1+ TI1
NXOPTA3
2RO+PTC
VACON-03-A1:
NXOPTA5
Encoder I/F
SLOT C
/5-8B
PE
-W10
1x(2x0,5)+0,5
-W11
4x(2+1)x0,5
NOT INCLUDED IN DELIVERY
-B1
TH1 /1-3F
TH2 /1-3F
Sheet 2

11427 00

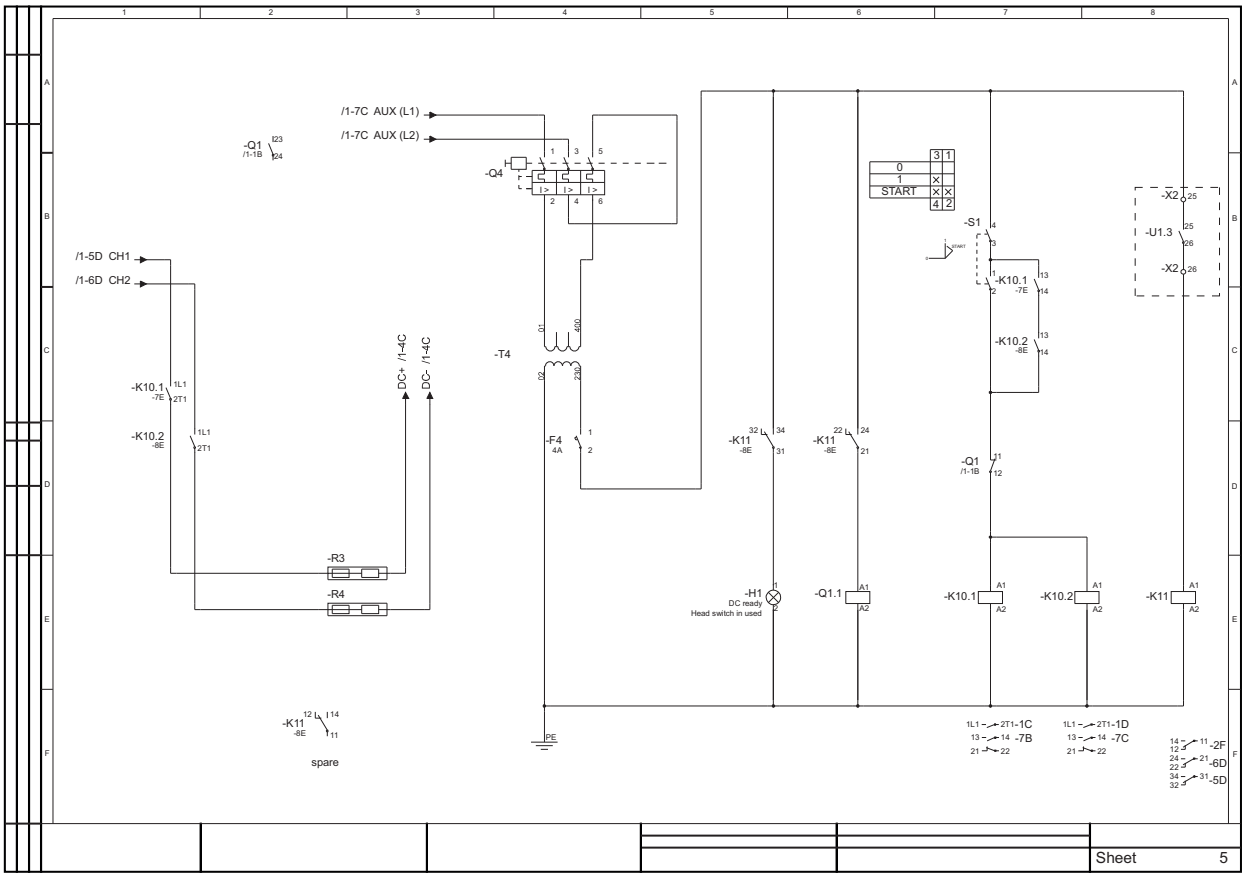
/1-7C AUX (L1)
/1-7C AUX (L2)
-Q1
/1-1B
-Q4
/1-5D CH1
/1-6D CH2
-K10.1
-7E
-K10.2
-8E
-T4
DC+ /1-4C
DC- /1-4C
-F4
4A
-R3
-R4
-K11
-8E
spare
PE
-H1
DC ready
Head switch in used
-Q1.1
-S1
START
-K10.1
-7E
-K10.2
-8E
-X2
-U1.3
-X2
-K10.1
-K10.2
-K11
-1C
-7B
-1D
-7C
-2F
-6D
-5D
Sheet 5

14.3 FUSE SIZES

Fuse information: Fuse sizes, Bussman aR fuses

Maximum fuse ambient temperature +50 ºC.

Fuse sizes can differ in the same chassis. Make sure that the Isc of the supply transformer is high enough to burn fuses fast enough.

To ensure fuse performance, make sure that the available supply short circuit current is sufficient. See the minimum required short circuit current ($I_{cp,mr}$) in the fuse tables.

Check the current rating of the fuse bases according to the input current of the drive.

The physical size of the fuse is chosen on the basis of the fuse current: Current < 400 A (size 2 fuse or smaller), current > 400 A (size 3 fuse).

Table 133. Fuse sizes (Bussman aR) for VACON® NX Liquid-cooled (500 V) AC drives

Chassis	Type	I_{th} [A]	Min. short circuit current $I_{cp,mr}$ [A]	DIN43620		DIN43653 (80 mm)		DIN43653 (110 mm)		Fuse U_n [V]	Fuse I_n [A]	Qty. of fuses per phase 3~/6~
				aR fuse part nr.	Fuse size	aR fuse part nr.	Fuse size	aR fuse part nr.	Fuse size			
CH3	0016	16	250	170M1565	DIN000	170M1415	000T/80			690	63	1
CH3	0022	22	250	170M1565	DIN000	170M1415	000T/80			690	63	1
CH3	0031	31	250	170M1565	DIN000	170M1415	000T/80			690	63	1
CH3	0038	38	250	170M1565	DIN000	170M1415	000T/80			690	63	1
CH3	0045	45	450	170M1567	DIN000	170M1417	000T/80			690	100	1
CH3	0061	61	450	170M1567	DIN000	170M1417	000T/80			690	100	1
CH4	0072	72	850	170M3815	DIN1[1]	170M3065	1*TN/80	170M3215	1*TN/110	690	200	1
CH4	0087	87	850	170M3815	DIN1[1]	170M3065	1*TN/80	170M3215	1*TN/110	690	200	1
CH4	0105	105	850	170M3815	DIN1[1]	170M3065	1*TN/80	170M3215	1*TN/110	690	200	1
CH4	0140	140	850	170M3815	DIN1[1]	170M3065	1*TN/80	170M3215	1*TN/110	690	200	1
CH5	0168	168	2200	170M3819	DIN1[1]	170M3069	1*TN/80	170M3219	1*TN/110	690	400	1
CH5	0205	205	2200	170M3819	DIN1[1]	170M3069	1*TN/80	170M3219	1*TN/110	690	400	1
CH5	0261	261	2200	170M3819	DIN1[1]	170M3069	1*TN/80	170M3219	1*TN/110	690	400	1
CH61	0300	300	4200	170M5813	DIN2	170M5063	2TN/80	170M5213	2TN/110	690	700	1
CH61	0385	385	4200	170M5813	DIN2	170M5063	2TN/80	170M5213	2TN/110	690	700	1
CH72	0460	460	6600	170M6814	DIN3	170M6064	3TN/80	170M6214	3TN/110	690	1000	1
CH72[2]	*0460*	*460*	*4200*	*170M6813*	*DIN2*	*170M5063*	*2TN/80*	*170M5213*	*2TN/110*	*690*	*700*	*1*
CH72	0520	520	6600	170M6814	DIN3	170M6064	3TN/80	170M6214	3TN/110	690	1000	1
CH72[2]	*0520*	*520*	*4200*	*170M6813*	*DIN2*	*170M5063*	*2TN/80*	*170M5213*	*2TN/110*	*690*	*700*	*1*
CH72	0590	590	6600	170M6814	DIN3	170M6064	3TN/80	170M6214	3TN/110	690	1000	1
CH72[2]	*0590*	*590*	*4200*	*170M6813*	*DIN2*	*170M5063*	*2TN/80*	*170M5213*	*32N/110*	*690*	*700*	*1*
CH72	0650	650	9000	170M8547	3SHT[3]	170M6066	3TN/80	170M6216	3TN/110	690	1250	1
CH72[2]	*0650*	*650*	*4200*	*170M5813*	*DIN2*	*170M5063*	*2TN/80*	*170M5213*	*2TN/110*	*690*	*700*	*1*
CH72	0730	730	9000	170M8547	3SHT[3]	170M6066	3TN/80	170M6216	3TN/110	690	1250	1
CH72[2]	*0730*	*730*	*4200*	*170M5813*	*DIN2*	*170M5063*	*2TN/80*	*170M5213*	*2TN/110*	*690*	*700*	*1*

Table 133. Fuse sizes (Bussman aR) for VACON® NX Liquid-cooled (500 V) AC drives

Chassis	Type	I_{th} [A]	Min. short circuit current $I_{cp,mr}$ [A]	DIN43620		DIN43653 (80 mm)		DIN43653 (110 mm)		Fuse U_n [V]	Fuse I_n [A]	Qty. of fuses per phase 3~/6~
				aR fuse part nr.	Fuse size	aR fuse part nr.	Fuse size	aR fuse part nr.	Fuse size			
CH63	0820	820	9600	170M6812	DIN3	170M6062	3TN/80	170M6212	3TN/110	690	800	2
CH63	0920	920	9600	170M6812	DIN3	170M6062	3TN/80	170M6212	3TN/110	690	800	2
CH63	1030	1030	13200	170M6814	DIN3	170M6064	3TN/80	170M6214	3TN/110	690	1000	2
CH63	1150	1150	13200	170M6814	DIN3	170M6064	3TN/80	170M6214	3TN/110	690	1000	2
CH74	1370	1370	6600	170M6814	DIN3	170M6064	3TN/80	170M6214	3TN/110	690	1000	3
CH74[2]	*1370*	*1370*	*9600*	*170M6812*	*DIN3*	*170M6062*	*3TN/80*	*170M6212*	*3TN/110*	*690*	*800*	*2*
CH74	1640	1640	6600	170M6814	DIN3	170M6064	3TN/80	170M6214	3TN/110	690	1000	3
CH74[2]	*1640*	*1640*	*9600*	*170M6812*	*DIN3*	*170M6062*	*3TN/80*	*170M6212*	*3TN/110*	*690*	*800*	*2*
CH74	2060	2060	9000	170M8547	3SHT[3]	170M6066	3TN/80	170M6216	3TN/110	690	1250	3
CH74[2]	*2060*	*2060*	*13200*	*170M6814*	*DIN3*	*170M6064*	*3TN/80*	*170M6214*	*3TN/110*	*690*	*1000*	*2*
CH74	2300	2300	9000	170M8547	3SHT[3]	170M6066	3TN/80	170M6216	3TN/110	690	1250	3
CH74[2]	*2300*	*2300*	*6600*	*170M6814*	*DIN3*	*170M6064*	*3TN/80*	*170M6214*	*3TN/110*	*690*	*1000*	*2*

[1] Tj = 25 °C

[2] Data in Italic refer to drives with 12-pulse supply

[3] SHT fuses can be assembled into DIN fuse base of the corresponding size

Table 134. Fuse sizes (Bussman aR) for VACON® NX Liquid-cooled (690 V) AC drives

Chassis	Type	I_{th} [A]	Min. short circuit current $I_{cp,mr}$ [A]	DIN43620		DIN43653 (80 mm)		DIN43653 (110 mm)		Fuse U_n [V]	Fuse I_n [A]	Qty. of fuses per phase 3~/6~
				aR fuse part nr.	Fuse size	aR fuse part nr.	Fuse size	aR fuse part nr.	Fuse size			
CH61	0170	170	2200	170M3819	DIN1[1]	170M3069	1*TN/80	170M3219	1*TN/110	690	400	1
CH61	0208	208	2200	170M3819	DIN1[1]	170M3069	1*TN/80	170M3219	1*TN/110	690	400	1
CH61	0261	261	2200	170M3819	DIN1[1]	170M3069	1*TN/80	170M3219	1*TN/110	690	400	1
CH72	0325	325	4200	170M5813	DIN2	170M5063	2TN/80	170M5213	2TN/110	690	700	1
CH72[2]	*0325*	*325*	*2200*	*170M3819*	*DIN1[1]*	*170M3069*	*1*TN/80*	*170M3219*	*1*TN/110*	*690*	*400*	*1*
CH72	0385	385	4200	170M5813	DIN2	170M5063	2TN/80	170M5213	2TN/110	690	700	1
CH72[2]	*0385*	*385*	*2200*	*170M3819*	*DIN1[1]*	*170M3069*	*1*TN/80*	*170M3219*	*1*TN/110*	*690*	*400*	*1*
CH72	0416	416	4800	170M6812	DIN3	170M6062	3TN/80	170M6212	3TN/110	690	800	1
CH72[2]	*0416*	*416*	*2200*	*170M3819*	*DIN1[1]*	*170M3069*	*1*TN/80*	*170M3219*	*1*TN/110*	*690*	*400*	*1*
CH72	0460	460	4800	170M6812	DIN3	170M6062	3TN/80	170M6212	3TN/110	690	800	1
CH72[2]	*0460*	*460*	*2200*	*170M3819*	*DIN1[1]*	*170M3069*	*1*TN/80*	*170M3219*	*1*TN/110*	*690*	*400*	*1*
CH72	0502	502	4800	170M6812	DIN3	170M6062	3TN/80	170M6212	3TN/110	690	800	1
CH72[2]	*0502*	*502*	*2200*	*170M3819*	*DIN1[1]*	*170M3069*	*1*TN/80*	*170M3219*	*1*TN/110*	*690*	*400*	*1*
CH63	0590	590	4800	170M6814	DIN3	170M6064	3TN/80	170M6214	3TN/110	690	1100	1
CH63	0650	650	9000	170M8547	3SHT[3]	170M6066	3TN/80	170M6216	3TN/110	690	1250	1

Table 134. Fuse sizes (Bussman aR) for VACON® NX Liquid-cooled (690 V) AC drives

Chassis	Type	I_{th} [A]	Min. short circuit current $I_{cp,mr}$ [A]	DIN43620		DIN43653 (80 mm)		DIN43653 (110 mm)		Fuse U_n [V]	Fuse I_n [A]	Qty. of fuses per phase 3~/6~
				aR fuse part nr.	Fuse size	aR fuse part nr.	Fuse size	aR fuse part nr.	Fuse size			
CH63	0750	750	9000	170M8547	3SHT[3]	170M6066	3TN/80	170M6216	3TN/110	690	1250	1
CH74	0820	820	2200	170M5813	DIN2	170M5063	2TN/80	170M5213	2TN/110	690	700	3
CH74[2]	*0820*	*820*	*4800*	*170M6812*	*DIN3*	*170M6062*	*3TN/80*	*170M6212*	*3TN/110*	*690*	*800*	*1*
CH74	0920	920	2200	170M5813	DIN2	170M5063	2TN/80	170M5213	2TN/110	690	700	3
CH74[2]	*0920*	*920*	*4800*	*170M6812*	*DIN3*	*170M6062*	*3TN/80*	*170M6212*	*3TN/110*	*690*	*800*	*1*
CH74	1030	1030	2200	170M5813	DIN2	170M5063	2TN/80	170M5213	2TN/110	690	700	3
CH74[2]	*1030*	*1030*	*6600*	*170M6814*	*DIN3*	*170M6064*	*3TN/80*	*170M6214*	*3TN/110*	*690*	*1000*	*1*
CH74	1180	1180	2200	170M5813	DIN2	170M5063	2TN/80	170M5213	2TN/110	690	700	3
CH74[2]	*1180*	*1180*	*6600*	*170M6814*	*DIN3*	*170M6064*	*3TN/80*	*170M6214*	*3TN/110*	*690*	*1000*	*1*
CH74	1300	1300	6600	170M6814	DIN3	170M6064	3TN/80	170M6214	3TN/110	690	1000	3
CH74[2]	*1300*	*1300*	*9000*	*170M8547*	*3SHT[3]*	*170M6066*	*3TN/80*	*170M6216*	*3TN/110*	*690*	*1250*	*1*
CH74	1500	1500	6600	170M6814	DIN3	170M6064	3TN/80	170M6214	3TN/110	690	1000	3
CH74[2]	*1500*	*1500*	*9000*	*170M8547*	*3SHT[3]*	*170M6066*	*3TN/80*	*170M6216*	*3TN/110*	*690*	*1250*	*1*
CH74	1700	1700	6600	170M6814	DIN3	170M6064	3TN/80	170M6214	3TN/110	690	1000	3
CH74[2]	*1700*	*1700*	*9600*	*170M6812*	*DIN3*	*170M6064*	*3TN/80*	*170M6212*	*3TN/110*	*690*	*800*	*1*

[1] Tj = 25 °C

[2] Data in Italic refer to drives with 12-pulse supply

[3] SHT fuses can be assembled into DIN fuse base of the corresponding size

Table 135. Fuse sizes (Bussman aR) for VACON® NX Liquid-cooled (450—800 V) inverters

Chassis	Type	I_{th} [A]	DIN43620		DIN43653 (80 mm)		DIN43653 (110 mm)		Fuse U_n [V]	Fuse I_n [A]	Qty. of fuses/ pole
			aR fuse part nr.	Fuse size	aR fuse part nr	Fuse size	aR fuse part nr.	Fuse size			
CH3	0016	16	170M3810	DIN1[1]	170M3060	1*TN/80	170M3210	1*TN/110	690	63	1
CH3	0022	22	170M3810	DIN1[1]	170M3060	1*TN/80	170M3210	1*TN/110	690	63	1
CH3	0031	31	170M3810	DIN1[1]	170M3060	1*TN/80	170M3210	1*TN/110	690	63	1
CH3	0038	38	170M3813	DIN1[1]	170M3063	1*TN/80	170M3213	1*TN/110	690	125	1
CH3	0045	45	170M3813	DIN1[1]	170M3063	1*TN/80	170M3213	1*TN/110	690	125	1
CH3	0061	61	170M3813	DIN1[1]	170M3063	1*TN/80	170M3213	1*TN/110	690	125	1
CH4	0072	72	170M3815	DIN1[1]	170M3063	1*TN/80	170M3213	1*TN/110	690	200	1
CH4	0087	87	170M3815	DIN1[1]	170M3065	1*TN/80	170M3215	1*TN/110	690	200	1
CH4	0105	105	170M3815	DIN1[1]	170M3065	1*TN/80	170M3215	1*TN/110	690	200	1
CH4	0140	140	170M3819	DIN1[1]	170M3069	1*TN/80	170M3219	1*TN/110	690	400	1
CH5	0168	168	170M3819	DIN1[1]	170M3069	1*TN/80	170M3219	1*TN/110	690	400	1
CH5	0205	205	170M3819	DIN1[1]	170M3069	1*TN/80	170M3219	1*TN/110	690	400	1
CH5	0261	261	170M6808	DIN3	170M6058	3TN/80	170M6208	3TN/110	690	500	1
CH61	0300	300	170M6812	DIN3	170M6062	3TN/80	170M6212	3TN/110	690	800	1
CH61	0385	385	170M6812	DIN3	170M6062	3TN/80	170M6212	3TN/110	690	800	1
CH62	0460	460	170M6814	DIN3	170M6064	3TN/80	170M6214	3TN/110	690	1000	1
CH62	0520	520	170M6814	DIN3	170M6064	3TN/80	170M6214	3TN/110	690	1000	1
CH62	0590	590	170M6812	DIN3	170M6062	3TN/80	170M6212	3TN/110	690	800	2
CH62	0650	650	170M6812	DIN3	170M6062	3TN/80	170M6212	3TN/110	690	800	2
CH62	0730	730	170M6812	DIN3	170M6062	3TN/80	170M6212	3TN/110	690	800	2
CH63	0820	820	170M6814	DIN3	170M6064	3TN/80	170M6214	3TN/110	690	1000	2
CH63	0920	920	170M6814	DIN3	170M6064	3TN/80	170M6214	3TN/110	690	1000	2
CH63	1030	1030	170M6812	DIN3	170M6062	3TN/80	170M6212	3TN/110	690	800	3
CH63	1150	1150	170M6812	DIN3	170M6062	3TN/80	170M6212	3TN/110	690	800	3
CH64	1370	1370	170M8547	3SHT[2]	170M6066	3TN/80	170M6216	3TN/110	690	1250	3
CH64	1640	1640	170M8547	3SHT[2]	170M6066	3TN/80	170M6216	3TN/110	690	1250	3
CH64	2060	2060	170M8550	3SHT[2]	170M6069	3TN/80	170M6219	3TN/110	690	1600	3
CH64	2300	2300	170M8550	3SHT[2]	170M6069	3TN/80	170M6219	3TN/110	690	1600	3

[1] Tj = 25 °C

[2] SHT fuses can be assembled into DIN fuse base of the corresponding size

Table 136. Fuse sizes (Bussman aR) for VACON® NX Liquid-cooled (640—1100 V) inverters

Chassis	Type	I_{th} [A]	DIN43620		DIN43653 (110 mm)		Fuse U_n [V]	Fuse I_n [A]	Qty. of fuses/ pole
			aR fuse part nr.	Fuse size[1]	aR fuse part nr.	Fuse size			
CH61	0170	170	170M4199	1SHT	170M4985	1TN/110	1250	400	1
CH61	0208	208	170M4199	1SHT	170M4985	1TN/110	1250	400	1
CH61	0261	261	170M6202	3SHT	170M8633	3TN/110	1250	500	1
CH62	0325	325	170M6305	3SHT	170M8636	3TN/110	1250	700	1
CH62	0385	385	170M6305	3SHT	170M8636	3TN/110	1250	700	1
CH62	0416	416	170M6277	3SHT	170M8639	3TN/110	1100	1000	1
CH62	0460	460	170M6277	3SHT	170M8639	3TN/110	1100	1000	1
CH62	0502	502	170M6277	3SHT	170M8639	3TN/110	1100	1000	1
CH63	0590	590	170M6305	3SHT	170M8636	3TN/110	1250	700	2
CH63	0650	650	170M6305	3SHT	170M8636	3TN/110	1250	700	2
CH63	0750	750	170M6305	3SHT	170M8636	3TN/110	1250	700	2
CH64	0820	820	170M6277	3SHT	170M8639	3TN/110	1100	1000	2
CH64	0920	920	170M6277	3SHT	170M8639	3TN/110	1100	1000	2
CH64	1030	1030	170M6277	3SHT	170M8639	3TN/110	1100	1000	3
CH64	1180	1180	170M6277	3SHT	170M8639	3TN/110	1100	1000	3
CH64	1300	1300	170M6277	3SHT	170M8639	3TN/110	1100	1000	3
CH64	1500	1500	170M6277	3SHT	170M8639	3TN/110	1100	1000	3
CH64	1700	1700	170M6277	3SHT	170M8639	3TN/110	1100	1000	3

[1] SHT fuses can be assembled into DIN fuse base of the corresponding size

Table 137. Fuse sizes (Bussman aR) for VACON® NX AFE units (380—500 V)

Chassis	Type	I_{th} [A]	Min. short circuit current $I_{cp,mr}$ [A]	DIN43620		DIN43653 (80 mm)		DIN43653 (110 mm)		Fuse U_n [V]	Fuse I_n [A]	Qty. of fuses / phase 3~
				aR fuse part nr.	Fuse size[1]	aR fuse part nr.	Fuse size[1]	aR fuse part nr.	Fuse size[1]			
CH3	0016	16	290	170M2679	DIN00	170M4828	00TN/80			1000	63	1
CH3	0022	22	290	170M2679	DIN00	170M4828	00TN/80			1000	63	1
CH3	0031	31	290	170M2679	DIN00	170M4828	00TN/80			1000	63	1
CH3	0038	38	290	170M2679	DIN00	170M4828	00TN/80			1000	63	1
CH3	0045	45	920	170M2683	DIN00	170M4832	00TN/80			1000	160	1
CH3	0061	61	920	170M2683	DIN00	170M4832	00TN/80			1000	160	1
CH4	0072	72	920	170M2683	DIN00	170M4832	00TN/80			1000	160	1
CH4	0087	87	920	170M2683	DIN00	170M4832	00TN/80			1000	16	1
CH4	0105	105	920	170M2683	DIN00	170M4832	00TN/80			1000	160	1
CH4	0140	140	4200	170M4199	1SHT			170M4985	1TN/110	1250	400	1
CH5	0168	168	4200	170M4199	1SHT			170M4985	1TN/110	1250	400	1
CH5	0205	205	4200	170M4199	1SHT			170M4985	1TN/110	1250	400	1
CH5	0261	261	4200	170M4199	1SHT			170M4985	1TN/110	1250	400	1
CH61	0300	300	4400	170M6202	3SHT			170M8633	3TN/110	1250	500	1
CH61	0385	385	6000	170M6305	3SHT			170M8636	3TN/110	1250	700	1
CH62	0460	460	10000	170M6277	3SHT			170M8639	3TN/110	1100	1000	1
CH62	0520	520	10000	170M6277	3SHT			170M8639	3TN/110	1100	1000	1
CH62	0590	590	10000	170M6277	3SHT			170M8639	3TN/110	1100	1000	1
CH62	0650	650	12000	170M6305	3SHT			170M8636	3TN/110	1250	700	2
CH62	0730	730	12000	170M6305	3SHT			170M8636	3TN/110	1250	700	2
CH63	0820	820	12000	170M6305	3SHT			170M8636	3TN/110	1250	700	2
CH63	0920	920	20000	170M6277	3SHT			170M8639	3TN/110	1100	1000	2
CH63	1030	1030	20000	170M6277	3SHT			170M8639	3TN/110	1100	1000	2
CH63	1150	1150	20000	170M6277	3SHT			170M8639	3TN/110	1100	1000	2
CH64	1370	1370	30000	170M6277	3SHT			170M8639	3TN/110	1100	1000	3
CH64	1640	1640	30000	170M6277	3SHT			170M8639	3TN/110	1100	1000	3
CH64	2060	2060	40000	170M6277	3SHT			170M8639	3TN/110	1100	1000	4
CH64	2300	2300	40000	170M6277	3SHT			170M8639	3TN/110	1100	1000	4

[1] SHT fuses can be assembled into DIN fuse base of the corresponding size

Table 138. Fuse sizes (Bussman aR) for VACON® NX AFE units (525—690 V)

Chassis	Type	I_{th} [A]	Min. short circuit current $I_{cp,mr}$ [A]	DIN43620		DIN43653 (110 mm)		Fuse U_n [V]	Fuse I_n [A]	Qty. of fuses / phase 3~
				aR fuse part nr.	Fuse size[1]	aR fuse part nr.	Fuse size[1]			
CH61	0170	170	4200	170M4199	1SHT	170M4985	1TN/110	1250	400	1
CH61	0208	208	4200	170M4199	1SHT	170M4985	1TN/110	1250	400	1
CH61	0261	261	4200	170M4199	1SHT	170M4985	1TN/110	1250	400	1
CH62	0325	325	6000	170M6305	3SHT	170M8636	3TN/110	1250	700	1
CH62	0385	385	6000	170M6305	3SHT	170M8636	3TN/110	1250	700	1
CH62	0416	416	6000	170M6305	3SHT	170M8636	3TN/110	1250	700	1
CH62	0460	460	10000	170M6277	3SHT	170M8639	3TN/110	1100	1000	1
CH62	0502	502	10000	170M6277	3SHT	170M8639	3TN/110	1100	1000	1
CH63	0590	590	10000	170M6277	3SHT	170M8639	3TN/110	1100	1000	1
CH63	0650	650	12000	170M6305	3SHT	170M8636	3TN/110	1250	700	2
CH63	0750	750	12000	170M6305	3SHT	170M8636	3TN/110	1250	700	2
CH64	0820	820	12000	170M6305	3SHT	170M8636	3TN/110	1250	700	2
CH64	0920	920	20000	170M6277	3SHT	170M8639	3TN/110	1100	1000	2
CH64	1030	1030	20000	170M6277	3SHT	170M8639	3TN/110	1100	1000	2
CH64	1180	1180	20000	170M6277	3SHT	170M8639	3TN/110	1100	1000	2
CH64	1300	1300	18000	170M6305	3SHT	170M8636	3TN/110	1250	700	3
CH64	1500	1500	30000	170M6277	3SHT	170M8639	3TN/110	1100	1000	3

[1] SHT fuses can be assembled into DIN fuse base of the corresponding size

Table 139. Brake chopper unit fuse selection (Bussman aR), mains voltage 465–800 V DC

Chassis	Type	Min resistor value, 2* [ohm]	Braking current	DIN43620		Fuse U_n [V]	Fuse I_n [A]	Qty. of fuses per pole
				aR fuse part nr.	Fuse size[1]			
CH3	0016	52.55	32	170M2679	DIN00	690	63	1
CH3	0022	38.22	44	170M2679	DIN00	690	63	1
CH3	0031	27.12	62	170M2679	DIN00	690	63	1
CH3	0038	22.13	76	170M2679	DIN00	690	63	1
CH3	0045	18.68	90	170M2683	DIN00	690	160	1
CH3	0061	13.78	122	170M2683	DIN00	690	160	1
CH4	0072	11.68	144	170M2683	DIN00	690	160	1
CH4	0087	9.66	174	170M2683	DIN00	690	160	1
CH4	0105	8.01	210	170M2683	DIN00	690	160	1
CH4	0140	6.01	280	170M4199	1SHT	690	400	1
CH5	0168	5.00	336	170M4199	1SHT	690	400	1
CH5	0205	4.10	410	170M4199	1SHT	690	400	1
CH5	0261	3.22	522	170M4199	1SHT	690	400	1
CH61	0300	2.80	600	170M6202	3SHT	690	500	1
CH61	0385	2.18	770	170M6305	3SHT	690	700	2
CH62	0460	1.83	920	170M6277	3SHT	690	1000	2
CH62	0520	1.62	1040	170M6277	3SHT	690	1000	2
CH62	0590	1.43	1180	170M6277	3SHT	690	1000	2
CH62	0650	1.29	1300	170M6305	3SHT	690	700	3
CH62	0730	1.15	1460	170M6305	3SHT	690	700	3

Table 140. Brake chopper unit fuse selection (Bussman aR), mains voltage 640–1100 V DC

Chassis	Type	Min resistor value, 2* [ohm]	Braking current	DIN43620		Fuse U_n [V]	Fuse I_n [A]	Qty. of fuses per pole
				aR fuse part nr.	Fuse size[1]			
CH61	0170	6.51	340	170M6305	3SHT	1250	700	1
CH61	0170*	80	27	170M2679	DIN00	1000	63	1
CH61	0208	5.32	416	170M6277	3SHT	1250	1000	1
CH61	0208*	30	73	170M2683	DIN00	1000	160	1
CH61	0261	4.24	522	170M6277	3SHT	1250	1000	1
CH61	0261*	12	183	170M4199	1SHT	1250	400	1
CH62	0310	3.41	650	170M6305	3SHT	1250	700	2
CH62	0385	2.88	770	170M6277	3SHT	1250	1000	2
CH62	0416	2.66	832	170M6277	3SHT	1250	1000	2
CH62	0460	2.41	920	170M6277	3SHT	1250	1000	2
CH62	0502	2.21	1004	170M6277	3SHT	1250	1000	2

[1] SHT fuses can be assembled into DIN fuse base of the corresponding size

14.4 POWER CONVERSION EQUIPMENT

14.4.1 TECHNICAL DATA

Table 141. Additional technical specifications for VACON® Active Front End units used in grid converter applications

DC connection	Operating voltage	NXA_xxxx5: 465-800 V DC NXA_xxxx6: 640-1100 V DC
	Maximum operating DC current	See Chapter 14.4.2.
	I_{SC}	85 kA when fuses are used as per the fuse tables for grid converters with circuit breaker, busbar, busbar supports, enclosures, etc., which are sized for 85 kA based on relevant installation standards.
	Maximum inverter backfeed current to the DC load	Depends on the DC fuse rating. See Chapter 14.3.
	Minimum DC voltage for inverter to begin operation	The DC link must be charged up to 85% of nominal DC voltage (1.35 × grid nominal V AC)
AC connection	Nominal voltage	See Chapter 14.4.2.
	Current (maximum continuous)	See Chapter 14.4.2.
	Inrush current	Duration: < 10 ms Peak value: Depends on the short circuit capacity of the grid (grid impedance), grid voltage, RLC filter/LC filter, etc.
	Frequency	See Chapter 14.4.2.
	Power (maximum continuous)	See Chapter 14.4.2.
	Power factor range	-0.95...+0.95 with 100% active power. Other power factor values depend on the selected control mode. See the application manual for details.
	Maximum output fault current	The value depends on grid impedance and the fuse I^2t value. The maximum output current (from the inverter to the grid) is limited by the fast overcurrent protection, the software overcurrent protection, or the output current limit of the inverter. If the fault occurs upstream of the AC fuses, one of these limits the current from the inverter to the fault.
	Maximum output overcurrent protection	Depends on the AC fuse rating. See Chapter 14.3.

Table 141. Additional technical specifications for VACON® Active Front End units used in grid converter applications

External isolation transformer (not in the scope of Danfoss supply)	Configuration type	Delta-connection on the converter side is recommended. For other configurations, please contact local Danfoss representatives for further assistance.
	Electrical ratings *	• The transformer's secondary nominal voltage must be selected according to load DC voltage variation and/or grid code requirements. Refer to the design guide (DPD02146) or a local Danfoss representative for further assistance. • Rated Power of the transformer must be similar or higher than the maximum power of the inverter or group of inverters. • Frequency: 50/60 Hz • Transformer must indicate losses and SC current. • Transformer secondary winding impedance must be ≥ 4%, if LC filter is used
	Environmental ratings	Must be based on the installation location, end user requirements, compliance with applicable safety standards and directives, etc.
Ambient conditions	Enclosure class	IP00
	Pollution degree	2
Protection	Over voltage category	OVC III
	Protection class (IEC 61140)	Class I

* See the Grid converter application manuals (DPD01599 and DPD01978) and the reference design for more specific information.

14.4.2 POWER RATINGS

Table 142. AC output/AC input ratings for VACON® Active Front End units used in grid converter applications

Code	Enclosure size	Voltage nominal* [V AC]	Current [A AC]	Frequency nominal [Hz]	Frequency range [Hz]	Power at pf 1.0 [kW]
NXA_0168 5	CH5	400	140	50	50/60	97
NXA_0205 5	CH5	400	170	50	50/60	118
NXA_0261 5	CH5	400	205	50	50/60	142
NXA_0300 5	CH61	400	261	50	50/60	181
NXA_0385 5	CH61	400	300	50	50/60	208
NXA_0460 5	CH62	400	385	50	50/60	267
NXA_0520 5	CH62	400	460	50	50/60	319
NXA_0590 5	CH62	400	520	50	50/60	360

Table 142. AC output/AC input ratings for VACON® Active Front End units used in grid converter applications

Code	Enclosure size	Voltage nominal* [V AC]	Current [A AC]	Frequency nominal [Hz]	Frequency range [Hz]	Power at pf 1.0 [kW]
NXA_0650 5	CH62	400	590	50	50/60	409
NXA_0730 5	CH62	400	650	50	50/60	450
NXA_0820 5	CH63	400	730	50	50/60	506
NXA_0920 5	CH63	400	820	50	50/60	568
NXA_1030 5	CH63	400	920	50	50/60	637
NXA_1150 5	CH63	400	1030	50	50/60	714
NXA_1370 5	CH64	400	1150	50	50/60	797
NXA_1640 5	CH64	400	1370	50	50/60	949
NXA_2060 5	CH64	400	1640	50	50/60	1136
NXA_2300 5	CH64	400	2060	50	50/60	1427
NXA_0170 6	CH61	600	144	50	50/60	150
NXA_0208 6	CH61	600	170	50	50/60	177
NXA_0261 6	CH61	600	208	50	50/60	216
NXA_0325 6	CH62	600	261	50	50/60	271
NXA_0385 6	CH62	600	325	50	50/60	338
NXA_0416 6	CH62	600	385	50	50/60	338
NXA_0460 6	CH62	600	416	50	50/60	400
NXA_0502 6	CH62	600	460	50	50/60	478
NXA_0590 6	CH63	600	502	50	50/60	522
NXA_0650 6	CH63	600	590	50	50/60	613
NXA_0750 6	CH63	600	650	50	50/60	675
NXA_0820 6	CH64	600	750	50	50/60	779
NXA_0920 6	CH64	600	820	50	50/60	852
NXA_1030 6	CH64	600	920	50	50/60	956
NXA_1180 6	CH64	600	1030	50	50/60	1070
NXA_1300 6	CH64	600	1180	50	50/60	1226
NXA_1500 6	CH64	600	1300	50	50/60	1351
NXA_1700 6	CH64	600	1500	50	50/60	1559

* Voltage range: see the Design guide (DPD02146) and the MyDrive® Select web tool.

Table 143. DC input/DC output ratings for VACON® Active Front End units used in grid converter applications

Code	Enclosure size	Voltage nominal at nominal AC [V DC] *	Voltage range [V DC]	Current maximum continuous [A DC]
NXA_0168 5	CH5	630	465-800	154
NXA_0205 5	CH5	630	465-800	187
NXA_0261 5	CH5	630	465-800	225

Table 143. DC input/DC output ratings for VACON® Active Front End units used in grid converter applications

Code	Enclosure size	Voltage nominal at nominal AC [V DC] *	Voltage range [V DC]	Current maximum continuous [A DC]
NXA_0300 5	CH61	630	465-800	287
NXA_0385 5	CH61	630	465-800	330
NXA_0460 5	CH62	630	465-800	423
NXA_0520 5	CH62	630	465-800	506
NXA_0590 5	CH62	630	465-800	572
NXA_0650 5	CH62	630	465-800	649
NXA_0730 5	CH62	630	465-800	715
NXA_0820 5	CH63	630	465-800	803
NXA_0920 5	CH63	630	465-800	902
NXA_1030 5	CH63	630	465-800	1012
NXA_1150 5	CH63	630	465-800	1133
NXA_1370 5	CH64	630	465-800	1265
NXA_1640 5	CH64	630	465-800	1507
NXA_2060 5	CH64	630	465-800	1804
NXA_2300 5	CH64	630	465-800	2265
NXA_0170 6	CH61	945	640-1100	158
NXA_0208 6	CH61	945	640-1100	187
NXA_0261 6	CH61	945	640-1100	229
NXA_0325 6	CH62	945	640-1100	287
NXA_0385 6	CH62	945	640-1100	357
NXA_0416 6	CH62	945	640-1100	357
NXA_0460 6	CH62	945	640-1100	423
NXA_0502 6	CH62	945	640-1100	506
NXA_0590 6	CH63	945	640-1100	552
NXA_0650 6	CH63	945	640-1100	649
NXA_0750 6	CH63	945	640-1100	715
NXA_0820 6	CH64	945	640-1100	825
NXA_0920 6	CH64	945	640-1100	902
NXA_1030 6	CH64	945	640-1100	1012
NXA_1180 6	CH64	945	640-1100	1133
NXA_1300 6	CH64	945	640-1100	1298
NXA_1500 6	CH64	945	640-1100	1430
NXA_1700 6	CH64	945	640-1100	1650

* 1.575 x nominal AC voltage. The value 1.575 comes from the ratio 1.5 (√2 + control margin) between the DC link and INU side, plus 5% filter losses.

VACON®

www.danfoss.com

Document ID:
DPD00887K
Rev. K

Sales code: DOC-INSNXPLC-10+DLUK

Danfoss Drives Oy
Runsorintie 7
65380 Vaasa
Finland