Operating Guide

iC7-Hybrid Modbus

Modbus TCP OS7MT



Explore our solutions
drives.danfoss.com

Contents

1 Introduction and Safety

1.1 Purpose of the Operating Guide 5
1.2 Additional Resources 5
1.3 Safety Symbols 5
1.4 Qualified Personnel 6
1.5 Safety Precautions 6
1.6 Abbreviations 7
1.7 Trademarks 8
1.8 Version History 8

2 Product Overview

2.1 Modbus Features and Technical Data 9
2.3 iC Hybrid 10
2.4 iC Generic 12
2.5 iC Speed 15
2.6 PROFIdrive Application Class 1 17
2.7 Network Topologies 21

3 Modbus Data Mapping

3.1 Mapping Modbus Coils 24
3.2 Mapping Modbus Holding Registers 24
3.3 Mapping Modbus Input Registers 27
3.4 Setting Permissions 27
3.5 Saving Modbus Configuration to a Device 27

4 Fieldbus Cable Connections

4.1 Prerequisites for Installation 29
4.2 Installation in Frequency Converters 29
4.3 Installation in System Modules 30
4.4 EMC-compliant Installation 31

5 Configuration

5.1 Selecting the Fieldbus Profile 33

5.2 Configuring Fieldbus Protection Settings for the DC/DC Converter Application 33
5.3 Configuring Fieldbus Protection Settings for the Grid Converter Application 34
5.4 Configuring Fieldbus Protection Settings for the Generator Application 35
5.5 Configuring the Ethernet Interface 37
5.6 Configuring Modbus Unit Identifier 38
5.7 Configuring Modbus Data Settings 38

6 Troubleshooting

6.1 Configuring Port Mirroring Settings 39
6.2 Identifying a Unit 39
6.3 Fieldbus Indicator LEDs 40

7 Modbus Features

7.1 Data Objects 42
7.2 Function Codes 42
7.3 Data Field 43
7.4 Read Device Identity 43

Danfoss Drives Oy © 2025.12

1 Introduction and Safety

1.1 Purpose of the Operating Guide

This operating guide provides information about configuring the system, controlling the drive or power converter, accessing parameters, programming, troubleshooting, and some typical application examples.

The operating guide is intended for use by qualified personnel, who are familiar with the iC7 drives and power converters, Modbus technology, and the PC or PLC that is used as a master in the system.

Read the instructions before configuring Modbus, and follow the procedures in this guide.

1.2 Additional Resources

Additional resources are available to help understand the features, and safely install and operate the iC7 series products:

- Safety guides, which provide important safety information related to installing iC7 series drives and power converters.
- Installation guides, which cover the mechanical and electrical installation of drives, power converters, or functional extension options.
- Design guides, which provide technical information to understand the capabilities of the iC7 series drives or power converters for integration into motor control and monitoring systems.
- Operating guides, which include instructions for control options, and other components for the drive.
- Application guides, which provide instructions on setting up the drive or power converter for a specific end use. Application guides for application software packages also provide an overview of the parameters and value ranges for operating the drives or power converters, configuration examples with recommended parameter settings, and troubleshooting steps.
- *Facts Worth Knowing about AC Drives*, available for download on www.danfoss.com.
- Other supplemental publications, drawings, and guides are available at www.danfoss.com.

Latest versions of Danfoss product guides are available for download at https://www.danfoss.com/en/service-and-support/documentation/.

1.3 Safety Symbols

The following symbols are used in Danfoss documentation and products.

⚠ DANGER

Indicates a hazardous situation which, if not avoided, will result in death or serious injury.

⚠ WARNING

Indicates a hazardous situation which, if not avoided, could result in death or serious injury.

⚠ CAUTION

Indicates a hazardous situation which, if not avoided, could result in minor or moderate injury.

NOTICE

Indicates information considered important, but not hazard-related (for example, messages relating to property damage).

	ISO warning symbol for general warnings
	ISO warning symbol for hot surfaces and burn hazard
	ISO warning symbol for high voltage and electric shock
	Symbol for indicating the required discharge time of the capacitors in the product.
	ISO action symbol for referring to the instructions

1.4 Qualified Personnel

Correct and reliable transport, storage, installation, operation, and maintenance are required for the trouble-free and safe operation of the product. Only qualified personnel are allowed to install and operate this equipment.

Qualified personnel are defined as trained staff, who are authorized to install, commission, and maintain equipment, systems, and circuits in accordance with pertinent laws and regulations. Also, the qualified personnel must be familiar with the instructions and safety measures described in this guide.

1.5 Safety Precautions

⚠ WARNING



HIGH VOLTAGE

Drives and power converters contain high voltage when connected to AC mains input, DC supply, or load sharing. Failure to perform installation, startup, and maintenance by qualified personnel can result in death or serious injury.

- Only qualified personnel are allowed to perform installation, startup, and maintenance.

⚠ WARNING

UNINTENDED START

When the drive or power converter is connected to the AC mains or connected on the DC terminals, the motor may start at any time, causing risk of death, serious injury, and equipment or property damage.

- Stop the drive or power converter before configuring parameters.
- Make sure that the drive or power converter cannot be started by an external switch, a fieldbus command, an input reference signal from the control panel, or after a cleared fault condition.
- Disconnect the drive or power converter from the mains whenever safety considerations make it necessary to avoid an unintended motor start.
- Check that the drive or power converter and any driven equipment are in operational readiness.

Danfoss Drives Oy © 2025.12

⚠ WARNING



DISCHARGE TIME

The drive or power converter contains DC-link capacitors, which can remain charged even when the drive or power converter is not powered. High voltage can be present even when the warning indicator lights are off. Failure to wait the specified time after power has been removed before performing service or repair work can result in death or serious injury.

- Stop the motor.
- Disconnect all power sources, including permanent magnet type motors.
- Wait for capacitors to discharge fully. The discharge time is specified on the drive or power converter product label.
- Measure the voltage level to verify full discharge.

⚠ WARNING

LEAKAGE CURRENT HAZARD

Leakage currents exceed 3.5 mA. Failure to ground the drive or power converter properly can result in death or serious injury.

- Ensure that the minimum size of the ground conductor complies with the local safety regulations for high touch current equipment.

⚠ WARNING

EQUIPMENT HAZARD

Contact with rotating shafts and electrical equipment can result in death or serious injury.

- Ensure that only trained and qualified personnel perform installation, start-up, and maintenance.
- Ensure that electrical work conforms to national and local electrical regulations.
- Follow the procedures in this guide.

⚠ CAUTION

INTERNAL FAILURE HAZARD

An internal failure in the drive or power converter can result in serious injury when the drive or power converter is not properly closed.

- Ensure that all safety covers are in place and securely fastened before applying power.

1.6 Abbreviations

Table 1: Abbreviations

Abbreviation	Definition
ACD	Address Conflict Detection
BOOL	Boolean
CTW	Control word
DCP	Discovery and configuration protocol
DHCP	Dynamic host configuration protocol
EMC	Electromagnetic compatibility

Table 1: Abbreviations - (continued)

Abbreviation	Definition
I/O	Input/Output
IP	Internet protocol
CP	Control panel
LED	Light-emitting diode
LLDP	Link layer discovery protocol
LSB	Least significant bit
MAV	Main actual value
MEI	Modbus encapsulated interface
MRV	Main reference value
MSB	Most significant bit
PC	Personal computer
PCD	Process channel data
PLC	Programmable logic controller
PNU	Parameter number
PPO	Process parameter object
REF	Reference
SNMP	Simple network management protocol
STW	Status word
VLAN	Virtual LAN

1.7 Trademarks

Ethernet® is a registered trademark of Xerox Corporation.

MODBUS® is a registered trademark of Schneider Electric USA, Inc.

1.8 Version History

This guide is regularly reviewed and updated. All suggestions for improvement are welcome.

The original language of this guide is English.

Table 2: Version History

Version	Remarks
AQ485333770758, version 0401	Updates in the configuration instructions.
AQ485333770758, version 0301	Added information about cyclic process data.
AQ485333770758, version 0201	Added instructions for configuring Modbus TCP with iC7 Series Generator application software.
AQ485333770758, version 0101	Initial version.

Danfoss Drives Oy © 2025.12

2 Product Overview

2.1 Modbus Features and Technical Data

Fieldbus options for iC7 are integrated in the control board. Fieldbuses are enabled on communication interfaces X1 and X2 only. Modbus TCP is offered as standard, and other protocols such as PROFINET RT can be selected in the configurator when ordering a drive or power converter, or alternatively, they can be activated later by a proof-of-purchase token.

Table 3: Modbus Model Codes

Model code	Description
+BAMT	Modbus TCP OS7MT

Modbus is a communication protocol developed by Modicon for sending information between electronic devices. In Modbus TCP, the device requesting the information is called the Modbus client, and the devices supplying information are called Modbus servers.

The client can also write information to the server. Modbus is typically used to transmit signals from instrumentation and control devices back to a main controller or data gathering system.

Modbus does not feature a dedicated data channel, and therefore Modbus requests are handled as acyclic.

Table 4: Modbus TCP Features

Feature	Technical data
Cyclic response	5 ms response time per variable (read/write non-persistent storage)
Supported Modbus objects	Coils (1 bit): Read-write
	Input register (16 bits): Read-only
	Holding register (16 bits): Read-write
Connection	LLDP/SNMP
	IPv4
	Addressing mode: DCP, STATIC, DHCP/BOOTP
Configuration	MyDrive® Insight

2.2 Communication Profiles and Objects

Each application in the iC7 series has a dedicated profile or profiles for fieldbus communication.

When using the Generator application software, a communication profile must be selected. Communication profiles are selected in parameter ***Fieldbus Profile (1301)***. The parameter is applied only when the active control place is set to fieldbus control, and when parameter ***Converter Mode (162)*** is set to ***Motor Control***. The supported profiles for motor control operation are iC Generic, iC Speed, and PROFIdrive Application Class 1.

For Modbus, the fieldbus profile can also be selected via Holding Register location 1.

If parameter ***Converter Mode (162)*** is set to ***Grid Control*** when using any of the iC7-Hybrid application software, only the iC Hybrid profile is available.

Table 5: Communication Profiles and Supported Applications

Profile	Grid Converter	DC/DC Converter	Generator
iC Hybrid	X	X	X
iC Generic	–	–	X
iC Speed	–	–	X
PROFIdrive	–	–	X

2.3 iC Hybrid

2.3.1 Overview

The iC Hybrid profile is used in the iC7 series with Grid Converter, Grid Converter with Grid Codes and DC/DC Converter applications, and with the Generator application in grid control mode.

2.3.2 Control Word

Table 6: Control Word Bits in iC Hybrid Profile

Bit	Name	Description
0	Switch On Enabled	0: Pre-charging(1), closing the main circuit breaker(1), and running are prevented or interrupted. If the main circuit breaker is closed, it opens(1). 1: Pre-charging(1), closing the main circuit breaker(1), and running are not prevented or interrupted.
1	MCB Close Enabled	0: Closing the main circuit breaker is prevented(1) or the main circuit breaker is opened(1), and running is prevented or interrupted. 1: Closing the main circuit breaker is not prevented(1).
2	Quick Stop	0: Activate Quick Stop. 1: Do not activate Quick Stop.
3	Start	0: Stop the unit if it is running, or stop the startup sequence if it is not completed. 1: Initiate the startup sequence (DC-link pre-charging(2), closing the main circuit breaker(2), and start running), or keep the unit running.
4	Pre-charge	0: Stop the DC-link pre-charging, if ongoing. 1: Start or continue the DC-link pre-charging.
5	–	Reserved
6	–	Reserved
7	Event Reset	0: No action. 1: Reset active warnings/faults.
8	–	Reserved
9	–	Reserved
10	Data Valid	0: Ignore the current incoming process data values, instead use the last processed value when the Data Valid bit was true. 1: Use the current incoming process data values. For most of the control word commands to be acknowledged by the drive or power converter, the active control place must be set to fieldbus control in parameter group ***Control Places*** in parameter group ***2 Parameters***.
11	Watchdog	Incoming watchdog bit. With continuous toggling between 0 and 1, this bit can be used as a sign-of-life between the drive or power converter and fieldbus controller. The value of this bit is passed through the fieldbus status word as is.

Danfoss Drives Oy © 2025.12

Table 6: Control Word Bits in iC Hybrid Profile - (continued)

Bit	Name	Description
12	Fieldbus Digital Input 1	0: Fieldbus Digital Input 1 inactive. 1: Fieldbus Digital Input 1 active. Select the value ***CTW B12*** for any input parameter to use this signal to activate a function.
13	Fieldbus Digital Input 2	0: Fieldbus Digital Input 2 inactive. 1: Fieldbus Digital Input 2 active. Select the value ***CTW B13*** for any input parameter to use this signal to activate a function.
14	Fieldbus Digital Input 3	0: Fieldbus Digital Input 3 inactive. 1: Fieldbus Digital Input 3 active. Select the value ***CTW B14*** for any input parameter to use this signal to activate a function.
15	Fieldbus Digital Input 4	0: Fieldbus Digital Input 4 inactive. 1: Fieldbus Digital Input 4 active. Select the value ***CTW B15*** for any input parameter to use this signal to activate a function.

1) If controlled by the grid converter unit.

2) If applicable.

2.3.3 Status Word

Table 7: Status Word Bits in iC Hybrid Profile

Bit	Name	Description
0	Ready to Switch On	0: Not ready to switch on. 1: Ready to switch on.
1	Ready to Run	0: The converter is not ready to start modulation. Check ***Grid Control Ready Status (5096)*** or ***DC/DC Control Ready Status (6520)*** and ***Application Ready Status Word (6525)***. 1: The converter is ready to start modulating.
2	Running	0: The converter is not modulating. 1: The converter is modulating.
3	Fault	0: No faults are active. 1: One or more faults are active.
4	–	Reserved
5	Quick Stop	0: Quick stop active. 1: Quick stop not active.
6	–	Reserved
7	Warning	0: No warnings active. 1: One or more warnings are active.
8	–	Reserved

Table 7: Status Word Bits in iC Hybrid Profile - (continued)

Bit	Name	Description
9	Control by PLC	0: The active control place is not fieldbus. 1: The active control place is fieldbus.
10	–	Reserved
11	Run Enabled	0: Run enable from the dedicated input signal is missing. 1: Run enable from the dedicated input signal is present.
12	–	Reserved
13	–	Reserved
14	–	Reserved
15	Watchdog Feedback	0: The watchdog signal is low. 1: The watchdog signal is high.

2.4 iC Generic

2.4.1 Overview

The iC Generic profile is used for motor control operation with the iC7 Series Generator application software.

2.4.2 Control Word

Table 8: iC Generic Profile Control Word Bits

Bit	Name	Description
0	Ramp Stop	0: The ramp stop request is inactive. The drive can be started. 1: The drive is ready to operate.
1	Coast Stop	0: A running drive coasts to a stop (modulation stops). 1: The coast request is inactive. The drive can be started.
2	Quick Stop	0: The drive stops with the Quick Stop function. 1: The Quick Stop request is inactive. The drive can be started.
3	Start	0: The drive stops operating with the method determined by the parameter ***Missing Start Response (4717)***. 1: The drive starts to operate on the rising edge of this signal.
4	–	Reserved
5	–	Reserved
6	–	Reserved
7	Event Reset	0: Event Reset Inactive 1: Event Reset Active A rising edge of this signal resets events (warnings, faults, and so on), which do not have active triggering conditions. After a fault the drive goes to a Switching On Inhibited state, which must be acknowledged with bit 0.

Danfoss Drives Oy © 2025.12

Table 8: iC Generic Profile Control Word Bits - (continued)

Bit	Name	Description
8	Reference Reverse	0: The speed reference remains normal. 1: The speed reference is reversed. The reference can also be reversed with a negative setpoint. Double negatives result in a forward reference.
9	–	Reserved
10	Data Valid	0: Ignores the current process data. Uses the previously processed data when the Data Valid bit was previously true. 1: Reads the current process data. For most of the control word commands to be acknowledged by the drive, fieldbus must be the commanding control place. See options in parameter group ***Control Places*** in parameter group ***2 Parameters***.
11	Watchdog	0: Watchdog low 1: Watchdog high Continuous toggling 0–1 can be used as a sign of life between the drive and the fieldbus master. The value of this bit is also passed through the fieldbus status word as is.
12	Fieldbus Digital Input 1	0: Fieldbus Digital Input 1 inactive 1: Fieldbus Digital Input 1 active Select the value ***CTW B12*** for any input parameter to use this signal for the activation of a selected function.
13	Fieldbus Digital Input 2	0: Fieldbus Digital Input 2 inactive 1: Fieldbus Digital Input 2 active Select the value ***CTW B13*** for any input parameter to use this signal for the activation of a selected function.
14	Fieldbus Digital Input 3	0: Fieldbus Digital Input 3 inactive 1: Fieldbus Digital Input 3 active Select the value ***CTW B14*** for any input parameter to use this signal for the activation of a selected function.
15	Fieldbus Digital Input 4	0: Fieldbus Digital Input 4 inactive 1: Fieldbus Digital Input 4 active Select the value ***CTW B15*** for any input parameter to use this signal for the activation of a selected function

2.4.3 Status Word

Table 9: iC Generic Profile Status Word Bits

Bit	Name	Description
0	Ready To Switch On	0: The drive is not ready to receive a start command because of at least 1 of the following conditions is true: Fault Active, Ramp Stop Active, Coast Stop Active, or Quick Stop Active. 1: The drive is ready to accept a start command.
1	Power Unit Ready	0: The drive cannot be set running because the ready conditions of the power unit are not met. Check parameter ***Motor Control Start Ready Status Word (6207)*** for any conditions that are not met. 1: All power unit ready conditions are met.
2	Drive Running	0: The drive is not running. 1: The drive is running.
3	Fault Active	0: No active drive faults. 1: One or more drive faults are active. Switching on is inhibited.
4	–	Reserved
5	Quick Stop Active	0: The quick stop command is inactive. A new start command is required. 1: The quick stop command is active. This command can also be given from another control source than fieldbus.
6	–	Reserved
7	Warning Active	0: All drive warnings are inactive. 1: One or more drive warnings are active.
8	–	Reserved
9	Fieldbus Control Active	0: Fieldbus is not the active control place. 1: Fieldbus is the active control place.
10	–	Reserved
11	Run Enabled	0: The digital input signal ***Run Enable Input (103)*** is inactive, and modulation is disabled. 1: The digital input signal ***Run Enable Input (103)*** is active, and modulation is enabled.
12	–	Reserved
13	–	Reserved
14	–	Reserved
15	Watchdog Feedback	0: The watchdog signal that the drive has received is low. 1: The watchdog signal that the drive has received is high.

Danfoss Drives Oy © 2025.12

2.5 iC Speed

2.5.1 Overview

The iC Speed profile is used with iC7 series Generator application software. The iC Speed profile differs from the PROFIdrive profile, because it does not have a state machine. It is only controlled by the actual state 1/0 of the control bits, not the sequence in which they are manipulated.

2.5.2 Control Word

Table 10: iC Speed Profile Control Word Bits

Bit number	Name	Description
0	Speed Preset Reference Selector 1	Use these bits to select between speed presets: 00: Preset reference 1 01: Preset reference 2 10: Preset reference 3 11: Preset reference 4
1	Speed Preset Reference selector 1	Use these bits to select between speed presets: 00: Preset reference 1 01: Preset reference 2 10: Preset reference 3 11: Preset reference 4
2	–	Reserved
3	Coast Stop	0: The drive coasts to a stop. 1: The coast request is inactive. The drive can be started.
4	Quick Stop	0: The drive stops with the Quick Stop function. 1: The Quick Stop request is inactive. The drive can be started.
5	Freeze Speed Reference	0: The speed reference (input of the ramp generator) is frozen to its latest value. 1: The speed reference can be changed freely.
6	Start	0: The drive stops operating with the method determined by parameter ***Missing Start Response (4717)***. 1: The drive starts to operate on the rising edge of this signal.
7	Event Reset	The rising edge of this signal resets events (warnings, faults, and so on), which do not have active triggering conditions. 0: Event reset inactive. 1: Event reset active.
8	–	Reserved
9	Speed Ramp	0: Ramp 1 is active. Configure ramp in parameter group ***2.4.1.2 Ramp 1***. 1: Ramp 2 is active. Configure ramp in parameter group ***2.4.1.3 Ramp 2***.

Table 10: iC Speed Profile Control Word Bits - (continued)

Bit number	Name	Description
10	Data Valid	0: Ignores the current process data. Uses the previously processed data when the Data Valid bit was previously true. 1: Reads the current process data (controlled by PLC). For most of the control word commands to be acknowledged by the drive, fieldbus must be the commanding control place. See options in parameter group ***Control Places*** in parameter group ***2 Parameters***.
11	–	Reserved.
12	Fieldbus Digital Input 1	0: Fieldbus Digital Input 1 inactive 1: Fieldbus Digital Input 1 active Select the value ***CTW B12*** for any input parameter to use this signal for the activation of a selected function.
13	Fieldbus Digital Input 2	0: Fieldbus Digital Input 2 inactive 1: Fieldbus Digital Input 2 active Select the value ***CTW B13*** for any input parameter to use this signal for the activation of a selected function.
14	Fieldbus Digital Input 3	0: Fieldbus Digital Input 3 inactive 1: Fieldbus Digital Input 3 active Select the value ***CTW B14*** for any input parameter to use this signal for the activation of a selected function.
15	Fieldbus Digital Input 3	0: Fieldbus Digital Input 4 inactive 1: Fieldbus Digital Input 4 active Select the value ***CTW B15*** for any input parameter to use this signal for the activation of a selected function.

2.5.3 Status Word

Table 11: iC Speed Profile Status Word Bits

Bit number	Name	Description
0	Control Ready	0: The device controls are not ready and do not react to process data. 1: The device controls are ready and react to process data.
1	Drive Ready	0: The drive is not ready for operation. 1: The drive is ready for operation.
2	Coast	0: There is an active coast stop command and the drive is in a coast stop state. 1: There are no active coast signals. The drive can be started.
3	Fault	0: There are no active faults. 1: There is at least 1 active fault. The drive cannot be started before the fault condition is cleared and the fault is reset.
4	–	Reserved
5	–	Reserved

Danfoss Drives Oy © 2025.12

Table 11: iC Speed Profile Status Word Bits - (continued)

Bit number	Name	Description
6	–	Reserved
7	Warning	0: There are no active warnings. 1: There is at least 1 active warning. The cause of the warning should be investigated and mitigated.
8	Speed Reference	0: Speed not at reference. The motor speed differs from the given speed reference, for example, due to ramping. 1: Speed at reference. The motor speed matches the given speed reference.
9	Fieldbus Control	0: Fieldbus control inactive. None of the basic command functions of the drive are affected by fieldbus commands. 1: Fieldbus control active. Fieldbus is the active control place, or configured as part of the advanced control place.
10	Limiter	0: Limiter inactive. All limiters (regulators) are inactive. 1: Limiter active. One or more limiters (regulator) are actively limiting the drive current, torque, and so on. See parameter ***Motor Regulator Status Word (1715)*** for further details.
11	Operation	0: The drive is not modulating (operating). 1: The drive is modulating (operating).
12	–	Reserved
13	–	Reserved
14	–	Reserved
15	–	Reserved

2.6 PROFIdrive Application Class 1

2.6.1 Overview

Standard telegram 1 is implemented according to PROFIdrive Application Class 1 profile as defined in the PROFIdrive standard and state machine diagram. It can be used with iC7 series Generator application software.

2.6.2 Control Word

Table 12: Control Word Bits in PROFIdrive Standard Telegram 1

Bit number	Name	Description
0	On-Off	0: The drive cannot operate. A running drive is stopped with a ramp to zero speed. A resettable Switching On Inhibited state is reset. 1: The drive is ready to operate.
1	Coast Stop	0: The drive coasts to a stop. 1: The coast request is inactive. The drive can be started.
2	Quick Stop	0: The drive stops with the quick stop function. 1: The quick stop request is inactive. The drive is ready to operate.

Table 12: Control Word Bits in PROFIdrive Standard Telegram 1 - (continued)

Bit number	Name	Description
3	Operation	0: The drive stops operating and coasts to a stop. 1: The drive starts to operate on the rising edge of this signal.
4	Ramp Generator	0: Reset ramp generator. The output of the RFG is set to 0. The drive decelerates along the current limit or along the voltage limit of the DC link. 1: Enable ramp generator (RFG).
5	Speed Reference	0: Freeze speed reference. The speed reference (input of the ramp generator) is frozen to its latest value. 1: Unfreeze speed reference. The speed reference can be changed freely.
6	Reference	0: Disable reference. The speed reference (ramp generator input) is forced to zero. 1: Enable reference. The speed reference can be changed freely.
7	Event Reset	0: Event reset inactive. 1: Event reset active. The rising edge of this signal resets events, which do not have active triggering conditions. After a fault, the drive goes to a Switching On Inhibited state, which must be acknowledged with bit 0.
8	–	Reserved
9	–	Reserved
10	Fieldbus Control	0: Ignores the current process data. Uses the previously processed data when the Data Valid bit was previously true. 1: Reads the current process data (controlled by PLC). For most of the control word commands to be acknowledged by the drive, fieldbus must be the commanding control place. See options in parameter group ***Control Places*** in parameter group ***2 Parameters***.
11	–	Reserved
12	Fieldbus Digital Input 1	0: Fieldbus Digital Input 1 inactive. 1: Fieldbus Digital Input 1 active. Select the value ***CTW B12*** for any input parameter to use this signal for the activation of a selected function.
13	Fieldbus Digital Input 2	0: Fieldbus Digital Input 2 inactive. 1: Fieldbus Digital Input 2 active. Select the value ***CTW B13*** for any input parameter to use this signal for the activation of a selected function.

Danfoss Drives Oy © 2025.12

Table 12: Control Word Bits in PROFIdrive Standard Telegram 1 - (continued)

Bit number	Name	Description
14	Fieldbus Digital Input 3	0: Fieldbus Digital Input 3 inactive. 1: Fieldbus Digital Input 3 active. Select the value ***CTW B14*** for any input parameter to use this signal for the activation of a selected function.
15	Fieldbus Digital Input 4	0: Fieldbus Digital Input 4 inactive. 1: Fieldbus Digital Input 4 active. Select the value ***CTW B15*** for any input parameter to use this signal for the activation of a selected function.

2.6.3 Status Word

Table 13: Status Word Bits in PROFIdrive Standard Telegram 1

Bit number	Name	Description
0	Ready to Switch On	0: Not ready to switch on 1: Ready to switch on. Motor control is ready, no active faults and switching on (control word bit 0) is allowed.
1	Ready to Operate	0: Not ready to be started. The drive cannot be set running with a start command. 1: Ready to be started. Control is switched on and a start command can be given.
2	Operation	0: The drive is not running. 1: The drive is running.
3	Faults	0: All drive faults are inactive. 1: One or more drive faults is active. Switching on is inhibited.
4	Coast Stop	0: The Coast Stop command is active. 1: The Coast Stop command is inactive.
5	Quick Stop	0: The Quick Stop command is active. Switching on is inhibited. The command can be given from fieldbus or IO. 1: The Quick Stop command is inactive. A new start command is required.
6	Switching On Inhibited	0: Switching on allowed. Nothing is inhibiting the drive from being switched on (control word bit 0 can be activated). 1: Switching on inhibited due to faults or quick stop. After faults have been acknowledged or the quick stop command is removed, the Off command must be given to reset the state.
7	Warning	0: All drive warnings are inactive. 1: One or more warnings are active.

Table 13: Status Word Bits in PROFIdrive Standard Telegram 1 - (continued)

Bit number	Name	Description
8	Speed Error Within/Out of Tolerance Range	0: Speed error out of tolerance range. The actual speed differs from the speed reference more than 1% of motor nominal speed. 1: Speed error within the tolerance range. The actual speed differs from the speed reference less than 1% of motor nominal speed
9	Fieldbus Control Active/Inactive	0: Fieldbus control inactive. None of the basic command functions of the drive are affected by fieldbus commands. 1: Fieldbus control active. Fieldbus is the active control place or configured as part of the advanced control place.
10	Speed Reached/Speed not Reached	0: Speed not reached. The actual speed is below the comparison value set with parameter ***Limit Supervision 1 Threshold (5253)***. 1: Speed reached. The actual speed is above the comparison value set with parameter ***Limit Supervision 1 Threshold (5253)***.
11	–	Reserved.
12	–	Reserved.
13	–	Reserved.
14	–	Reserved.
15	–	Reserved.

2.6.4 PROFIdrive State Machine

In the PROFIdrive control profile, the control bits perform different functions:

- 0–3 perform the basic startup and power-down functions.
- 4–10 perform application-oriented control.
- 12–15 can be configured for different purposes.

See Figure 1 for the basic state transition diagram, where control bits 0–3 control the transitions and the corresponding status bit indicates the actual state. The black dots indicate the priority of the control signals. Fewer dots indicate lower priority, and more dots indicate higher priority.

The general state diagram is defined in the PROFIdrive standard.

Danfoss Drives Oy © 2025.12

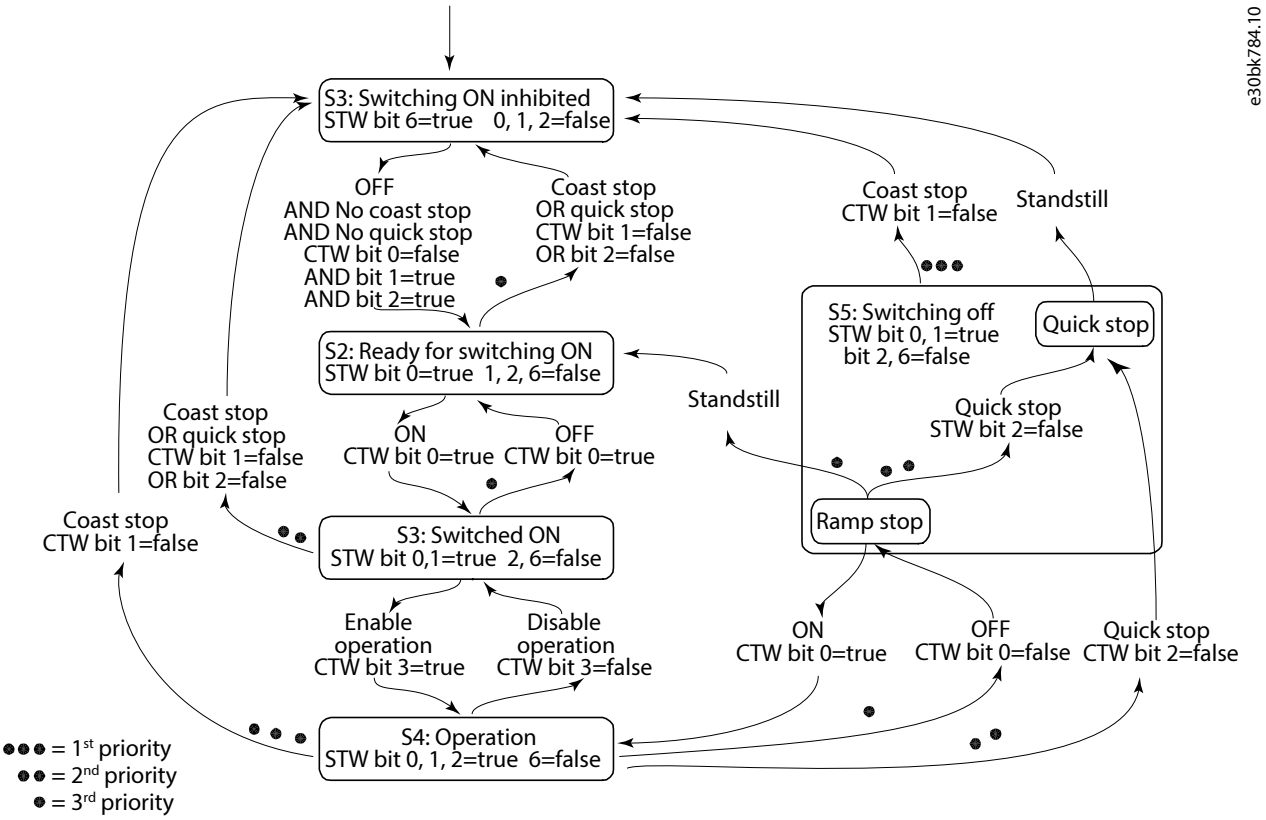

Figure 1: General State Diagram

2.7 Network Topologies

2.7.1 Overview

Communication interface X1/X2 is used for fieldbus connection.

The communication interface in the iC7 drives and power converters has 2 Ethernet ports (X1 and X2) and an embedded switch with 2 Ethernet RJ45 connectors. It has 1 MAC and IP address, and is considered a single device in the network. The communication interface supports 2 network topologies:

- Line topology
- Star topology

2.7.2 Line Topology

In many applications, line topology enables simpler cabling and the use of fewer Ethernet switches. Observe network performance and the number of devices in a line topology. Too many devices in a line may exceed network update time limits.

NOTICE

When line topology is used, take precautions to avoid timeout in the PLC when more than 8 drives or power converters are installed in series. Each drive or power converter in the network adds a small delay to the communication due to the built-in Ethernet switch. When the update time is too short, the delay can lead to a timeout in the PLC.

- Set the update time as shown in the table. The numbers given are typical values and can vary from installation to installation.

Number of units connected in series	Minimum update time [ms]
<8	2
8–16	4
16–32	8
33–50	16
>50	Not recommended

NOTE: Using tools such as MyDrive® Insight may influence system performance in a line topology.

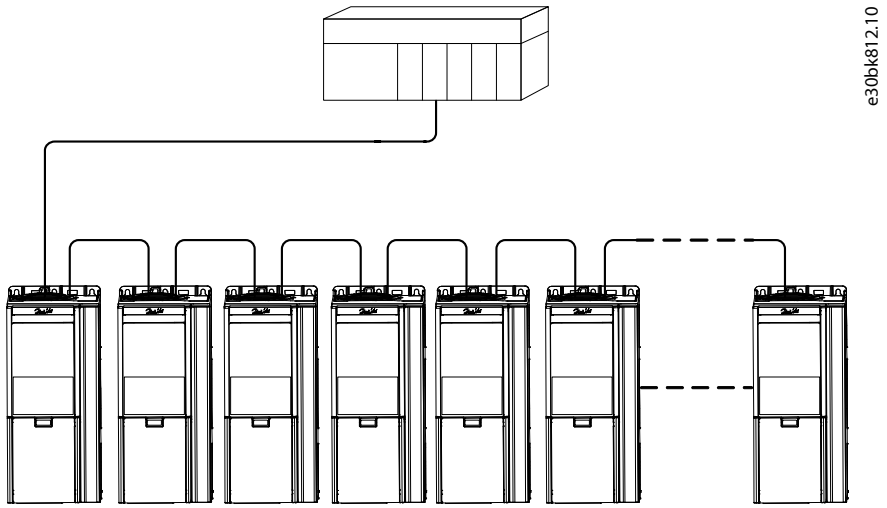

Figure 2: Example of Line Topology

NOTICE

Installing drives or power converters of different current ratings in line topology may result in unwanted power-off behavior.

- Mount the drives or power converters with the longest discharge time first in the line topology. In normal operation, the drives or power converters with bigger current ratings have a longer discharge time.

2.7.3 Star Topology

In a star network, all devices are connected to the same switch or switches. Star topology reduces the damage caused by a single cable failure. In a star topology, a single cable failure affects a single device instead of all devices in the network. In many applications, this topology enables simpler cabling depending on the location and distance of the device.

Danfoss Drives Oy © 2025.12

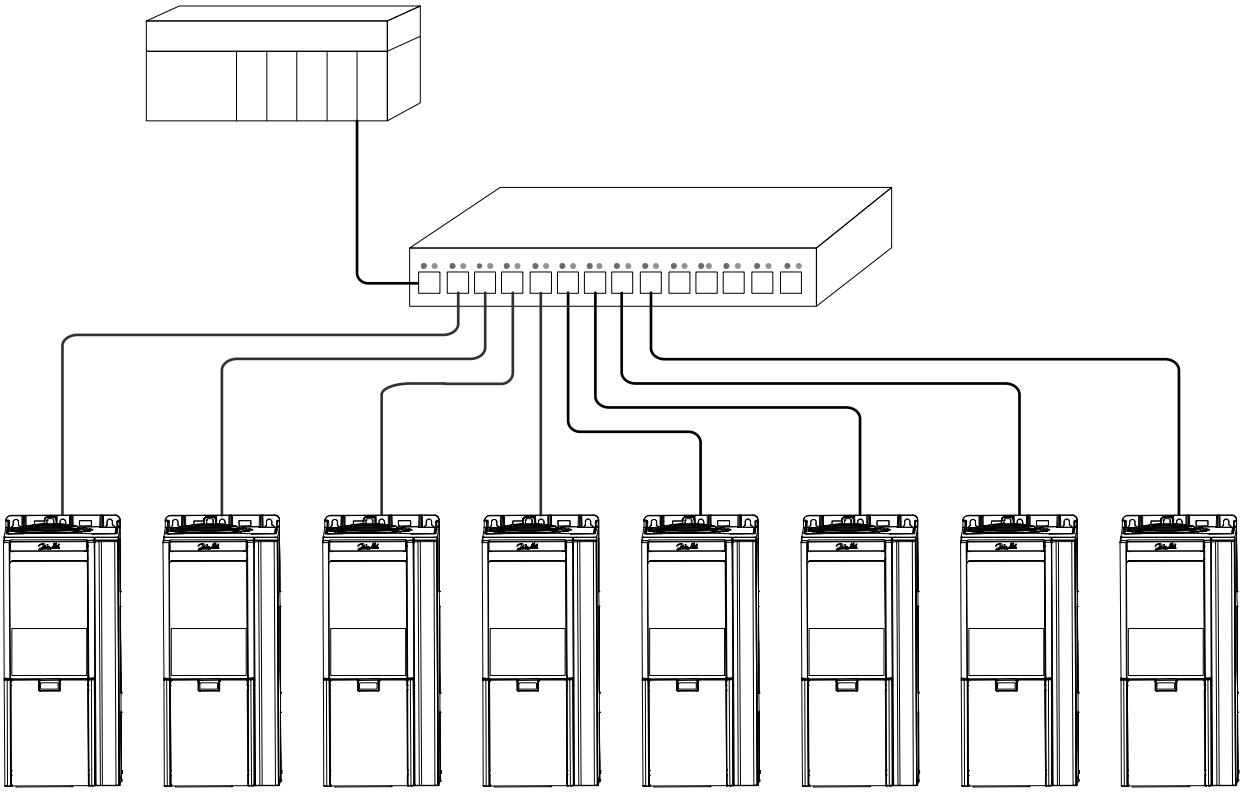

Figure 3: Example of Star Topology

3 Modbus Data Mapping

3.1 Mapping Modbus Coils

A Modbus coil is a single-bit binary data item which can be both read and written. Coils can be mapped to specific bits in a parameter by using the customization feature in MyDrive® Insight.

Only bit-type parameters can be mapped to coils. The source type must be INT, UINT, USINT DINT, UDINT, WORD, or BOOL.

1. In MyDrive® Insight, go to *Customization* > *Live* > *MODBUS* > *Coils*.
   - To add a single coil, click the + *Add Item* icon.
   - To map multiple coils to a single parameter, click the – *Add Multiple Items* icon.

Table 14: Coil Mapping Settings

Column	Description
Location	Refers to the coil number. Coils are mapped from address 00000–0FFFF.
Reference type	• ***Terminal***: Mapping a terminal on an option to a coil. • ***Parameter***: Mapping a specific bit of a parameter to a coil. • ***Feature***: Functions such as store and restore.
Reference	The name of the mapped parameter, feature, or event.
Source type	Data type of mapped parameter
Index	Index pointer for array parameters
Bit number	Mapped bit number of the selected parameter. 0 refers to the 1st bit.
Permissions	Setting Read/Write permissions for each coil.
Watchdog	***Watchdog1***: Process data timeout watchdog. Timeout time is configured in parameter ***Process Data Timeout Delay (1340)***. The Watchdog timer is (re)triggered when writing to the mapped coil or register. ***Watchdog2***: Not used

3.2 Mapping Modbus Holding Registers

A Modbus holding register is a bit binary data item which can be both read and written. Registers can be mapped to a specific parameter by using the customization feature in MyDrive® Insight. The first 19 holding registers are pre-mapped or reserved and cannot be changed. From location 20 onwards, registers can be mapped freely.

IMPORTANT: The parameter mapped to 1 register can only be remapped to another register. During the mapping, pay special attention to parameters that have a wrench symbol next to their name. These parameters must not be written or changed cyclically.



e30bm445.10

Figure 4: Example of Parameters during Modbus Holding Register Mapping

NOTICE

A mismatch between the data type and register type issues a warning of possible data loss.

Danfoss Drives Oy © 2025.12

Table 15: Holding Register Mapping

Location	Reference type	Reference (parameter number)	
		DC/DC Converter, Grid Converter	Generator
1	Parameter	–	***Fieldbus Profile (1301)***
2	Parameter	***Fieldbus Control Word (1335)***	***FB PCD Control Word (1335)***
3	Parameter	Reserved	***FB PCD Main Reference Value (1339)***
4	Parameter	Reserved	Reserved
5	Parameter	Reserved	Reserved
6	Parameter	Reserved	Reserved
7	Parameter	Reserved	Reserved
8	Parameter	Reserved	Reserved
9	Parameter	Reserved	Reserved
10	Parameter	***Fieldbus Status Word (1307)***	***FB PCD Status Word (1307)***
11	Parameter	Reserved	***FB PCD Main Actual Value (1308)***
12	Parameter	Reserved	Reserved
13	Parameter	Reserved	Reserved
14	Parameter	Reserved	Reserved
15	Parameter	Reserved	Reserved
16	Parameter	Reserved	Reserved
17	Parameter	Reserved	Reserved
18	Parameter	Reserved	Reserved
19	Parameter	Reserved	Reserved
20	...	...	...
…	…	...	...

1. In MyDrive® Insight, go to *Customization* > *Live* > *MODBUS* > *Holding Registers*.
   - To add a single register, click the + *Add Item* icon.
   - To add multiple registers, click the – *Add Multiple Items* icon.

Table 16: Holding Register Settings

Column	Description
Location	Refers to the register number. Coils are mapped from address 00000–0FFFF.
Reference type	• ***Terminal***: Mapping a terminal on an option to a register. • ***Parameter***: Mapping a parameter to a register. • ***Constant***: Mapping a constant value to a register. • ***Feature***: Mapping a register to a feature, for example, Factory restore. • ***Event***: Mapping events to registers.
Reference	The name of the mapped parameter, feature, or event. Value for ***Constant*** type.
Source type	Data type of mapped parameter.

Table 16: Holding Register Settings - (continued)

Column	Description
Index	Index pointer for array parameters.
Length	Number of bytes for string-type parameters.
Register type	Data type of the mapped parameter. By default, the Customizer selects a register type that matches the data type of the selected parameter.
Scaling	Scales the parameter value on the Modbus interface by dividing it by the scaling value entered.
Unit	Unit of the mapped parameter
Permissions	Setting Read/Write permissions for each register.
Watchdog	***Watchdog1***: Process data timeout watchdog. Timeout time is configured in parameter ***Process Data Timeout Delay (1340)***. The Watchdog timer is triggered when writing to the mapped coil or register. ***Watchdog2***: Not used

Mapping parameter of the REAL 32-bit data type results in 2 consecutive register mappings.

Table 17: Example of a Holding Register Mapping

Location	Reference type	Reference (parameter number)	Source type	Register type
20	Parameter	***Converter Output Current (9000)***	REAL	Two Consecutive Floating point
22	Parameter	***Heat Sink Temperature (2950)***	REAL	Two Consecutive Floating point
...	...	...	...	...

Events from the device event log can be mapped into holding registers, starting from the most recent event. Each event results in 6 consecutive register mappings.

Table 18: Example of an Event Register Mapping

Register	Description	Format
n	Timestamp	Seconds/milliseconds [SS.SSS][1]
n+1		Hours/Minutes [HHMM][1]
n+2		Month/Day [MMDD][1]
n+3		Year [YYYY][1]
n+4	Event Type	• MSB: 0 = Inactive event • MSB: 1 = Active event • LSB: 010 = Info • LSB: 011 = Warning • LSB: 100 = Fault
n+5	Event Code	See the application guide for the application software in use.

1) Readable in hexadecimal format

Danfoss Drives Oy © 2025.12

3.3 Mapping Modbus Input Registers

A Modbus input register is a 16-bit read-only value.

Input registers can be mapped to specific parameters by using the customization feature in MyDrive® Insight.

1. In MyDrive® Insight, go to *Customization* > *Live* > *MODBUS* > *Coils*.
   - To add a single register, click the + *Add Item* icon.
   - To add multiple registers, click the – *Add Multiple Items* icon.

Table 19: Coil Mapping Settings

Column	Description
Location	Refers to the coil number. Coils are mapped from address 00000–0FFFF.
Reference type	• Parameter: Mapping a register to a parameter. • Constant: Mapping a register to a constant value. • Event: Mapping events to registers.
Reference	The name of the mapped parameter, feature, or event. Value for ***Constant*** type.
Source type	Data type of mapped parameter
Index	Index pointer for array parameters.
Length	Length as number of bytes for string-type parameters.
Register type	Data type of the mapped parameter. By default, the Customizer selects a register type that matches the data type of the selected parameter.
Scaling	Scales the parameter value on the Modbus interface by dividing it by the scaling value entered.
Unit	Unit of the mapped parameter.

3.4 Setting Permissions

Permissions can be set either in the *Permissions* column in the mapping view, or in the *Permissions* view in MyDrive® Insight.

1. In MyDrive® Insight, go to *Customization* > *Live* > *MODBUS* > *Permissions*.
2. Set the Read/Write permission for coils and registers:
   - By using the *Permissions* column in the mapping view.
   - By using the *Permissions* view in MyDrive® Insight.

> **!** IMPORTANT: Individual settings for each coil or register overwrite the default selection ***ALL***. If the permission is not set for a specific coil, or register, the selection ***ALL*** is predominant.

3.5 Saving Modbus Configuration to a Device

After the Modbus mapping is finalized, the configuration can be saved as a new project or added to an existing MyDrive® Insight project.

1. To save a configuration, click the *Save* icon.
2. To deploy a configuration directly into a device, click the *Download* icon to create and save an export package (*.vpkg).
3. After exporting the configuration, update and power cycle the device with the exported software package.

Table 20: Example of an Export Package

Package name (Default: Fully Qualified Domain Name)	###
Package version (Default: 1.0.0)	###

Danfoss Drives Oy © 2025.12

4 Fieldbus Cable Connections

4.1 Prerequisites for Installation

Communication interfaces are integrated in the control board in iC7 drives and power converters.

The position of the connections differs based on the control board concept and frame, for example. For more information on the location of the connections, cabling, and shielding, refer to the product-specific design guide.

4.2 Installation in Frequency Converters

4.2.1 Communication Interface X1/X2 in Frames FA02–FA12

The communication interface is on the top of the frequency converter as shown in Figure 5. Industrial-grade RJ45 connectors are recommended for optimal connection. A combined shield/fixing plate, the Fieldbus EMC plate, is available as an accessory to strengthen the mechanical fixation of the cables. For information on ordering the EMC plate, refer to the product-specific design guide.

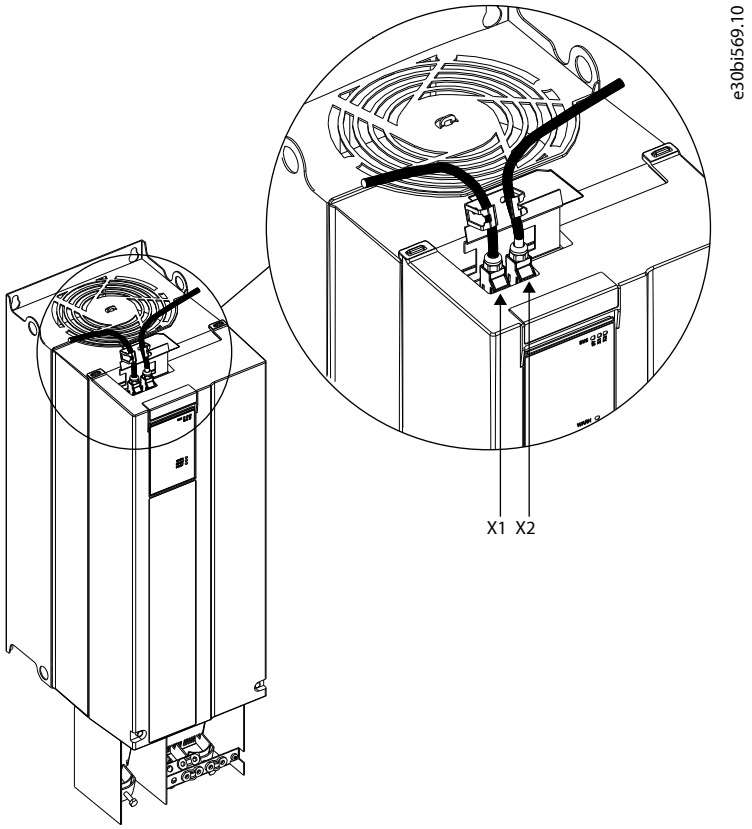

Figure 5: Location of the Communication Interface, X1/X2 in FA02-FA12 Frames (with the Optional EMC Plate)

4.2.2 Communication Interface X1/X2 in Frames FB09–FB12/FK06–FK12

The communication interface ports are located inside the frequency converter. The position of the ports and the recommended wiring path are shown in Figure 6 and Figure 7.

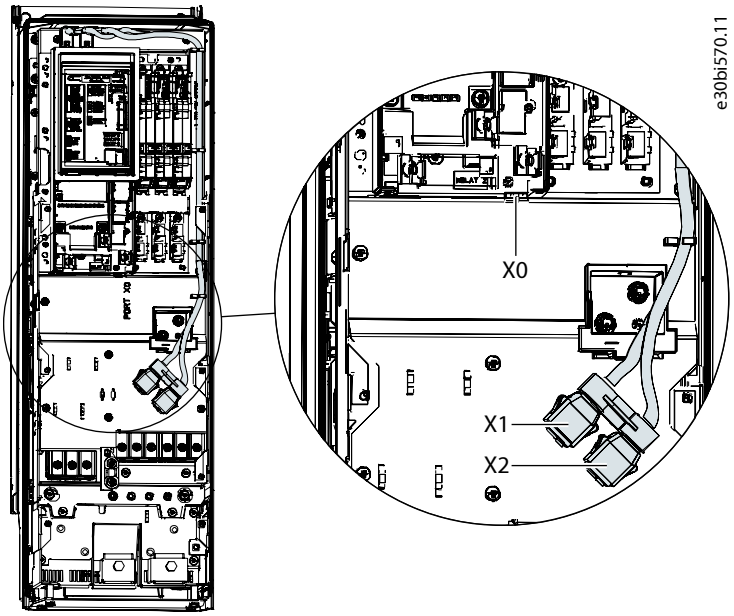

Figure 6: Communication Port X0, X1, and X2 Locations in FK06–FK08 Frames

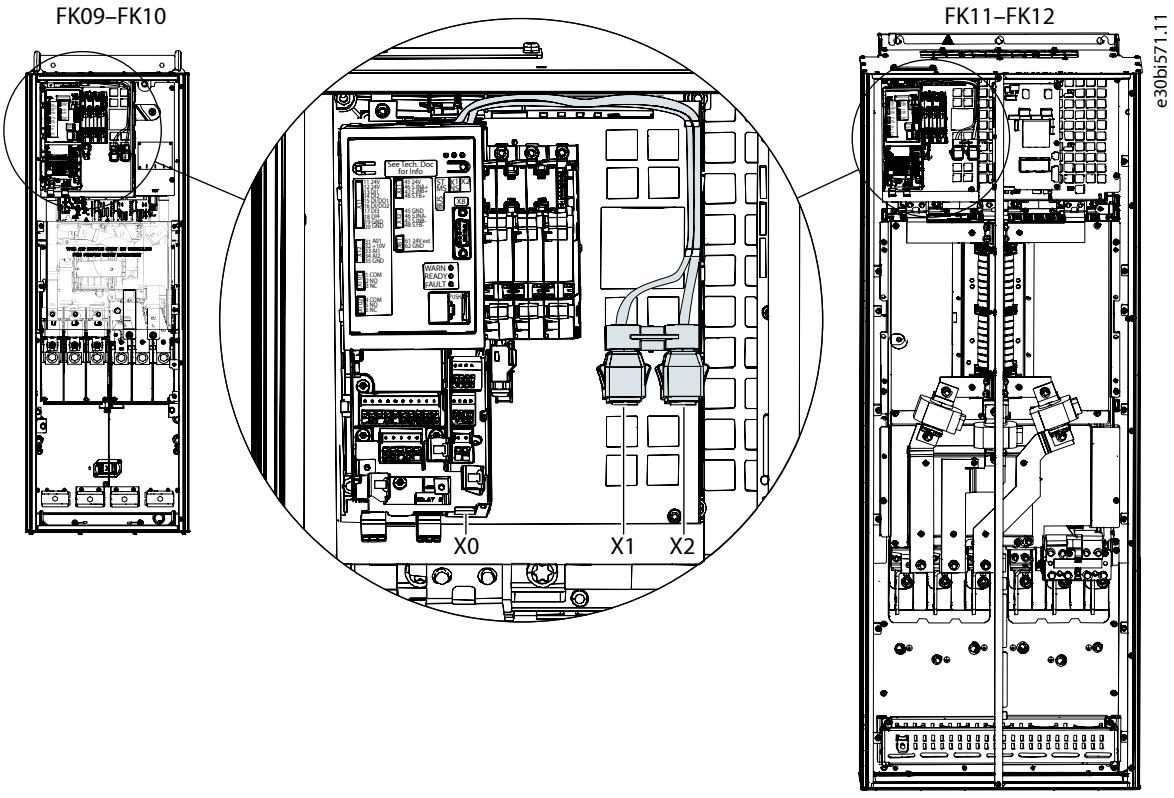

Figure 7: Communication Port X0, X1, and X2 Locations in FB09–FB12/FK09–FK12 Frames

4.3 Installation in System Modules

4.3.1 Communication Interface X1/X2 in System Modules

For systems that use system modules, the communication interface ports are located at the bottom facing side of the modular control unit as shown in Figure 8.

Danfoss Drives Oy © 2025.12

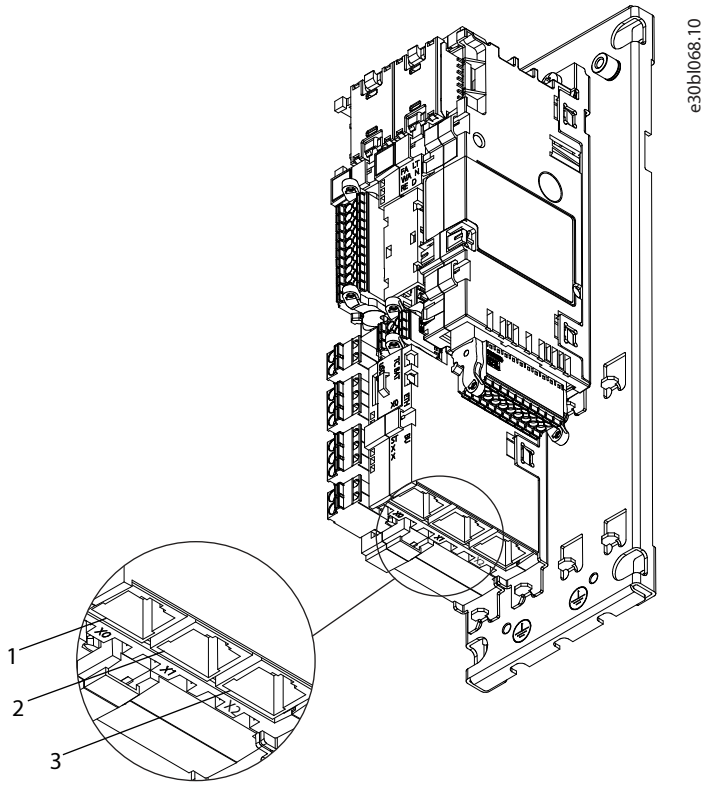

Figure 8: Communication Port X0, X1, and X2 Locations in the Modular Control Unit

1	Ethernet port (X0)	2	Ethernet port (X1)
3	Ethernet port (X2)		

4.4 EMC-compliant Installation

4.4.1 Overview

To obtain an EMC-compliant installation, follow the instructions provided in the product-specific design guide and the installation guide included in the shipment.

4.4.2 Grounding

- Ensure that all stations connected to the fieldbus network are connected to the same ground potential. When distances between the stations in a fieldbus network are long, connect the individual station to the same ground potential. Install equalizing cables between the system components.
- Establish a grounding connection with low HF impedance, for example, by mounting the unit on a conductive backplate.
- Keep the ground wire connections as short as possible.

4.4.3 Cable Routing

For more information on cabling, refer to the product-specific design guide and installation guide included in the shipment.

NOTICE

EMC INTERFERENCE

Failure to isolate fieldbus communication, motor, and brake resistor cables can result in unintended behavior or reduced performance.

- Use shielded cables for motor and control wiring, and separate cables for fieldbus communication, motor wiring, and brake resistor.
- A minimum of 200 mm (7.9 in) clearance between power, motor, and control cables is required. For power sizes above 315 kW (450 hp), increase the minimum distance to 500 mm (20 in).

NOTICE

CABLE ROUTING

- When the fieldbus cable intersects a motor cable or a brake resistor cable, ensure that the cables intersect at an angle of 90°.

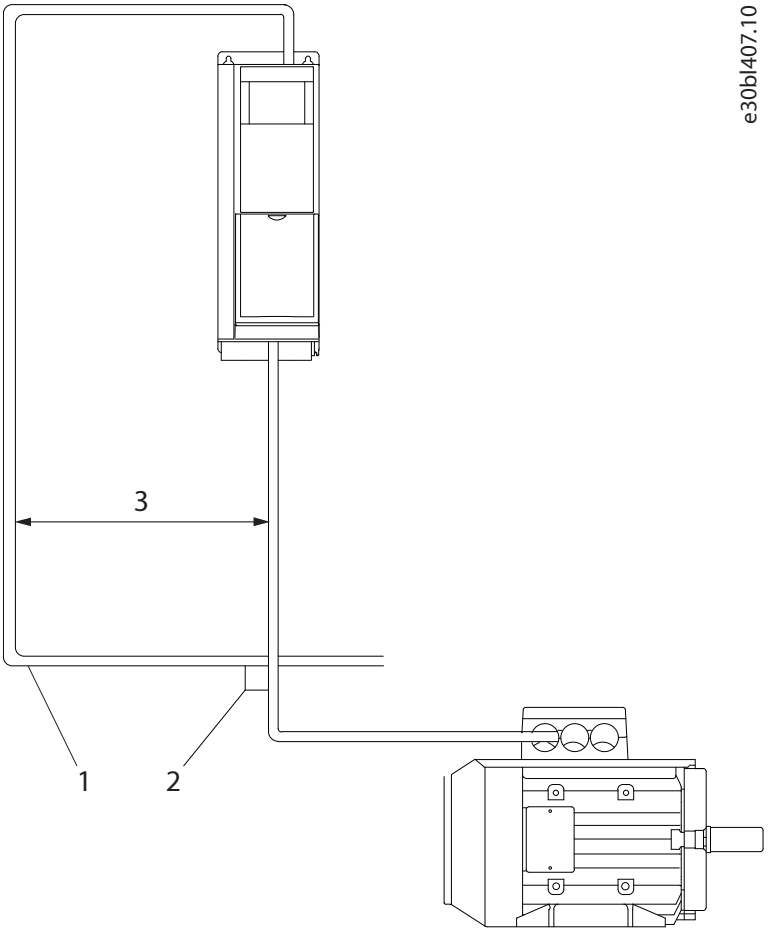

Figure 9: Cable Routing

1	Fieldbus cable	2	90° intersection
3	≥200 mm (7.9 in) (≥ 500 mm (20 in) for power sizes >315 kW (450 hp))		

Danfoss Drives Oy © 2025.12

5 Configuration

5.1 Selecting the Fieldbus Profile

For more information about the available profiles for the application in use, see 2.2 Communication Profiles and Objects.

1. Navigate to *Parameters* > *Control Places* > *Fieldbus Control* > *Fieldbus Profile*.
2. Select the fieldbus profile.

The selection affects the interpretation of the control word and status word. Selecting a profile may also automatically set specific values for certain parameters or affect control schemes. For details, refer to the application guide.

5.2 Configuring Fieldbus Protection Settings for the DC/DC Converter Application

When using the iC7 series DC/DC Converter application, the fieldbus profile is selected automatically.

1. Navigate to ***Parameters*** > ***Protections and Responses*** > ***Fieldbus Protections***.
2. Configure fieldbus protection settings.

Table 21: Fieldbus Protection Setting Parameters for DC/DC Converter

Parameter	Parameter number	Value	Description
Fieldbus Fault Response	1304	• No response • Info • Warning • Fault (default) See Table 22 for descriptions of the events.	Select the behavior when a fieldbus fault, for example, loss of I/O connection occurs.
No Fieldbus Connection Response	1305	• No response (default) • Info • Warning • Fault See Table 22 for descriptions of the events.	Select the response if there is no fieldbus connection.
Process Data Timeout Response	1306	• No response • Info (default) • Warning • Fault	Select the response when a process data timeout occurs.
Process Data Timeout Delay	1340	50.0–3.4 x 10^{38} s (Default value: 1000.0 s)	Set a delay for the triggering of the Process Data Timeout event. If process data has not been updated within this delay time, the event is triggered.
Fieldbus Watchdog Response	5244	• No response • Info • Warning (default) • Fault	Select the drive response for the fieldbus watchdog event.

Table 21: Fieldbus Protection Setting Parameters for DC/DC Converter - (continued)

Parameter	Parameter number	Value	Description
Fieldbus Watchdog Delay	5245	0.0–3000.0 s (Default value: 5.00 s)	Set a delay for activating the fieldbus watchdog event.
Fieldbus Watchdog Start Delay	5246	0.0–3000.0 s (Default value: 30.00 s)	Set the startup delay time for activating the fieldbus watchdog event. The counter starts when the converter wakes up.

Table 22: Event Descriptions

Value	Description
No response	The event is ignored.
Info	The event is logged in the event log.
Warning	The drive or power converter issues a warning.
Fault	The drive or power converter issues a fault and modulation is stopped.

5.3 Configuring Fieldbus Protection Settings for the Grid Converter Application

When using the iC7 series DC/DC Converter application, the fieldbus profile is selected automatically.

1. Navigate to ***Parameters*** > ***Protections and Responses*** > ***Fieldbus Protections***.
2. Configure fieldbus protection settings.

Table 23: Fieldbus Protection Setting Parameters for Grid Converter

Parameter	Parameter number	Value	Description
Fieldbus Fault Response	1304	• No response • Info • Warning • Warning, Current Lim. Ramp – Persistent • Fault (default) • Fault, Open MCB See Table 24 for descriptions of the events.	Select the behavior when a fieldbus fault, for example, loss of I/O connection occurs.
No Fieldbus Connection Response	1305	• No response (default) • Info • Warning • Warning, Current Lim. Ramp – Persistent • Fault • Fault, Open MCB See Table 24 for descriptions of the events.	Select the response if there is no fieldbus connection.

Danfoss Drives Oy © 2025.12

Table 23: Fieldbus Protection Setting Parameters for Grid Converter - (continued)

Parameter	Parameter number	Value	Description
Process Data Timeout Response	1306	• No response • Info (default) • Warning • Warning, Current Lim. Ramp – Persistent • Fault • Fault, Open MCB See Table 24 for descriptions of the events.	Select the response to a process data timeout.
Process Data Timeout Delay	1340	50.0–3.4 x 10^{38} s (Default value: 1000.0 s)	Set the timeout time. If process data is not received within the time set, a process data timeout is triggered.
Fieldbus Watchdog Response	5244	• No response • Info • Warning (default) • Warning, Current Lim. Ramp – Persistent • Fault • Fault, Open MCB	Select the drive response for the fieldbus watchdog event.
Fieldbus Watchdog Delay	5245	0.0–3000.0 s (Default value: 5.00 s)	Set a delay for activating the fieldbus watchdog event.
Fieldbus Watchdog Start Delay	5246	0.0–3000.0 s (Default value: 30.00 s)	Set the startup delay time for activating the fieldbus watchdog event. The counter starts when the converter wakes up.

Table 24: Event Descriptions

Value	Description
No response	The event is ignored.
Info	The event is logged in the event log.
Warning	The drive or power converter issues a warning.
Warning, Current Lim. Ramp – Persistent	The drive or power converter issues a warning, and the positive/negative active current limits are ramped to preset values. The current limit overrides stay active until the warning is acknowledged by a reset.
Fault	The drive or power converter issues a fault and stops modulation.
Fault, Open MCB	The drive or power converter issues a fault, stops modulation, and opens the main circuit breaker.

5.4 Configuring Fieldbus Protection Settings for the Generator Application

1. Navigate to ***Parameters*** > ***Protections and Responses*** > ***Fieldbus Protections***.
2. Configure fieldbus protection settings.

Table 25: Fieldbus Protection Setting Parameters for Generator

Parameter	Parameter number	Value	Description
Fieldbus Fault Response	1303	• No response • Info (default) • Warning • Warning, ramp to coast • Fault, coast See Table 26 for descriptions of the events.	Select the behavior when a fieldbus fault, for example, loss of I/O connection occurs.
Process Data Timeout Response	5291	• No response (default) • Info • Warning • Fault, ramp to coast • Fault, coast See Table 26 for descriptions of the events.	Select the response to a process data timeout.
Process Data Timeout Delay	1340	50.0–3.4 x 10^{38} s (Default value: 1000.0 s)	Set a delay for the triggering of the Process Data Timeout event. If process data has not been updated within this delay time, the event is triggered.
Fieldbus Watchdog Response	5244	• No response (default) • Info • Warning • Fault, ramp to coast • Fault, coast See Table 26 for descriptions of the events.	Select the drive response for the fieldbus watchdog event.
Fieldbus Watchdog Delay	5245	0.0–3000.0 (Default value: 5.0 s)	Set a delay for activating the fieldbus watchdog event.
Fieldbus Watchdog Start Delay	5246	0.0–3000.0 (Default value: 30.0 s)	Set a startup delay time for activating the fieldbus watchdog event. Counter begins when drive wakes up.
FB Monitoring Control Place Dependency	1338	• Disabled • Enabled (default)	Set the control place dependency for fieldbus monitoring functions (Fieldbus Fault, Process Data Timeout, and Fieldbus Watchdog). When enabled the monitoring functions are active only in the fieldbus control place. When disabled the functions are active regardless of control place.

Danfoss Drives Oy © 2025.12

Table 26: Event Descriptions

Value	Description
No response	The event is ignored.
Info	The event is logged in the event log.
Warning	The drive or power converter issues a warning.
Fault, ramp to coast	The drive or power converter issues a fault, and ramps the motor speed to 0 before stopping modulation.
Fault, coast	The drive or power converter issues a fault and modulation is stopped.

5.5 Configuring the Ethernet Interface

The X1 and X2 interfaces are internally connected with an Ethernet switch and share the same physical MAC layer, and the same IP settings apply to both interfaces. IPv4 settings are configured in MyDrive® Insight or in the control panel.

1. Configure IPv4 settings.
   - In MyDrive® Insight, go to *Setup and Service* > *Interface configuration* > *Interface X1/X2* > *IPv4 settings*.
   - In the control panel, navigate to parameter group ***Communication Interfaces***.

> **!** IMPORTANT: To ensure that outgoing IP packets are routed correctly, configure the IP addresses of the X1/X2 interfaces to a different subnet than the IP address of the X0 interface.

Table 27: IPv4 Settings

Function	Value	Description
Interface X1/X2 MAC address	00:1B:08: xx:xx:xx	The MAC address of interface X1/X2. The value is read-only.
IPv4 addressing method	Disable	Only link-local IP address in the 169.254.xxx.xxx range is active.
	Static IP	A static IP address is entered manually.
	Automatic	IP address is assigned via a DHCP or BOOTP server.
Requested IPv4 address	xxx.xxx.xxx.xxx	If ***Automatic*** is selected as the IPv4 addressing method and no DHCP/BOOTP server is present, the X1/X2 interface automatically configures an IP address and subnet mask in the 169.254.xxx.xxx range.
Requested IPv4 subnet mask	xxx.xxx.xxx.xxx	The requested IPv4 subnet mask for the interface.
Requested IPv4 gateway address	xxx.xxx.xxx.xxx	Requested IPv4 gateway address for the interface.
Enable ACD	Enable	Request to enable or disable Address Conflict Detection for the interface. The change does not take effect before a power cycle is performed. If no conflicts are detected, ACD activity shows 0. If an address conflict occurs, the ACD activity shows 1, and the IPv4 interface reverts to an automatically assigned IP address in the 169.254.xxx.xxx range.
	Disable (default)	
DNS server 1, 2	xxx.xxx.xxx.xxx	The user-requested Domain Name Server 1 for the interface (for manual IP addressing mode only).

Table 28: Ethernet Port Configuration (X1/X2)

Parameter name	Parameter number	Selections	Description
Link Configuration X1	7048	• Auto negotiation • 10 Mbps full duplex • 10 Mbps half duplex • 100 Mbps full duplex • 100 Mbps half duplex	Configures the Ethernet link parameter
Link Configuration X2	7049		

5.6 Configuring Modbus Unit Identifier

In Modbus TCP, the device is addressed by its IP address, and the server ID is replaced by a single-byte unit identifier.

IMPORTANT: Value 255 (0xFF) must be used for the Modbus unit identifier (client ID).

When configuring the Modbus PLC client, a server ID, or a server address is used to address the serial Modbus RTU devices in the range of 1–247.

In Modbus TCP, an IP address and a single-byte unit identifier are used to address the device.

5.7 Configuring Modbus Data Settings

Use MyDrive® Insight or the control panel to select persistent storage and the byte and word order for Modbus communication.

1. Using MyDrive® Insight or the control panel, navigate to parameter group ***Modbus TCP*** > ***Configuration***.

Table 29: Parameters for Modbus Data Settings

Parameter name	Parameter number	Value	Description
Persistent Storage	7061	• Disable • Enable	Persistent Storage enables storing parameters written via Modbus in non-volatile memory. IMPORTANT: Enabling ***Persistent Storage*** causes a decrease in Modbus communication performance.
Byte Order	7062	• Little Endian • Big Endian (default)	Byte order of holding register.
Word Order	7063	• Little Endian (default) • Big Endian	Word order when mapping parameters (for example, 32-bit REAL) in multiple registers.

Danfoss Drives Oy © 2025.12

6 Troubleshooting

6.1 Configuring Port Mirroring Settings

Enable or disable the port mirroring function for network troubleshooting with a network analyzer tool.

1. In MyDrive® Insight, go to *Setup and Service* > *Interface Configuration* > *Port Mirroring Settings*.

Table 30: Port Mirroring Settings

Function	Selections	Description
Source port	• X1 • X2	Frames are mirrored from this port.
Destination port	• X1 • X2	Frames are mirrored to this port.
Block RX from destination port	Enable/Disable	Device does not receive any frames from Destination Port when enabled.
Enable port mirroring	Enable/Disable	Enables the Port Mirroring feature.

6.2 Identifying a Unit

The winking function makes the fieldbus indicator LEDs ST, X1, and X2 flash yellow to make it easy to identify a unit. The function is enabled in MyDrive® Insight.

1. In MyDrive® Insight, click the device name in live mode.
2. Select *Device Status*.
3. To activate or deactivate the feature, click the toggle switch.

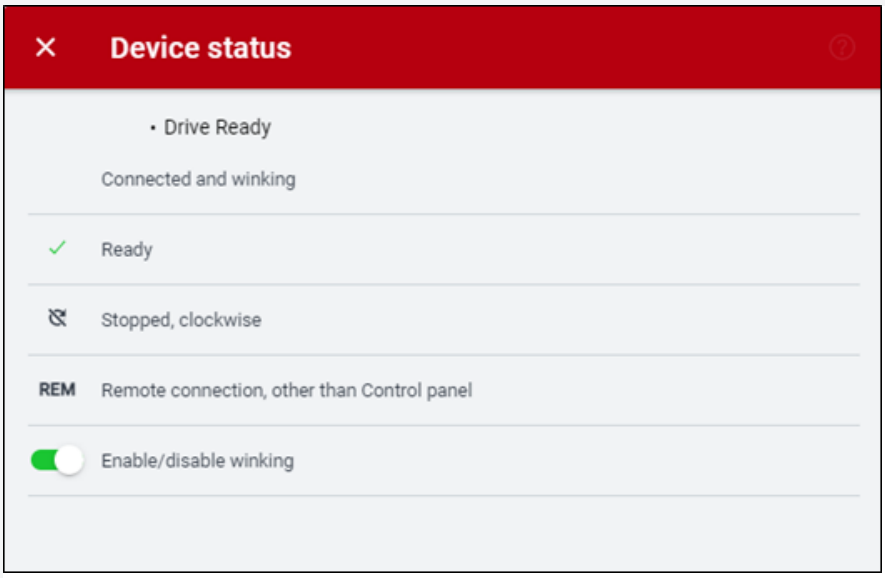

e30bk763.10

See 6.3 Fieldbus Indicator LEDs for more information on interpreting the LED signals and where the LEDs are located.

6.3 Fieldbus Indicator LEDs

The fieldbus indicator LEDs are in the top right corner of the control panel and the bottom part of the front-facing side of the modular control unit.

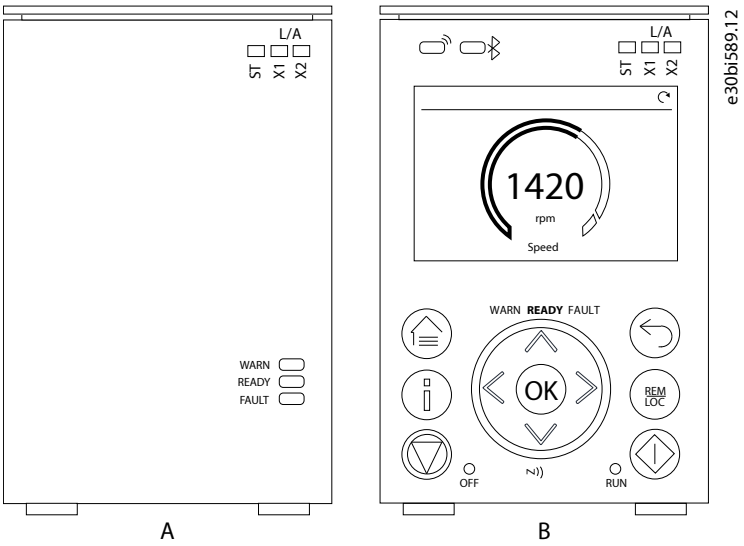

Figure 10: Fieldbus Indicator LEDs on Control Panel

A	Blind Panel	B	Control Panel 2.8

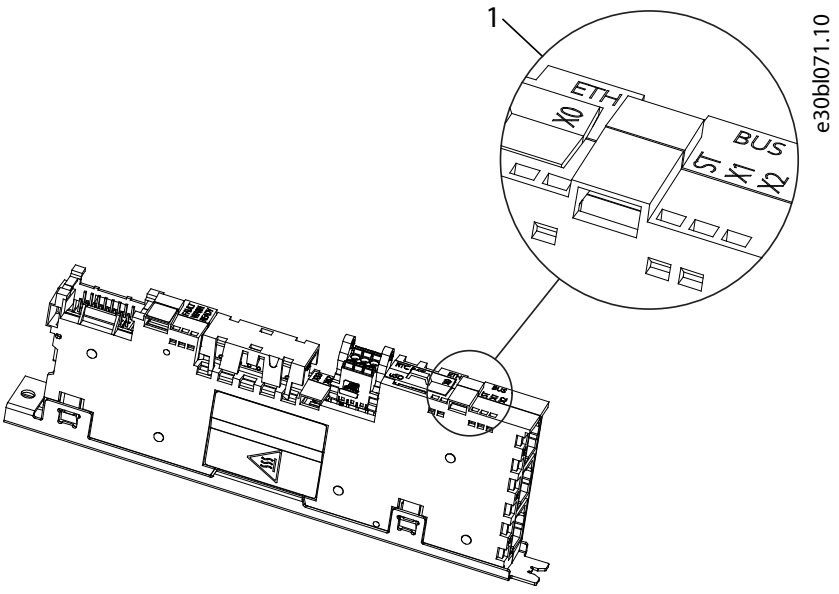

1	Fieldbus indicator LEDs (ST, X1, and X2)

Figure 11: Fieldbus Indicator LEDs on Modular Control Board

- The LED labeled ST shows the module status.
- The LED labeled X1 shows the network status on Ethernet port X1.
- The LED labeled X2 shows the network status on Ethernet port X2.

Danfoss Drives Oy © 2025.12

Table 31: Fieldbus Indicator LED Functions

LED label	Status	LED pattern	Description
ST	Standby	Flashing green	No active Modbus TCP connections.
	I/O connection ok	Solid green	Modbus TCP connection active.
	Lost Modbus connection	Flashing red	A Modbus TCP connection has failed, but 1 is still active (loss of I/O connection).
	Lost all Modbus connections	Steady red	Modbus TCP connections have failed (no I/O connection).
X1/X2	Link down	Off	–
	Link up	Solid green	Ethernet link is active.
	Cable fault	Solid yellow	The device has detected an Ethernet cable fault.
	Collision	Flashing yellow	Collision detected
	Duplicated IP address	Solid red	IP configuration error

7 Modbus Features

7.1 Data Objects

Table 32: Supported Object Types

Object type	Access	Size
Coil	Read/write	1 bit
Input register	Read only	16 bits
Holding register	Read/write	16 bits

7.2 Function Codes

The function code of a message frame contains 8 bits. Valid codes are in the range of 1–FF. Use function codes to send messages between client and server. When a message is sent from a client to a server device, the function code tells the server which action to perform. When the server responds to the client, it uses the function code to indicate either a normal (error-free) response, or that some error occurred (called an exception response). For a normal response, the server echoes the original function code. For an exception response, the server returns a code that is equivalent to the original function code with its most significant bit set to logic 1. Furthermore, the server places a unique code into the data field of the response message. It tells the client which error occurred, or the reason for the exception.

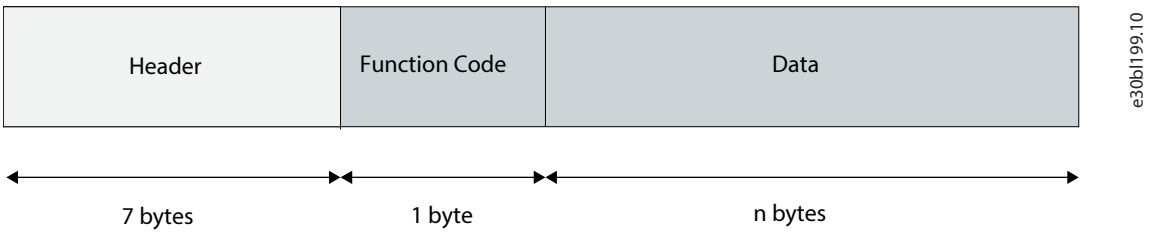

Figure 12: Modbus TCP Frame

Table 33: Supported Function Codes

Function code		Object type	Access type	Address range
Dec	Hex			
1	1	Read coils	Discrete (1 bit)	00001–09999
3	3	Read multiple holding registers	Register (16 bit)	40001–49999
4	4	Read input registers	Register (16 bit)	30001–39999
5	5	Write single coils	Discrete (1 bit)	00001–09999
6	6	Write single holding register	Register (16 bit)	40001–49999
15	F	Write multiple coils	Discrete (1 bit)	00001–09999
16	10	Write multiple holding registers	Register (16 bit)	40001–49999
23	17	Read/write multiple registers	Register (16 bit)	40001–49999
43	28	Read device ident	MEI	–

Danfoss Drives Oy © 2025.12

7.3 Data Field

The data field is constructed using sets of 2 hexadecimal digits in the range of 00–FF hexadecimal. These digits are made up of 1 TCP character. The data field of messages sent from a client to a server device contains extra information, which the server must use to act as defined by the function code. It can include items such as coil, or register addresses, the quantity of items to be handled, and the count of actual data bytes in the field.

7.4 Read Device Identity

The Read Device Identity function code is for reading the device manifest data via Modbus Encapsulated Interface transport.

Table 34: Request Structure

Function code	0x2B
MEI type	0x0E
MEI type specific data	Object ID See Table 35.

Table 35: Object IDs

Object ID	Object name/description	Type
0x00	VendorName	ASCII String
0x01	ProductCode	ASCII String
0x02	MajorMinorRevision	ASCII String
0x03	VendoreUrl	ASCII String
0x04	ProductName	ASCII String
0x05	ModelName	ASCII String
0x06	UserApplicationName	ASCII String

Danfoss Drives Oy
Runsorintie 7
FIN-65380 Vaasa
drives.danfoss.com

Any information, including, but not limited to information on selection of product, its application or use, product design, weight, dimensions, capacity or any other technical data in product manuals, catalog descriptions, advertisements, etc. and whether made available in writing, orally, electronically, online or via download, shall be considered informative, and is only binding if and to the extent, explicit reference is made in a quotation or order confirmation. Danfoss cannot accept any responsibility for possible errors in catalogs, brochures, videos and other material. Danfoss reserves the right to alter its products without notice. This also applies to products ordered but not delivered provided that such alterations can be made without changes to form, fit or function of the product. All trademarks in this material are property of Danfoss A/S or Danfoss group companies. Danfoss and the Danfoss logo are trademarks of Danfoss A/S. All rights reserved.

M00448
AQ485333770758en-000401
Danfoss Drives Oy © 2025.12

1 7 2 K 4 9 4 3 D