ENGINEERING TOMORROW

Environmental Product Information I Danfoss Drives

Disposal declaration

Frequency Converter: VACON NXP FR4
Production Place: Vaasa, Haiyan

At Danfoss, we take into account environmental considerations during the design and development of new products. We collect as much reliable data from suppliers as possible to generate lists of materials and disposal instructions.
Ways of dismantling the product depend on national and/or local legislation and the capabilities of the scrapping facilities.
This environmental information about the product is based on existing knowledge and available data.

That Danfoss facility complies with TS/IATF 16949 including ISO 9001 and ISO 14001standards.

Frequency Converters covered:

VACON® NXP FR4 208-500VAC

Danfoss A/S, DK-6430 Nordborg, Denmark, CVR nr.: 20 16 57 15, Telephone: +45 7488 2222, Fax: +45 7449 0949
Danfoss only vouches for the correctness of the English version of this declaration. In the event of the declaration being translated into any other language, the translator concerned shall be liable for the correctness of the translation.

Document ID: Disposal Declaration
File Origin Date: 2026-02-26
Revision, Sequence: A,1
File Last Modified: 2026-02-26

Classified as Business

1. PRODUCT INFORMATION BUILD UP AND IDENTIFICATION

E.q. VACON® FR typecode sticker:



The typecode of VACON® is made of standard codes and optional codes. Each part of the type code agrees to the data in the order.

The code can have this format, for example: Type: NXP00035-A2H1SSV-A1A2C30000+DNOT

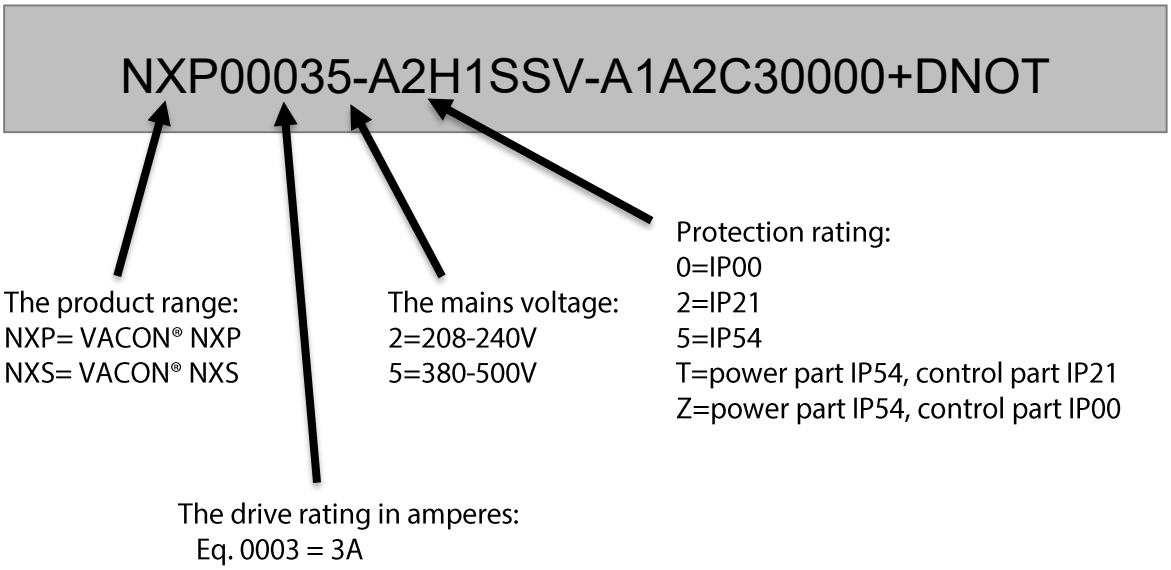

Enclosure size FR04	Nominal mains voltage	Drive rating (A)
	2 (208-240V)	0003
		0004
		0007
		0008
		0011
		0012
	5 (380-500V)	0003
		0004
		0005
		0007
		0009
		0012

Copyright © Danfoss A/S, 2026

Classified as Business

2. MAIN MATERIAL CONTENT

Type	04	VACON® FR4
	208-240V	3 kW (10% overload)
	380-500V	7.5kW (10% overload)
		
Material	**Content [g]**	**(%wt)**
Aluminum primary (Al): frame	2024	30,3
Iron/Steel primary (Fe): backplate, power module cover, choke	1899	28,5
Copper (Cu) primary: choke	265	4,0
Electronics: Printed Circuit Boards (PCB)	650	9,7
Capacitors	200	3,0
Plastics various primary (ABS+PC+TPE): control box + shield	607	9,1
Paper + Cardboard: Manual, packing	529	7,9
Packing dampers:	500	7,5
Weight of VACON® FR04 incl. package	6674	100
Number of Printed Circuit Assemblies	6	
Number of LCD's	1	

Copyright © Danfoss A/S, 2026

Classified as Business

3. DRAWINGS

3D drawing representing VACON® FR4

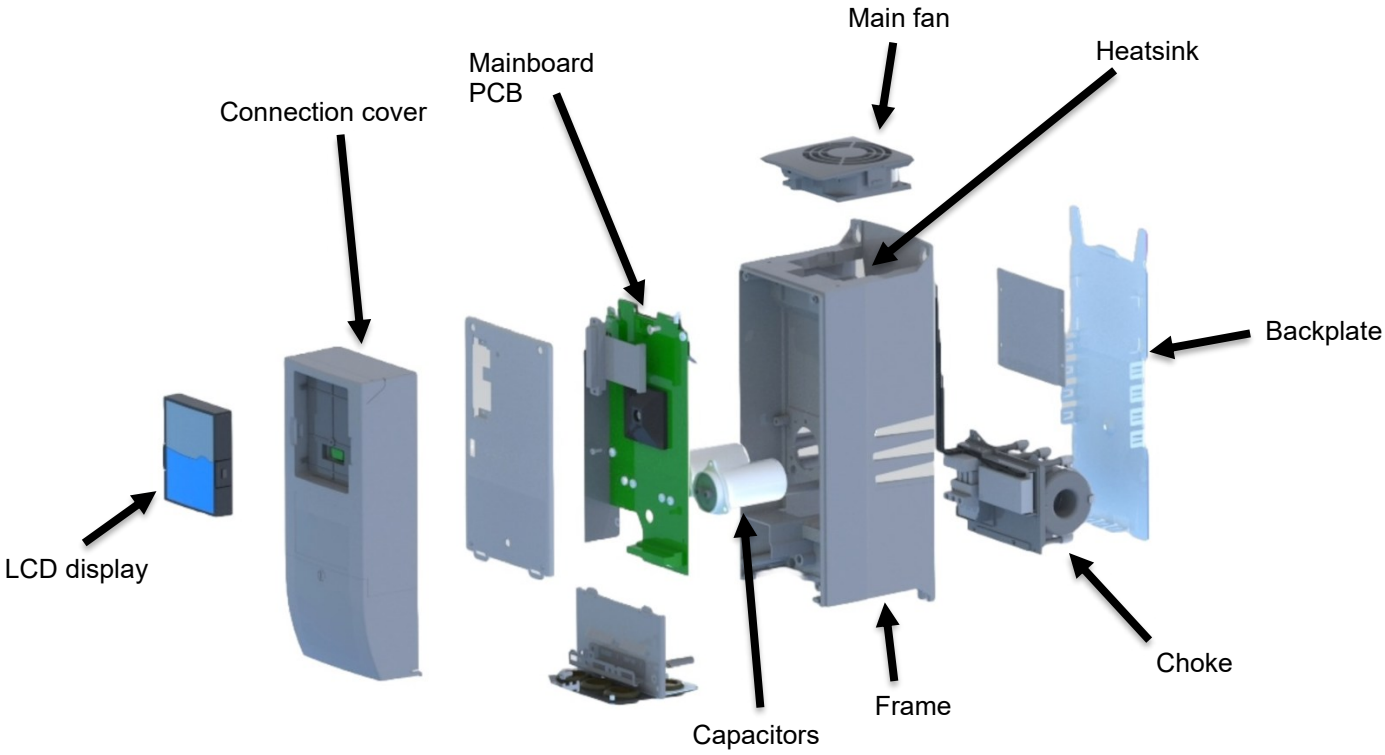

Copyright © Danfoss A/S, 2026

Classified as Business

4. PRODUCT DISPOSAL

How to Dispose the product

Many of the Drives unit's components are recyclable, reusable, and recoverable. Before that Product components and materials should be dismantled and separated.

In general, all metals, such as steel, aluminum, copper and its alloys, and precious metals can be recycled as material. Plastics, rubber, cardboard and other packaging material can be used in energy recovery.

Printed circuit boards and DC capacitors need selective treatment according to IEC 62635 guidelines.

To aid recycling, most plastic parts are marked with an appropriate identification code.

In addition, Drives product containing substances of very high concern (**SVHCs**) are listed in European Chemicals Agency's SCIP database. **SCIP** is the database for information on Substances of Concern In articles as such or in complex objects (Products) established under the Waste Framework Directive (2008/98/EC).

For further information, contact Danfoss ESG & Product Compliance Team or consult European Chemicals Agency's SCIP database to find out which SVHCs are used in the drive, and to find out where those components are located.

Dismantling

You can dismantle the drive manually or in a shredding machine.

- **Manual dismantling**
  Sort the parts of the product according to their material contents as follows:
  - ferrous metals (plates, screws)
  - aluminum (heatsink)
  - plastics
  - printed circuit boards
  - electrolytic capacitors
  - Other

You can recycle metal parts (iron and aluminum) and most of the other materials according to local regulations. For information on harmful materials, see subsection Danfoss Negative list of substances.

- **Mechanical shredding**
  In this method, a whole product is mechanically shredded into small pieces and materials are sorted using dedicated sorting processes.
  Remove the harmful material before shredding the drive in the shredding machine.
  See subsection Danfoss Negative list of substances.

Copyright © Danfoss A/S, 2026

Classified as Business

Danfoss Negative List

The Negative List is our efforts to reduce the use of harmful substances in our production and products. It is applicable worldwide and can only be replaced by stricter local legislation.

The Negative List is based on current legislation, but for selected substances, Danfoss has adopted restrictions that go beyond current legislation.

Suppliers, tenants, and contractors working on Danfoss' premises must comply with the negative list.

https://files.danfoss.com/download/CorporateCommunication/Sustainability/Danfoss-Negative-List.pdf

Recycling information in accordance with the WEEE

WEEE stands for EU Directive on waste electrical and electronic equipment. The WEEE mark shows that at the end of life the product should enter the recycling system. The product should be disposed of separately at an appropriate collection point and not be put in the normal waste stream.
The figure below shows the WEEE mark. The black bar indicates that the equipment has been manufactured after the WEEE Directive came into force in 2005.



Recycling example

This example complies with typical national regulations valid at the time of publishing this manual.

Material	Recycling method
Steel	Recycled as material
Aluminum	Recycled as material
Plastics	Energy recovery (incineration)
Printed circuit boards	Recycled as WEEE
Electrolytic capacitors	Recycled as WEEE
Cables	Recycled as material
Ceramics	Landfilled
Other materials	Energy recovery (incineration)

Copyright © Danfoss A/S, 2026

Classified as Business

EU Directives and Regulations

1. Directive 2011/65/EU of the European Parliament and of the Council of 8 June 2011 and its amendment Directive 2015/863/EU on the restriction of the use of certain hazardous substances in electrical and electronic equipment (RoHS II).
2. Regulation (EC) No 1907/2006/EC of the European Parliament and of the Council of 18 December 2006 concerning the Registration, Evaluation, Authorization and Restriction of Chemicals (REACH):
    - Annex XIV: List of substances subject to authorization
    - Annex XVII: Restrictions on use of substances in articles
    - SVHC: Candidate list of substances of very high concern for authorization.
3. Directive 2012/19/EU of the European Parliament and of the Council of 4 July 2012 on waste electrical and electronic equipment (WEEE).
4. SCIP number should be created if the component present more than 0.1% of SVHC substance list and the SCIP established under the Waste Framework Directive (2008/98/EC).
5. Danfoss complies with other country regulations and standards at national, regional, and international levels. We monitor and communicate new requirements to the organization through the Product Compliance Team. This ensures strong focus and alignment of processes and tools across our organization.

Copyright © Danfoss A/S, 2026

Classified as Business