Application guide

Danfoss Icon2™

Room control for hydronic floor heating



icon.danfoss.com

ENGINEERING
TOMORROW

Danfoss

Contents

Select your Icon2™ solution 4
Connect up to four Advanced Main Controllers wirelessly 4
Wireless thermostats. 4
2-wire 24V thermostats 4

Thermal actuators 5
New installation 5
Replacing an existing installation 5

Optional Smart Home control 5
Danfoss Ally™ 5

Fast commissioning 6

Danfoss Icon2™ Room Thermostat installer settings menu 7
How to access the installer menu 7
Explanation of dual mode 7

Danfoss Ally™ 8
Step 1-4 8
How to include Icon2 with other Zigbee-based smart home solutions 8

Application 00 9
Floor heating system

Application 01 11
2-pipe heating system with fixed supply temperature control

Application 02 13
2-pipe heating system with demand-controlled supply temperature

Application 03 15
2-pipe heating/cooling system, changeover to cooling based on supply temperature

Application 04 17
2-pipe heating/cooling system, changeover to cooling based on heat pump/external potential-free NO contact

Application 05 19
2-pipe heating/cooling system with (hybrid) heat pump, changeover to cooling based on reference thermostat

Application 06 23
3-pipe heating/cooling system with 3-way motorized ball valve, changeover to cooling based on reference thermostat

Application 07 27
3-pipe heating/cooling system with two 2-way control valves with thermal actuators, changeover to cooling based on reference thermostat

Application 08 31
3-pipe heating/cooling system with 2 ball valves with actuators, changeover to cooling based on reference thermostat

Application 09 35
4-pipe heating/cooling system with 6-way motorized ball valve, changeover to cooling based on reference thermostat

© Danfoss | Climate Solutions | 2026.09 | 2

Application 10 39
4-pipe heating/cooling system with four 2-way control valves with thermal actuators, changeover to cooling based on reference thermostat

Application 11 43
4-pipe heating/cooling system with 6-way ball valve with fixed heating and cooling supply temperature control, changeover to cooling based on reference thermostat

Application 12 47
4-pipe heating/cooling system with 6-way ball valve with demand-controlled heating supply temperature and fixed cooling supply temperature, changeover to cooling based on reference thermostat

Application 13 51
4-pipe heating/cooling system with 6-way ball valve with fixed heating and cooling supply temperature control, changeover to cooling based on reference thermostat

Application 14 55
4-pipe heating/cooling system with 6-way ball valve with demand-controlled heating supply temperature and fixed cooling supply temperature, changeover to cooling based on external (manual) potential-free NO contact

Application 15 59
2-pipe heating/cooling system with (hybrid) heat pump, changeover to cooling based on external potential-free NO contact

Application 16 63
3-pipe heating/cooling system with 3-way motorized ball valve, changeover to cooling based on external potential-free NO contact

Application 17 67
3-pipe heating/cooling system with two 2-way control valves with thermal actuators, changeover to cooling based on external potential-free NO contact

Application 18 71
3-pipe heating/cooling system with two ball valves with actuators, changeover to cooling based on external potential-free NO contact

Application 19 75
4-pipe heating/cooling system with 6-way motorized ball valve, changeover to cooling based on external potential-free NO contact

Application 20 79
4-pipe heating/cooling system with four 2-way control valves with thermal actuators, changeover to cooling based on external potential-free NO contact ‘

Troubleshooting 82
Re-pairing or replacing a device 82
When to reset the Main Controller 82
When to reset a thermostat 82
What to do if the thermostat cannot be reset 82
How to disconnect from Ally Gateway 82

UI Blinking pattern for Icon2™ Main Controller 83

Extending the wireless range 84

Guideline for wireless products 85

When to consider using a repeater? 86

Select your **Icon2™** solution & Connect **up to four** Main Controllers wirelessly

> ! Please note that Basic only support application 0 + 4



Description: Icon2™ Advanced Main Controller
Part number: 088U2110
Specifications:

Number of actuator outputs:	*15 channels*
Actuator supply voltage:	*230V thermal actuators (convertible to 24V control)*
Suitable for floor cooling:	*Yes, advanced applications for 2, 3 and 4-pipe systems*
Flow temperature control:	*Yes, depending on selected application*
Smartphone control by end user:	*Yes, with addition of optional Ally™ Gateway*
Connection to thermostats:	*Both wired and wireless; wireless communication included as standard*

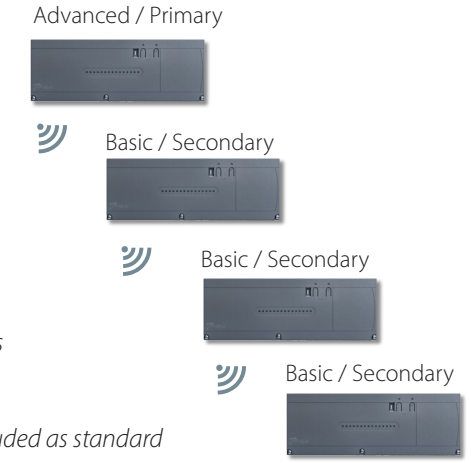

If you have an Advanced Controller with one or more Basic Controller(s), the Advanced Controller must be the Primary Controller, and the Basic Controller(s) must be the Secondary ones.

In application 0 + 4, all Controllers might be of a Basic version.

Wireless thermostats



Description:
Icon2™ RT
Display thermostat

Part number:
088U2121



Description:
Icon2™ Featured RT
Display thermostat with infrared floor sensor

Part number:
088U2122



Description:
Icon2™ Sensor
No settings or display

Part number:
088U2120

2-wire 24V thermostats



Description:
Icon2™ *On-wall thermostat*

Part number:
088U2128



Description:
Icon2™ *In-wall thermostat*

Part number:
088U2125



Description:
Optional floor sensor

Part number:
088U1110

© Danfoss | Climate Solutions | 2026.09 | 4

Thermal actuators

New installation

The Icon2™ Main Controller actuator outputs use 230V



Description:
TWA-A 230V NC thermal actuator with connection for Danfoss valves/floor heating manifolds

Part number:
088H3112



Description:
TWA-K 230V NC thermal actuator with M30 connection for valves and floor heating manifolds with M30

Part number:
088H3142

Replacing an existing **installation**

Do you need to replace existing controls that already use 24V actuators for each floor heating circuit? This optional TWA conversion module allows you to convert the 230V actuator outputs on the Icon2™ Main Controller to 24V outputs.

Description:
Icon2 TWA conversion module converts the 230V actuator outputs to 24V outputs

Part number:
088U2140

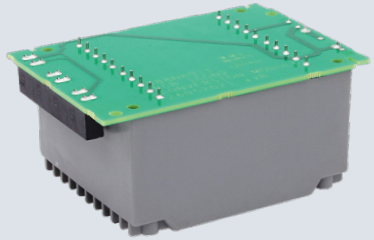

Optional **Smart Home control**

Danfoss Ally™

If the Icon2™ Main Controller is wirelessly connected to the Ally™ Gateway, the system can be controlled from inside or outside the home using an App.

Description:
Danfoss Ally™ Zigbee Gateway

Part number:
014G2400

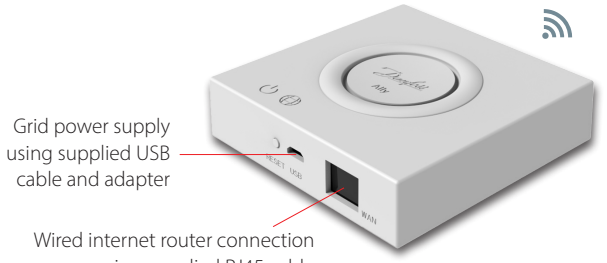



In case the Icon2 main controller is mounted in a location which will require an external antenna for ZigBee communication with the Ally Gateway, then the antenna should be connected here

Fast commissioning

Step 1:
Always be sure to connect actuators, thermostats and any accessories first

Inputs and outputs on the connected devices will instantly be detected when you insert the plug into an electrical outlet. Never connect devices with the plug already in an outlet.

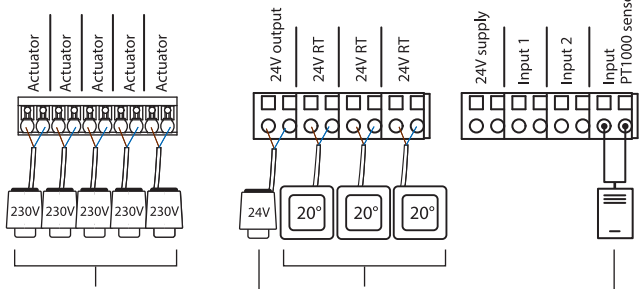

230V thermal actuators for floor heating. One actuator max. per output.

2-wire 24V thermostats. You can connect several thermostats to one bus

24V actuator and sensor for application with specific flow temperature control

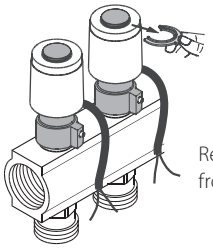

Remove the red pins from the actuators

Step 2:
Download the Icon2™ commissioning App and turn on Bluetooth on your smartphone

To set up the Icon2™ Main Controller, you will need to use the App on your smartphone or tablet. It will connect to the Icon2™ Main Controller using Bluetooth.

- Install the App on your smartphone or tablet.

Available on the App Store

Get it on Google play

Bluetooth®

- Make sure Bluetooth is turned on on your smartphone or tablet.
- Give the Danfoss App permission to access Bluetooth.

Optional:
Linking of thermostats to actuator outputs without the Icon2 commissing App

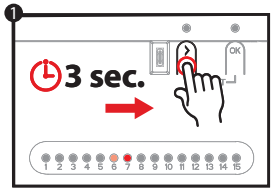

- Press > until the LED starts flashing green. Every actuator output connected to an actuator will light up.

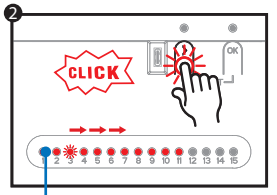

- Use > to select the actuator output you want to pair with the thermostat and confirm with OK. The LED for the selected output will light up dimly.

Repeat for each actuator output you want to pair with the thermostat.

Repeat steps 2 and 3 for each thermostat

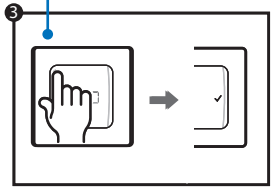

- Once you have selected all the actuator outputs, activate the thermostat by pressing the ↩ on the thermostat. When the ✓ lights up, this means the thermostat is now linked to the selected actuator outputs.

Once each actuator output has been assigned to a thermostat, you will exit installer mode automatically

© Danfoss | Climate Solutions | 2026.09 | 6

Danfoss Icon2™ Room Thermostat **installer settings menu**

Access the **user and installer menu**

Activate the thermostat. Press and hold ↩ to open the basic menu (ME. 1 to 3).
Then press and hold ↩ *again* to access the ***installer menu ME. 4 to 7.***

Use ∧ or ∨ to change menus and ✓ to confirm. Press ↩ to go back one step in the menu.

⚠ The ME.4 and ME.5 menu settings will only be available if the thermostat has a floor sensor. Menu settings ME.6 and ME.7 will only be available if a cooling application was selected.

ME. 1 : Set limits for room temperature setpoint adjustments

ME. 2 : Information/version number used to identify the product

ME. 3 : Perform a link test to test the connection with the Main Controller.
Test results are 0–100%, with 30% or higher indicating a strong signal strength.

ME. 4 : Floor sensor mode:
CO = Comfort mode. Uses both air and floor sensors.
FL = Floor sensor mode, only floor sensor will be used to measure the temperature.
DU = Dual mode. Thermostat controls one or more radiators and one or more floor heating circuits.
Note: Minimum 2 outputs have to be assigned to the thermostat in order for Dual mode to be available.

ME. 5 : Minimum and maximum floor temperatures for use with CO and DU modes.

ME. 6 : Reference room. Set to **ON** to use this room's thermostat as the reference for the changeover between cooling and heating modes.

ME. 7 : Cooling **ON/OFF**. This setting is used to disable cooling, for example in a bathroom.

Additional cooling options is available in the Icon2 App.

Explanation of dual mode

In rooms with a combination of floor heating and radiators or convectors, one thermostat can be used to control both individually.

For this to be possible, the wireless or wired thermostat must have a floor sensor. On the Main Controller, the actuator outputs for the floor heating must be configured to SLOW and those for the convectors to FAST. Floor heating circuits will maintain a comfortable surface temperature based on the min. floor temp. setting (ME. 5) and the radiator(s) maintain requested room temperature.

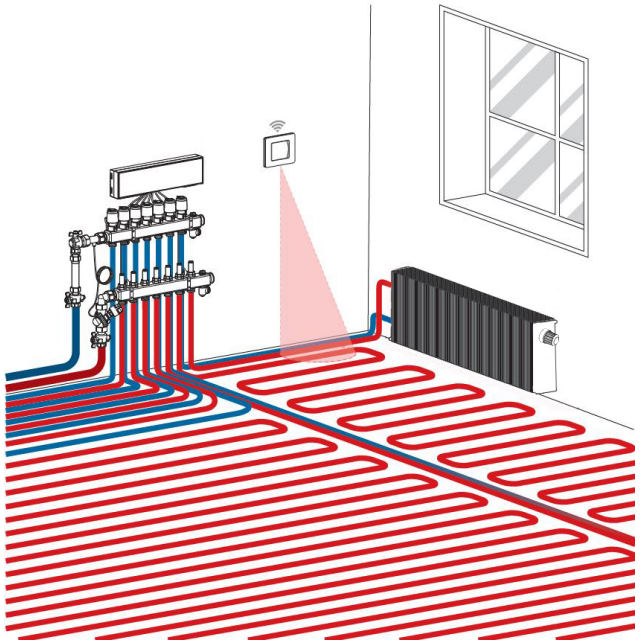

© Danfoss | Climate Solutions | 2026.09 | 7

Danfoss Ally setup

Step 1:

Download the Danfoss Ally™ App and create your account



Step 2:

Connect mains power and Ethernet cables to your Danfoss Ally™ Gateway and follow the installation process in the App.
Make sure your mobile device is connected to Wi-Fi from the same router as the Gateway is connected to with cable.

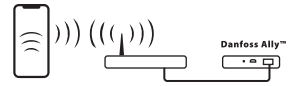

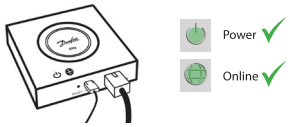

Step 3:

1. Launch Danfoss Ally™ App and add your Danfoss Ally™ Gateway.
2. Select Danfoss Ally™ Gateway and add subdevices to your Danfoss Ally™ Smart heating system.



Step 4:

After installation process is done, open the App and set up your heating system with schedule and temperature. For the full information please visit the web address ally.danfoss.com



How to **include** Icon2 with other **Zigbee-based smart home solutions**

Most users will prefer to have one App to control their smart home.

By including the Icon2 in the system, the user will be able to control the Icon2 system via the same App that controls the rest of the house. Icon2 is connected to Zigbee-based smart home solutions by opening up the App of the Zigbee smart home solution of your choice and adding the Icon2 system as a new device. Depending on the smart home solution, this can either be done by simply pressing the OK button once or, in the case of a Zigbee 3.0 solution, first scanning the QR code in the lower left corner on the MC front and then clicking the OK button to finalize the inclusion process.

Note: Not all Icon2 features will be available as standard in all smart home solutions.

Application **00**

Floor heating system

Aapplication description

This basic Icon2™ application controls thermal actuators by group based on heating demand for the linked room thermostats.

The pump and heat demand signal will activate whenever there is a heating demand for at least one circuit. Both the pump (PWR1) and the heat demand signal (RELAY) are set to have a switch-on delay of 3 minutes by default.

In PWM+ mode, the Danfoss Icon2™ makes use of automatic balancing. During periods with a greater need for heat, this decreases the time spent 'on' for shorter pipes in small rooms and prioritizes longer pipes in large rooms within the system. The process is automatic and continuous. It ensures more efficient energy consumption and greater comfort.

Installer App settings

Function	Factory setting	
	Off	On
PWM+ proportional control of actuator outputs		•
Heat pump optimizer – maintenance of minimum flow	•	
PWR1 switch-on delay of 3 minutes		•
RELAY switch-on delay of 3 minutes		•
IN2 input for changeover to cooling*	•	

** If you enable IN2, the system will function according to Application 04*

Required accessories

1	Stainless steel floor heating manifold SSM-F, 2–12 groups	088U0752 to 088U0762
	Set of 2 mounting brackets	088U0585
	Set of 2 ball valves 1"	088U0822
2	Thermal actuator TWA-A 230V NC suitable for SSM-F manifold	088H3112
3	Dew point sensor CF-DS	088U0251
4	External NO contact for changeover to cooling mode	External

App 00

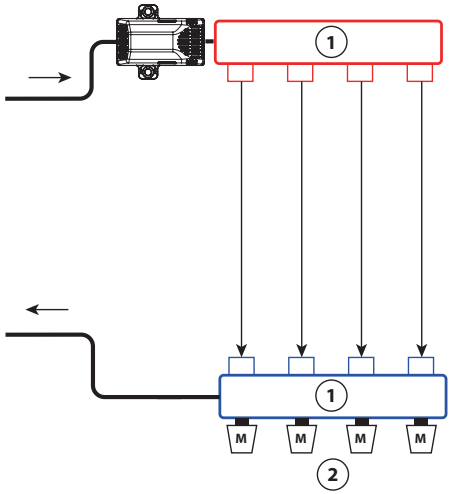

1 1 set Danfoss Manifold
(types FHF or BasicPlus or SSM)

2 Thermal actuators, 230V / *24V** TWA-A
** Requires TWA conversion module*

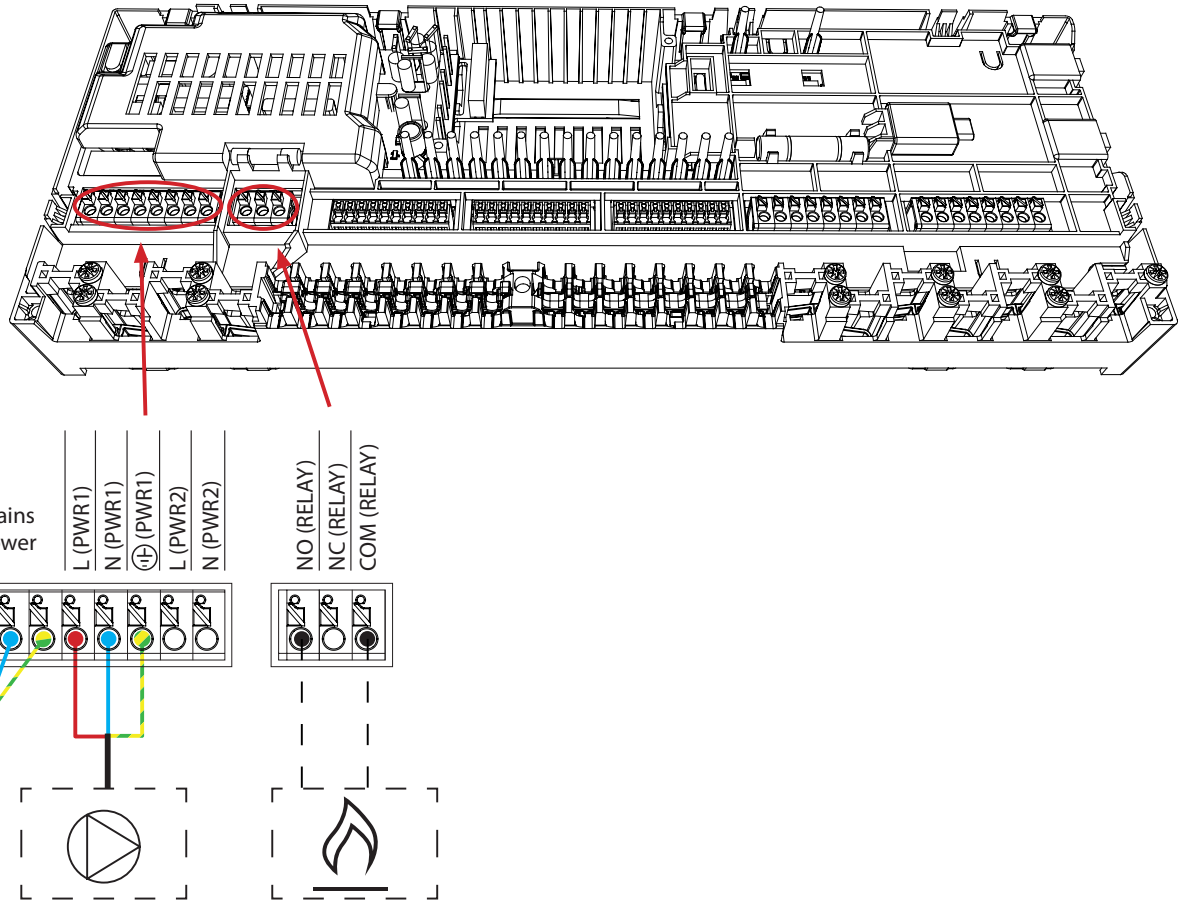

Danfoss
88U17.02

© Danfoss | Climate Solutions | 2026.09 | 10

Application **01**

2-pipe heating system with fixed supply temperature control

Requires an Advanced Main Controller

Application description
Floor heating system with electronically controlled supply temperature.
The supply temperature is set to a fixed value. The system uses a PT1000 sensor to detect and control the supply temperature. This sensor also ensures that the maximum allowable supply temperature is not exceeded.

The pump and heat demand signal will activate whenever there is a heating demand for at least one circuit. Both the pump (PWR1) and the heat demand signal (RELAY) are set to have a switch-on delay of 3 minutes by default.

In PWM+ mode, the Danfoss Icon2™ makes use of automatic balancing. During periods with a greater need for heat, this decreases the time spent 'on' for shorter pipes in small rooms and prioritizes longer pipes in large rooms within the system. The process is automatic and continuous. It ensures more efficient energy consumption and greater comfort.

Installer App settings

Function	Factory setting	
	Off	On
PWM+ proportional control of actuator outputs		•
Heat pump optimizer – maintenance of minimum flow	•	
PWR1 switch-on delay of 3 minutes		•
RELAY switch-on delay of 3 minutes		•
Safety temperature	50.0 °C	
Desired supply temperature	40.0 °C	

Required accessories

1	Mixing shunt FHM-C1 with circulation pump UPM3 15-70	088U0094
2	Stainless steel floor heating manifold SSM-F, 2–12 groups	088U0752 to 088U0762
	Set of 2 mounting brackets	088U0585
	Set of 2 ball valves 1"	088U0822
3	Thermal actuator TWA-A 230V NC suitable for SSM-F manifold	088H3112
4	PT1000 temperature sensor ESM-11	087B1165
5	Thermal actuator TWA-A 24V NC suitable for mixing shunt FHM-C1	088H3110

© Danfoss | Climate Solutions | 2026.09 | 11

App 1

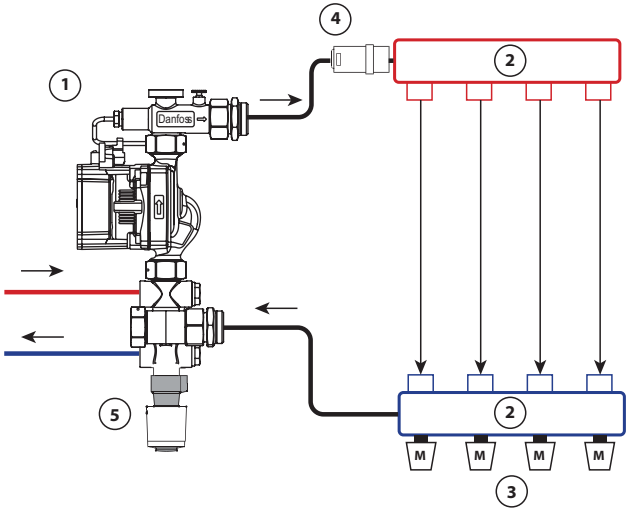

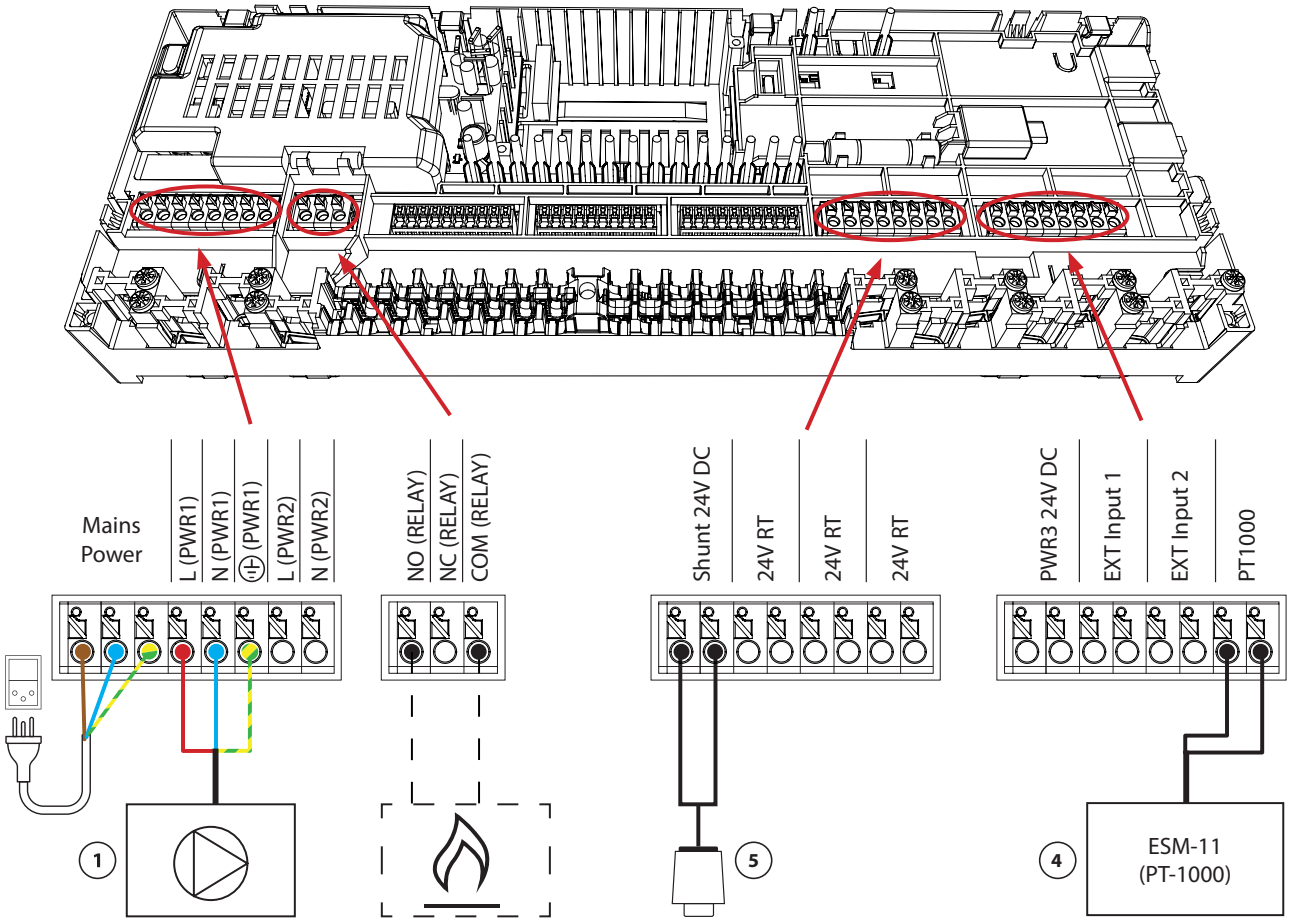

1. Circulation pump
2. 1 set Danfoss Manifold (types FHF or BasicPlus or SSM)
3. Thermal actuators, 230V / *24V** TWA-A
   ** Requires TWA conversion module*
4. ESM-11 (PT-1000)
5. Thermal actuator 24V TWA-A

Danfoss
88U0950

© Danfoss | Climate Solutions | 2026.09 | 12

Application **02**

2-pipe heating system with demand-controlled supply temperature

Requires an Advanced Main Controller

Application description
Floor heating system with electronically controlled supply temperature. An optimum supply temperature is determined based on the rooms' need for heat.

The system uses a PT1000 sensor to detect the supply temperature. This sensor also ensures that the temperature does not exceed the maximum allowable temperature set as the safety temperature. If this sensor is connected, the system will control the circulation pump and heat demand signal for a boiler or heat pump, for example.

The pump and heat demand signal will activate whenever there is a heating demand for at least one circuit. Both the pump (PWR1) and the heat demand signal (RELAY) are set to have a switch-on delay of 3 minutes by default.

In this application, the Danfoss Icon2™ makes use of automatic balancing. During periods with a greater need for heat, this decreases the time spent 'on' for shorter pipes in small rooms and prioritizes longer pipes in large rooms within the system.
The process is automatic and continuous. It ensures more efficient energy consumption and greater comfort.

Installer App settings

Function	Factory setting	
	Off	On
PWM+ proportional control of actuator outputs*		•
Heat pump optimizer – maintenance of minimum flow	•	
PWR1 switch-on delay of 3 minutes		•
RELAY switch-on delay of 3 minutes		•
Temperature range	25.0–40.0 °C	
Safety temperature	50.0 °C	

**Non-adjustable*

Required accessories

1	Mixing shunt FHM-C1 with circulation pump UPM3 15-70	088U0094
2	Stainless steel floor heating manifold SSM-F, 2–12 groups	088U0752 to 088U0762
	Set of 2 mounting brackets	088U0585
	Set of 2 ball valves 1"	088U0822
3	Thermal actuator TWA-A 230V NC suitable for SSM-F manifold	088H3112
4	PT1000 temperature sensor ESM-11	087B1165
5	Thermal actuator TWA-A 24V NC suitable for mixing shunt FHM-C1	088H3110

© Danfoss | Climate Solutions | 2026.09 | 13

App 2

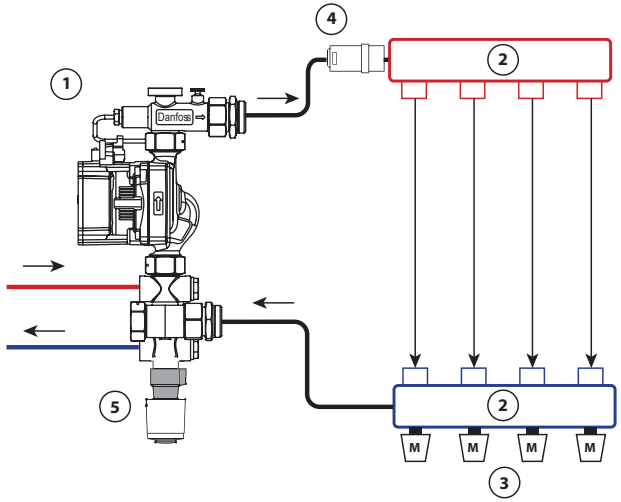

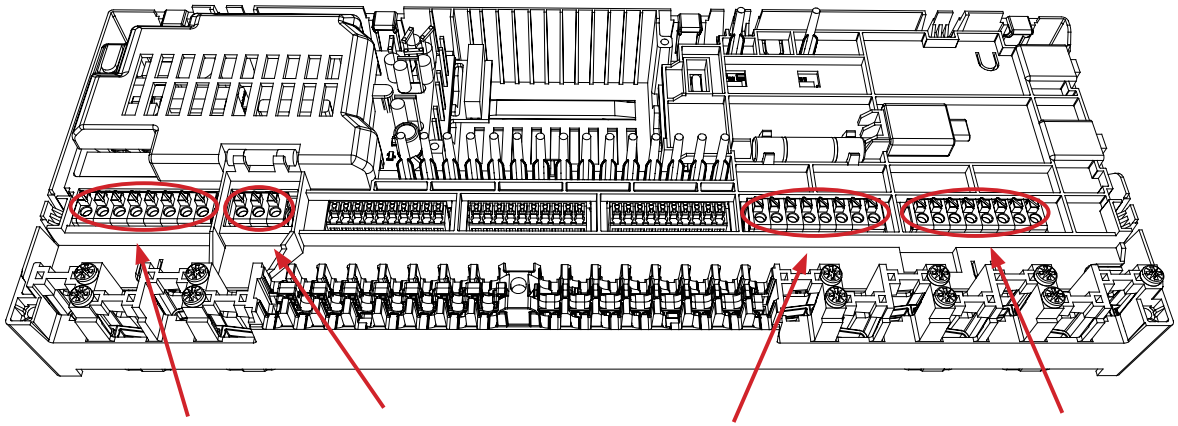

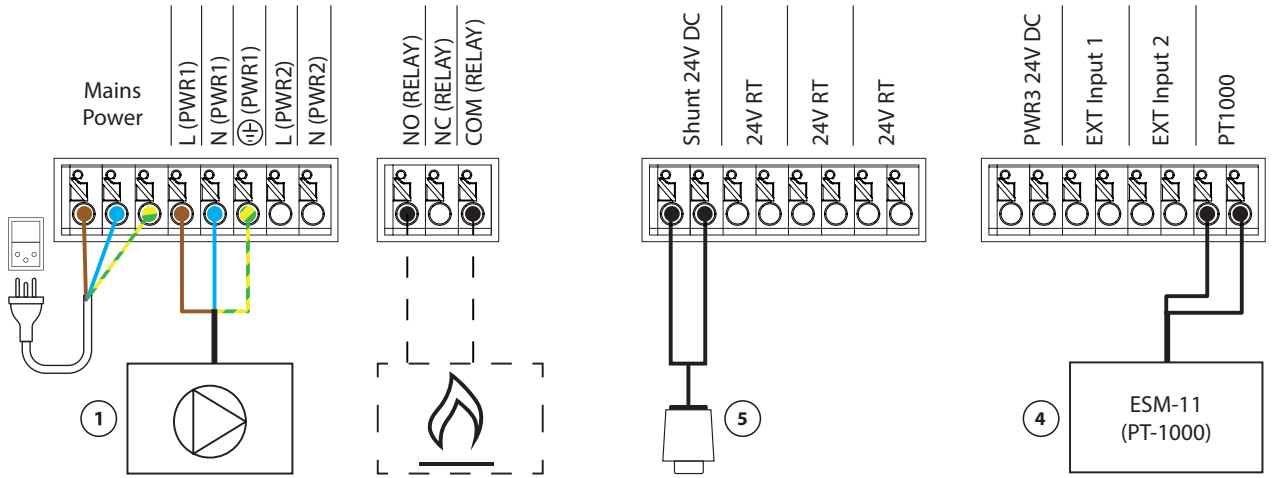

1. Circulation pump
2. 1 set Danfoss Manifold (types FHF or BasicPlus or SSM)
3. Thermal actuators, 230V / *24V** TWA-A
   ** Requires TWA conversion module*
4. ESM-11 (PT-1000)
5. Thermal actuator 24V TWA-A

Danfoss
88U0951

© Danfoss | Climate Solutions | 2026.09 | 14

Application **03**

2-pipe heating/cooling system, changeover to cooling based on supply temperature

Requires an Advanced Main Controller

Application description

Floor heating system with automatic changeover to cooling based on supply temperature input. A PT1000 sensor is used to monitor the supply temperature. The system will change over to heating or cooling based on this measurement. If the sensor is connected, the system will control the circulation pump, activating it if there is a need for heat or cooling in at least one room. The PT1000 sensor must be mounted to a pipe where flow will be assured at all times.

The heating signal for e.g. a boiler or heat pump will only be activated if the system is in heating mode and there is a heating demand in at least one room.

If it is not possible to prevent the supply temperature from dropping below the dew point in cooling mode, it is strongly recommended that you add a dew point sensor. Condensation can result in permanent damage to the floor's construction and finish.

Explanation of heating and cooling for end user

Cooling ❄ only starts when the main controller switches to cooling mode via the external supply temperature sensor and a hysteresis of 2 K above the thermostat's set temperature has been exceeded.

For example, if the thermostat is set to 22 °C, cooling will not start until the room temperature exceeds 24 °C.

The room temperature is never cooled to more than 2 °C above the set temperature. For example, if the temperature is set to 21 °C, the room will be cooled to 23 °C.

Heating))) is only activated again when the measured supply temperature returns to the heating temperature range.

Installer App settings

Function	Factory setting	
	Off	On
PWM+ proportional control of actuator outputs		•
Heat pump optimizer – maintenance of minimum flow	•	
PWR1 switch-on delay of 3 minutes		•
RELAY switch-on delay of 3 minutes		•
Change water temperature to heating	25.0 °C	
Change water temperature to cooling	19.0 °C	

Required accessories

1	Dew point sensor CF-DS	088U0251
2	Stainless steel floor heating manifold SSM-F, 2–12 groups	088U0752 to 088U0762
	Set of 2 mounting brackets	088U0585
	Set of 2 ball valves 1"	088U0822
3	Thermal actuator TWA-A 230V NC suitable for SSM-F manifold	088H3112
4	PT1000 temperature sensor ESM-11	087B1165

© Danfoss | Climate Solutions | 2026.09 | 15

App 3

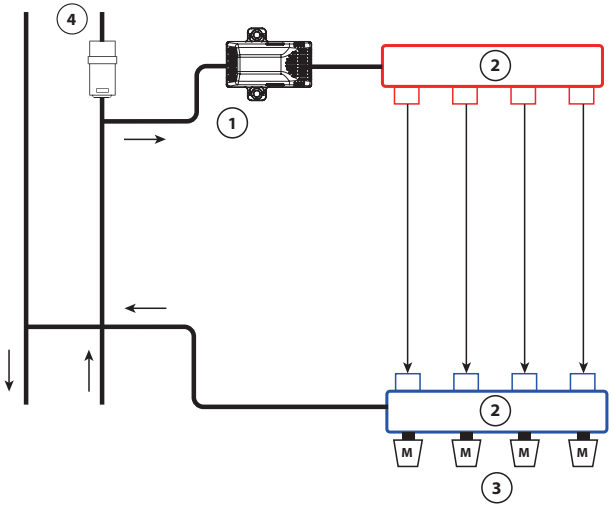

1. Dew Point Sensor CF-DS
2. 1 set Danfoss Manifold (types FHF or BasicPlus or SSM)
3. Thermal actuators, 230V / *24V** TWA-A
   ** Requires TWA conversion module*
4. ESM-11 (PT-1000)

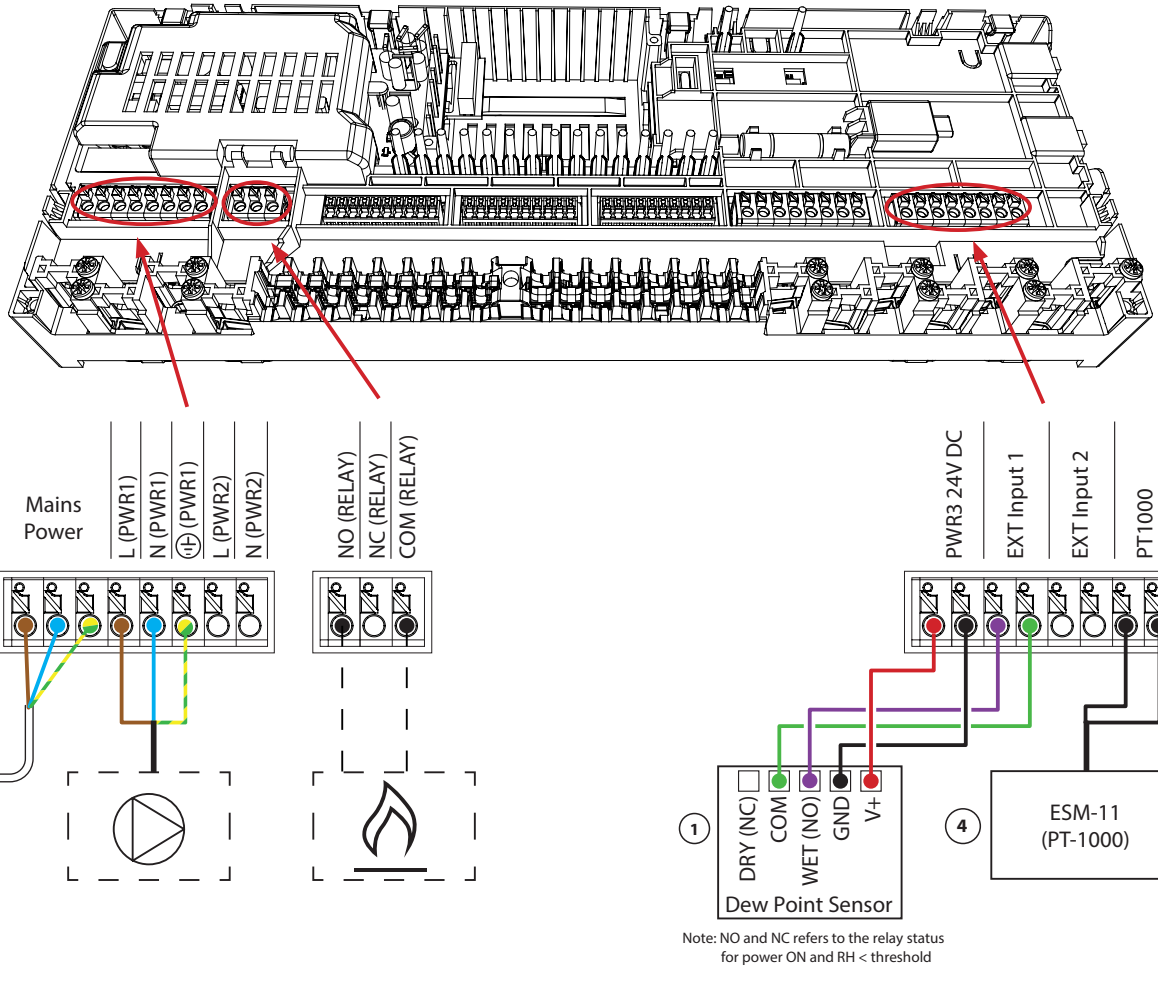

© Danfoss | Climate Solutions | 2026.09 | 16

Application **04**

2-pipe heating/cooling system, changeover to cooling based on heat pump/external potential-free NO contact

Application description

Floor heating system with automatic changeover to cooling mode, controlled by a heat pump or other heating and cooling source. The heat pump signals the Danfoss Icon™ Main Controller to start cooling using a potential-free NO contact connected to IN2.

The PWR1 circulation pump will activate whenever there is at least one room with a heating or cooling demand. The RELAY (heat source control) will activate whenever there is at least one room with a heating demand.

If it is not possible to prevent the supply temperature from dropping below the dew point in cooling mode, it is strongly recommended that you add a dew point sensor. Condensation can result in permanent damage to the floor's construction and finish.

If dew point monitoring is active, the pump and all actuator outputs will be inactive.

Explanation of heating and cooling for end user

Cooling ❄ only starts when the main controller is switched to cooling mode via EXT Input 2 and a hysteresis of 2 K above the thermostat's set temperature has been exceeded.

For example, if the thermostat is set to 22 °C, cooling will not start until the room temperature exceeds 24 °C.

The room temperature is never cooled to more than 2 °C above the set temperature. For example, if the temperature is set to 21 °C, the room will be cooled to 23 °C.

Heating))) is only activated again when EXT Input 2 is opened again.

Installer App settings

Function	Factory setting	
	Off	On
PWM+ proportional control of actuator outputs		•
Heat pump optimizer – maintenance of minimum flow	•	
PWR1 switch-on delay of 3 minutes		•
RELAY switch-on delay of 3 minutes		•
IN2 input for changeover to cooling		•

Required accessories

1	Heat pump or hybrid system	External supplier
2	Stainless steel floor heating manifold SSM-F, 2–12 groups	088U0752 to 088U0762
	Set of 2 mounting brackets	088U0585
	Set of 2 ball valves 1"	088U0822
3	Thermal actuator TWA-A 230V NC suitable for SSM-F manifold	088H3112
4	Dew point sensor CF-DS	088U0251
5	External NO contact for changeover to cooling mode	External

© Danfoss | Climate Solutions | 2026.09 | 17

App 4

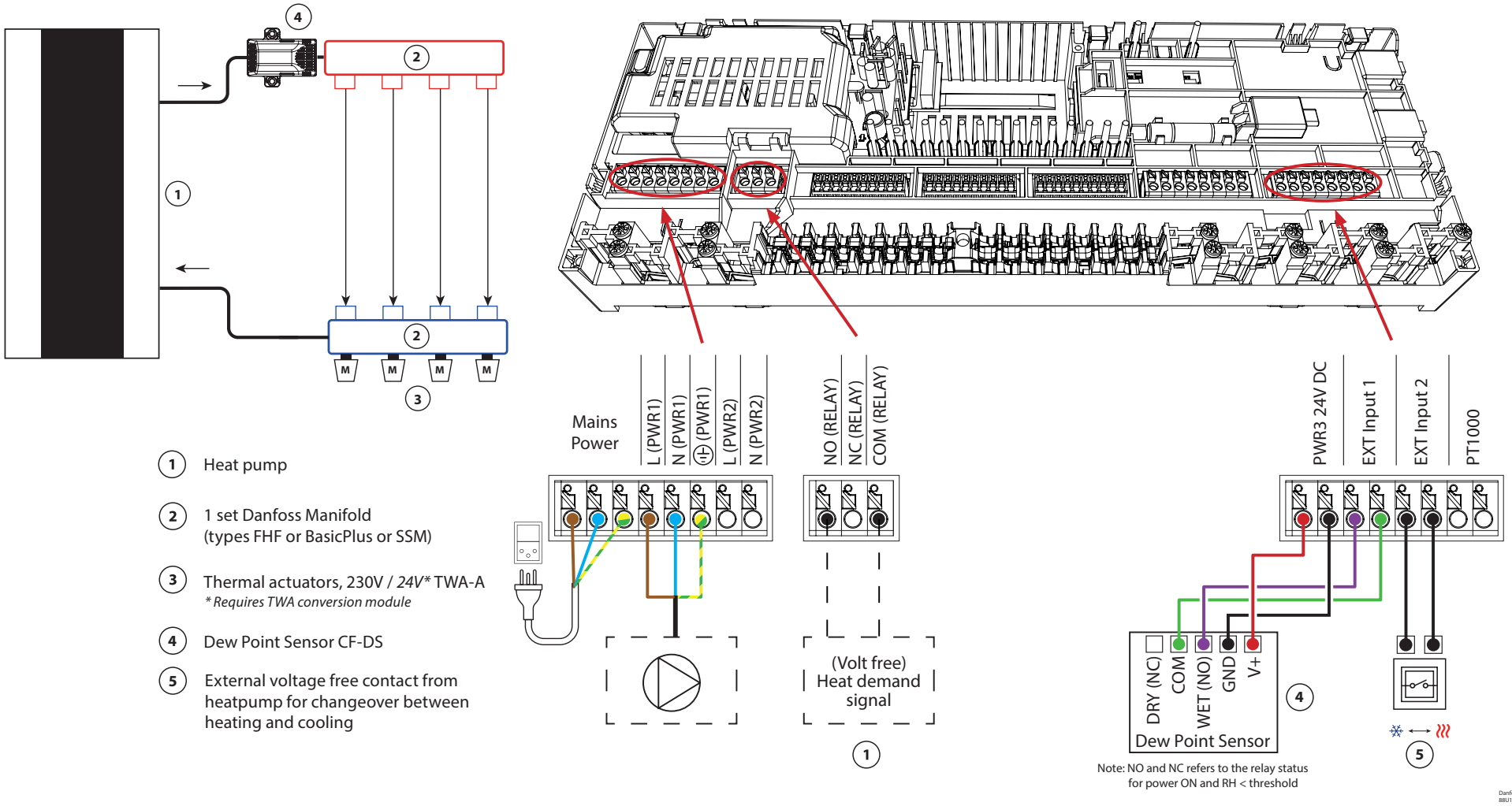

1. Heat pump
2. 1 set Danfoss Manifold (types FHF or BasicPlus or SSM)
3. Thermal actuators, 230V / *24V** TWA-A
   ** Requires TWA conversion module*
4. Dew Point Sensor CF-DS
5. External voltage free contact from heatpump for changeover between heating and cooling

Application **05**

2-pipe heating/cooling system with (hybrid) heat pump, changeover to cooling based on reference thermostat

Requires an Advanced Main Controller

Application description
This application makes it possible to send separate control signals for both heating and cooling demands to a heat pump or hybrid system. The PWR1 (230V output) is active when there is a heating demand and the RELAY (potential-free contact) is used for cooling.
To enable the PWR1 230V output to control the heat pump based on heating demand, the AMZ connection box converts the signal to a potential-free NO contact.

If it is not possible to prevent the supply temperature from dropping below the dew point in cooling mode, it is strongly recommended that you add a dew point sensor. Condensation can result in permanent damage to the floor's construction and finish.

The changeover between heating and cooling is controlled based on a reference thermostat. In nearly all cases, the living room is used as the reference.

To prevent excessive switching between heating and cooling modes, the following conditions must be met for the system to change over to cooling mode:
- The room temperature measured by the reference thermostat must exceed the set room temperature + dead band (adjustable from 0–4K).
- The reference thermostat did not have a heating demand during the time delay (adjustable from 0–24 hours).
- If present, dew point monitoring must be inactive
- The room thermostat must have cooling enabled (default = enabled).

Setting one thermostat as the reference thermostat
In this application, one thermostat is set up as a reference thermostat. The temperature in this room determines whether the system is in heating or cooling mode.

There are two ways to set up a reference thermostat:
1. Using the Installer App on a smartphone
2. Using the installer menu on the thermostat itself
   To do so, set the **ME.6** setting to **ON**

Disabling cooling (Bathroom)
If there is a bathroom with underfloor heating and an Icon2™ room thermostat, you may want to disable cooling for this room. Cooling a bathroom will cause condensation to form on the floor.

There are two ways to disable cooling mode for a room:
1. Using the Installer App on a smartphone
2. Using the installer menu on the thermostat itself
   To do so, set the **ME.7** setting to **OFF**

© Danfoss | Climate Solutions | 2026.09 | 19

App 5

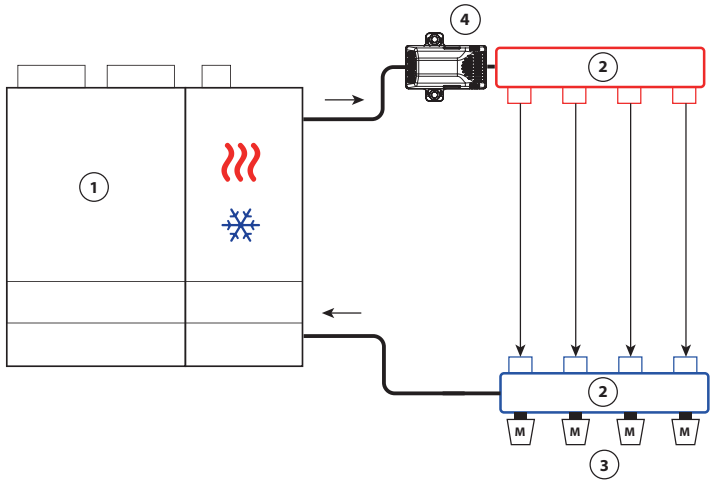

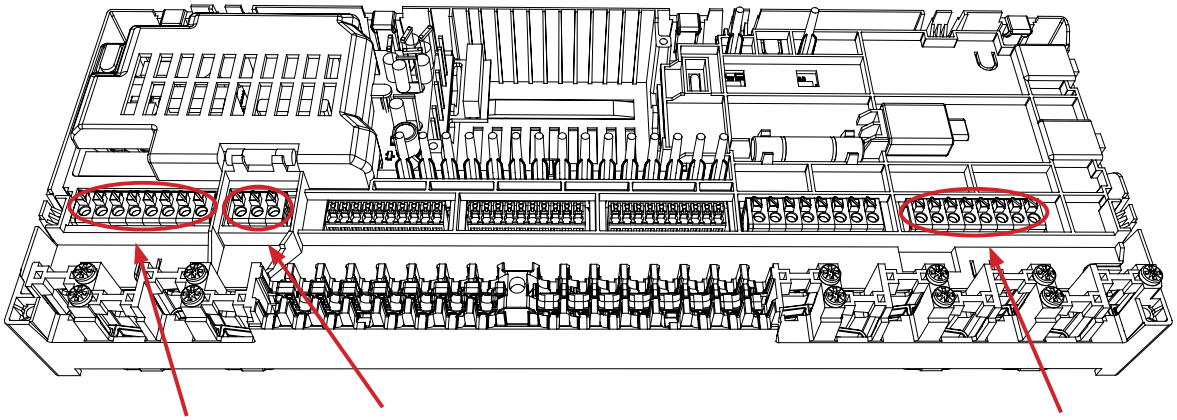

Reference Thermostat

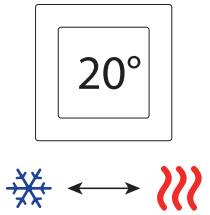

1. Hybrid gas / Heat pump
2. 1 set Danfoss Manifold (types FHF or BasicPlus or SSM)
3. Thermal actuators, 230V / *24V** TWA-A
   ** Requires TWA conversion module*
4. Dew Point Sensor CF-DS
5. External relay

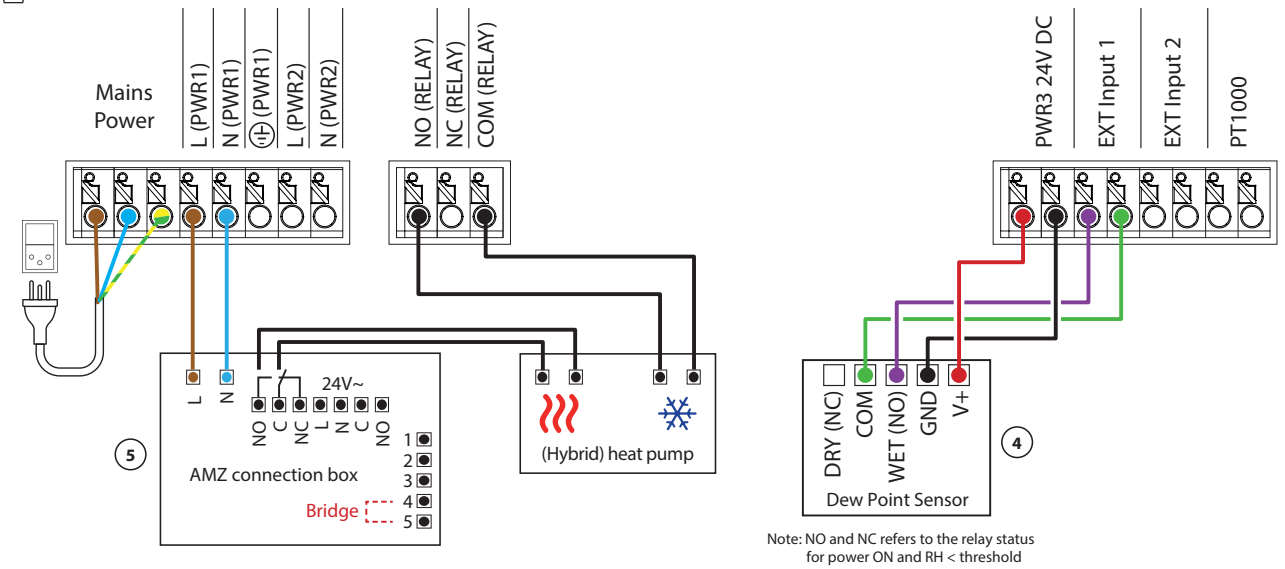

Application **05** *Continued*

Explanation of heating and cooling for end user

No cooling will occur ❄ until the reference room temperature has exceeded the set temperature + dead band for the set time delay. For example, after the room's temperature has been over 25 °C (21 °C + 4K) for six hours.

A room will never be cooled further than two degrees above the set temperature. If the temperature is set to 21 °C, for example, the room will be cooled to 23 °C. Heating))) will activate as soon as the room temperature drops below the set temperature.

Installer App settings

Function	Factory setting	
	Off	On
PWM+ proportional control of actuator outputs		•
Heat pump optimizer – maintenance of minimum flow	•	
Dead band heating/cooling changeover	4K	
Time delay for changeover to cooling mode	6h	

Required accessories

1	Heat pump or hybrid system	External supplier
2	Stainless steel floor heating manifold SSM-F, 2–12 groups	088U0752 to 088U0762
	Set of 2 mounting brackets	088U0585
	Set of 2 ball valves 1"	088U0822
3	Thermal actuator TWA-A 230V NC suitable for SSM-F manifold	088H3112
4	Dew point sensor CF-DS	088U0251
5	External relay - AMZ connection box	082G1636

© Danfoss | Climate Solutions | 2026.09 | 21

Notes

Drawings

© Danfoss | Climate Solutions | 2026.09 | 22

Application **06**

3-pipe heating/cooling system with 3-way motorized ball valve, changeover to cooling based on reference thermostat

Requires an Advanced Main Controller

Application description
In this application, a 230V 3-way motorized ball valve is used to change over between heating and cooling modes.

The PWR1 230V output activates when the system is in cooling mode.
If it is not possible to prevent the supply temperature from dropping below the dew point in cooling mode, it is strongly recommended that you add a dew point sensor. Condensation can result in permanent damage to the floor's construction and finish.

The changeover between heating and cooling is controlled based on a reference thermostat. In nearly all cases, the living room is used as the reference.

To prevent excessive switching between heating and cooling modes, the following conditions must be met for the system to change over to cooling mode:
- The room temperature measured by the reference thermostat must exceed the set room temperature + dead band (adjustable from 0–4K).
- The reference thermostat did not have a heating demand during the time delay (adjustable from 0–24 hours).
- If present, dew point monitoring must be inactive
- The room thermostat must have cooling enabled (default = enabled).

Setting one thermostat as the reference thermostat
In this application, one thermostat is set up as a reference thermostat.
The temperature in this room determines whether the system is in heating or cooling mode.

There are two ways to set up a reference thermostat:
1. Using the Installer App on a smartphone
2. Using the installer menu on the thermostat itself
   To do so, set the **ME.6** setting to **ON**

Disabling cooling (Bathroom)
If there is a bathroom with underfloor heating and an Icon2™ room thermostat, you may want to disable cooling for this room. Cooling a bathroom will cause condensation to form on the floor.

There are two ways to disable cooling mode for a room:
1. Using the Installer App on a smartphone
2. Using the installer menu on the thermostat itself
   To do so, set the **ME.7** setting to **OFF**

© Danfoss | Climate Solutions | 2026.09 | 23

App 6

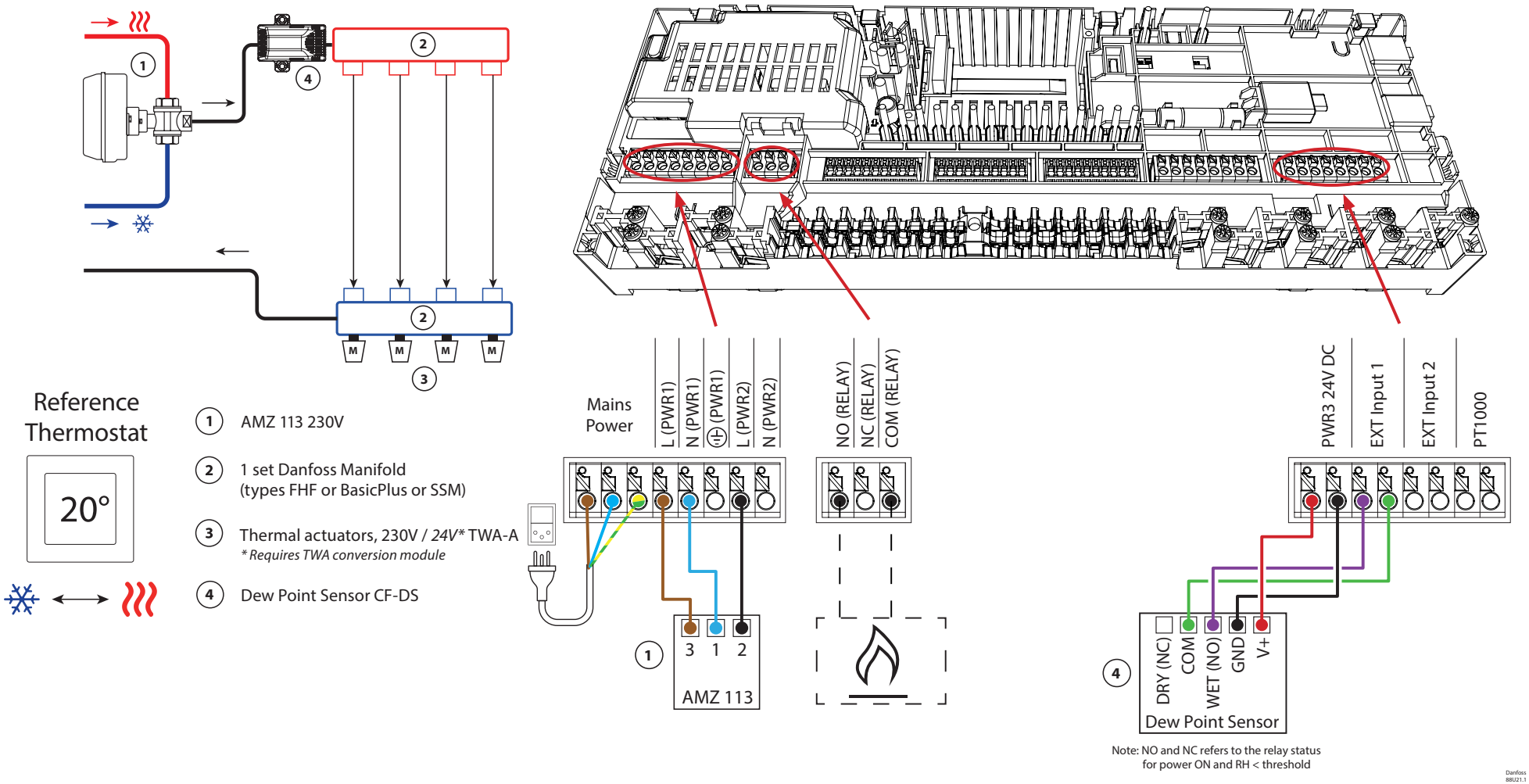
Reference Thermostat
20°
1 AMZ 113 230V
2 1 set Danfoss Manifold (types FHF or BasicPlus or SSM)
3 Thermal actuators, 230V / *24V** TWA-A
** Requires TWA conversion module*
4 Dew Point Sensor CF-DS
Mains Power
L (PWR1)
N (PWR1)
⏚ (PWR1)
L (PWR2)
N (PWR2)
NO (RELAY)
NC (RELAY)
COM (RELAY)
PWR3 24V DC
EXT Input 1
EXT Input 2
PT1000
3 1 2
AMZ 113
DRY (NC)
COM
WET (NO)
GND
V+
Dew Point Sensor
Note: NO and NC refers to the relay status for power ON and RH < threshold

Application **06** *Continued*

Explanation of heating and cooling for end user

No cooling will occur ❄ until the reference room's temperature has exceeded the set temperature + set dead band for longer than the set time delay. For example, after the room's temperature has been over 25 °C (21 °C + 4K) for six hours.

The room's temperature will never be cooled further than two degrees above the set temperature. If the temperature is set to 21 °C, for example, the room will be cooled to 23 °C. Heating))) will activate as soon as the room temperature drops below the set temperature.

Installer App settings

Function	Factory setting	
	Off	On
PWM+ proportional control of actuator outputs		•
Heat pump optimizer – maintenance of minimum flow	•	
Dead band heating/cooling changeover	4K	
Time delay for changeover to cooling mode	6h	

Required accessories

1	3-way motorized ball valve 230V AMZ 113 DN20	082G5419
2	Stainless steel floor heating manifold SSM-F, 2–12 groups	088U0752 to 088U0762
	Set of 2 mounting brackets	088U0585
	Set of 2 ball valves 1"	088U0822
3	Thermal actuator TWA-A 230V NC suitable for SSM-F manifold	088H3112
4	Dew point sensor CF-DS	088U0251

© Danfoss | Climate Solutions | 2026.09 | 25

Notes

Drawings

© Danfoss | Climate Solutions | 2026.09 | 26

Application **07**

3-pipe heating/cooling system with two 2-way control valves with thermal actuators, changeover to cooling based on reference thermostat

Requires an Advanced Main Controller

Application description
In this application, two 2-way motorized control valves are used to change over between heating and cooling modes. The thermal actuator on the 2-way cooling control valve will stay open as long as the system is in cooling mode. The thermal actuator for heating will stay open as long as the system is in heating mode.

Optionally, you can use the 230V pump control PWR1 and RELAY heat source control.

If it is not possible to prevent the supply temperature from dropping below the dew point in cooling mode, it is strongly recommended that you add a dew point sensor. Condensation can result in permanent damage to the floor's construction and finish.

The changeover between heating and cooling is controlled based on a reference thermostat. In nearly all cases, the living room is used as the reference.

To prevent excessive switching between heating and cooling modes, the following conditions must be met for the system to change over to cooling mode:
- The room temperature measured by the reference thermostat must exceed the set room temperature + dead band (adjustable from 0–4K).
- The reference thermostat did not have a heating demand during the time delay (adjustable from 0–24 hours).
- If present, dew point monitoring must be inactive
- The room thermostat must have cooling enabled (default = enabled).

Setting one thermostat as the reference thermostat
In this application, one thermostat is set up as a reference thermostat.
The temperature in this room determines whether the system is in heating or cooling mode.

There are two ways to set up a reference thermostat:
1. Using the Installer App on a smartphone
2. Using the Installer menu on the thermostat itself

To do so, set the **ME.6** setting to **ON**

Disabling cooling (Bathroom)
If there is a bathroom with underfloor heating and an Icon2™ room thermostat, you may want to disable cooling for this room. Cooling a bathroom will cause condensation to form on the floor.

There are two ways to disable cooling mode for a room:
1. Using the Installer App on a smartphone
2. Using the Installer menu on the thermostat itself
   To do so, set the **ME.7** setting to **OFF**

© Danfoss | Climate Solutions | 2026.09 | 27

App 7

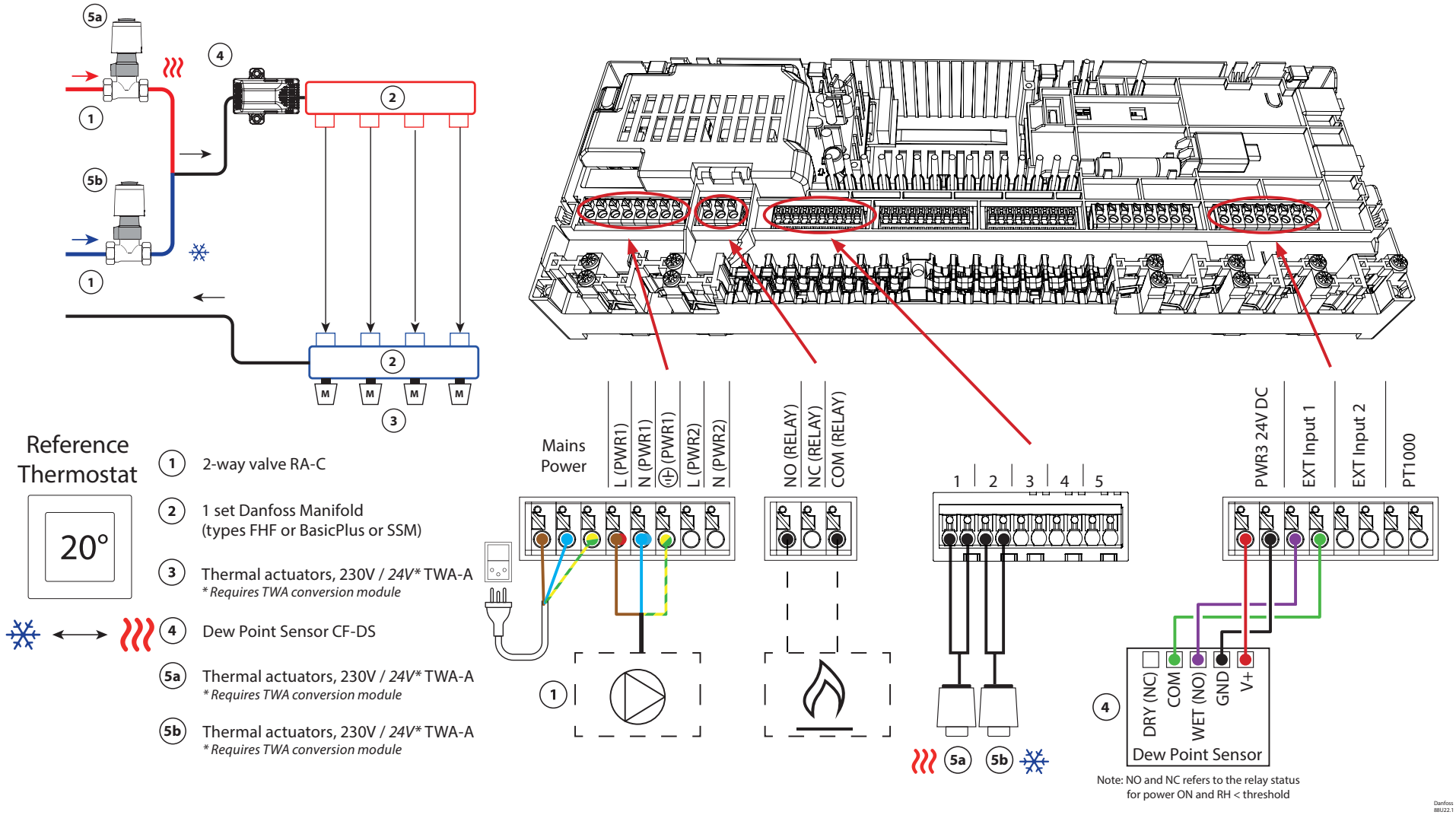

© Danfoss | Climate Solutions | 2026.09 | 28

Application **07** *Continued*

Explanation of heating and cooling for end user

No cooling will occur ❄ until the reference room temperature has exceeded the set temperature + set dead band for longer than the set time delay. For example, after the room's temperature has been over 25 °C (21 °C + 4K) for six hours.

The room's temperature will never be cooled further than two degrees above the set temperature. If the temperature is set to 21 °C, for example, the room will be cooled to 23 °C. Heating))) will activate as soon as the room temperature drops below the set temperature.

Installer App settings

Function	Factory setting	
	Off	On
PWM+ proportional control of actuator outputs		•
Heat pump optimizer – maintenance of minimum flow	•	
Dead band heating/cooling changeover	4K	
Time delay for changeover to cooling mode	6h	

Required accessories

1	2-way control valve RA-C DN20	013G3096
	Compression ferrule set 22mm x 1" for RA-C 20	013U0135 (x4)
2	Stainless steel floor heating manifold SSM-F, 2–12 groups	088U0752 to 088U0762
	Set of 2 mounting brackets	088U0585
	Set of 2 ball valves 1"	088U0822
3	Thermal actuator TWA-A 230V NC suitable for SSM-F manifold	088H3112
4	Dew point sensor CF-DS	088U0251
5a/b	Thermal actuator TWA-A 230V NC suitable for RA-C DN20	088H3112 (x2)

© Danfoss | Climate Solutions | 2026.09 | 29

Notes

Drawings

© Danfoss | Climate Solutions | 2026.09 | 30

Application **08**

3-pipe heating/cooling system with 2 ball valves with actuators, changeover to cooling based on reference thermostat

Requires an Advanced Main Controller

Application description
In this application, two 230V two-way motorized ball valves are used to change over between heating and cooling modes. The ball valve for cooling will open if one or more rooms require cooling. The ball valve for heating will open if one or more rooms require heating.

If it is not possible to prevent the supply temperature from dropping below the dew point in cooling mode, it is strongly recommended that you add a dew point sensor. Condensation can result in permanent damage to the floor's construction and finish.

The changeover between heating and cooling is controlled based on a reference thermostat. In nearly all cases, the living room is used as the reference.

To prevent excessive switching between heating and cooling modes, the following conditions must be met for the system to change over to cooling mode:
- The room temperature measured by the reference thermostat must exceed the set room temperature + dead band (adjustable from 0–4K).
- The reference thermostat did not have a heating demand during the time delay (adjustable from 0–24 hours).
- If present, dew point monitoring must be inactive.
- The room thermostat must have cooling enabled (default = enabled).

Setting one thermostat as the reference thermostat
In this application, one thermostat is set up as a reference thermostat.
The temperature in this room determines whether the system is in heating or cooling mode.

There are two ways to set up a reference thermostat:
1. Using the Installer App on a smartphone
2. Using the installer menu on the thermostat itself
   To do so, set the **ME.6** setting to **ON**

Disabling cooling (Bathroom)
If there is a bathroom with underfloor heating and an Icon2™ room thermostat, you may want to disable cooling for this room. Cooling a bathroom will cause condensation to form on the floor.

There are two ways to disable cooling mode for a room:
1. Using the Installer App on a smartphone
2. Using the installer menu on the thermostat itself
   To do so, set the **ME.7** setting to **OFF**

© Danfoss | Climate Solutions | 2026.09 | 31

App 8

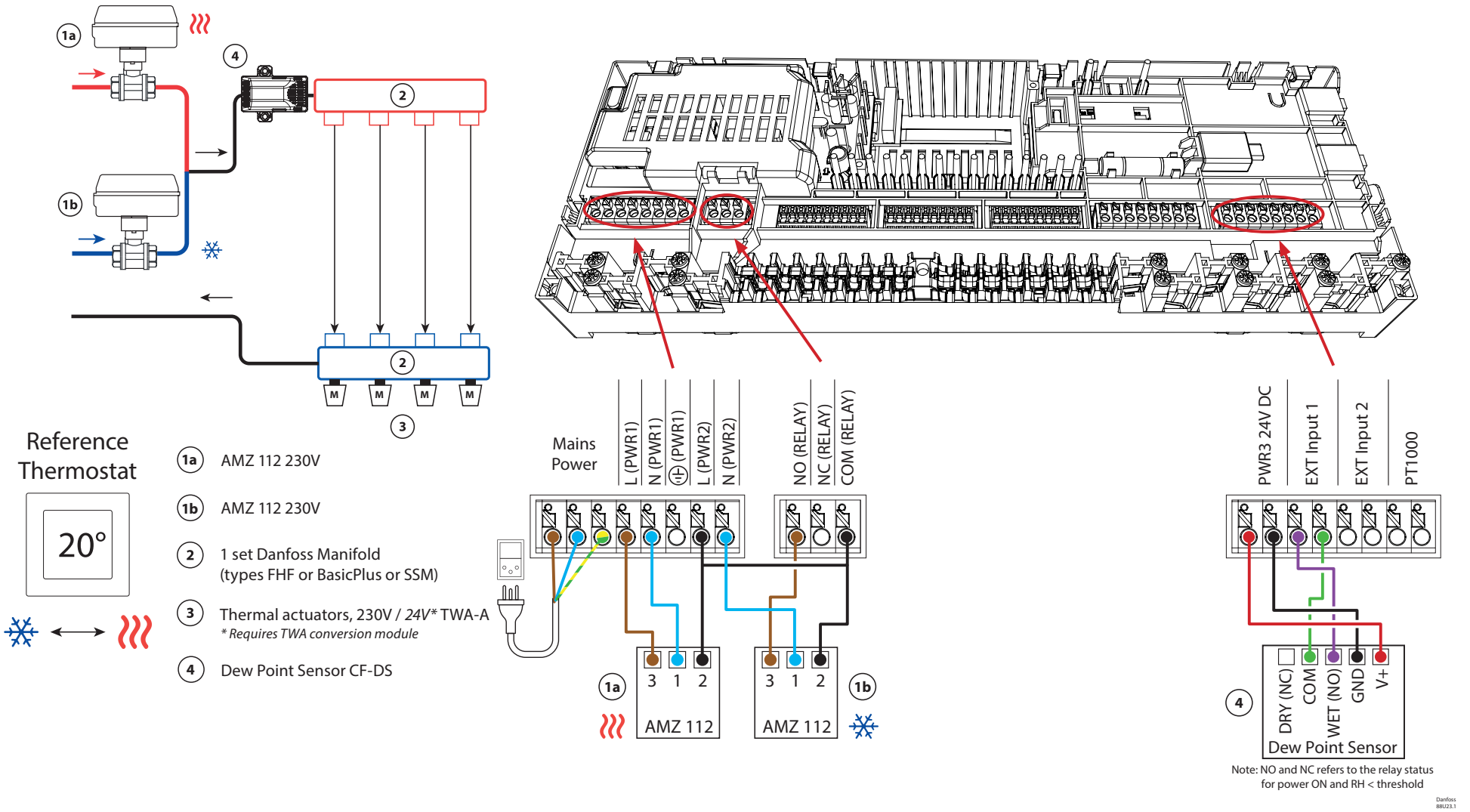
1a
1b
2
3
4
M
Reference Thermostat
20°
1a AMZ 112 230V
1b AMZ 112 230V
2 1 set Danfoss Manifold (types FHF or BasicPlus or SSM)
3 Thermal actuators, 230V / 24V* TWA-A
* Requires TWA conversion module
4 Dew Point Sensor CF-DS
Mains Power
L (PWR1)
N (PWR1)
(PWR1)
L (PWR2)
N (PWR2)
NO (RELAY)
NC (RELAY)
COM (RELAY)
3 1 2
AMZ 112
PWR3 24V DC
EXT Input 1
EXT Input 2
PT1000
DRY (NC)
COM
WET (NO)
GND
V+
Dew Point Sensor
Note: NO and NC refers to the relay status for power ON and RH < threshold

Application **08** *Continued*

Explanation of heating and cooling for end user

No cooling will occur ❄ until the reference room's temperature has exceeded the set temperature + set dead band for longer than the set time delay. For example, after the room's temperature has been over 25 °C (21 °C + 4K) for six hours.

The room's temperature will never be cooled further than two degrees above the set temperature. If the temperature is set to 21 °C, for example, the room will be cooled to 23 °C. Heating))) will activate as soon as the room temperature drops below the set temperature.

Installer App settings

Function	Factory setting	
	Off	On
PWM+ proportional control of actuator outputs		•
Heat pump optimizer – maintenance of minimum flow	•	
Dead band heating/cooling changeover	4K	
Time delay for changeover to cooling mode	6h	

Required accessories

1a/b	2-way motorized ball valve 230V AMZ 112 DN20	082G5407 (x2)
2	Stainless steel floor heating manifold SSM-F, 2–12 groups	088U0752 to 088U0762
	Set of 2 mounting brackets	088U0585
	Set of 2 ball valves 1"	088U0822
3	Thermal actuator TWA-A 230V NC suitable for SSM-F manifold	088H3112
4	Dew point sensor CF-DS	088U0251

© Danfoss | Climate Solutions | 2026.09 | 33

Notes

Drawings

© Danfoss | Climate Solutions | 2026.09 | 34

Application **09**

4-pipe heating/cooling system with 6-way motorized ball valve, changeover to cooling based on reference thermostat

Requires an Advanced Main Controller

Application description
In this application, a 230V 6-way motorized ball valve is used to change over between heating and cooling modes.

The RELAY activates when the system is in heating mode and is used to control the 6-way ball valve. The PWR1 output is active in both heating and cooling mode. It can optionally be used to operate a 230V 2-way control valve. This acts as an additional shut-off valve when there is no need for heat or cooling, reducing unnecessary consumption.

If it is not possible to prevent the supply temperature from dropping below the dew point in cooling mode, it is strongly recommended that you add a dew point sensor. Condensation can result in permanent damage to the floor's construction and finish.

The changeover between heating and cooling is controlled based on a reference thermostat. In nearly all cases, the living room is used as the reference.

To prevent excessive switching between heating and cooling modes, the following conditions must be met for the system to change over to cooling mode:
- The room temperature measured by the reference thermostat must exceed the set room temperature + dead band (adjustable from 0–4K).
- The reference thermostat did not have a heating demand during the time delay (adjustable from 0–24 hours).
- If present, dew point monitoring must be inactive
- The room thermostat must have cooling enabled (default = enabled).

Setting one thermostat as the reference thermostat
In this application, one thermostat is set up as a reference thermostat.
The temperature in this room determines whether the system is in heating or cooling mode.

There are two ways to set up a reference thermostat:
1. Using the Installer App on a smartphone
2. Using the installer menu on the thermostat itself
   To do so, set the **ME.6** setting to **ON**

Disabling cooling (Bathroom)
If there is a bathroom with underfloor heating and an Icon2™ room thermostat, you may want to disable cooling for this room. Cooling a bathroom will cause condensation to form on the floor.

There are two ways to disable cooling mode for a room:
1. Using the Installer App on a smartphone
2. Using the installer menu on the thermostat itself
   To do so, set the **ME.7** setting to **OFF**

© Danfoss | Climate Solutions | 2026.09 | 35

App 9

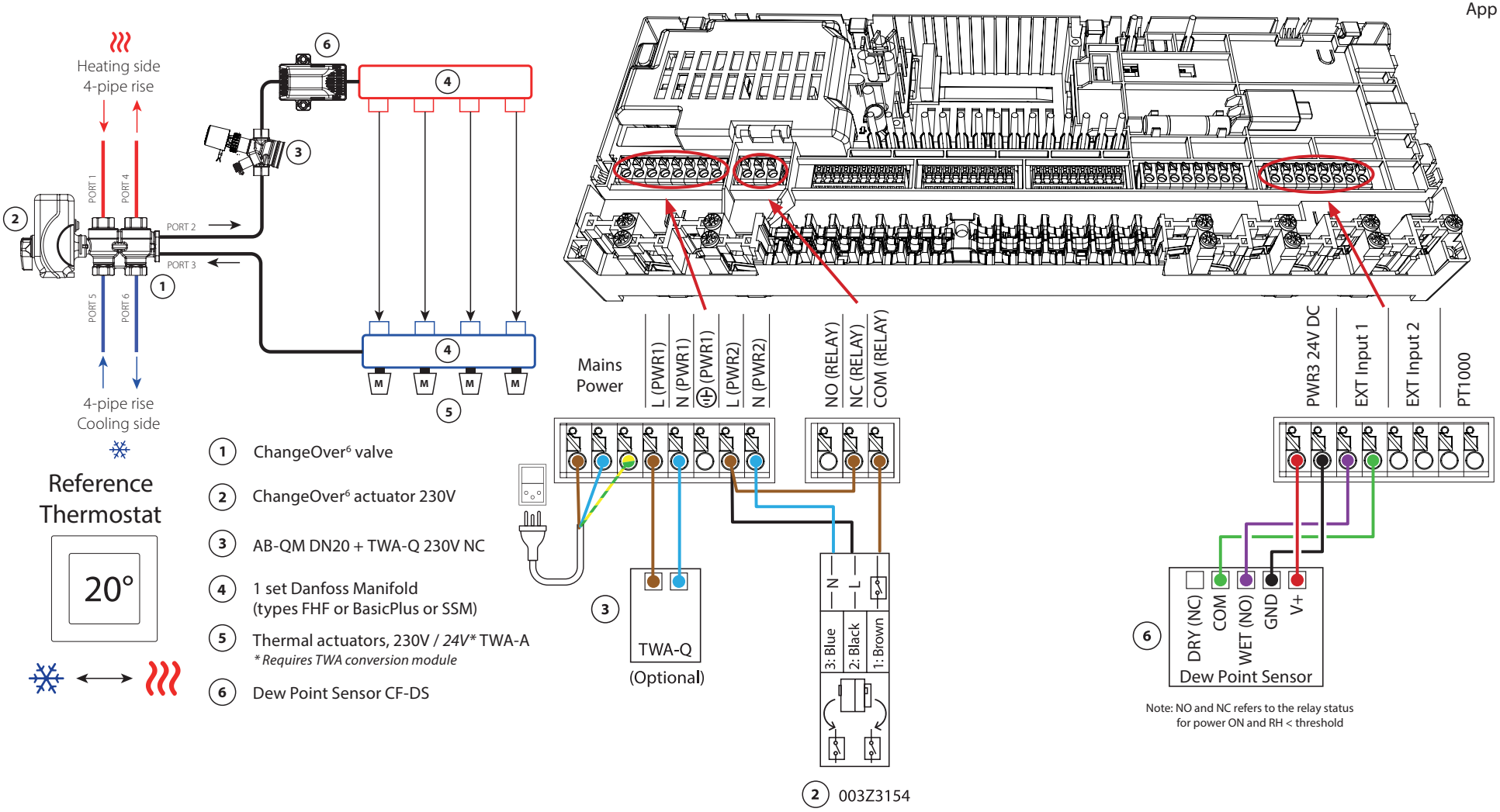
Heating side
4-pipe rise
PORT 1
PORT 4
PORT 2
PORT 3
PORT 5
PORT 6
4-pipe rise
Cooling side
Reference
Thermostat
20°
1 ChangeOver⁶ valve
2 ChangeOver⁶ actuator 230V
3 AB-QM DN20 + TWA-Q 230V NC
4 1 set Danfoss Manifold
(types FHF or BasicPlus or SSM)
5 Thermal actuators, 230V / *24V** TWA-A
** Requires TWA conversion module*
6 Dew Point Sensor CF-DS
Mains
Power
L (PWR1)
N (PWR1)
(PWR1)
L (PWR2)
N (PWR2)
NO (RELAY)
NC (RELAY)
COM (RELAY)
PWR3 24V DC
EXT Input 1
EXT Input 2
PT1000
TWA-Q
(Optional)
3: Blue
2: Black
1: Brown
N
L
DRY (NC)
COM
WET (NO)
GND
V+
Dew Point Sensor
Note: NO and NC refers to the relay status
for power ON and RH < threshold
2 003Z3154

Application **9** *Continued*

Explanation of heating and cooling for end user

No cooling will occur ❄ until the reference room's temperature has exceeded the set temperature + set dead band for longer than the set time delay. For example, after the room's temperature has been over 25 °C (21 °C + 4K) for six hours.

The room's temperature will never be cooled further than two degrees above the set temperature. If the temperature is set to 21 °C, for example, the room will be cooled to 23 °C. Heating))) will activate as soon as the room temperature drops below the set temperature.

Installer App settings

Function	Factory setting	
	Off	On
PWM+ proportional control of actuator outputs		•
Heat pump optimizer – maintenance of minimum flow	•	
Dead band heating/cooling changeover	4K	
Time delay for changeover to cooling mode	6h	

Required accessories

1	6-way ball valve ChangeOver6 DN20	003Z3151
2	Actuator 230V suitable for ChangeOver6 DN20	003Z3154
3	2-way control valve with flow regulator AB-QM DN20	003Z8203
	Thermal actuator TWA-Q 230V NC suitable for AB-QM DN20	082F1600
	Threaded fittings R3/4" suitable for AB-QM DN20	003Z0233 (x2)
4	Stainless steel floor heating manifold SSM-F, 2–12 groups	088U0752 to 088U0762
	Set of 2 mounting brackets	088U0585
	Set of 2 ball valves 1"	088U0822
5	Thermal actuator TWA-A 230V NC suitable for SSM-F manifold	088H3112
6	Dew point sensor CF-DS	088U0251

© Danfoss | Climate Solutions | 2026.09 | 37

Notes

Drawings

© Danfoss | Climate Solutions | 2026.09 | 38

Application **10**

4-pipe heating/cooling system with four 2-way control valves with thermal actuators, changeover to cooling based on reference thermostat

Requires an Advanced Main Controller

Application description
In this application, four 2-way motorized control valves are used to change over between heating and cooling modes. The thermal actuators on the 2-way control valves for cooling will stay open as long as the system is in cooling mode. The thermal actuators for heating will be open as long as the system is in heating mode.

Optionally, you can use the 230V pump control PWR1 and RELAY heat source control.

If it is not possible to prevent the supply temperature from dropping below the dew point in cooling mode, it is strongly recommended that you add a dew point sensor. Condensation can result in permanent damage to the floor's construction and finish.

The changeover between heating and cooling is controlled based on a reference thermostat. In nearly all cases, the living room is used as the reference.

To prevent excessive switching between heating and cooling modes, the following conditions must be met for the system to change over to cooling mode:
- The room temperature measured by the reference thermostat must exceed the set room temperature + dead band (adjustable from 0–4K).
- The reference thermostat did not have a heating demand during the time delay (adjustable from 0–24 hours).
- If present, dew point monitoring must be inactive.
- The room thermostat must have cooling enabled (default = enabled).

Setting one thermostat as the reference thermostat
In this application, one thermostat is set up as a reference thermostat.
The temperature in this room determines whether the system is in heating or cooling mode.

There are two ways to set up a reference thermostat:
1. Using the Installer App on a smartphone
2. Using the installer menu on the thermostat itself
   To do so, set the **ME.6** setting to **ON**

Disabling cooling (Bathroom)
If there is a bathroom with underfloor heating and an Icon2™ room thermostat, you may want to disable cooling for this room. Cooling a bathroom will cause condensation to form on the floor.

There are two ways to disable cooling mode for a room:
1. Using the Installer App on a smartphone
2. Using the installer menu on the thermostat itself
   To do so, set the **ME.7** setting to **OFF**

© Danfoss | Climate Solutions | 2026.09 | 39

App 10

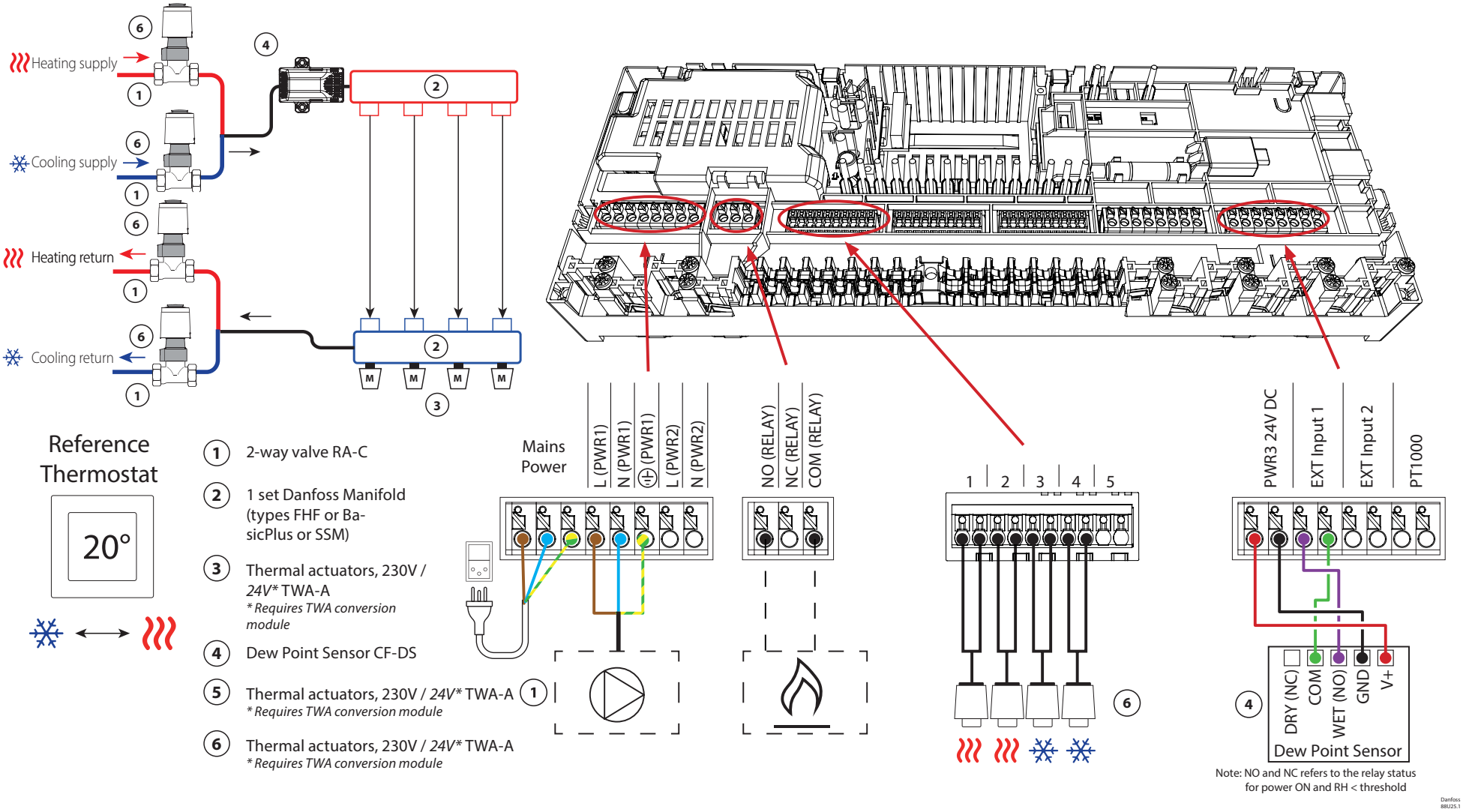

© Danfoss | Climate Solutions | 2026.09 | 40

Application **10** *Continued*

Explanation of heating and cooling for end user

No cooling will occur ❄ until the reference room temperature has exceeded the set temperature + set dead band for longer than the set time delay. For example, after the room's temperature has been over 25 °C (21 °C + 4K) for six hours.

The room's temperature will never be cooled further than two degrees above the set temperature. If the temperature is set to 21 °C, for example, the room will be cooled to 23 °C. Heating))) will activate as soon as the room temperature drops below the set temperature.

Installer App settings

Function	Factory setting	
	Off	On
PWM+ proportional control of actuator outputs		•
Heat pump optimizer – maintenance of minimum flow	•	
Dead band heating/cooling changeover	4K	
Time delay for changeover to cooling mode	6h	

Required accessories

1	2-way control valve RA-C DN20	013G3096
	Compression ferrule set 22mm x 1" for RA-C 20	013U0135 (x8)
2	Stainless steel floor heating manifold SSM-F, 2–12 groups	088U0752 to 088U0762
	Set of 2 mounting brackets	088U0585
	Set of 2 ball valves 1"	088U0822
3	Thermal actuator TWA-A 230V NC suitable for SSM-F manifold	088H3112
4	Dew point sensor CF-DS	088U0251
5/6	Thermal actuator TWA-A 230V NC suitable for RA-C DN20	088H3112 (x4)

© Danfoss | Climate Solutions | 2026.09 | 41

Notes

Drawings

© Danfoss | Climate Solutions | 2026.09 | 42

Application **11**

4-pipe heating/cooling system with 6-way ball valve with fixed heating and cooling flow temperature control, changeover to cooling based on reference thermostat

Requires an Advanced Main Controller

Application description
The RELAY activates when the system is in heating mode and is used to control the 230V 6-way ball valve. The 230V pump control PWR1 is active in both heating and cooling mode.

The supply water temperature set for both heating and cooling is controlled by the TWA-Q thermal actuator connected to the 'Shunt 24V DC' output.
The PT1000 temperature sensor on the supply line measures the supply temperature.
If there is no demand for heat or cooling in one or more rooms, the actuator will remain closed.
The AB-QM can also be used to set the desired maximum volumetric flow rate.
To prevent damage to the floor's construction and finish, add a dew point sensor.

The changeover between heating and cooling is controlled based on a reference thermostat. The living room is set as the reference.

To prevent excessive switching between heating and cooling modes, the following conditions must be met for the system to change over to cooling mode:
- The room temperature measured by the reference thermostat must exceed the set room temperature + dead band (adjustable 0–4K).
- The reference thermostat did not have a heating demand during the time delay (adjustable from 0–24 hours).
- If present, dew point monitoring must be inactive.
- The room thermostat must have cooling enabled (default = enabled).

Setting one thermostat as the reference thermostat
In this application, one thermostat is set up as a reference thermostat.
The temperature in this room determines whether the system is in heating or cooling mode.

There are two ways to set up a reference thermostat:
1. Using the Installer App on a smartphone
2. Using the installer menu on the thermostat itself
   To do so, set the **ME.6** setting to **ON**

Disabling cooling (Bathroom)
If there is a bathroom with underfloor heating and an Icon2™ room thermostat, you may want to disable cooling for this room. Cooling a bathroom will cause condensation to form on the floor.

There are two ways to disable cooling mode for a room:
1. Using the Installer App on a smartphone
2. Using the installer menu on the thermostat itself
   To do so, set the **ME.7** setting to **OFF**

© Danfoss | Climate Solutions | 2026.09 | 43

App 11

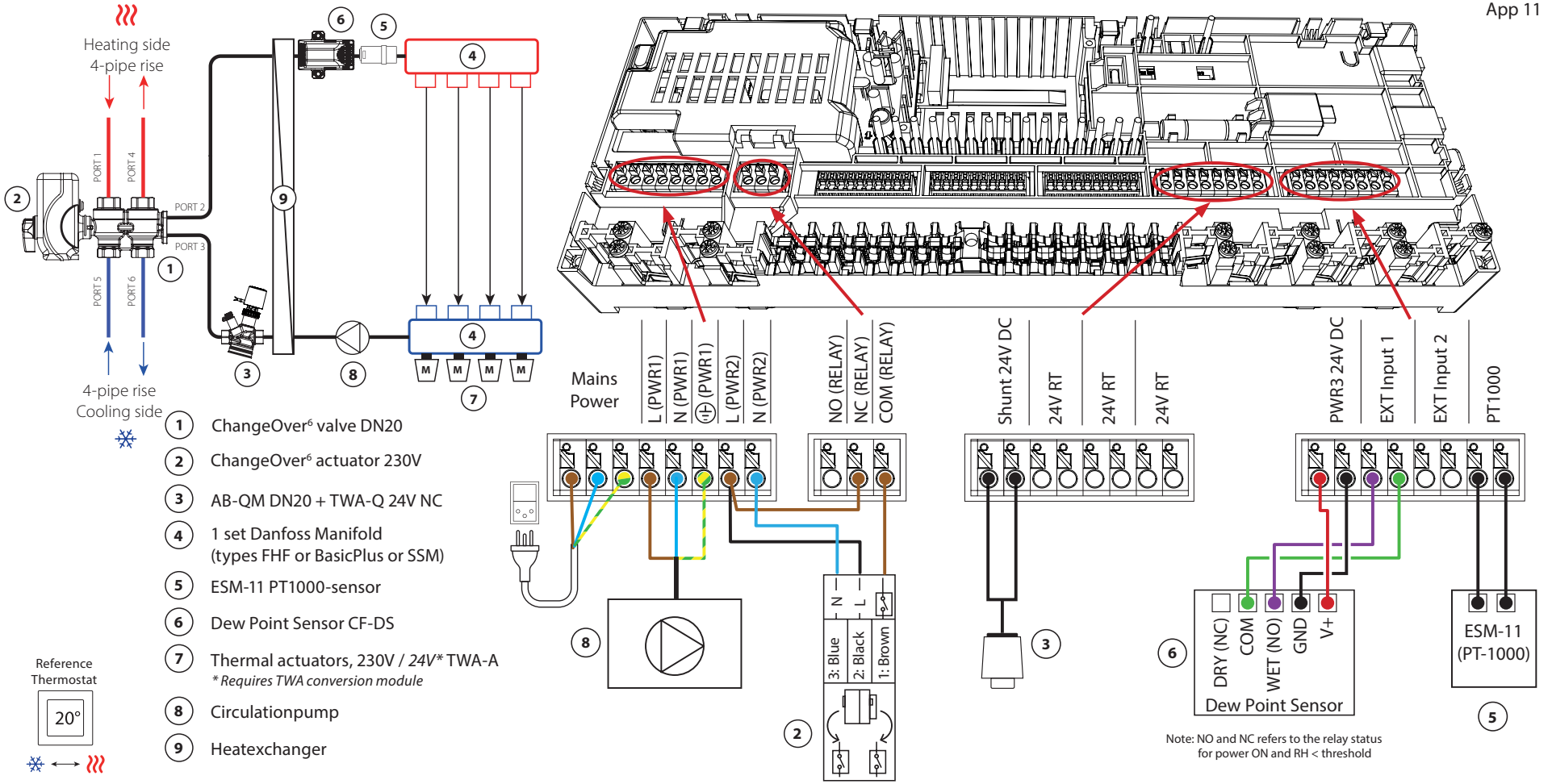

1. ChangeOver[6] valve DN20
2. ChangeOver[6] actuator 230V
3. AB-QM DN20 + TWA-Q 24V NC
4. 1 set Danfoss Manifold (types FHF or BasicPlus or SSM)
5. ESM-11 PT1000-sensor
6. Dew Point Sensor CF-DS
7. Thermal actuators, 230V / *24V** TWA-A
   ** Requires TWA conversion module*
8. Circulationpump
9. Heatexchanger

Danfoss
88U28.1

Application **11** *Continued*

Explanation of heating and cooling for end user

No cooling will occur ❄ until the reference room temperature has exceeded the set temperature + set dead band for longer than the set time delay. For example, after the room's temperature has been over 25 °C (21 °C + 4K) for six hours.

The room's temperature will never be cooled further than two degrees above the set temperature. If the temperature is set to 21 °C, for example, the room will be cooled to 23 °C. Heating))) will activate as soon as the room temperature drops below the set temperature.

Installer App settings

Function	Factory setting	
	Off	On
PWM+ proportional control of actuator outputs		•
Heat pump optimizer – maintenance of minimum flow	•	
PWR1 switch-on delay of 3 minutes		•
Dead band heating/cooling changeover	4K	
Time delay for changeover to cooling mode	6h	
Heating supply temperature	40.0 °C	
Cooling supply temperature	18.0 °C	
Heating safety temperature	50.0 °C	
Cooling safety temperature	17.0 °C	

Required accessories

1	6-way ball valve ChangeOver6 DN20	003Z3151
2	Actuator 230V suitable for ChangeOver6 DN20	003Z3154
3	2-way control valve with flow regulator AB-QM DN20	003Z8203
	Thermal actuator TWA-Q 24V NC suitable for AB-QM DN20	082F1602
	Threaded fittings R3/4" suitable for AB-QM DN20	003Z0233 (x2)
4	Stainless steel floor heating manifold SSM-F, 2–12 groups	088U0752 to 088U0762
	Set of 2 mounting brackets	088U0585
	Set of 2 ball valves 1"	088U0822
5	PT1000 temperature sensor ESM-11	087B1165
6	Dew point sensor CF-DS	088U0251
7	Thermal actuator TWA-A 230V NC suitable for SSM-F manifold	088H3112
8	"Circulation pump Wilo Para 15-130/6"	145H4269
9	Heat exchanger XB06H-1-26	145H3671

© Danfoss | Climate Solutions | 2026.09 | 45

Notes

Drawings

© Danfoss | Climate Solutions | 2026.09 | 46

Application **12**

4-pipe heating/cooling system with 6-way ball valve with demand-controlled heating supply temperature and fixed cooling supply temperature, changeover to cooling based on reference thermostat

Requires an Advanced Main Controller

Application description
The RELAY activates when the system is in heating mode and is used to control the 230V 6-way ball valve. The 230V pump control PWR1 is active in both heating and cooling mode.

The water temperature for heating and cooling is controlled by the TWA-Q thermal actuator connected to output 'Shunt 24V DC'. The optimum supply temperature in heating mode is calculated based on the heating demand for the home. The PT1000 sensor on the supply line measures the temperature of the water. If there is no demand for heat or cooling in one or more rooms, the actuator will remain closed. The AB-QM can also be used to set the desired maximum volumetric flow rate. To prevent damage to the floor's construction and finish, add a dew point sensor.

The changeover between heating and cooling is controlled based on a reference thermostat. The living room is set as the reference.

To prevent excessive switching between heating and cooling mode, the following conditions must be met for the system to change over to cooling mode:
- The room temperature measured by the reference thermostat must exceed the set room temperature + dead band (adjustable 0–4K).
- There was no heating demand for the reference thermostat during the time delay (adjustable 0–24 hours).
- If present, dew point monitoring must be inactive.
- The room thermostat must have cooling enabled (default = enabled).

Setting one thermostat as the reference thermostat
In this application, one thermostat is set up as a reference thermostat.
The temperature in this room determines whether the system is in heating or cooling mode.

There are two ways to set up a reference thermostat:
1. Using the Installer App on a smartphone
2. Using the installer menu on the thermostat itself
   To do so, set the **ME.6** setting to **ON**

Disabling cooling (Bathroom)
If the bathroom has underfloor heating and has an Icon2™ room thermostat, you can disable cooling for this room. Cooling a bathroom will cause condensation to form on the floor.

There are two ways to disable cooling mode for a room:
1. Using the Installer App on a smartphone
2. Using the installer menu on the thermostat itself
   To do so, set the **ME.7** setting to **OFF**

© Danfoss | Climate Solutions | 2026.09 | 47

App 12

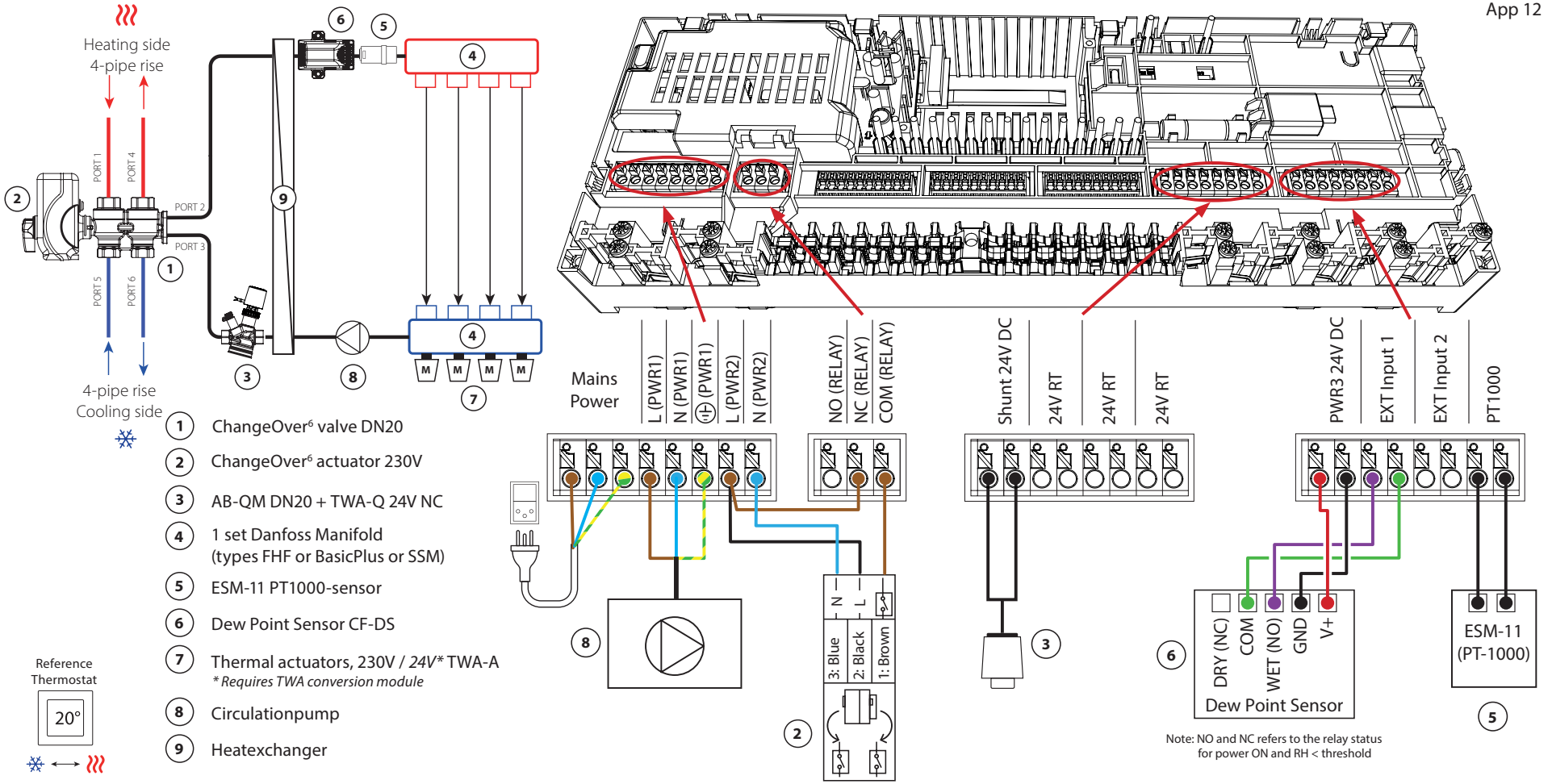
Heating side
4-pipe rise
4-pipe rise
Cooling side
PORT 1
PORT 2
PORT 3
PORT 4
PORT 5
PORT 6
Mains Power
L (PWR1)
N (PWR1)
(PWR1)
L (PWR2)
N (PWR2)
NO (RELAY)
NC (RELAY)
COM (RELAY)
Shunt 24V DC
24V RT
24V RT
24V RT
PWR3 24V DC
EXT Input 1
EXT Input 2
PT1000
3: Blue
2: Black
1: Brown
N
L
DRY (NC)
COM
WET (NO)
GND
V+
Dew Point Sensor
ESM-11
(PT-1000)
Reference Thermostat
20°
1 ChangeOver⁶ valve DN20
2 ChangeOver⁶ actuator 230V
3 AB-QM DN20 + TWA-Q 24V NC
4 1 set Danfoss Manifold (types FHF or BasicPlus or SSM)
5 ESM-11 PT1000-sensor
6 Dew Point Sensor CF-DS
7 Thermal actuators, 230V / *24V** TWA-A
** Requires TWA conversion module*
8 Circulationpump
9 Heatexchanger
Note: NO and NC refers to the relay status for power ON and RH < threshold

Application **12** *Continued*

Explanation of heating and cooling for end user

No cooling will occur ❄ until the reference room temperature has exceeded the set temperature + set dead band for longer than the set time delay. For example, after the room's temperature has been over 25 °C (21 °C + 4K) for six hours.

The room's temperature will never be cooled further than two degrees above the set temperature. If the temperature is set to 21 °C, for example, the room will be cooled to 23 °C. Heating))) will activate as soon as the room temperature drops below the set temperature.

Installer App settings

Function	Factory setting	
	Off	On
PWM+ proportional control of actuator outputs		•
Heat pump optimizer – maintenance of minimum flow	•	
PWR1 switch-on delay of 3 minutes		•
Dead band heating/cooling changeover	4K	
Time delay for changeover to cooling mode	6h	
Heating supply temperature range, demand-controlled	25.0–40.0 °C	
Heating safety temperature	50.0 °C	
Cooling supply temperature	18.0 °C	
Cooling safety temperature	17.0 °C	

Required accessories

1	6-way ball valve ChangeOver6 DN20	003Z3151
2	Actuator 230V suitable for ChangeOver6 DN20	003Z3154
3	2-way control valve with flow regulator AB-QM DN20	003Z8203
	Thermal actuator TWA-Q 24V NC suitable for AB-QM DN20	082F1602
	Threaded fittings R3/4" suitable for AB-QM DN20	003Z0233 (x2)
4	Stainless steel floor heating manifold SSM-F, 2–12 groups	088U0752 to 088U0762
	Set of 2 mounting brackets	088U0585
	Set of 2 ball valves 1"	088U0822
5	PT1000 temperature sensor ESM-11	087B1165
6	Dew point sensor CF-DS	088U0251
7	Thermal actuator TWA-A 230V NC suitable for SSM-F manifold	088H3112
8	"Circulation pump Wilo Para 15-130/6"	145H4269
9	Heat exchanger XB06H-1-26	145H3671

© Danfoss | Climate Solutions | 2026.09 | 49

Notes

Drawings

© Danfoss | Climate Solutions | 2026.09 | 50

Application **13**

4-pipe heating/cooling system with 6-way ball valve with fixed heating and cooling supply temperature control, changeover to cooling based on external (manual) potential-free NO contact

Requires an Advanced Main Controller

Application description
The RELAY activates when the system is in heating mode and is used to control the 230V 6-way ball valve. The 230V pump control PWR1 is active in both heating and cooling mode.

The supply water temperature set for both heating and cooling is controlled by the TWA-Q thermal actuator connected to the 'Shunt 24V DC' output. The PT1000 temperature sensor on the supply line measures the supply temperature. If there is no demand for heat or cooling in one or more rooms, the actuator will remain closed. The AB-QM can also be used to set the desired maximum volumetric flow rate. To prevent damage to the floor's construction and finish, add a dew point sensor.

A relay or potential-free contact is connected to input IN2 to control the changeover between heating and cooling modes. When the external contact is closed, the system will change over to cooling mode.

Disabling cooling (Bathroom)
If there is a bathroom with underfloor heating and an Icon2™ room thermostat, you may want to disable cooling for this room. Cooling a bathroom will cause condensation to form on the floor.

There are two ways to disable cooling mode for a room:
1. Using the Installer App on a smartphone
2. Using the installer menu on the thermostat itself
   To do so, set the **ME.7** setting to **OFF**

© Danfoss | Climate Solutions | 2026.09 | 51

App 13

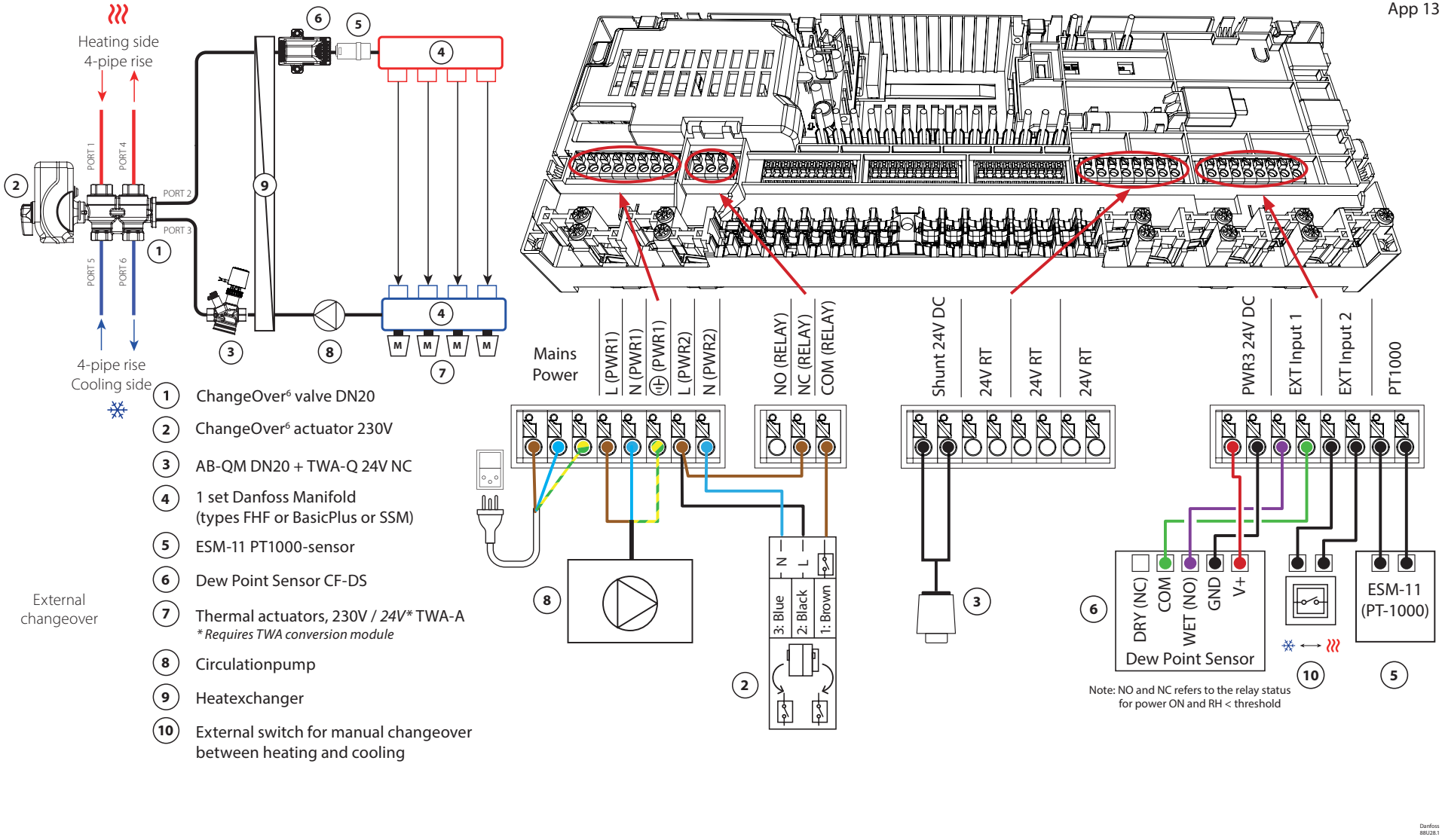

1. ChangeOver[6] valve DN20
2. ChangeOver[6] actuator 230V
3. AB-QM DN20 + TWA-Q 24V NC
4. 1 set Danfoss Manifold (types FHF or BasicPlus or SSM)
5. ESM-11 PT1000-sensor
6. Dew Point Sensor CF-DS
7. Thermal actuators, 230V / *24V** TWA-A
   ** Requires TWA conversion module*
8. Circulationpump
9. Heatexchanger
10. External switch for manual changeover between heating and cooling

Application **13** *Continued*

Installer App settings

Function	Factory setting	
	Off	On
PWM+ proportional control of actuator outputs		•
Heat pump optimizer – maintenance of minimum flow	•	
PWR1 switch-on delay of 3 minutes		•
Heating supply temperature	40.0 °C	
Cooling supply temperature	18.0 °C	
Heating safety temperature	50.0 °C	
Cooling safety temperature	17.0 °C	

Explanation of heating and cooling for end user

No cooling ❄ will occur until the Icon 2 Main Controller is switched to cooling mode via EXT Input 2 and a hysteresis of 2 K above the thermostat's set temperature has been exceeded.

For example, if the thermostat is set to 22 °C, cooling will not start until the room temperature exceeds 24 °C.

The room temperature is never cooled to more than 2 °C above the set temperature. For example, if the temperature is set to 21 °C, the room will be cooled to 23 °C.

Heating ≋ is only activated again when EXT Input 2 is opened again.

Required accessories

1	6-way ball valve ChangeOver6 DN20	003Z3151
2	Actuator 230V suitable for ChangeOver6 DN20	003Z3154
3	2-way control valve with flow regulator AB-QM DN20	003Z8203
	Thermal actuator TWA-Q 24V NC suitable for AB-QM DN20	082F1602
	Threaded fittings R3/4" suitable for AB-QM DN20	003Z0233 (x2)
4	Stainless steel floor heating manifold SSM-F, 2–12 groups	088U0752 to 088U0762
	Set of 2 mounting brackets	088U0585
	Set of 2 ball valves 1"	088U0822
5	PT1000 temperature sensor ESM-11	087B1165
6	Dew point sensor CF-DS	088U0251
7	Thermal actuator TWA-A 230V NC suitable for SSM-F manifold	088H3112
8	"Circulation pump Wilo Para 15-130/6"	145H4269
9	Heat exchanger XB06H-1-26	145H3671
10	Wall switch for manual changeover to cooling	External supplier

Notes

Drawings

© Danfoss | Climate Solutions | 2026.09 | 54

Application **14**

4-pipe heating/cooling system with 6-way ball valve with demand-controlled heating supply temperature and fixed cooling supply temperature, changeover to cooling based on external (manual) potential-free NO contact

Requires an Advanced Main Controller

Application description
The RELAY activates when the system is in heating mode and is used to control the 230V 6-way ball valve. The 230V pump control PWR1 is active in both heating and cooling mode.

The water temperature for heating and cooling is controlled by the TWA-Q thermal actuator connected to output 'Shunt 24V DC'. The optimum supply temperature in heating mode is calculated based on the heating demand for the home. The PT1000 sensor on the supply line measures the temperature of the water. If there is no demand for heat or cooling in one or more rooms, the actuator will remain closed.

The AB-QM can also be used to set the desired maximum volumetric flow rate.

To prevent damage to the floor's construction and finish, add a dew point sensor.

A relay or potential-free contact is connected to input IN2 to control the changeover between heating and cooling modes. When the external contact is closed, the system will change over to cooling mode.

Disabling cooling (Bathroom)
If there is a bathroom with underfloor heating and an Icon2™ room thermostat, you may want to disable cooling for this room. Cooling a bathroom will cause condensation to form on the floor.

There are two ways to disable cooling mode for a room:
1. Using the Installer App on a smartphone
2. Using the installer menu on the thermostat itself
   To do so, set the **ME.7** setting to **OFF**

© Danfoss | Climate Solutions | 2026.09 | 55

App 14

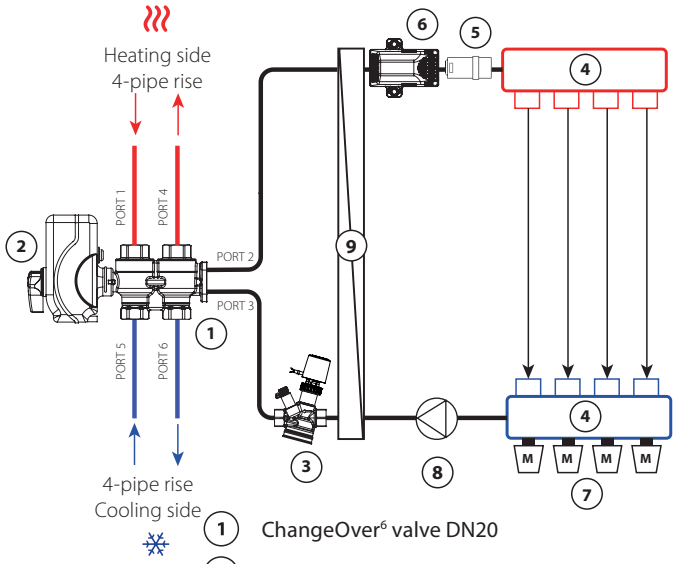

1. ChangeOver[6] valve DN20
2. ChangeOver[6] actuator 230V
3. AB-QM DN20 + TWA-Q 24V NC
4. 1 set Danfoss Manifold (types FHF or BasicPlus or SSM)
5. ESM-11 PT1000-sensor
6. Dew Point Sensor CF-DS
7. Thermal actuators, 230V / *24V** TWA-A
   ** Requires TWA conversion module*
8. Circulationpump
9. Heatexchanger
10. External switch for manual changeover between heating and cooling

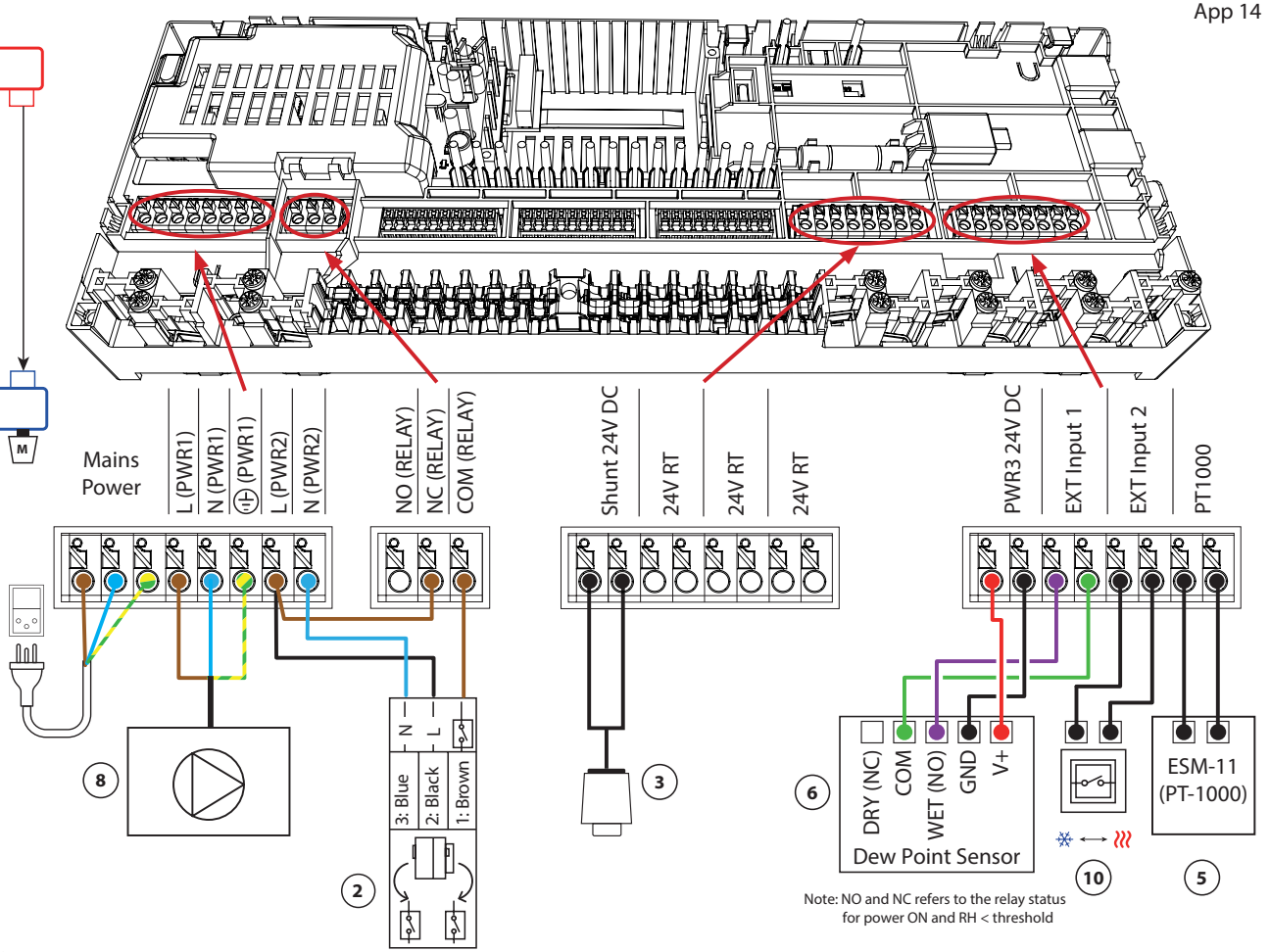

Note: NO and NC refers to the relay status for power ON and RH < threshold

Danfoss
88U29.1

© Danfoss | Climate Solutions | 2026.09 | 56

Application **14** *Continued*

Explanation of heating and cooling for end user

No cooling ❄ will occur until the Icon 2 Main Controller is switched to cooling mode via EXT Input 2 and a hysteresis of 2 K above the thermostat's set temperature has been exceeded.

For example, if the thermostat is set to 22 °C, cooling will not start until the room temperature exceeds 24 °C.

The room temperature is never cooled to more than 2 °C above the set temperature. For example, if the temperature is set to 21 °C, the room will be cooled to 23 °C.

Heating ≋ is only activated again when EXT Input 2 is opened again.

Installer App settings

Function	Factory setting	
	Off	On
PWM+ proportional control of actuator outputs		•
Heat pump optimizer – maintenance of minimum flow	•	
PWR1 switch-on delay of 3 minutes		•
Heating supply temperature range, demand-controlled	25.0–40.0 °C	
Heating safety temperature	50.0 °C	
Cooling supply temperature	18.0 °C	
Cooling safety temperature	17.0 °C	

Required accessories

1	6-way ball valve ChangeOver6 DN20	003Z3151
2	Actuator 230V suitable for ChangeOver6 DN20	003Z3154
3	2-way control valve with flow regulator AB-QM DN20	003Z8203
	Thermal actuator TWA-Q 24V NC suitable for AB-QM DN20	082F1602
	Threaded fittings R3/4" suitable for AB-QM DN20	003Z0233 (x2)
4	Stainless steel floor heating manifold SSM-F, 2–12 groups	088U0752 to 088U0762
	Set of 2 mounting brackets	088U0585
	Set of 2 ball valves 1"	088U0822
5	PT1000 temperature sensor ESM-11	087B1165
6	Dew point sensor CF-DS	088U0251
7	Thermal actuator TWA-A 230V NC suitable for SSM-F manifold	088H3112
8	"Circulation pump Wilo Para 15-130/6"	145H4269
9	Heat exchanger XB06H-1-26	145H3671
10	Wall switch for manual changeover to cooling	External supplier

© Danfoss | Climate Solutions | 2026.09 | 57

Notes

Drawings

© Danfoss | Climate Solutions | 2026.09 | 58

Application **15**

2-pipe heating/cooling system with (hybrid) heat pump, changeover to cooling based on external (manual) potential-free NO contact

Requires an Advanced Main Controller

Application description
This application makes it possible to send separate control signals for both heating and cooling demands to a heat pump or hybrid system. The PWR1 (230V output) is active when there is a heating demand and the RELAY (potential-free contact) is used for cooling.

To enable the PWR1 230V output to control the heat pump based on heating demand, the AMZ connection box converts the signal to a potential-free NO contact.

If it is not possible to prevent the supply temperature from dropping below the dew point in cooling mode, it is strongly recommended that you add a dew point sensor. Condensation can result in permanent damage to the floor's construction and finish.

A relay or potential-free contact is connected to input IN2 to control the changeover between heating and cooling modes. When the external contact is closed, the system will change over to cooling mode.

Disabling cooling (Bathroom)
If there is a bathroom with underfloor heating and an Icon2™ room thermostat, you may want to disable cooling for this room. Cooling a bathroom will cause condensation to form on the floor.

There are two ways to disable cooling mode for a room:
1. Using the Installer App on a smartphone
2. Using the installer menu on the thermostat itself
   To do so, set the **ME.7** setting to **OFF**

© Danfoss | Climate Solutions | 2026.09

App 15

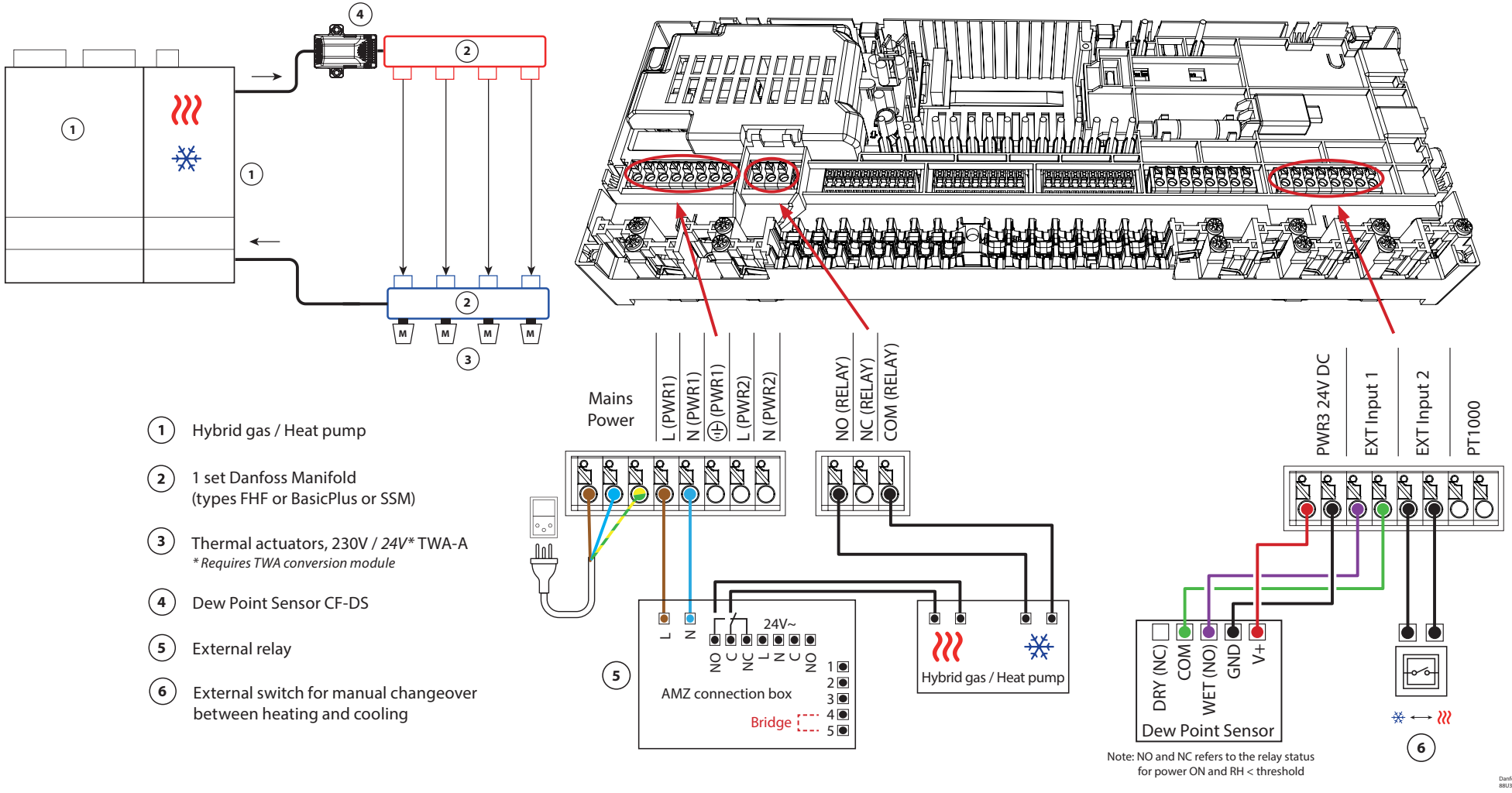

© Danfoss | Climate Solutions | 2026.09 | 60

Application **15** *Continued*

Explanation of heating and cooling for end user

No cooling will occur until the Icon 2 Main Controller is switched to cooling mode via EXT Input 2 and a hysteresis of 2 K above the thermostat's set temperature has been exceeded.

For example, if the thermostat is set to 22 °C, cooling will not start until the room temperature exceeds 24 °C.

The room temperature is never cooled to more than 2 °C above the set temperature. For example, if the temperature is set to 21 °C, the room will be cooled to 23 °C.

Heating is only activated again when EXT Input 2 is opened again.

Installer App settings

Function	Factory setting	
	Off	On
PWM+ proportional control of actuator outputs		•
Heat pump optimizer – maintenance of minimum flow	•	

Required accessories

1	Heat pump or hybrid system	External supplier
2	Stainless steel floor heating manifold SSM-F, 2–12 groups	088U0752 to 088U0762
	Set of 2 mounting brackets	088U0585
	Set of 2 ball valves 1"	088U0822
3	Thermal actuator TWA-A 230V NC suitable for SSM-F manifold	088H3112
4	Dew point sensor CF-DS	088U0251
5	External relay - AMZ connection box	082G1636
6	Wall switch for manual changeover to cooling	External supplier

© Danfoss | Climate Solutions | 2026.09 | 61

Notes

Drawings

© Danfoss | Climate Solutions | 2026.09 | 62

Application **16**

3-pipe heating/cooling system with 3-way motorized ball valve, changeover to cooling based on external potential-free NO contact

Requires an Advanced Main Controller

Application description
In this application, a 230V 3-way motorized ball valve is used to change over between heating and cooling modes.

The PWR1 230V output activates when the system is in cooling mode.

If it is not possible to prevent the supply temperature from dropping below the dew point in cooling mode, it is strongly recommended that you add a dew point sensor. Condensation can result in permanent damage to the floor's construction and finish.

A relay or potential-free contact is connected to input IN2 to control the changeover between heating and cooling modes. When the external contact is closed, the system will change over to cooling mode.

Disabling cooling (Bathroom)
If there is a bathroom with underfloor heating and an Icon2™ room thermostat, you may want to disable cooling for this room. Cooling a bathroom will cause condensation to form on the floor.

There are two ways to disable cooling mode for a room:
1. Using the Installer App on a smartphone
2. Using the installer menu on the thermostat itself
   To do so, set the **ME.7** setting to **OFF**

© Danfoss | Climate Solutions | 2026.09 | 63

App 16

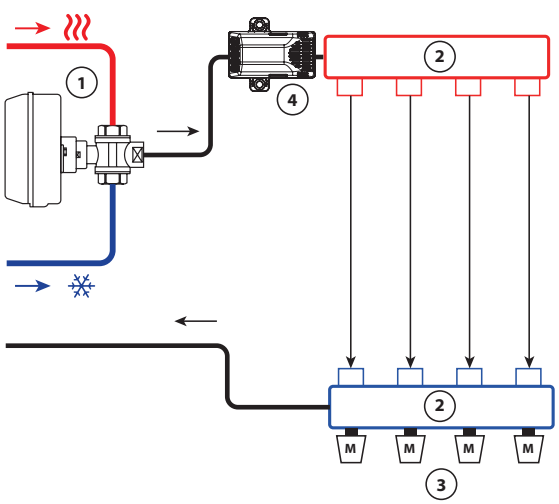

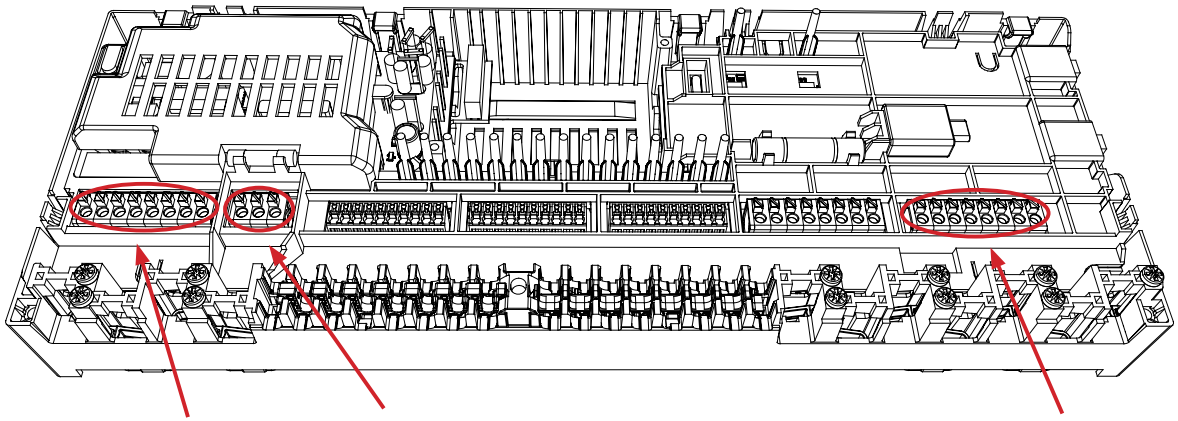

1. AMZ 113 230V
2. 1 set Danfoss Manifold (types FHF or BasicPlus or SSM)
3. Thermal actuators, 230V / *24V** TWA-A
   ** Requires TWA conversion module*
4. Dew Point Sensor CF-DS
5. External switch for manual changeover between heating and cooling

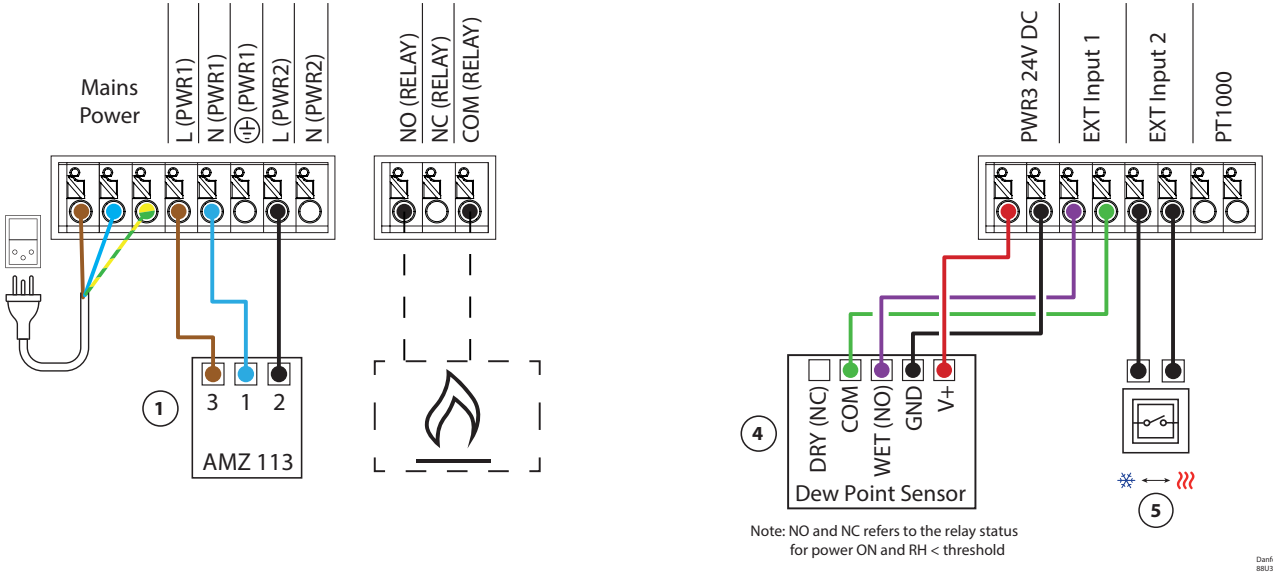

Note: NO and NC refers to the relay status for power ON and RH < threshold

Application **16** *Continued*

Explanation of heating and cooling for end user

No cooling ❄ will occur until the Icon 2 Main Controller is switched to cooling mode via EXT Input 2 and a hysteresis of 2 K above the thermostat's set temperature has been exceeded.

For example, if the thermostat is set to 22 °C, cooling will not start until the room temperature exceeds 24 °C.

The room temperature is never cooled to more than 2 °C above the set temperature. For example, if the temperature is set to 21 °C, the room will be cooled to 23 °C.

Heating ≋ is only activated again when EXT Input 2 is opened again.

Installer App settings

Function	Factory setting	
	Off	On
PWM+ proportional control of actuator outputs		•
Heat pump optimizer – maintenance of minimum flow	•	

Required accessories

1	3-way motorized ball valve 230V AMZ 113 DN20	082G5419
2	Stainless steel floor heating manifold SSM-F, 2–12 groups	088U0752 to 088U0762
	Set of 2 mounting brackets	088U0585
	Set of 2 ball valves 1"	088U0822
3	Thermal actuator TWA-A 230V NC suitable for SSM-F manifold	088H3112
4	Dew point sensor CF-DS	088U0251
5	Wall switch for manual changeover to cooling	External supplier

Notes

Drawings

© Danfoss | Climate Solutions | 2026.09 | 66

Application **17**

3-pipe heating/cooling system with two 2-way control valves with thermal actuators, changeover to cooling based on external potential-free NO contact

Requires an Advanced Main Controller

Application description
In this application, two 2-way motorized control valves are used to change over between heating and cooling modes. The thermal actuator on the 2-way cooling control valve will stay open as long as the system is in cooling mode. The thermal actuator for heating will stay open as long as the system is in heating mode.

Optionally, you can use the 230V pump control PWR1 and RELAY heat source control.

If it is not possible to prevent the supply temperature from dropping below the dew point in cooling mode, it is strongly recommended that you add a dew point sensor. Condensation can result in permanent damage to the floor's construction and finish.

A relay or potential-free contact is connected to input IN2 to control the changeover between heating and cooling modes. When the external contact is closed, the system will change over to cooling mode.

Disabling cooling (Bathroom)
If there is a bathroom with underfloor heating and an Icon2™ room thermostat, you may want to disable cooling for this room. Cooling a bathroom will cause condensation to form on the floor.

There are two ways to disable cooling mode for a room:
1. Using the Installer App on a smartphone
2. Using the installer menu on the thermostat itself
   To do so, set the **ME.7** setting to **OFF**

© Danfoss | Climate Solutions | 2026.09

App 17

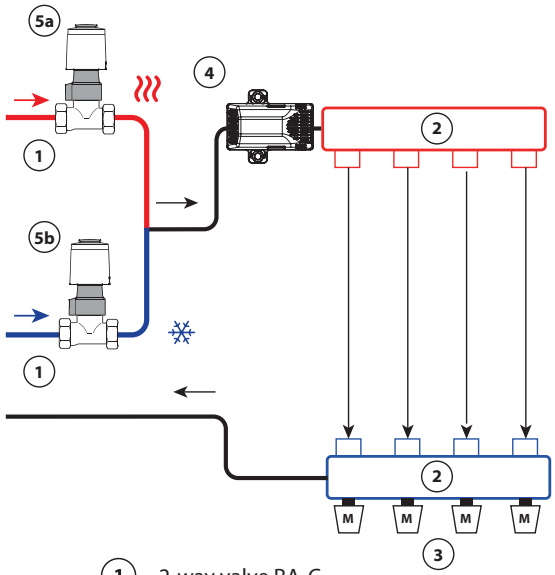

1. 2-way valve RA-C
2. 1 set Danfoss Manifold (types FHF or BasicPlus or SSM)
3. Thermal actuators, 230V / *24V** TWA-A
   ** Requires TWA conversion module*
4. Dew Point Sensor CF-DS
5a. Thermal actuators, 230V / *24V** TWA-A
   ** Requires TWA conversion module*
5b. Thermal actuators, 230V / *24V** TWA-A
   ** Requires TWA conversion module*
6. External switch for manual changeover between heating and cooling

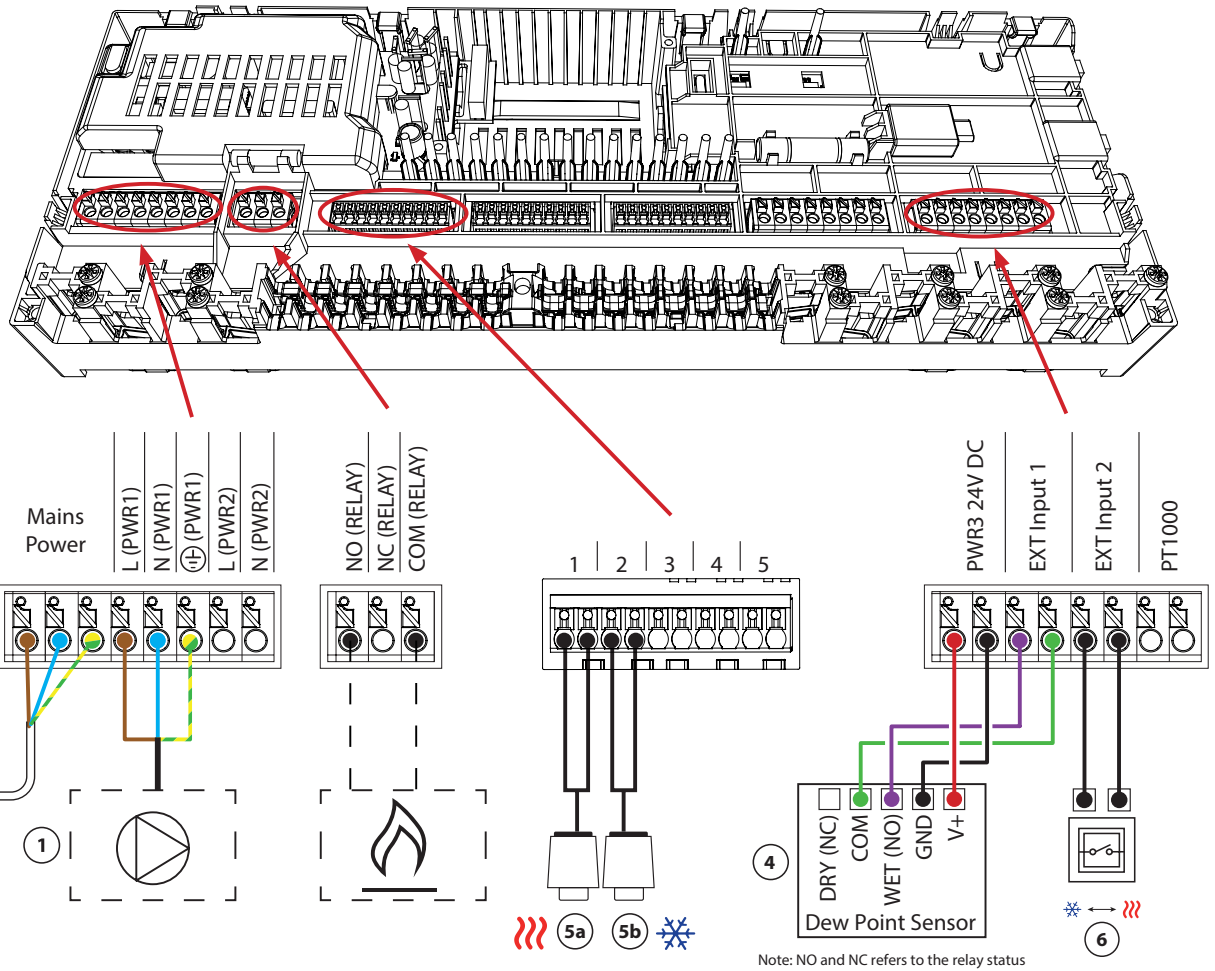

Application **17** *Continued*

Explanation of heating and cooling for end user

No cooling ❄ will occur until the Icon 2 Main Controller is switched to cooling mode via EXT Input 2 and a hysteresis of 2 K above the thermostat's set temperature has been exceeded.

For example, if the thermostat is set to 22 °C, cooling will not start until the room temperature exceeds 24 °C.

The room temperature is never cooled to more than 2 °C above the set temperature. For example, if the temperature is set to 21 °C, the room will be cooled to 23 °C.

Heating ≋ is only activated again when EXT Input 2 is opened again.

Installer App settings

Function	Factory setting	
	Off	On
PWM+ proportional control of actuator outputs		•
Heat pump optimizer – maintenance of minimum flow	•	

Required accessories

1	2-way control valve RA-C DN20	013G3096
	Compression ferrule set 22mm x 1" for RA-C 20	013U0135 (x4)
2	Stainless steel floor heating manifold SSM-F, 2–12 groups	088U0752 to 088U0762
	Set of 2 mounting brackets	088U0585
	Set of 2 ball valves 1"	088U0822
3	Thermal actuator TWA-A 230V NC suitable for SSM-F manifold	088H3112
4	Dew point sensor CF-DS	088U0251
5a/b	Thermal actuator TWA-A 230V NC suitable for RA-C DN20	088H3112 (x2)
6	Wall switch for manual changeover to cooling	External supplier

Notes

Drawings

© Danfoss | Climate Solutions | 2026.09 | 70

Application **18**

3-pipe heating/cooling system with two ball valves with actuators, changeover to cooling based on external potential-free NO contact

Requires an Advanced Main Controller

Application description
In this application, two 230V two-way motorized ball valves are used to change over between heating and cooling modes. The ball valve for cooling will open if one or more rooms require cooling. The ball valve for heating will open if one or more rooms require heating.

If it is not possible to prevent the supply temperature from dropping below the dew point in cooling mode, it is strongly recommended that you add a dew point sensor. Condensation can result in permanent damage to the floor's construction and finish.

A relay or potential-free contact is connected to input IN2 to control the changeover between heating and cooling modes. When the external contact is closed, the system will change over to cooling mode.

Disabling cooling (Bathroom)
If there is a bathroom with underfloor heating and an Icon2™ room thermostat, you may want to disable cooling for this room. Cooling a bathroom will cause condensation to form on the floor.

There are two ways to disable cooling mode for a room:
1. Using the Installer App on a smartphone
2. Using the installer menu on the thermostat itself
   To do so, set the **ME.7** setting to **OFF**

© Danfoss | Climate Solutions | 2026.09 | 71

App 18

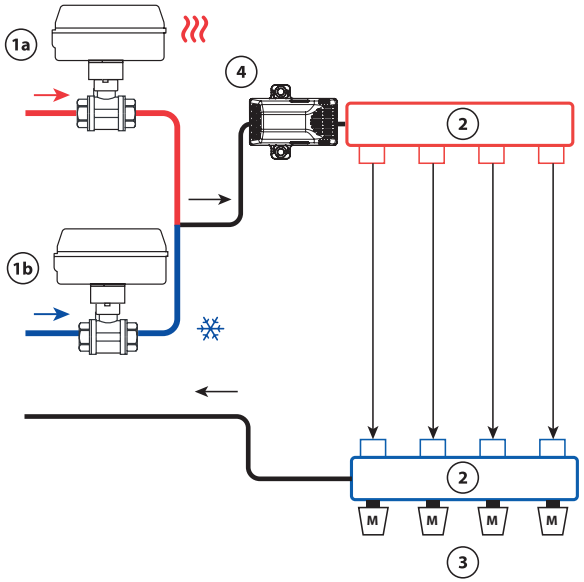

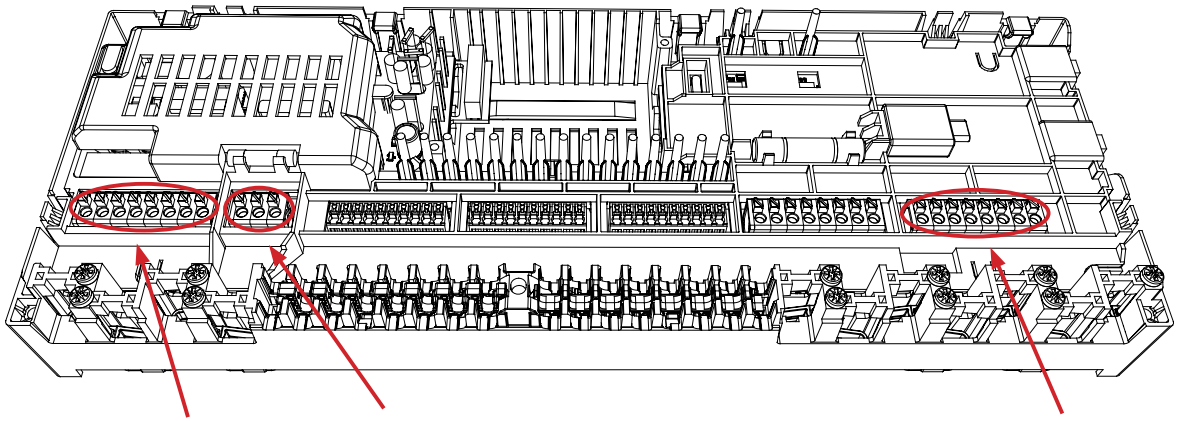

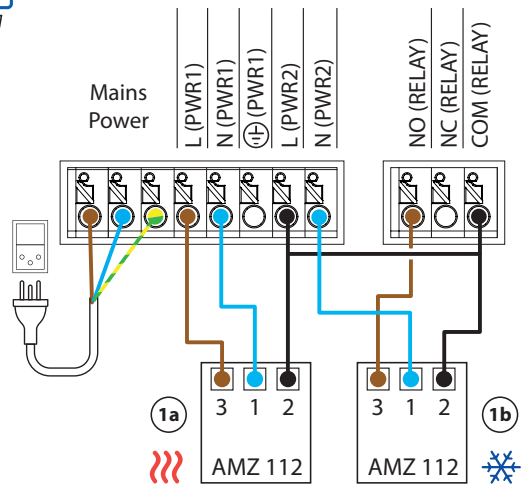

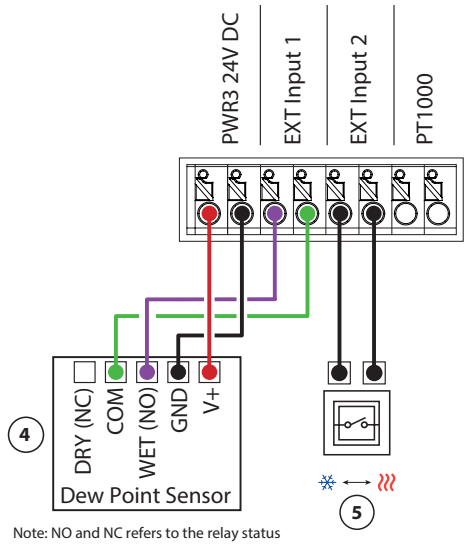

Note: NO and NC refers to the relay status for power ON and RH < threshold

Danfoss 88U33.1

1a AMZ 112 230V

1b AMZ 112 230V

2 1 set Danfoss Manifold (types FHF or BasicPlus or SSM)

3 Thermal actuators, 230V / *24V** TWA-A
** Requires TWA conversion module*

4 Dew Point Sensor CF-DS

5 External switch for manual changeover between heating and cooling

Application **18** *Continued*

Explanation of heating and cooling for end user

No cooling will occur until the Icon 2 Main Controller is switched to cooling mode via EXT Input 2 and a hysteresis of 2 K above the thermostat's set temperature has been exceeded.

For example, if the thermostat is set to 22 °C, cooling will not start until the room temperature exceeds 24 °C.

The room temperature is never cooled to more than 2 °C above the set temperature. For example, if the temperature is set to 21 °C, the room will be cooled to 23 °C.

Heating is only activated again when EXT Input 2 is opened again.

Installer App settings

Function	Factory setting	
	Off	On
PWM+ proportional control of actuator outputs		•
Heat pump optimizer – maintenance of minimum flow	•	

Required accessories

1a/b	2-way motorized ball valve 230V AMZ 112 DN20	082G5407
2	Stainless steel floor heating manifold SSM-F, 2–12 groups	088U0752 to 088U0762
	Set of 2 mounting brackets	088U0585
	Set of 2 ball valves 1"	088U0822
3	Thermal actuator TWA-A 230V NC suitable for SSM-F manifold	088H3112
4	Dew point sensor CF-DS	088U0251
5	Wall switch for manual changeover to cooling	External supplier

Notes

Drawings

© Danfoss | Climate Solutions | 2026.09 | 74

Application **19**

4-pipe heating/cooling system with 6-way motorized ball valve, changeover to cooling based on external potential-free NO contact

Requires an Advanced Main Controller

Application description
In this application, a 230V 6-way motorized ball valve is used to change over between heating and cooling modes.

The RELAY activates when the system is in heating mode and is used to control the 6-way ball valve. The PWR1 output is active in both heating and cooling mode. It can optionally be used to operate a 230V 2-way control valve. This acts as an additional shut-off valve when there is no need for heat or cooling, reducing unnecessary consumption.

If it is not possible to prevent the supply temperature from dropping below the dew point in cooling mode, it is strongly recommended that you add a dew point sensor. Condensation can result in permanent damage to the floor's construction and finish.

A relay or potential-free contact is connected to input IN2 to control the changeover between heating and cooling modes. When the external contact is closed, the system will change over to cooling mode.

Disabling cooling (Bathroom)
If there is a bathroom with underfloor heating and an Icon2™ room thermostat, you may want to disable cooling for this room. Cooling a bathroom will cause condensation to form on the floor.

There are two ways to disable cooling mode for a room:
1. Using the Installer App on a smartphone
2. Using the installer menu on the thermostat itself
   To do so, set the **ME.7** setting to **OFF**

© Danfoss | Climate Solutions | 2026.09

App 19

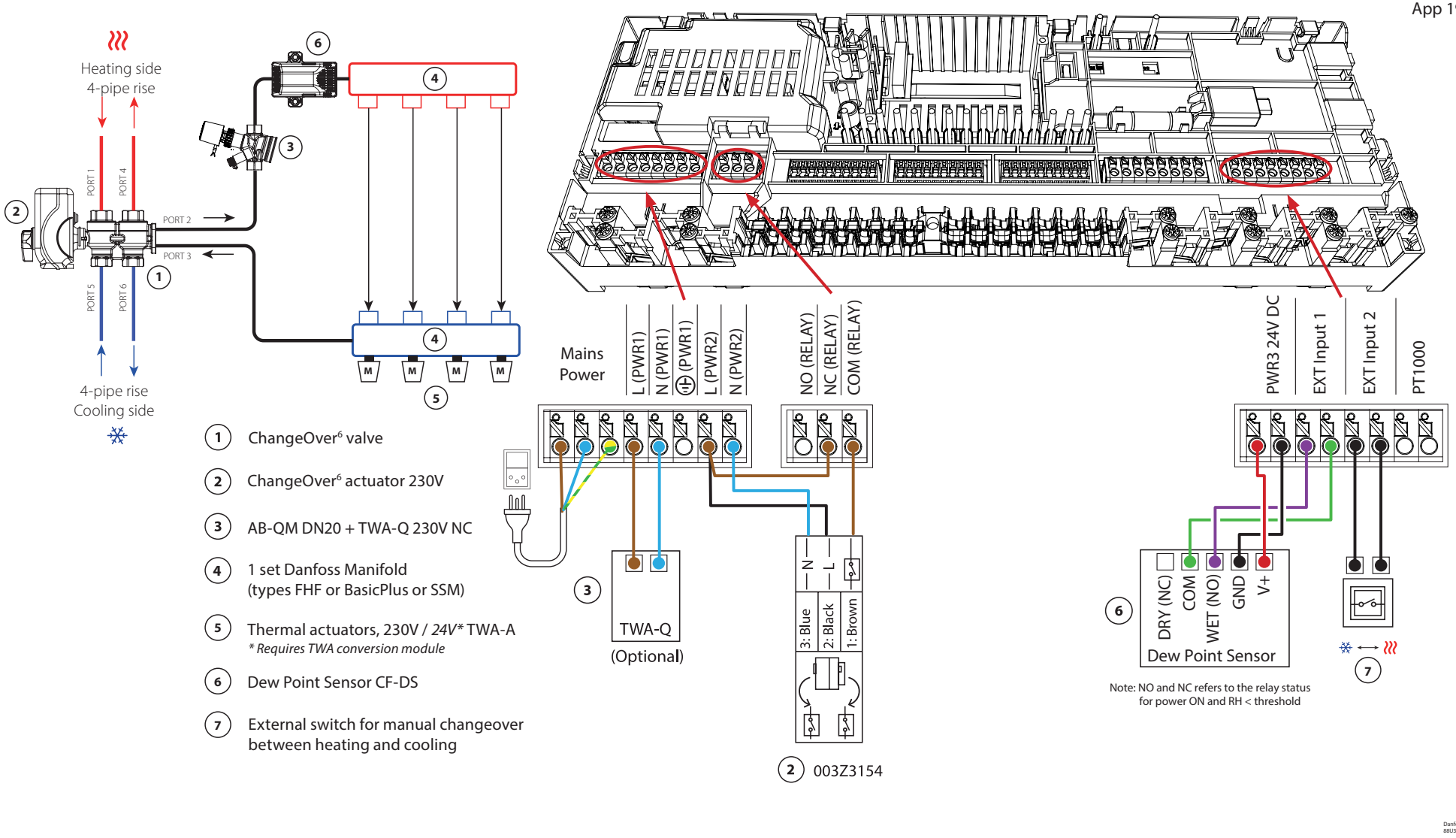

1. ChangeOver[6] valve
2. ChangeOver[6] actuator 230V
3. AB-QM DN20 + TWA-Q 230V NC
4. 1 set Danfoss Manifold (types FHF or BasicPlus or SSM)
5. Thermal actuators, 230V / *24V** TWA-A
   ** Requires TWA conversion module*
6. Dew Point Sensor CF-DS
7. External switch for manual changeover between heating and cooling

Application **19** *Continued*

Explanation of heating and cooling for end user

No cooling ❄ will occur until the Icon 2 Main Controller is switched to cooling mode via EXT Input 2 and a hysteresis of 2 K above the thermostat's set temperature has been exceeded.

For example, if the thermostat is set to 22 °C, cooling will not start until the room temperature exceeds 24 °C.

The room temperature is never cooled to more than 2 °C above the set temperature. For example, if the temperature is set to 21 °C, the room will be cooled to 23 °C.

Heating ≋ is only activated again when EXT Input 2 is opened again.

Installer App settings

Function	Factory setting	
	Off	On
PWM+ proportional control of actuator outputs		•
Heat pump optimizer – maintenance of minimum flow	•	

Required accessories

1	6-way ball valve ChangeOver6 DN20	003Z3151
2	Actuator 230V suitable for ChangeOver6 DN20	003Z3154
3	2-way control valve with flow regulator AB-QM DN20	003Z8203
	Thermal actuator TWA-Q 230V NC suitable for AB-QM DN20	082F1600
	Threaded fittings R3/4" suitable for AB-QM DN20	003Z0233 (x2)
4	Stainless steel floor heating manifold SSM-F, 2–12 groups	088U0752 to 088U0762
	Set of 2 mounting brackets	088U0585
	Set of 2 ball valves 1"	088U0822
5	Thermal actuator TWA-A 230V NC suitable for SSM-F manifold	088H3112
6	Dew point sensor CF-DS	088U0251
7	Wall switch for manual changeover to cooling	External supplier

© Danfoss | Climate Solutions | 2026.09 | 77

Notes

Drawings

© Danfoss | Climate Solutions | 2026.09 | 78

Application **20**

4-pipe heating/cooling system with four 2-way control valves with thermal actuators, changeover to cooling based on external potential-free NO contact

Requires an Advanced Main Controller

Application description
In this application, four 2-way motorized control valves are used to change over between heating and cooling modes. The thermal actuators on the 2-way control valves for cooling will stay open as long as the system is in cooling mode. The thermal actuators for heating will be open as long as the system is in heating mode.

Optionally, you can use the 230V pump control PWR1 and RELAY heat source control.

If it is not possible to prevent the supply temperature from dropping below the dew point in cooling mode, it is strongly recommended that you add a dew point sensor. Condensation can result in permanent damage to the floor's construction and finish.

A relay or potential-free contact is connected to input IN2 to control the changeover between heating and cooling modes. When the external contact is closed, the system will change over to cooling mode.

Disabling cooling (Bathroom)
If there is a bathroom with underfloor heating and an Icon2™ room thermostat, you may want to disable cooling for this room. Cooling a bathroom will cause condensation to form on the floor.

There are two ways to disable cooling mode for a room:
1. Using the Installer App on a smartphone
2. Using the installer menu on the thermostat itself
   To do so, set the **ME.7** setting to **OFF**

© Danfoss | Climate Solutions | 2026.09

App 20

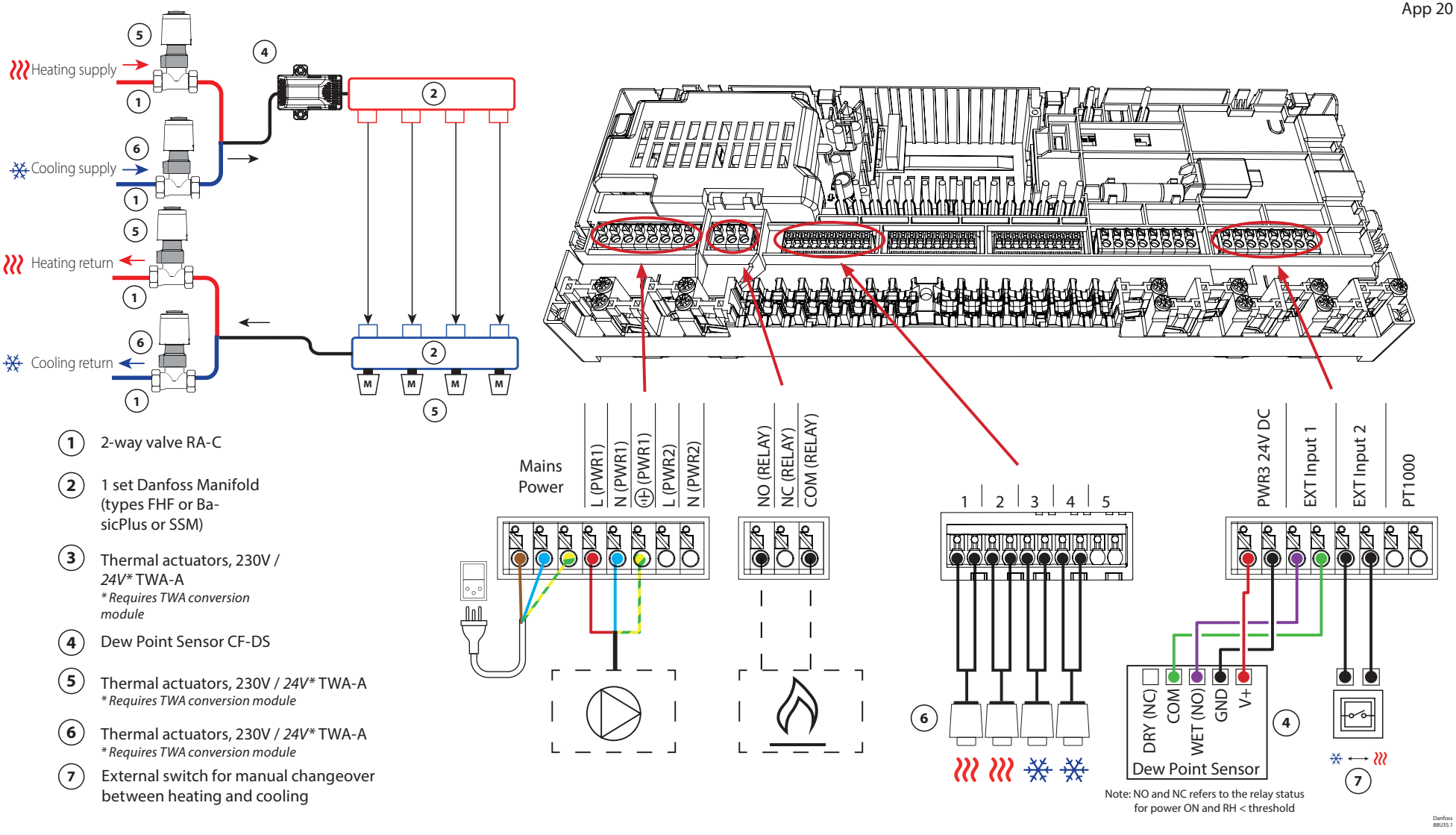

1. 2-way valve RA-C
2. 1 set Danfoss Manifold (types FHF or BasicPlus or SSM)
3. Thermal actuators, 230V / *24V** TWA-A
   ** Requires TWA conversion module*
4. Dew Point Sensor CF-DS
5. Thermal actuators, 230V / *24V** TWA-A
   ** Requires TWA conversion module*
6. Thermal actuators, 230V / *24V** TWA-A
   ** Requires TWA conversion module*
7. External switch for manual changeover between heating and cooling

Application **20** *Continued*

Explanation of heating and cooling for end user

No cooling will occur until the Icon 2 Main Controller is switched to cooling mode via EXT Input 2 and a hysteresis of 2 K above the thermostat's set temperature has been exceeded.

For example, if the thermostat is set to 22 °C, cooling will not start until the room temperature exceeds 24 °C.

The room temperature is never cooled to more than 2 °C above the set temperature. For example, if the temperature is set to 21 °C, the room will be cooled to 23 °C.

Heating is only activated again when EXT Input 2 is opened again.

Installer App settings

Function	Factory setting	
	Off	On
PWM+ proportional control of actuator outputs		•
Heat pump optimizer – maintenance of minimum flow	•	

Required accessories

1	2-way control valve RA-C DN20	013G3096
	Compression ferrule set 22mm x 1" for RA-C 20	013U0135 (x8)
2	Stainless steel floor heating manifold SSM-F, 2–12 groups	088U0752 to 088U0762
	Set of 2 mounting brackets	088U0585
	Set of 2 ball valves 1"	088U0822
3	Thermal actuator TWA-A 230V NC suitable for SSM-F manifold	088H3112
4	Dew point sensor CF-DS	088U0251
5	Thermal actuator TWA-A 230V NC suitable for SSM-F manifold	088H3112
6	Thermal actuator TWA-A 230V NC suitable for RA-C DN20	088H3112 (x4)
7	Wall switch for manual changeover to cooling	External supplier

© Danfoss | Climate Solutions | 2026.09 | 81

Trouble shooting

Re-pairing or replacing a device

When to reset a thermostat

You may reset a thermostat if you want to remove it from the system.

This can be the case when:
- The actuator outputs were paired incorrectly
OR
- The entire system requires resetting

1. Activate the thermostat by pressing on the screen.
2. Use both thumbs to press the temperature adjustment arrow keys ∧∨ until dEL ALL appears, as shown in the adjacent image.
3. Press the '✓' checkmark next to 'dEL ALL'.
   The thermostat has now been removed from the system.

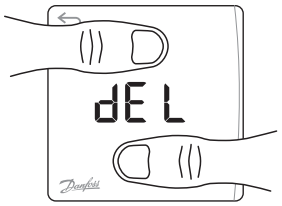

Reset of Icon2 Sensor is done using the same method as for the RT and Featured RT but neither dEL ALL or arrows will be visible. Instead the lost connected and low battery indication will be flashing.

When to reset the Main Controller

Reset the Main Controller to return to the factory settings.
This will cause all data to be deleted. Do this if you want to recommission the installation.

If you reset the Main Controller, you will also need to reset all linked thermostats and any App or Zigbee modules.
This is necessary to be able to pair these devices again.

Hold down '>' and the 'OK' button until both LEDs start flashing blue (10 sec), then release the buttons immediately. If you release after 2 sec then the Main Controller will perform a simple restart.

What to do if the thermostat cannot be reset

If a wireless thermostat was reset without the Main controller being plugged into an outlet or in case of a faulty thermostat, you can use the Icon2™ App to clear the actuator outputs.

Procedure
Once you are within Bluetooth range of the regulator, start up the Icon2™ App.

Choose:

1. 'Connect to existing system.'

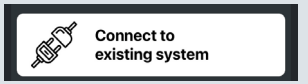

2. Once a connection has been made, select 'Room Overview.'

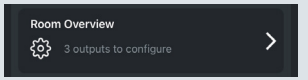

3. Select one of the thermal actuators that require clearing.

4. Press the three dots at the top right on the thermostat.

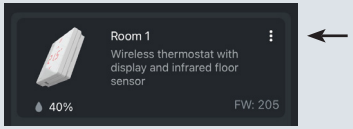

5. Select 'Remove thermostat'.
   You can now reassign the actuator outputs.

How to disconnect from Ally Gateway

This is normally done from the Ally App, but it can become necessary to disconnect the Icon2 Main Controller from Ally Gateway manually (or any other ZigBee coordinator it is connected to).
This can be needed if a replacement Ally Gateway is installed, without the Main Controller being disconnected properly from the previous first. Like in situations where the home changes owner.
Hold down '>' for 15 seconds, and notice the left LED blink, then release immediately. Both LEDs will then be constant red, while all the outputs will light up in a running pattern.
Once the process is complete, the left LED will be off and the right with show Green.

© Danfoss | Climate Solutions | 2026.09 | 82

UI Blinking pattern for Icon2™ Main Controller

1(>)	2(OK)	Actuator outputs	
●	●	●	Power On and ready
☼	●	●	Bluetooth activated
●	●	●	Bluetooth connected to Icon2 App
●	☼	●	Main controller is being updated via Icon2 App
○	●	●	Power On + Connected to Ally Gateway
○	☼	●	Sending room thermostats to Ally Gateway
○	☼	●	Main controller is being updated via Ally Gateway
☼	☼	●	Lost connection to Ally™ Gateway
☼	●	●	Main controller is ready to be paired with other main controller
☼	○	●	Secondary controller is being updated by the Primary controller, do not restart!
☼	☼	●	Alarm, please connect with Icon2 App
●	●	●	Secondary MC powered on and connected to Primary MC
☼	☼	●	Firmware update from Primary MC ongoing
●	●	●	Main Controller is in mechanical installation mode
●	●	●	Main controller is in manual installation mode and ready to assign RT's
●	☼	●	No actuator outputs available for installation
●	☼	●	Lost connection to RT
☼	☼	●	Error on actuator for supply temperature
☼	☼	●	Error on actuator for room output
●	●	●	Main controller has been factory reset
☼	☼	●	

Action not allowed

- Main Controller cannot try to join Ally Gateway before room thermostats are connected to MC.
- Main Controller is configured as Single MC, cannot be added as Secondary MC in Multi MC. It should instead be factory reset first.
- Main Controller is configured as Secondary MC in Multi MC, and user clicked '>' button. Action only possible on Primary MC.

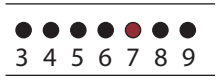

Actuator output is dimming because:
- Valve is being exercised
- It is being used to offload excess energy from heat pump



Update of the core software layer.
IMPORTANT; device should not be restarted now!



Need more help?
Download the App

Extending the **wireless range**

A wireless signal gets weaker as it travels. Metal surfaces and metal in constructions in particular can block the signal. The Danfoss Zigbee repeater can help you improve your thermostats' connection. If the Icon2™ Main Controller is installed in an enclosure, you can add an external antenna.

Description:
Danfoss Icon2™ Zigbee Repeater

Part number:
088U1131



Description:
Danfoss Icon2™ External Antenna

Part number:
088U2141



The external antenna should be used to obtain a better location for communication with other devices, this will typically be needed when the Main Controller is placed inside metal cabinets, or very close to other metal appliances.

See guidelines for max. wireless range and troubleshooting on page 85 for further information



In case the Icon2 main controller is mounted in a location which will require an external antenna for radio communication with it's sub devices, then connect it to here.

Guideline **for wireless products**

Max. wireless range

Obstacles reduce the signal

Light walls (wood/gypsum/insulation) give little resistance

Medium walls (normal brick masonry) give some resistance

Heavy walls (concrete or thick stone walls) gives significant resistance
Metallic heat distribution plates or other metallic appliances will have a negative impact on the range

Network test

No Connection

Bad

Weak

Good

Better

Best

For Wired 24v Room thermostats:

OK

Wire problem

Note: Network test can be performed from Icon2 commissioning App or on RT in menu 3.

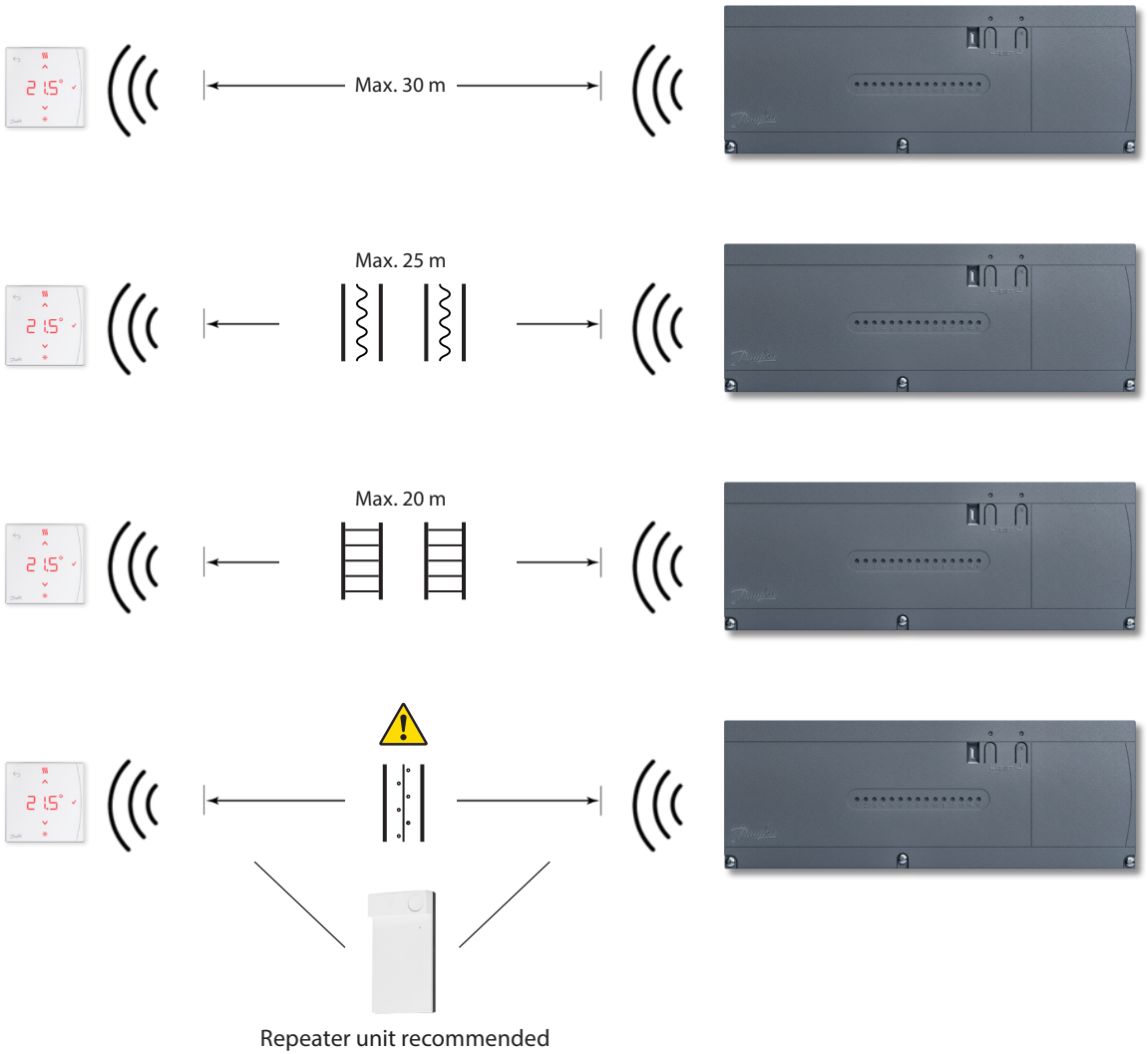

When to consider using **a repeater?**

Wireless signals can be disturbed or reduced by different materials or material thicknesses and should be considered when planning a wireless system.

Typical obstacles include:

- Reinforced walls (concrete)
- Aluminum foil
- Mirrors
- Furnace, ventilation, and similar equipment.
- Refrigerator, freezer, and other household appliances.

The intention with a repeater is to extend and reroute the wireless signal in problematic situations.

Most houses and apartments will not require repeaters.

If you have made a system with 2 - 4 main controllers (also know as 'Multi MC'), then the Secondary controllers will also repeat the wireless signals.

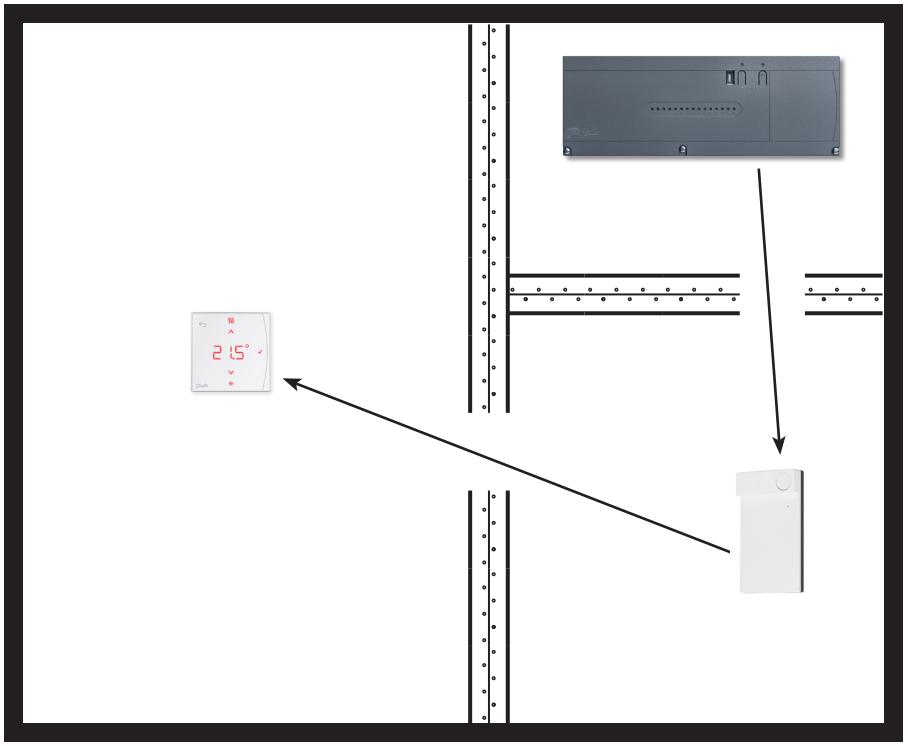

Icon2™ RT operation and maintenance

Menu structure

Danfoss Icon2™ RT and Icon2™ Featured RT

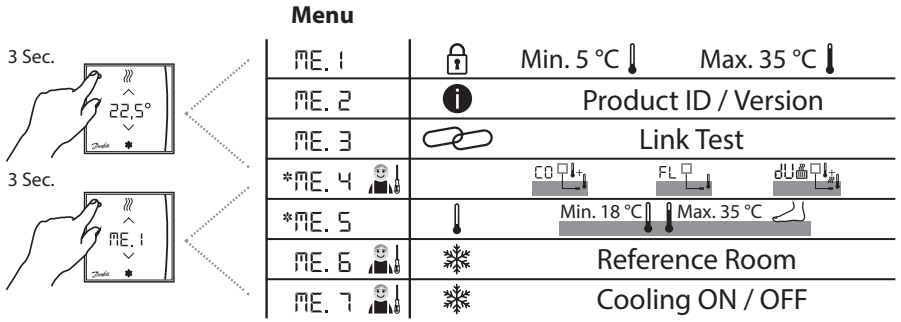

*Only Danfoss Icon2 Featured RT

Danfoss Icon2™ Sensor

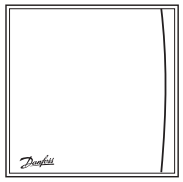

No menu

Remove and recycle batteries

Only use 1,5V AAA Alkaline

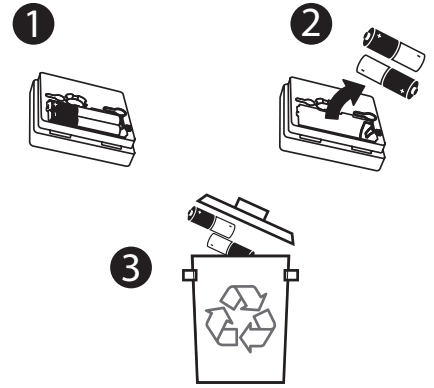

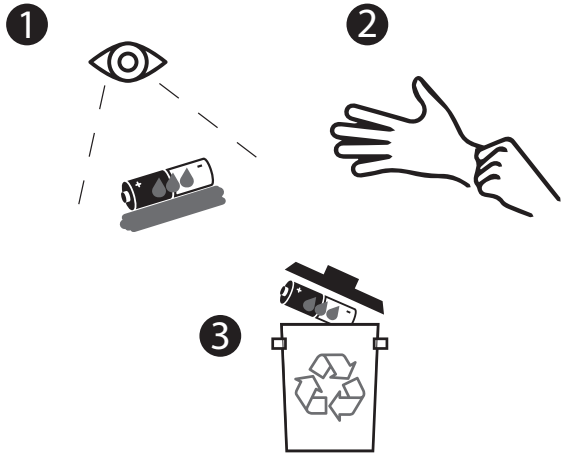

RT / Sensor placement

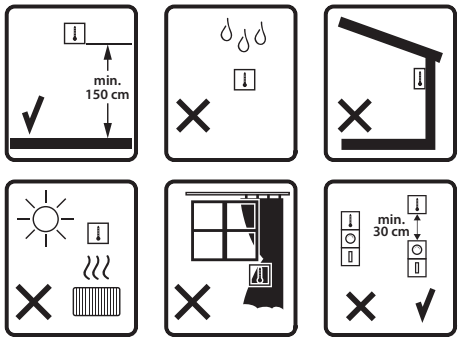

Mounting and inclusion

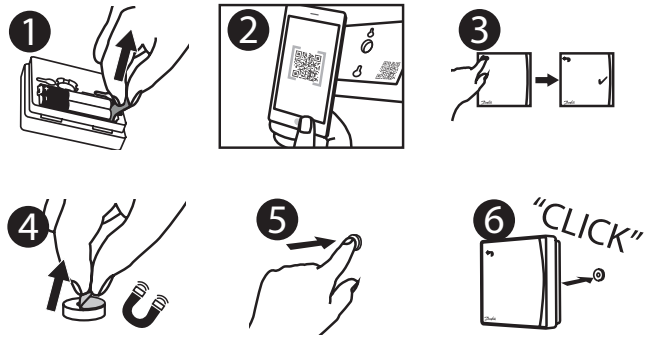

© Danfoss | Climate Solutions | 2026.09 | 87

Icon2™ Main Controller overview

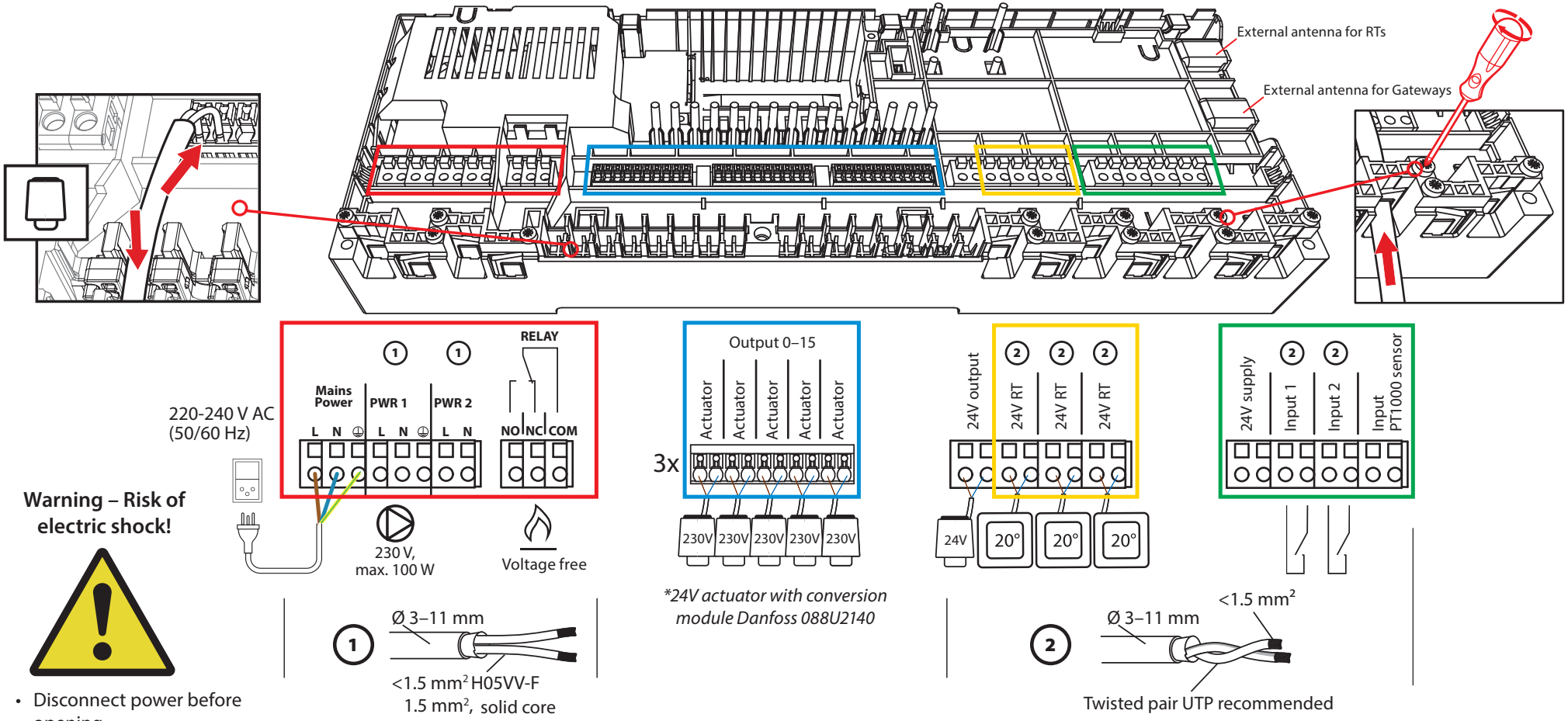

Warning – Risk of electric shock!

- Disconnect power before opening
- This appliance must be connected to an earthing terminal

© Danfoss | Climate Solutions | 2026.09 | 88

Notes

Drawings

© Danfoss | Climate Solutions | 2026.09 | 89

ENGINEERING
TOMORROW

Danfoss A/S
Climate Solutions • danfoss.com • +45 7488 2222

Any information, including, but not limited to information on selection of product, its application or use, product design, weight, dimensions, capacity or any other technical data in product manuals, catalogues descriptions, advertisements, etc. and whether made available in writing, orally, electronically, online or via download, shall be considered informative, and is only binding if and to the extent, explicit reference is made in a quotation or order confirmation. Danfoss cannot accept any responsibility for possible errors in catalogues, brochures, videos and other material. Danfoss reserves the right to alter its products without notice. This also applies to products ordered but not delivered provided that such alterations can be made without changes to form, fit or function of the product.
All trademarks in this material are property of Danfoss A/S or Danfoss group companies. Danfoss and the Danfoss logo are trademarks of Danfoss A/S. All rights reserved.

AB432956914381en-010703

© Danfoss | Climate Solutions | 2026.09