

DANFOSS STANDARD
MCHE PRODUCTS



TABLE OF CONTENT

INNOVATIVE DESIGN 3

ADVANTAGES – COMPARISON WITH F&T HX 4

STAY SAFE WITH OUR STANDARD 5

YOUR DEMAND – OUR SUPPLY 6

ORDERING IS EASY 7

ANTI-CORROSION TECHNOLOGY 8

DANFOSS STANDARD CATALOGUE 9

CONDENSER WORKING CONDITIONS 10

D1000-C CONDENSER COIL 11

D1100-C CONDENSER COIL 13

D1200-C CONDENSER COIL 15

D1300-C CONDENSER COIL 17

D1400-C CONDENSER COIL 19

D1500-C CONDENSER COIL 21

D1600-C CONDENSER COIL 23

D1700-C CONDENSER COIL 25

D1800-C CONDENSER COIL 27

D1900-C CONDENSER COIL 29

D2000-C CONDENSER COIL 31

D2100-C CONDENSER COIL 33

D2200-C CONDENSER COIL 35

D2300-C CONDENSER COIL 37

D2400-R FREECOOLING COIL 39

D2500-R FREECOOLING COIL 40

INNOVATIVE DESIGN

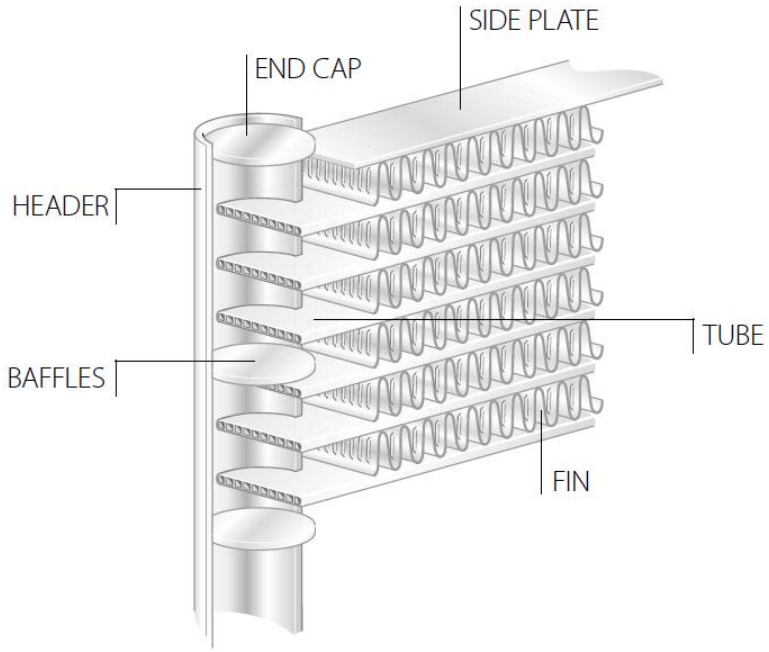

MCHEs have an ingeniously simple design - made entirely of all aluminum which is not only light weight but also prevents galvanic corrosion. The refrigerant-carrying tubes are formed to optimize heat transfer, thus enabling the production of more compact, but equally effective cooling solutions. Meanwhile, their smart louvered fin design maximizes surface contact, successfully reducing the air-side pressure loss, improving efficiency and reducing noise levels.

TUBE	The ingenious design of the tubes gives superior heat transfer, which in turn enables a more compact but equally effective solution overall.
FIN	A superior louvred fin design maximizes the surface contact. This reduces the air-side pressure loss and improves efficiency, as well as reducing noise levels.
HEADER	In combination with baffles, MCHE headers control the flow of refrigerant and enable optimization of the velo- city in all phases.
BAFFLE	In combination with headers, MCHE baffles control the flow of refrigerant and enable optimization of the velo- city in all phases.
END CAP	The end cap and the main body of the MCHE are brazed together to form one leak-free stable unit. Being made entirely of aluminum, the whole heat exchanger (including the end cap) is resistant to galvanic
SIDE PLATE	The side plates are used to protect the tube from being destroyed by external force and some codes are formed in a way that facilitates installation using U-bars.

ADVANTAGES – COMPARISON WITH F&T HX

1. **Greater refrigerant-side heat transfer efficiency**
2. **Greater air-side heat transfer efficiency**
3. **Lower hold-up volumes and refrigerant charge**
4. **Compact design and light weight**
5. **Better corrosion characteristic**
6. **Lower noise levels**
7. **Brazed tube to fin joint**
8. **Easy cleaning**

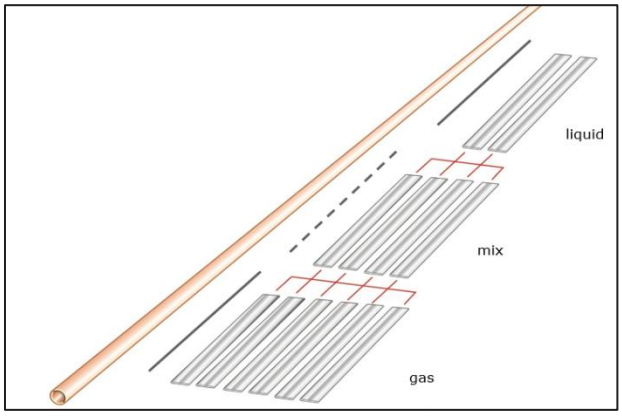

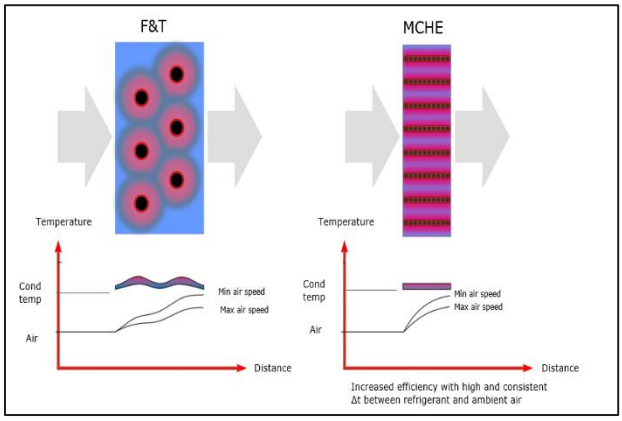

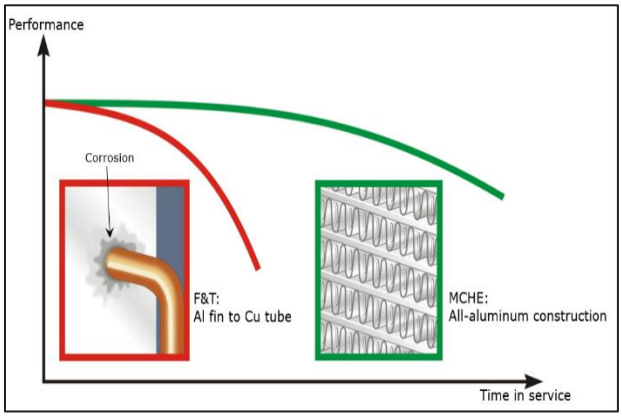

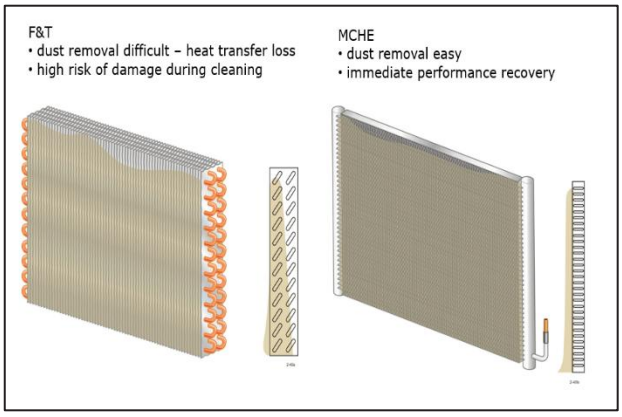

STAY SAFE WITH OUR STANDARD





EASY FOR YOU

A quiet revolution is underway in the world of cooling. The introduction of MCHE condensers, which combine resource and energy efficiency with minimal use of refrigerants, is enabling the development of leaner, greener solutions. Understandably, MCHEs are in demand! Yet most MCHE suppliers today require a minimum order volume. What happens if you only need a few condensers, for example to try out in a prototype product or to fulfil a customized order of your own? With our

THE SELECTED RANGE FOR COMMON APPLICATIONS

Select one of our standard MCHE products, which are optimized for specific applications, and you can buy any quantity of condensers, any time, large or small. Our factories are set up to produce a range of different application - specific MCHEs, which you can adjust to meet essential requirements with a minimum of effort.

THE SIMPLE GUIDE

Our standard products are adapted for use in the areas below (see details on page 4). Select which area is most relevant to your business, choose the desired size of condenser and the capacity in kilowatts required...then simply place your order. With logistics centers in the US, Denmark and China, and manufacturing in China and Mexico we offer fast deliveries to any country or region.

ENTIRETY

Draw on our broad experience of both the HVAC and refrigeration businesses. Our customers benefit from this knowledge in the form of superior heat exchanger products which enable the production of leaner, greener cooling systems. And we willingly share our expertise with MCHE customers around the world!

YOUR DEMAND – OUR SUPPLY



By greatly enhancing both efficiency and environmental performance, Microchannel heat exchangers are completely changing the way we look at things. Choose from a range of standard products which give optimal results in your cooling

CHILLERS MCHEs have a 70% lower refrigerant charge than F&T coils. When an MCHE is used as your condenser, this leads to significantly more environmentally friendly systems. As a manufacturer, that means you can meet legal regulations, get environ- mental certification and take advantage of 'green' tax incentives.

CONDENSING UNITS MCHEs' excellent heat transfer raises the efficiency of your products, making it possible to build a high-performance range with a slimmer design (using the same frontal area). With compact, energy-efficient products, you save on material, transport and storage costs. At the same time, you increase the attractiveness of your offering to

INDOOR DISPLAYS/ICE MACHINES In retail outlets for chilled food and drinks, every centimeter counts. Building cabinets with compact, efficient MCHEs lets you maximize the space available for product display while minimizing the mechanical space requirement. Similarly, MCHEs enable a slimmer design for ice machines used in hotels or restaurants, where space is also at a premium.

RESIDENTIAL AC MCHEs have a lower air side pressure loss than F&T coils, which means they function more quietly - as well as consuming less fan power. This is obviously a major advantage in residential applications and ensures that as a manufacturer you are able to meet local market regulations with regard to noise levels. In addition, their 70% reduced refrigerant charge enables the design of more environmentally friendly AC systems.

AIR DRYERS When MCHEs are used in air dryers, their high efficiency and compact nature let you reach out to new customers. MCHEs offer both lower energy consumption and lower refrigerant charge, so you can develop cost-effective solutions with a strong environmental profile.

CABINET COOLING Safeguard your customers' most sensitive technologies with our innovative, reliable MCHEs. Their excellent heat transfer lets you produce compact, energy-efficient units. Combined with a low hold-up volume and reduced refrigerant charge, this also means a significant reduction in CO_2 footprint.

COMMERCIAL SPLIT/ROOF TOPS MCHEs offer several major advantages over traditional heat exchanger technologies. Their 70% lower refrigerant charge makes your systems more cost-effective to produce and own and reduces environmental impacts. In addition, systems using MCHEs weigh a lot less, which can make a big difference when positioning the unit on a roof top.

ORDERING IS EASY

01 Choose your



02 Define required

03 Order from

The whole idea of developing standard product ranges is to help your business move swiftly and smoothly into the MCHE future. Our ready-made, optimized heat exchanger solutions help you speed up product development and streamline production. If you have any queries, please feel free to contact us and we will help you choose a product that's most suitable for your business.

PERFORMANCE GUARANTEED

When you choose a new kind of heat exchanger for your application, you want to be sure it will perform smoothly. That's why, at our factories, we use every tool at our disposal to guarantee efficiency, quality, and ultimately the reliability of the product we deliver to you.

QUALITY ASSURED

In the production of MCHEs, we have adopted the high-quality standards of the automotive industry. Every step in the production chain is quality-certified with ISO 9001 and IATF16949. All the external parts used in our products are approved by third parties such as PED and UL

ANTI-CORROSION TECHNOLOGY

E-coating solution

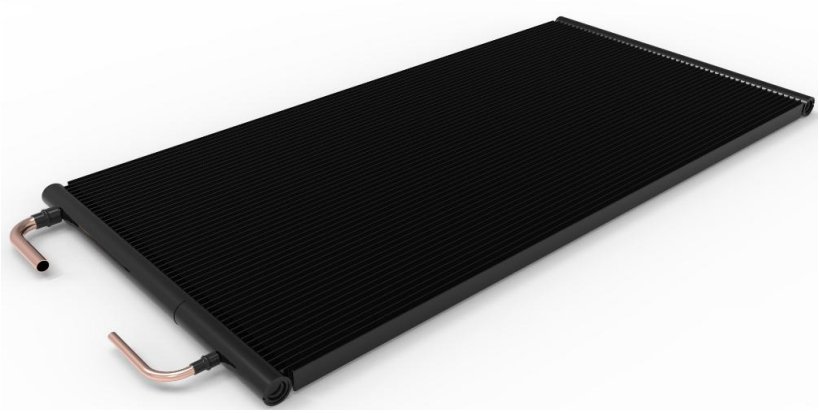

Electrostatically applied epoxy coating, an effective anticorrosion solution for exposed to corrosive environment. Use with a compatible topcoat to prevent ultraviolet (UV) irradiation from decomposing the polymer's molecular chains, Features as follows:

1 A uniform coating thickness can be readily applied to surface under well controlled direct current parameters, average film thickness is 12um-45um.

2 All exposed surfaces including fin edges and confined louvers can 100% covered by coating.

3 Less than 3% degradation on thermal performance compared with bare coil.

4 Color of both E-coating and UV coat layer is black.

5 High physical stability and chemical durability under conditions such as handing, packing, transportation, installation and servicing.

DANFOSS STANDARD CATALOGUE

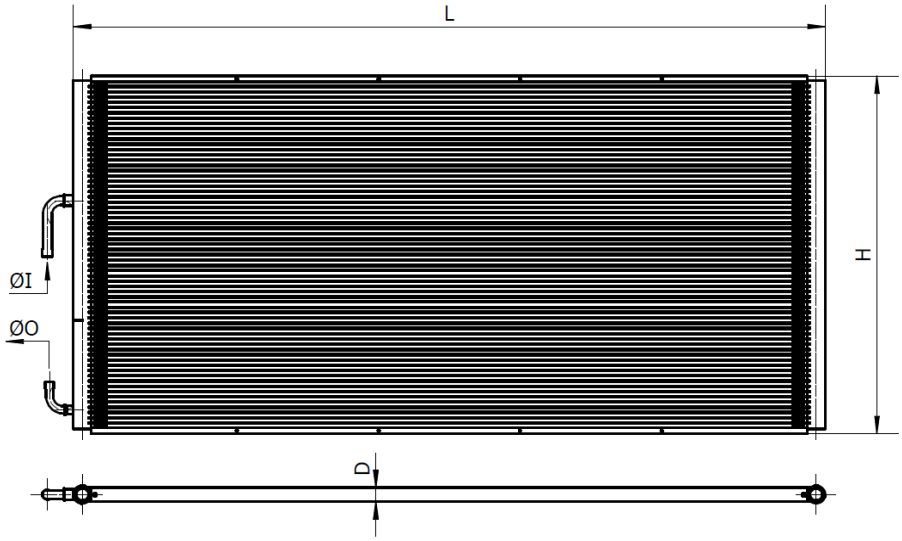

Standard Type	Total Length (L) (mm/in)	Total Height (H) (mm/in)	Tube Width (D) (mm/in)	Inlet ID (ΦI) (mm/in)	Outlet ID (ΦO) (mm/in)	Coil Weight (KG/LB)	Page
D1000-C	332/13.07	300.7/11.84	16/0.63	6.15/0.24	6.15/0.24	0.82/1.81	12
D1100-C	387/15.24	347.7/13.69	16/0.63	6.15/0.24	6.15/0.24	1.08/2.37	14
D1200-C	462/18.19	432.3/17.02	16/0.63	8.2/0.32	6.15/0.24	1.54/3.40	16
D1300-C	552/21.73	516.9/20.35	16/0.63	9.7/0.38	8.2/0.32	2.15/4.75	18
D1400-C	800/31.5	770.7/30.34	16/0.63	9.7/0.38	9.7/0.38	4.51/9.94	20
D1500-C	1074/42.28	516.9/20.35	25.4/1	12.9/0.51	12.9/0.51	6.57/14.49	22
D1600-C	1300/51.18	639.1/25.16	16/0.63	12.9/0.51	12.9/0.51	5.98/13.18	24
D1700-C	1324/52.13	639.1/25.16	25.4/1	16.1/0.63	12.9/0.51	9.87/21.75	26
D1800-C	1074/42.28	1212.5/47.74	25.4/1	22.4/0.88	22.4/0.88	15.28/33.70	28
D1900-C	1274/50.16	1362.9/53.66	25.4/1	22.4/0.88	22.4/0.88	20.08/44.27	30
D2000-C	2000/78.74	1058.3/41.67	25.4/1	25.4/1(OD)	22.4/0.88	26.28/57.93	32
D2100-C	332/13.07	240/9.45	16/0.63	6.15/0.24	6.15/0.24	0.64/1.41	34
D2200-C	552/21.73	240/9.45	16/0.63	6.15/0.24	6.15/0.24	1.00/2.21	36
D2300-C	802/31.57	240/9.45	16/0.63	9.7/0.38	8.2/0.32	1.39/3.07	38
D2400-R	1998.5/78.7	1025.9/40.4	32/1.26	DN32	DN32	25.2/55.5	40
D2500-R	1998.5/78.7	1025.9/40.4	32/1.26	32/1.26	32/1.26	25.2/55.5	41

CONDENSER WORKING CONDITIONS

Working Conditions	Units	Contents
Typical Refrigerant Application	/	R410A/R134a/ R404A/R407C R290/R454B
Inlet Air Temperature	℃/℉	35/95
Inlet Relative Humidity	%	50
Sub Cooling	K	4
Variable1: (△T=10K/18℉)		
Condensing temperature	℃/℉	45/113
Inlet Refrigerant temperature	℃/℉	75/167
Variable1: (△T=15K/27℉)		
Condensing temperature	℃/℉	50/122
Inlet Refrigerant temperature	℃/℉	80/176
Variable1: (△T=20K/36℉)		
Condensing temperature	℃/℉	55/131
Inlet Refrigerant temperature	℃/℉	85/185
Variable1: (△T=25K/45℉)		
Condensing temperature	℃/℉	60/140
Inlet Refrigerant temperature	℃/℉	90/194
Variable2: (Air Velocity)	（m/s） / (ft/min)	1.0/197 1.5/295 2.0/394 2.5/492 3.0/591

Remarks: △T= Condensing Temp. – Inlet Air Temp.

D1000-C CONDENSER COIL

Micro-Channel Heat Exchanger

Dimensional Drawing

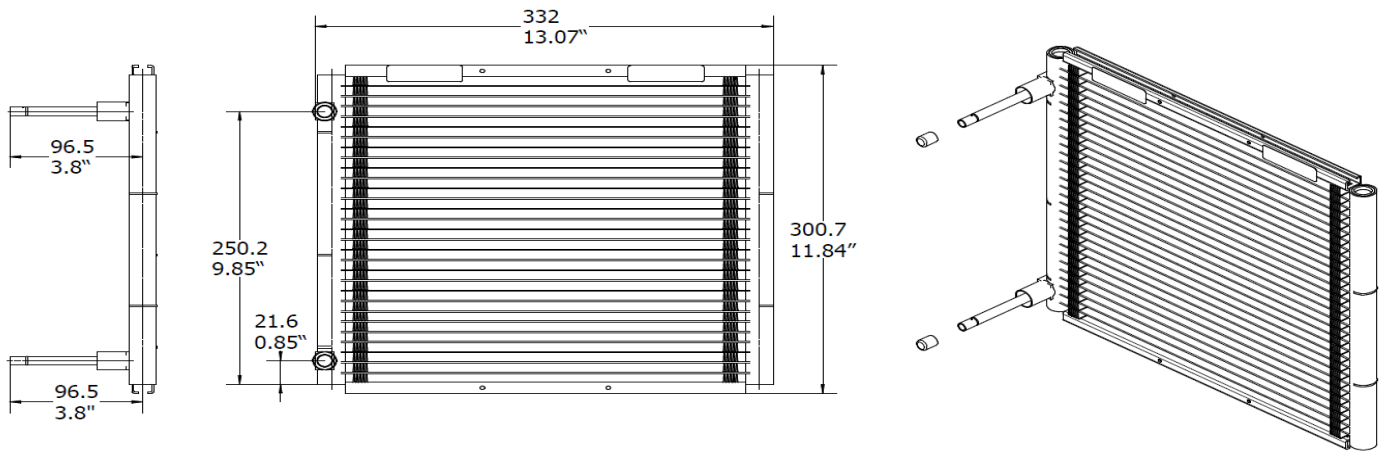

Parameters Table

Model Type	D1000-C	Platform	C116-23FPI
Coil Length	332mm/13.07in	Coil Height	300.7mm/11.84in
Inlet Connection (ID)	6.15mm/0.24in	Outlet Connection (ID)	6.15mm/0.24in
Tube Width	16mm/0.63in	Tube Height	1.3mm/0.05in
Fin Width	16mm/0.63in	Fin Height	8.1mm/0.32in
Fin Pitch	1.1mm/23FPI	Manifold Diameter	20mm/0.79in
Num. of Tubes	29	Pass Distribution	5/6/6/5/4/3
Internal Volume	0.17L/10.37in^3	Coil Weight	0.82Kg/1.81LB
PS	45Bar/ 652.7Psig	TS (Min ~ Max)	-40°C to 121°C/ -40°F to 250 °F
Ambient Temp. Range	-40°C to 72°C / -40°F to 161.6°F	Storage Temp. Range	-40°C to 121°C/ -40°F to 250 °F

Code NO.

Drawing NO.	IPACK	MPACK
DF0111	021U0087(I/48)	021U0080(M/24)
DF0111E	021U1531(I/48)	021U1299(M/24)

Material

Tube	9153	Manifold	3003
Fin	3003	Connecting Tube	Cu

Approval

PED	N/A (Not needed for this product)	UL	UL 207
Refrigerant	Group 1: R290, R32, R600, R600a, R1234yf, R444B, R454B, R452B, R447A, R454C, R454A. Group 2: R22, R134a, R404A, R407A, R407B, R407C, R410A, R507A, R1234ze, R513A, R448A, R449A, R407F, R452A, R450A, R422B, R422D, R438A, R1233zd(E), R449B, R407H, R513B. Note: R32 is available for MCHEs, but if customers request special PS & TS, please confirm with engineering team.		

Mounting Bars

Aluminum MCHEs expand and contract when exposed to big temperature changes. Installation supports/brackets must allow the MCHE to move in two dimensions;

Performance Data （Typical Refrigerant Application）

Air Velocity （m/s） (ft/min)	Performance （KW/Btu/h×1000）							
	R410A				R134a			
	△=10K/18℉	△=15K/27℉	△=20K/36℉	△=25K/45℉	△=10K/18℉	△=15K/27℉	△=20K/36℉	△=25K/45℉
1.0/197	0.8/2.73	1.22/4.16	1.69/5.77	2.14/7.3	0.76/2.59	1.17/3.99	1.58/5.39	2.02/6.89
1.5/295	1.1/3.75	1.75/5.97	2.38/8.12	3.00/10.24	1.04/3.55	1.61/5.49	2.23/7.61	2.82/9.62
2.0/394	1.36/4.64	2.2/7.51	2.98/10.17	3.77/12.86	1.28/4.37	1.99/6.79	2.77/9.45	3.5/11.94
2.5/492	1.67/5.7	2.59/8.84	3.52/12.01	4.47/15.25	1.49/5.08	2.39/8.15	3.25/11.09	4.08/13.92
3.0/591	1.9/6.48	2.96/10.1	4.02/13.72	5.11/17.44	1.67/5.7	2.71/9.25	3.67/12.52	4.61/15.73

Air Velocity （m/s） (ft/min)	Performance （KW/Btu/h×1000）							
	R404A				R407C			
	△=10K/18℉	△=15K/27℉	△=20K/36℉	△=25K/45℉	△=10K/18℉	△=15K/27℉	△=20K/36℉	△=25K/45℉
1.0/197	0.79/2.7	1.25/4.27	1.69/5.77	2.14/7.3	0.52/1.77	0.87/2.97	1.42/4.85	1.89/6.45
1.5/295	1.07/3.65	1.75/5.97	2.36/8.05	2.99/10.2	0.7/2.39	1.35/4.61	2.02/6.89	2.65/9.04
2.0/394	1.4/4.78	2.18/7.44	2.95/10.07	3.74/12.76	0.86/2.93	1.67/5.7	2.53/8.63	3.31/11.29
2.5/492	1.65/5.63	2.56/8.73	3.48/11.87	4.41/15.05	0.99/3.38	2.04/6.96	2.98/10.17	3.9/13.31
3.0/591	1.88/6.41	2.91/9.93	3.95/13.48	5.02/17.13	1.1/3.75	2.32/7.92	3.38/11.53	4.44/15.15

Air Velocity （m/s） (ft/min)	Performance （KW/Btu/h×1000）							
	R290				R454B			
	△=10K/18℉	△=15K/27℉	△=20K/36℉	△=25K/45℉	△=10K/18℉	△=15K/27℉	△=20K/36℉	△=25K/45℉
1.0/197	0.79/2.7	1.2/4.09	1.62/5.53	2.06/7.03	0.73/2.48	1.15/3.92	1.59/5.45	2.03/6.94
1.5/295	1.08/3.68	1.66/5.66	2.29/7.81	2.89/9.86	1.01/3.42	1.62/5.56	2.24/7.64	2.85/9.73
2.0/394	1.34/4.57	2.06/7.03	2.87/9.79	3.6/12.28	1.24/4.24	2.04/6.97	2.81/9.59	3.58/12.22
2.5/492	1.57/5.36	2.5/8.53	3.38/11.53	4.25/14.5	1.46/4.98	2.42/8.26	3.32/11.35	4.24/14.48
3.0/591	1.77/6.04	2.84/9.69	3.85/13.14	4.85/16.55	1.65/5.65	2.76/9.43	3.79/12.96	4.84/16.54

Air-side Pressure Drop Data

Air velocity （m/s） / (ft/min)	Pressure drop (Pa)/ (inch H2O)	Flow rate (m3/h) / (cfm)
1.0/197	13.4/0.05	284.97/167.63
1.5/295	22.5/0.09	427.45/251.44
2.0/394	33.10/0.13	569.93/335.25
2.5/492	45.2/0.18	712.42/419.07
3.0/591	58.8/0.24	854.9/502.88

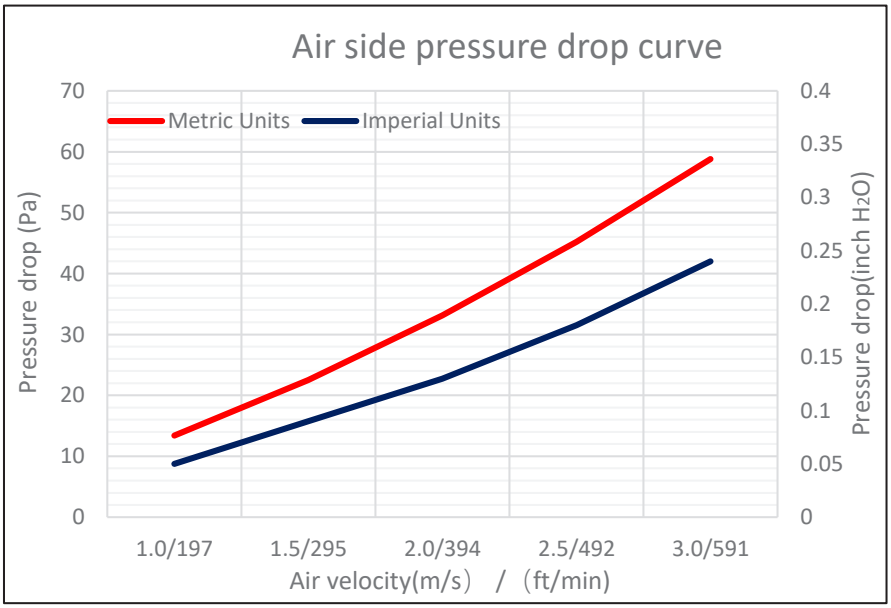

D1100-C CONDENSER COIL

Micro-Channel Heat Exchanger

Dimensional Drawing

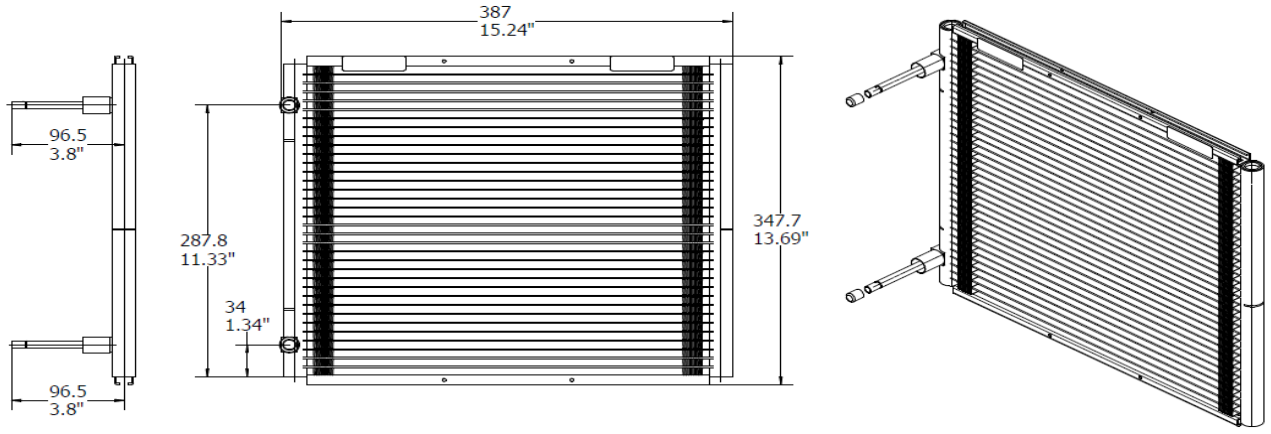

Parameters Table

Model Type	D1100-C	Platform	C116-23FPI
Coil Length	387mm/15.24in	Coil Height	347.7mm/13.69in
Inlet Connection (ID)	6.15mm/0.24in	Outlet Connection (ID)	6.15mm/0.24in
Tube Width	16mm/0.63in	Tube Height	1.3mm/0.05in
Fin Width	16mm/0.63in	Fin Height	8.1mm/0.32in
Fin Pitch	1.1mm/23FPI	Manifold Diameter	20mm/0.79in
Num. of Tubes	34	Pass Distribution	8/10/9/7
Internal Volume	0.22L/13.43in^3	Coil Weight	1.08Kg/2.37LB
PS	45Bar/ 652.7Psig	TS (Min ~ Max)	-40°C to 121°C/ -40°F to 250 °F
Ambient Temp. Range	-40°C to 72°C / -40°F to 161.6°F	Storage Temp. Range	-40°C to 121°C/ -40°F to 250 °F

Code NO.

Drawing NO.	IPACK	MPACK
DF0121	021U0088(I/48)	021U0081(M/24)
DF0121E	021U1532(I/48)	021U1300(M/24)

Material

Tube	9153	Manifold	3003
Fin	3003	Connecting Tube	Cu

Approval

PED	N/A (Not needed for this product)	UL	UL 207

Refrigerant	Group 1: R290, R32, R600, R600a, R1234yf, R444B, R454B, R452B, R447A, R454C, R454A. Group 2: R22, R134a, R404A, R407A, R407B, R407C, R410A, R507A, R1234ze, R513A, R448A, R449A, R407F, R452A, R450A, R422B, R422D, R438A, R1233zd(E), R449B, R407H, R513B. Note: R32 is available for MCHEs, but if customers request special PS & TS, please confirm with engineering team.

Mounting Bars

Aluminum MCHEs expand and contract when exposed to big temperature changes. Installation supports/brackets must allow the MCHE to move in two dimensions;

Performance Data （Typical Refrigerant Application）

Air Velocity （m/s） (ft/min)	Performance （KW/Btu/h×1000）							
	R410A				R134a			
	△=10K/18℉	△=15K/27℉	△=20K/36℉	△=25K/45℉	△=10K/18℉	△=15K/27℉	△=20K/36℉	△=25K/45℉
1.0/197	1.1/3.75	1.69/5.77	2.29/7.81	2.96/10.1	1.05/3.58	1.63/5.56	2.2/7.51	2.77/9.45
1.5/295	1.51/5.15	2.34/7.98	3.28/11.19	4.16/14.19	1.44/4.91	2.24/7.64	3.03/10.34	3.83/13.07
2.0/394	1.87/6.38	2.98/10.17	4.11/14.02	5.24/17.88	1.77/6.04	2.76/9.42	3.75/12.8	4.88/16.65
2.5/492	2.19/7.47	3.57/12.18	4.88/16.65	6.21/21.19	2.06/7.03	3.22/10.99	4.39/14.98	5.74/19.58
3.0/591	2.48/8.46	4.07/13.89	5.58/19.04	7.11/24.26	2.32/7.92	3.64/12.42	5.14/17.54	6.49/22.14

Air Velocity （m/s） (ft/min)	Performance （KW/Btu/h×1000）							
	R404A				R407C			
	△=10K/18℉	△=15K/27℉	△=20K/36℉	△=25K/45℉	△=10K/18℉	△=15K/27℉	△=20K/36℉	△=25K/45℉
1.0/197	1.09/3.72	1.68/5.73	2.34/7.98	2.97/10.13	0.71/2.42	1.36/4.64	1.97/6.72	2.58/8.8
1.5/295	1.48/5.05	2.3/7.85	3.27/11.16	4.16/14.19	0.96/3.28	1.87/6.38	2.72/9.28	3.66/12.49
2.0/394	1.81/6.18	3/10.24	4.1/13.99	5.22/17.81	1.17/3.99	2.31/7.88	3.37/11.5	4.59/15.66
2.5/492	2.11/7.2	3.54/12.08	4.84/16.51	6.17/21.05	1.35/4.61	2.7/9.21	4.11/14.02	5.42/18.49
3.0/591	2.37/8.09	4.03/13.75	5.52/18.83	7.03/23.99	1.51/5.15	3.06/10.44	4.69/16	6.18/21.09

Air Velocity (m/s) (ft/min)	Performance （KW/Btu/h×1000）							
	R290				R454B			
	△=10K/18℉	△=15K/27℉	△=20K/36℉	△=25K/45℉	△=10K/18℉	△=15K/27℉	△=20K/36℉	△=25K/45℉
1.0/197	1.06/3.62	1.64/5.6	2.2/7.51	2.77/9.45	0.99/3.40	1.59/5.44	2.18/7.45	2.78/9.49
1.5/295	1.46/4.98	2.26/7.71	3.05/10.41	3.85/13.14	1.37/4.70	2.20/7.53	3.03/10.34	2.78/9.49
2.0/394	1.81/6.18	2.81/9.59	3.8/12.97	4.94/16.86	1.70/5.82	2.74/9.37	3.88/13.26	4.97/16.97
2.5/492	2.12/7.23	3.29/11.23	4.61/15.73	5.83/19.89	2.01/6.82	3.23/11.02	4.60/15.70	5.89/20.12
3.0/591	2.39/8.15	3.73/12.73	5.25/17.91	6.65/22.69	2.26/7.73	3.79/12.93	5.25/17.94	6.74/23.01

Air-side Pressure Drop Data

Air velocity (m/s) / (ft/min)	Pressure drop (Pa)/ (inch H_2O)	Flow rate (m^3/h) / (cfm)
1.0/197	13.4/0.05	397.56/233.86
1.5/295	22.5/0.09	596.35/350.79
2.0/394	33.10/0.13	795.13/467.72
2.5/492	45.2/0.18	993.91/548.65
3.0/591	58.8/0.24	1192.7/701.59

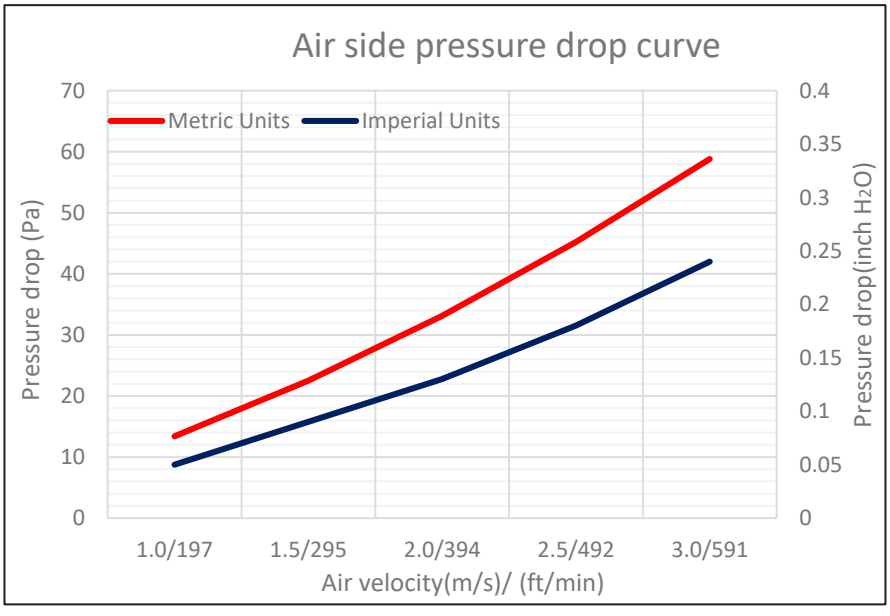

D1200-C CONDENSER COIL

Micro-Channel Heat Exchanger

Dimensional Drawing

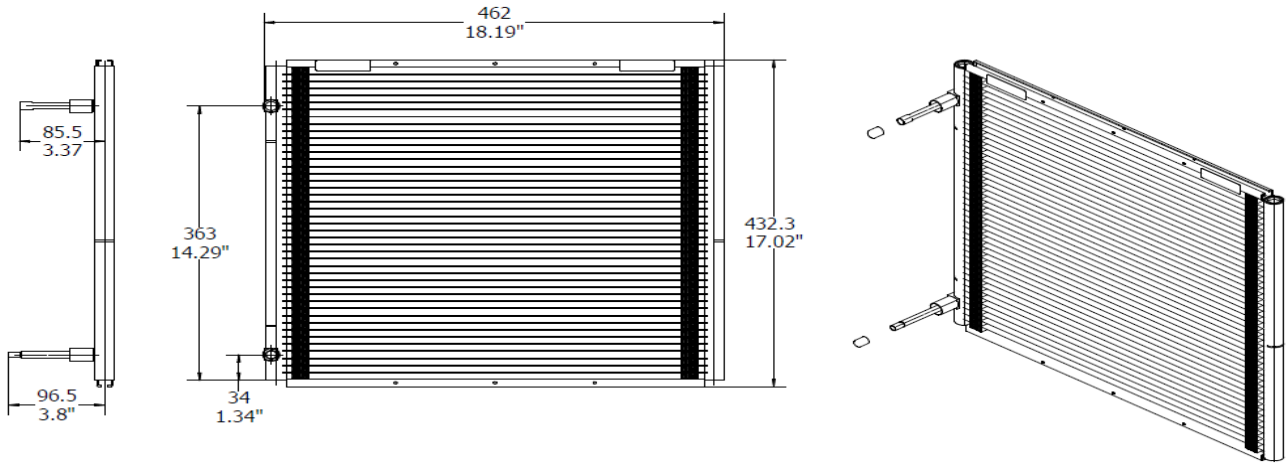

Parameters Table

Model Type	D1200-C	Platform	C116-23FPI
Coil Length	462mm/18.19in	Coil Height	432.3mm/17.02in
Inlet Connection (ID)	8.2mm/0.32in	Outlet Connection (ID)	6.15mm/0.24in
Tube Width	16mm/0.63in	Tube Height	1.3mm/0.05in
Fin Width	16mm/0.63in	Fin Height	8.1mm/0.32in
Fin Pitch	1.1mm/23FPI	Manifold Diameter	20mm/0.79in
Num. of Tubes	43	Pass Distribution	10/14/12/7
Internal Volume	0.30L/18.31in^3	Coil Weight	1.54Kg/3.40LB
PS	45Bar/ 652.7Psig	TS (Min ~ Max)	-40°C to 121°C/ -40°F to 250 °F
Ambient Temp. Range	-40°C to 72°C / -40°F to 161.6°F	Storage Temp. Range	-40°C to 121°C/ -40°F to 250 °F

Code NO.

Drawing NO.	IPACK	MPACK
DF0131	021U0089(I/32)	021U0082(M/16)
DF0131E	021U1533(I/32)	021U1301(M/16)

Material

Tube	9153	Manifold	3003
Fin	3003	Connecting Tube	Cu

Approval

PED	N/A (Not needed for this product)	UL	UL 207
Refrigerant	Group 1: R290, R32, R600, R600a, R1234yf, R444B, R454B, R452B, R447A, R454C, R454A. Group 2: R22, R134a, R404A, R407A, R407B, R407C, R410A, R507A, R1234ze, R513A, R448A, R449A, R407F, R452A, R450A, R422B, R422D, R438A, R1233zd(E), R449B, R407H, R513B. Note: R32 is available for MCHEs, but if customers request special PS & TS, please confirm with engineering team.		

Mounting Bars

Aluminum MCHEs expand and contract when exposed to big temperature changes. Installation supports/brackets must allow the MCHE to move in two dimensions;

Performance Data （Typical Refrigerant Application）

Air Velocity (m/s) (ft/min)	Performance （KW/Btu/h×1000）							
	R410A				R134a			
	△=10K/18°F	△=15K/27°F	△=20K/36°F	△=25K/45°F	△=10K/18°F	△=15K/27°F	△=20K/36°F	△=25K/45°F
1.0/197	1.72/5.87	2.64/9.01	3.63/12.39	4.59/15.66	1.64/5.6	2.53/8.63	3.4/11.6	4.34/14.81
1.5/295	2.37/8.09	3.76/12.83	5.09/17.37	6.45/22.01	2.24/7.64	3.46/11.81	4.77/16.28	6.03/20.57
2.0/394	2.93/10	4.71/16.07	6.39/21.8	8.1/27.64	2.75/9.38	4.26/14.54	5.94/20.27	7.49/25.56
2.5/492	3.58/12.21	5.58/19.04	7.57/25.83	9.6/32.76	3.19/10.88	4.96/16.92	6.94/23.68	8.73/29.79
3.0/591	4.08/13.92	6.35/21.67	8.64/29.48	10.97/37.43	3.58/12.21	5.77/19.69	7.84/26.75	9.85/33.61

Air Velocity (m/s) (ft/min)	Performance （KW/Btu/h×1000）							
	R404A				R407C			
	△=10K/18°F	△=15K/27°F	△=20K/36°F	△=25K/45°F	△=10K/18°F	△=15K/27°F	△=20K/36°F	△=25K/45°F
1.0/197	1.69/5.77	2.69/9.18	3.64/12.42	4.6/15.7	1.11/3.79	2.12/7.23	3.06/10.44	4.06/13.85
1.5/295	2.3/7.85	3.75/12.8	5.08/17.33	6.43/21.94	1.51/5.15	2.92/9.96	4.33/14.77	5.68/19.38
2.0/394	2.99/10.2	4.68/15.97	6.34/21.63	8.03/27.4	1.84/6.28	3.59/12.25	5.42/18.49	7.09/24.19
2.5/492	3.53/12.04	5.5/18.77	7.47/25.49	9.47/32.31	2.11/7.2	4.2/14.33	6.39/21.8	8.36/28.52
3.0/591	4.01/13.68	6.24/21.29	8.49/28.97	10.76/36.71	2.36/8.05	4.97/16.96	7.25/24.74	9.51/32.45

Air Velocity (m/s) (ft/min)	Performance （KW/Btu/h×1000）							
	R290				R454B			
	△=10K/18°F	△=15K/27°F	△=20K/36°F	△=25K/45°F	△=10K/18°F	△=15K/27°F	△=20K/36°F	△=25K/45°F
1.0/197	1.65/5.63	2.54/8.67	3.42/11.67	4.35/14.84	1.56/5.35	2.48/8.48	3.44/11.74	4.38/14.96
1.5/295	2.28/7.78	3.51/11.98	4.83/16.48	6.09/20.78	2.21/7.54	3.44/11.75	4.82/16.45	6.14/20.98
2.0/394	2.82/9.62	4.35/14.84	6.05/20.64	7.62/26.00	2.68/9.16	4.40/15.01	6.05/20.64	7.71/26.36
2.5/492	3.3/11.26	5.26/17.95	7.13/24.33	8.98/30.64	3.14/10.74	5.20/17.75	7.15/24.40	9.14/31.19
3.0/591	3.72/12.69	5.99/20.44	8.11/27.67	10.21/34.84	3.56/12.16	5.94/20.27	8.16/27.85	10.43/35.61

Air-side Pressure Drop Data

Air velocity (m/s) / (ft/min)	Pressure drop (Pa)/ (inch H_2O)	Flow rate (m^3/h) / (cfm)
1.0/197	13.4/0.05	611.52/359.72
1.5/295	22.5/0.09	917.29/539.78
2.0/394	33.10/0.13	1223.05/719.44
2.5/492	45.2/0.18	1528.81/899.30
3.0/591	58.8/0.24	1834.571079.16

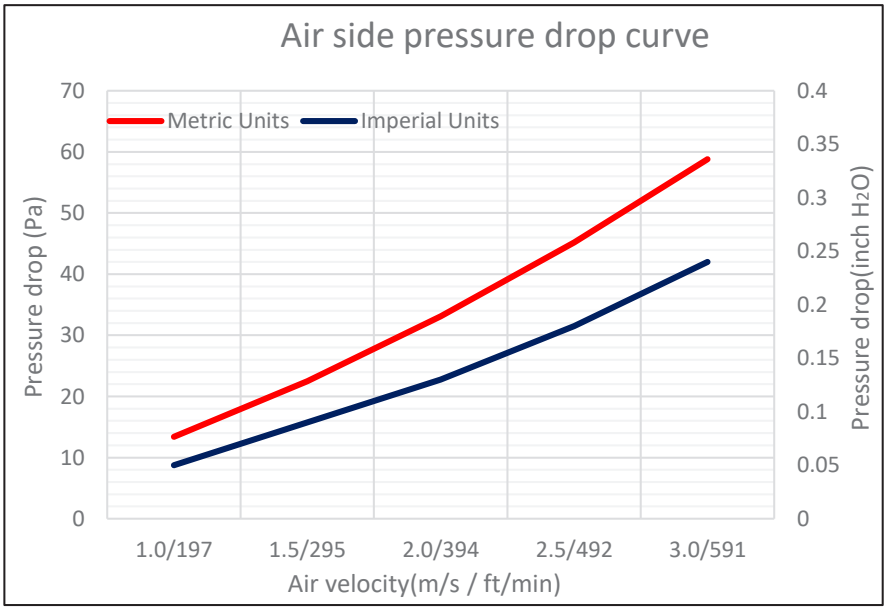

D1300-C CONDENSER COIL

Micro-Channel Heat Exchanger

Dimensional Drawing

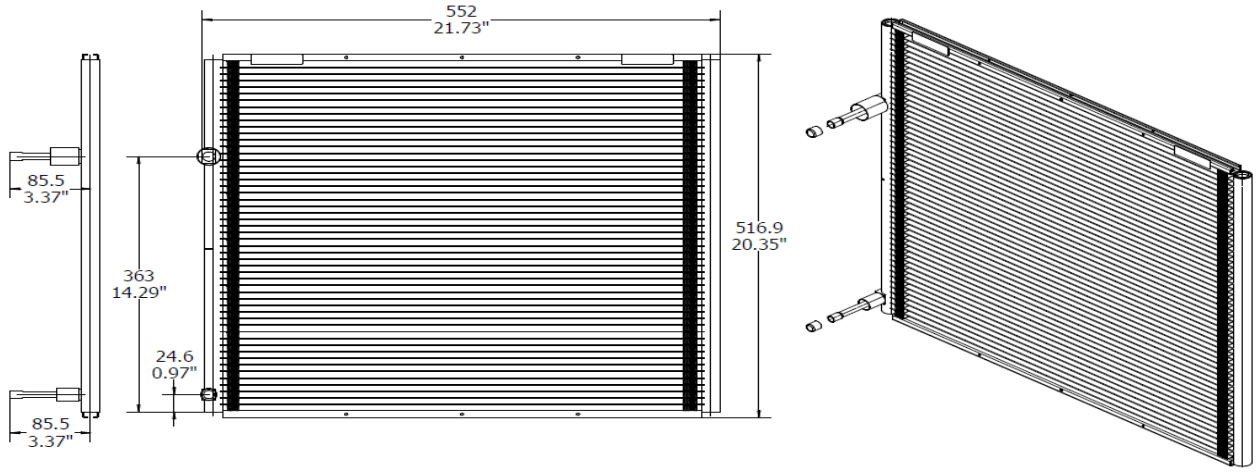

Parameters Table

Model Type	D1300-C	Platform	C116-23FPI
Coil Length	552mm/21.73in	Coil Height	516.9mm/20.35in
Inlet Connection (ID)	9.52mm/0.37in	Outlet Connection (ID)	7.94mm/0.31in
Tube Width	16mm/0.63in	Tube Height	1.3mm/0.05in
Fin Width	16mm/0.63in	Fin Height	8.1mm/0.32in
Fin Pitch	1.1mm/23FPI	Manifold Diameter	20mm/0.79in
Num. of Tubes	52	Pass Distribution	28/24
Internal Volume	0.40L/24.41in^3	Coil Weight	2.15Kg/4.75 LB
PS	45Bar/ 652.7Psig	TS (Min ~ Max)	-40°C to 121°C/ -40°F to 250 °F
Ambient Temp. Range	-40°C to 72°C / -40°F to 161.6°F	Storage Temp. Range	-40°C to 121°C/ -40°F to 250 °F

Code NO.

Drawing NO.	IPACK	MPACK
DF0141	021U0090(I/32)	021U0083(M/16)
DF0141E	021U1534(I/32)	021U1302(M/16)

Material

Tube	9153	Manifold	3003
Fin	3003	Connecting Tube	Cu

Approval

PED	N/A (Not needed for this product)	UL	UL 207
Refrigerant	Group 1: R290, R32, R600, R600a, R1234yf, R444B, R454B, R452B, R447A, R454C, R454A. Group 2: R22, R134a, R404A, R407A, R407B, R407C, R410A, R507A, R1234ze, R513A, R448A, R449A, R407F, R452A, R450A, R422B, R422D, R438A, R1233zd(E), R449B, R407H, R513B. Note: R32 is available for MCHEs, but if customers request special PS & TS, please confirm with engineering team.		

Mounting Bars

Aluminum MCHEs expand and contract when exposed to big temperature changes. Installation supports/brackets must allow the MCHE to move in two dimensions;

Performance Data （Typical Refrigerant Application）

Air Velocity （m/s） (ft/min)	Performance （KW/Btu/h×1000）							
	R410A				R134a			
	△=10K/18°F	△=15K/27°F	△=20K/36°F	△=25K/45°F	△=10K/18°F	△=15K/27°F	△=20K/36°F	△=25K/45°F
1.0/197	2.08/7.1	3.73/12.73	5.08/17.33	6.42/21.91	2.3/7.85	3.61/12.32	4.91/16.75	6.2/21.15
1.5/295	3.27/11.16	5.15/17.57	7.02/23.95	9.23/31.49	3.15/10.75	4.98/16.99	6.78/23.13	8.57/29.24
2.0/394	4.05/13.82	6.39/21.8	9.04/30.84	11.61/39.61	3.89/13.27	6.16/21.02	8.41/28.69	10.65/36.34
2.5/492	4.75/16.21	7.49/25.56	10.74/36.64	13.79/47.05	4.54/15.49	7.22/24.63	9.85/33.61	12.49/42.62
3.0/591	5.37/18.32	8.49/28.97	12.49/42.62	15.79/53.88	5.13/17.5	8.16/27.84	11.18/38.15	14.41/49.17

Air Velocity (m/s) (ft/min)	Performance （KW/Btu/h×1000）							
	R404A				R407C			
	△=10K/18°F	△=15K/27°F	△=20K/36°F	△=25K/45°F	△=10K/18°F	△=15K/27°F	△=20K/36°F	△=25K/45°F
1.0/197	2.37/8.09	3.71/12.66	5.04/17.2	6.55/22.35	1.44/4.91	2.98/10.17	4.37/14.91	5.74/19.58
1.5/295	3.23/11.02	5.08/17.33	6.91/23.58	9.27/31.63	1.87/6.38	4.1/13.99	6.03/20.57	7.95/27.13
2.0/394	3.96/13.51	6.26/21.36	9.07/30.95	11.65/39.75	2.51/8.56	5.08/17.33	7.49/25.56	9.88/33.71
2.5/492	4.61/15.73	7.29/24.87	10.75/36.68	13.79/47.05	2.93/10	5.93/20.23	8.78/29.96	11.67/39.82
3.0/591	5.18/17.67	8.31/28.35	12.28/41.9	15.77/53.81	3.27/11.16	6.7/22.86	9.94/33.92	13.73/46.85

Air Velocity (m/s)(ft/min)	Performance （KW/Btu/h×1000）							
	R290				R454B			
	△=10K/18°F	△=15K/27°F	△=20K/36°F	△=25K/45°F	△=10K/18°F	△=15K/27°F	△=20K/36°F	△=25K/45°F
1.0/197	2.14/7.3	3.61/12.32	4.92/16.79	6.19/21.12	1.97/6.73	3.50/11.95	4.84/16.53	6.19/21.13
1.5/295	3.18/10.85	4.99/17.03	6.8/23.2	8.59/29.31	2.97/10.14	4.85/16.57	6.72/22.93	8.59/29.32
2.0/394	3.94/13.44	6.2/21.15	8.47/28.9	10.7/36.51	3.69/12.62	6.04/20.61	8.36/28.54	11.04/37.68
2.5/492	4.63/15.8	7.28/24.84	9.95/33.95	12.58/42.92	4.34/14.81	7.09/24.22	9.83/33.55	13.10/44.73
3.0/591	5.24/17.88	8.25/28.15	11.3/38.56	14.87/50.74	4.92/16.79	8.05/27.50	11.59/39.57	15.01/51.20

Air-side Pressure Drop Data

Air velocity (m/s) / (ft/min)	Pressure drop (Pa)/ (inch H_2O)	Flow rate (m^3/h) / (cfm)
1.0/197	13.4/0.05	898/528.24
1.5/295	22.5/0.09	1347/792.35
2.0/394	33.10/0.13	1796/1056.47
2.5/492	45.2/0.18	2245/1320.59
3.0/591	58.8/0.24	2694/1584.71

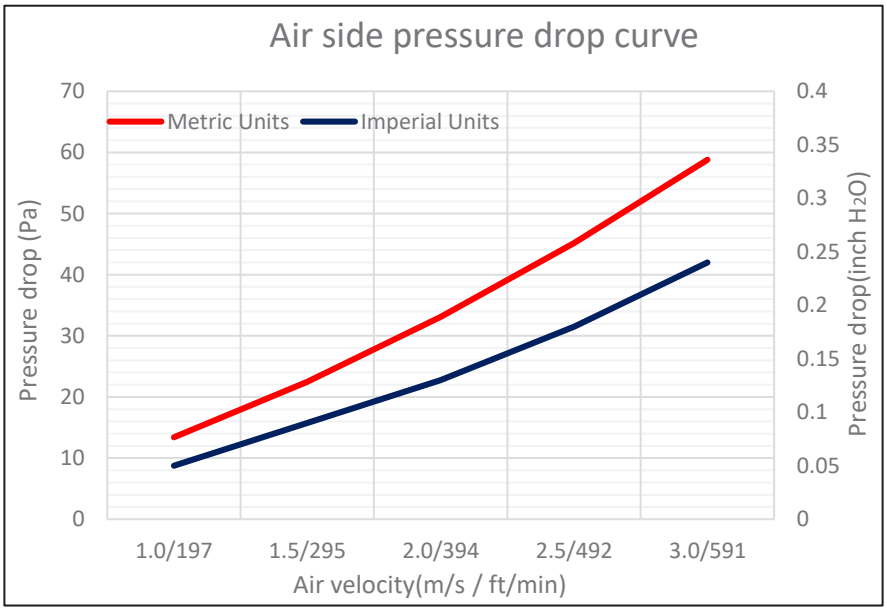

D1400-C CONDENSER COIL

Micro-Channel Heat Exchanger

Dimensional Drawing

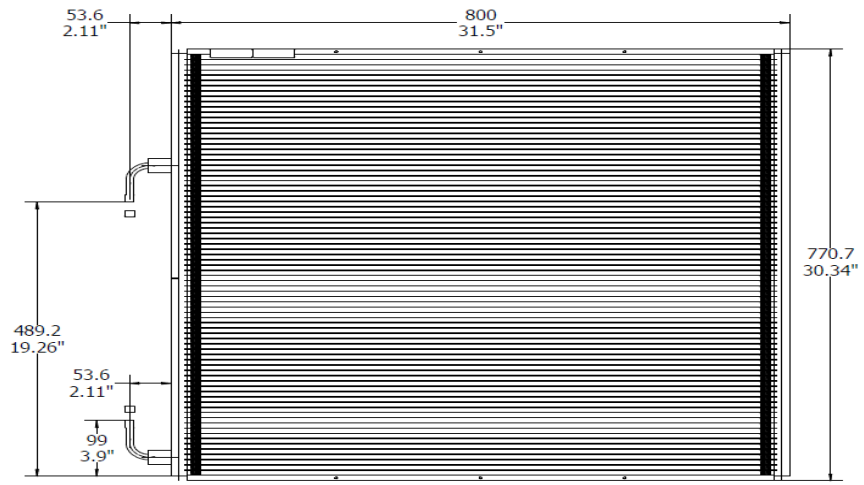

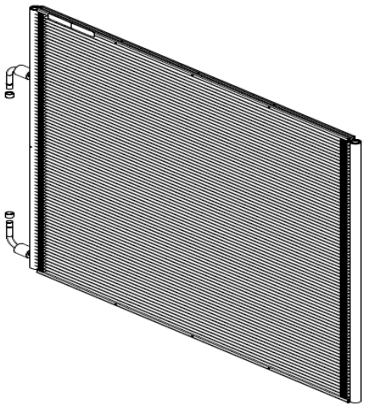

Parameters Table

Model Type	D1400-C	Platform	C116-23FPI
Coil Length	800mm/31.5 in	Coil Height	770.7mm/30.34in
Inlet Connection (ID)	9.7mm/0.38in	Outlet Connection (ID)	9.7mm/0.38in
Tube Width	16mm/0.63in	Tube Height	1.3mm/0.05in
Fin Width	16mm/0.63in	Fin Height	8.1mm/0.32in
Fin Pitch	1.1mm/23FPI	Manifold Diameter	20mm/0.79in
Num. of Tubes	79	Pass Distribution	42/37
Internal Volume	0.70L/42.72in^3	Coil Weight	4.51Kg/9.94 LB
PS	45Bar/ 652.7Psig	TS (Min ~ Max)	-40°C to 121°C/ -40°F to 250 °F
Ambient Temp. Range	-40°C to 72°C / -40°F to 161.6°F	Storage Temp. Range	-40°C to 121°C/ -40°F to 250 °F

Code NO.

Drawing NO.	IPACK	MPACK
DF0151	021U0091(I/15)	021U0084(M/8)
DF0151E	021U1535(I/15)	021U1303(M/8)

Material

Tube	9153	Manifold	3003
Fin	3003	Connecting Tube	Cu

Approval

PED	N/A (Not needed for this product)	UL	UL 207
Refrigerant	Group 1: R290, R32, R600, R600a, R1234yf, R444B, R454B, R452B, R447A, R454C, R454A. Group 2: R22, R134a, R404A, R407A, R407B, R407C, R410A, R507A, R1234ze, R513A, R448A, R449A, R407F, R452A, R450A, R422B, R422D, R438A, R1233zd(E), R449B, R407H, R513B. Note: R32 is available for MCHEs, but if customers request special PS & TS, please confirm with engineering team.		

Mounting Bars

Aluminum MCHEs expand and contract when exposed to big temperature changes. Installation supports/brackets must allow the MCHE to move in two dimensions;

Performance Data （Typical Refrigerant Application）

Air Velocity (m/s) (ft/min)	Performance（KW/Btu/h×1000）							
	R410A				R134a			
	△=10K/18°F	△=15K/27°F	△=20K/36°F	△=25K/45°F	△=10K/18°F	△=15K/27°F	△=20K/36°F	△=25K/45°F
1.0/197	5.64/19.24	8.69/29.65	11.73/40.02	15.15/51.69	5.43/18.53	8.36/28.52	11.27/38.45	14.17/48.35
1.5/295	7.79/26.58	12.02/41.01	16.76/57.19	21.29/72.64	7.43/25.35	11.5/39.24	15.55/53.06	19.57/66.77
2.0/394	9.66/32.96	14.93/50.94	21.05/71.82	26.75/91.27	9.15/31.22	14.2/48.45	19.23/65.61	24.77/84.52
2.5/492	11.32/38.62	18.26/62.3	24.93/85.06	31.72/108.23	10.65/36.34	16.56/56.5	22.49/76.74	29.08/99.22
3.0/591	12.82/43.74	20.86/71.17	28.5/97.24	36.26/123.72	11.98/40.88	18.69/63.77	26.17/89.29	32.96/112.46

Air Velocity (m/s) (ft/min)	Performance（KW/Btu/h×1000）							
	R404A				R407C			
	△=10K/18°F	△=15K/27°F	△=20K/36°F	△=25K/45°F	△=10K/18°F	△=15K/27°F	△=20K/36°F	△=25K/45°F
1.0/197	5.58/19.04	8.62/29.41	11.99/40.91	15.2/51.86	3.68/12.56	7/23.88	10.13/34.56	13.24/45.17
1.5/295	7.64/26.07	11.82/40.33	16.76/57.19	21.26/72.54	5/17.06	9.66/32.96	14.01/47.8	18.6/63.46
2.0/394	9.39/32.04	15.35/52.37	20.95/71.48	26.63/90.86	6.12/20.88	11.94/40.74	17.39/59.33	23.44/79.98
2.5/492	10.91/37.22	18.11/61.79	24.72/84.34	31.42/107.21	7.1/24.23	13.95/47.6	20.87/71.21	27.68/94.44
3.0/591	12.27/41.87	20.6/70.29	28.15/96.05	35.78/122.08	7.92/27.02	15.79/53.88	23.91/81.58	31.53/107.58

Air Velocity (m/s) (ft/min)	Performance（KW/Btu/h×1000）							
	R290				R454B			
	△=10K/18°F	△=15K/27°F	△=20K/36°F	△=25K/45°F	△=10K/18°F	△=15K/27°F	△=20K/36°F	△=25K/45°F
1.0/197	5.57/19	8.53/29.1	11.49/39.2	14.44/49.27	5.16/17.61	8.23/28.10	11.27/38.47	14.32/48.85
1.5/295	7.68/26.2	11.81/40.3	15.94/54.39	20.04/68.38	7.16/24.45	11.42/38.98	15.66/53.46	20.38/69.45
2.0/394	9.49/32.38	14.67/50.05	19.83/67.66	25.58/87.28	8.90/30.38	14.21/48.51	20.01/68.29	25.58/87.31
2.5/492	11.13/37.98	17.22/58.75	23.29/79.47	30.23/103.14	10.44/35.63	16.71/57.03	23.69/80.85	30.31/103.45
3.0/591	12.6/42.99	19.51/66.57	27.21/92.84	34.45/117.54	11.83/40.39	19.57/66.80	27.07/92.37	34.64/118.20

Air-side Pressure Drop Data

Air velocity (m/s) / (ft/min)	Pressure drop (Pa)/ (inch H_2O)	Flow rate (m^3/h) / (cfm)
1.0/197	13.4/0.05	2026.89/1192.29
1.5/295	22.5/0.09	3040.33/1788.43
2.0/394	33.10/0.13	4053.78/2384.58
2.5/492	45.2/0.18	5067.2/2980.72
3.0/591	58.8/0.24	6080.67/3576.86

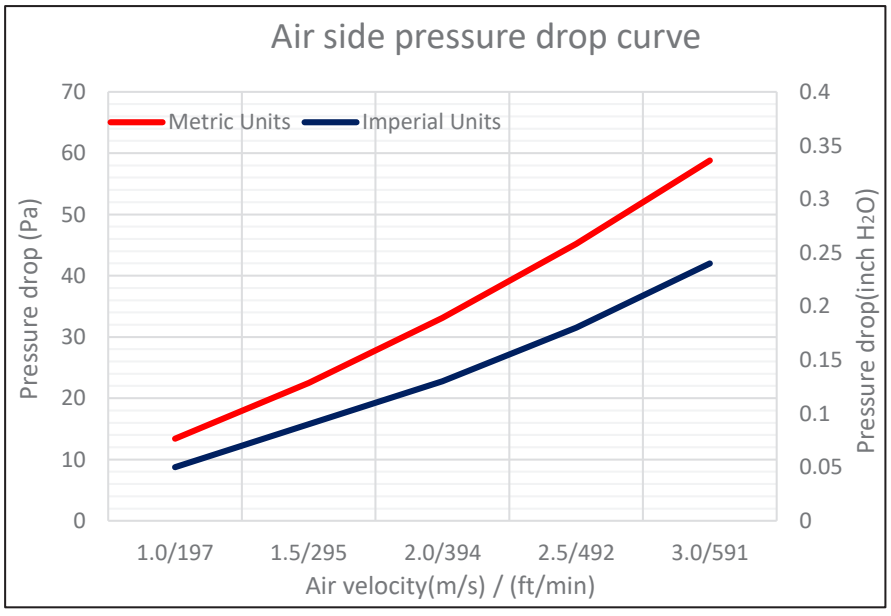

D1500-C CONDENSER COIL

Micro-Channel Heat Exchanger

Dimensional Drawing

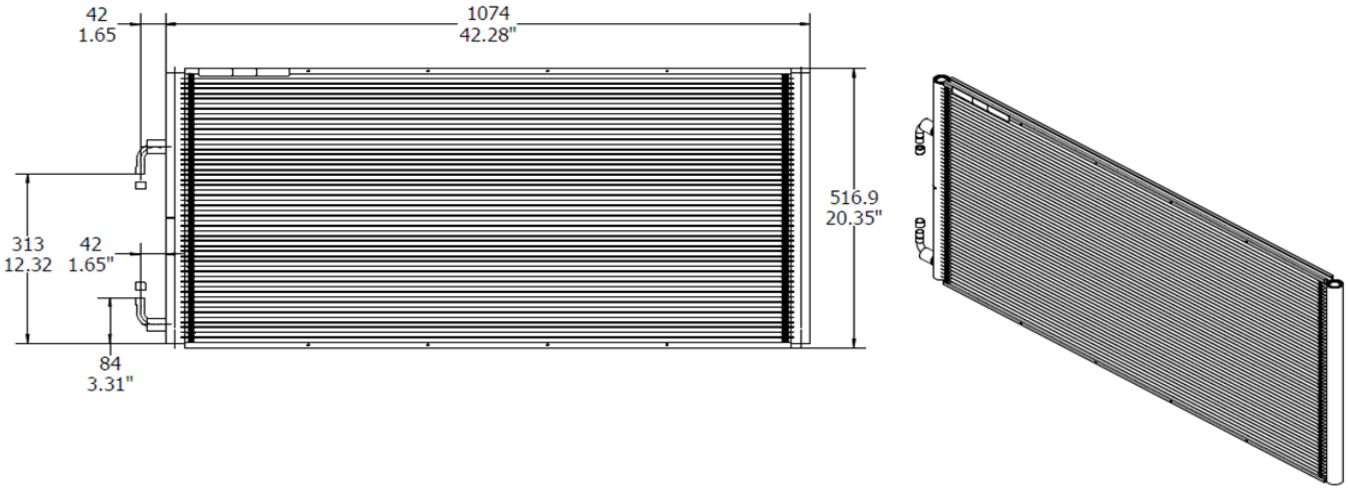

Parameters Table

Model Type	D1500-C	Platform	C125-23FPI
Coil Length	1074mm/42.28 in	Coil Height	516.9mm/20.35in
Inlet Connection (ID)	12.9mm/0.51in	Outlet Connection (ID)	12.9mm/0.51in
Tube Width	25.4mm/1 in	Tube Height	1.3mm/0.05in
Fin Width	25.4mm/1 in	Fin Height	8.1mm/0.32in
Fin Pitch	1.1mm/23FPI	Manifold Diameter	32mm/1.26 in
Num. of Tubes	52	Pass Distribution	28/24
Internal Volume	1.15L/70.18in^3	Coil Weight	6.57Kg/14.49 LB
PS	45Bar/ 652.7Psig	TS (Min ~ Max)	-40°C to 121°C/ -40°F to 250 °F
Ambient Temp. Range	-40°C to 72°C / -40°F to 161.6°F	Storage Temp. Range	-40°C to 121°C/ -40°F to 250 °F

Code NO.

Drawing NO.	IPACK	MPACK
DF0081	021U0098(I/24)	021U0095(M/16)
DF0081E	021U1528(I/24)	021U1296(M/16)

Material

Tube	9153	Manifold	3003
Fin	3003	Connecting Tube	Cu

Approval

PED	PED Cat I (Group 2)/ Cat II (Group 1)	UL	UL 207
Refrigerant	Group 1: R290, R32, R600, R600a, R1234yf, R717, R444B, R454B, R452B, R447A, R454C, R454A. Group 2: R22, R134a, R404A, R407A, R407B, R407C, R410A, R507A, R1234ze, R513A, R448A, R449A, R407F, R452A, R450A, R422B, R422D, R438A, R1233zd(E), R449B, R407H, R513B. Note: R32 is available for MCHEs, but if customers request special PS & TS, please confirm with engineering team.		

Mounting Bars

Aluminum MCHEs expand and contract when exposed to big temperature changes. Installation supports/brackets must allow the MCHE to move in two dimensions;

Performance Data （Typical Refrigerant Application）

Air Velocity (m/s) (ft/min)	Performance （KW/Btu/h×1000）							
	R410A				R134a			
	△=10K/18°F	△=15K/27°F	△=20K/36°F	△=25K/45°F	△=10K/18°F	△=15K/27°F	△=20K/36°F	△=25K/45°F
1.0/197	5.54/18.9	8.24/28.11	11.33/38.66	14.41/49.17	5.31/18.12	8.1/27.64	10.85/37.02	13.62/46.47
1.5/295	7.9/26.95	12.05/41.11	16.47/56.2	20.79/70.94	7.48/25.52	11.46/39.1	15.41/52.58	19.36/66.06
2.0/394	10.03/34.22	15.33/52.31	21.12/72.06	26.68/91.03	9.4/32.07	14.45/49.3	19.49/66.5	24.86/84.82
2.5/492	11.97/40.84	18.78/64.08	25.42/86.73	32.13/109.63	11.11/37.91	17.14/58.48	23.12/78.89	29.46/100.52
3.0/591	13.75/46.92	21.73/74.14	29.41/100.35	37.22/126.99	12.67/43.23	19.58/66.81	26.92/91.85	33.71/115.02

Air Velocity (m/s) (ft/min)	Performance （KW/Btu/h×1000）							
	R404A				R407C			
	△=10K/18°F	△=15K/27°F	△=20K/36°F	△=25K/45°F	△=10K/18°F	△=15K/27°F	△=20K/36°F	△=25K/45°F
1.0/197	5.52/18.83	8.41/28.69	11.29/38.52	14.45/49.3	3.7/12.62	6.85/23.37	9.81/33.47	12.74/43.47
1.5/295	7.8/26.61	11.92/40.67	16.47/56.2	20.78/70.9	5.19/17.71	9.73/33.2	13.99/47.73	18.19/62.06
2.0/394	9.82/33.51	15.57/53.12	21.01/71.69	26.53/90.52	6.51/22.21	12.32/42.04	17.74/60.53	23.5/80.18
2.5/492	11.64/39.72	18.6/63.46	25.17/85.88	31.79/108.47	7.69/26.24	14.68/50.09	21.2/72.33	28.18/96.15
3.0/591	13.28/45.31	21.41/73.05	28.97/98.85	36.63/124.98	8.75/29.86	16.84/57.46	24.93/85.06	32.48/110.82

Air Velocity (m/s) (ft/min)	Performance （KW/Btu/h×1000）							
	R290				R454B			
	△=10K/18°F	△=15K/27°F	△=20K/36°F	△=25K/45°F	△=10K/18°F	△=15K/27°F	△=20K/36°F	△=25K/45°F
1.0/197	5.43/18.54	8.25/28.15	11.04/37.69	13.82/47.16	5.09/17.37	7.99/27.26	10.87/37.09	13.77/46.98
1.5/295	7.72/26.36	11.76/40.12	15.76/53.79	19.75/67.41	7.27/24.81	11.44/39.03	15.58/53.16	20.01/68.27
2.0/394	9.78/33.37	14.93/50.94	20.04/68.39	25.52/87.10	9.24/31.53	14.57/49.71	20.2/68.92	25.67/87.59
2.5/492	11.65/39.75	17.81/60.80	23.94/81.70	30.54/104.22	11.05/37.7	17.46/59.57	24.28/82.84	30.91/105.46
3.0/591	13.37/45.62	20.47/69.87	28.12/95.95	35.21/120.14	12.72/43.4	20.4/69.6	28.1/95.88	35.81/122.18

Air-side Pressure Drop Data

Air velocity (m/s) / (ft/min)	Pressure drop (Pa)/ (inch H_2O)	Flow rate (m^3/h) / (cfm)
1.0/197	18.3/0.07	1788.84/1052.26
1.5/295	30.6/0.12	2683.26/1578.39
2.0/394	45.1/0.18	3577.68/2104.52
2.5/492	61.8/0.25	4472.1/2630.65
3.0/591	80.6/0.32	5366.52/3156.78

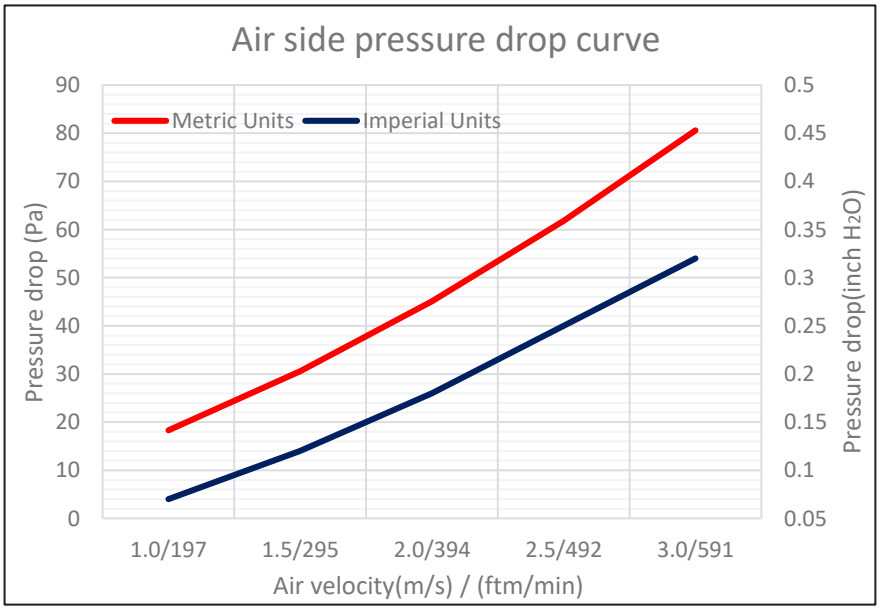

D1600-C CONDENSER COIL

Micro-Channel Heat Exchanger

Dimensional Drawing

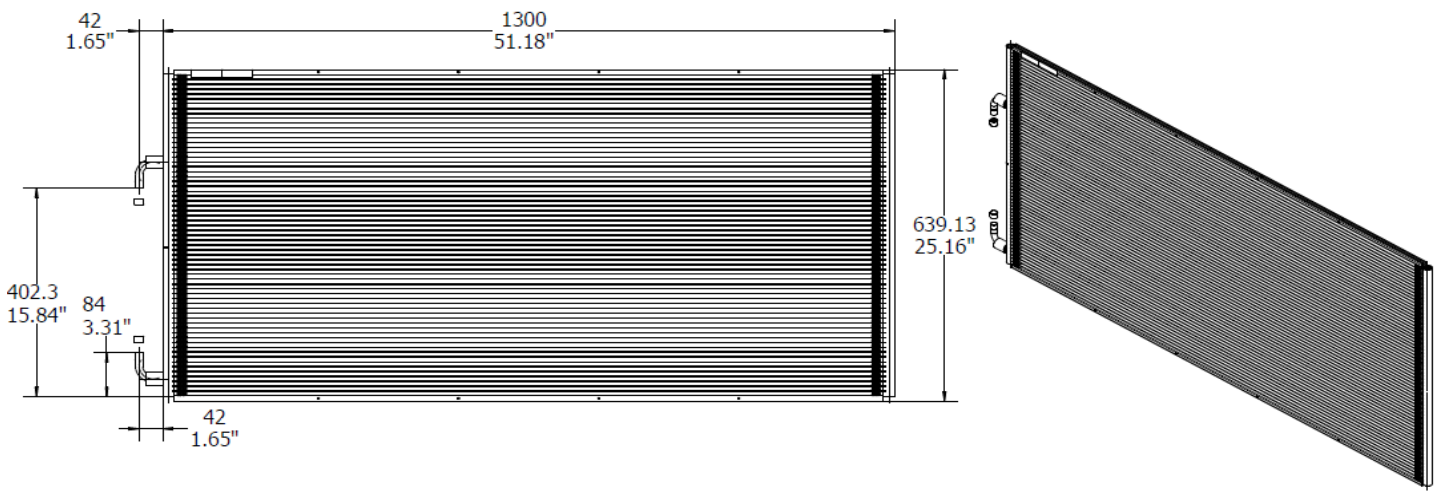

Parameters Table

Model Type	D1600-C	Platform	C116-23FPI
Coil Length	1300mm/51.18in	Coil Height	639.1mm/25.16in
Inlet Connection (ID)	12.9mm/0.51in	Outlet Connection (ID)	12.9mm/0.51in
Tube Width	16mm/0.63in	Tube Height	1.3mm/0.05in
Fin Width	16mm/0.63in	Fin Height	8.1mm/0.32in
Fin Pitch	1.1mm/23FPI	Manifold Diameter	20mm/0.79in
Num. of Tubes	65	Pass Distribution	35/30
Internal Volume	0.90L/54.92in^3	Coil Weight	5.98Kg/13.18 LB
PS	45Bar/ 652.7Psig	TS (Min ~ Max)	-40°C to 121°C/ -40°F to 250 °F
Ambient Temp. Range	-40°C to 72°C / -40°F to 161.6°F	Storage Temp. Range	-40°C to 121°C/ -40°F to 250 °F

Code NO.

Drawing NO.	IPACK	MPACK
DF0161	021U0099(I/15)	021U0096(M/8)
DF0161E	021U1536(I/15)	021U1304(M/8)

Material

Tube	9153	Manifold	3003
Fin	3003	Connecting Tube	Cu

Approval

PED	N/A (Not needed for this product)	UL	UL 207
Refrigerant	Group 1: R290, R32, R600, R600a, R1234yf, R444B, R454B, R452B, R447A, R454C, R454A. Group 2: R22, R134a, R404A, R407A, R407B, R407C, R410A, R507A, R1234ze, R513A, R448A, R449A, R407F, R452A, R450A, R422B, R422D, R438A, R1233zd(E), R449B, R407H, R513B. Note: R32 is available for MCHEs, but if customers request special PS & TS, please confirm with engineering team.		

Mounting Bars

Aluminum MCHEs expand and contract when exposed to big temperature changes. Installation supports/brackets must allow the MCHE to move in two dimensions;

Performance Data （Typical Refrigerant Application）

Air Velocity (m/s) (ft/min)	Performance （KW/Btu/h×1000）							
	R410A				R134a			
	△=10K/18°F	△=15K/27°F	△=20K/36°F	△=25K/45°F	△=10K/18°F	△=15K/27°F	△=20K/36°F	△=25K/45°F
1.0/197	7.99/27.26	12.15/41.46	16.6/56.64	20.93/71.41	7.42/25.32	11.33/38.66	15.26/52.07	19.4/66.19
1.5/295	11.02/37.6	17.16/58.55	23.13/78.92	29.19/99.6	10/34.12	15.36/52.41	20.98/71.58	26.13/89.16
2.0/394	13.64/46.54	21.4/73.02	28.84/98.4	36.4/124.2	12.12/41.35	18.68/63.74	25.15/85.81	31.71/108.19
2.5/492	16.41/55.99	25.12/85.71	33.89/115.63	42.78/145.97	13.91/47.46	21.48/73.29	28.81/98.3	36.32/123.92
3.0/591	18.6/63.46	28.48/97.17	38.39/130.99	48.49/165.45	15.44/52.68	24.27/82.81	31.89/108.81	40.24/137.3

Air Velocity (m/s) (ft/min)	Performance （KW/Btu/h×1000）							
	R404A				R407C			
	△=10K/18°F	△=15K/27°F	△=20K/36°F	△=25K/45°F	△=10K/18°F	△=15K/27°F	△=20K/36°F	△=25K/45°F
1.0/197	7.83/26.72	12.23/41.73	16.46/56.16	20.74/70.76	5.22/17.81	9.77/33.34	14.03/47.87	18.43/62.88
1.5/295	10.65/36.34	16.83/57.42	22.68/77.38	28.59/97.55	7.02/23.95	13.39/45.69	19.51/66.57	25.43/86.77
2.0/394	13.62/46.47	20.74/70.76	27.92/95.26	35.26/120.31	8.51/29.04	16.45/56.13	24.08/82.16	31.39/107.1
2.5/492	15.73/53.67	24.09/82.2	32.46/110.75	40.98/139.82	9.75/33.27	19.53/66.64	28.01/95.57	36.55/124.71
3.0/591	17.67/60.29	27.03/92.23	36.41/124.23	45.97/156.85	10.81/36.88	21.85/74.55	31.46/107.34	41.05/140.06

Air Velocity (m/s) (ft/min)	Performance （KW/Btu/h×1000）							
	R290				R454B			
	△=10K/18°F	△=15K/27°F	△=20K/36°F	△=25K/45°F	△=10K/18°F	△=15K/27°F	△=20K/36°F	△=25K/45°F
1.0/197	7.63/26.03	11.61/39.61	15.56/53.09	19.76/67.42	7.34/25.05	11.51/39.28	15.82/53.99	20.08/68.52
1.5/295	10.46/35.69	15.97/54.49	21.79/74.35	27.19/92.77	10.14/34.60	16.19/55.25	22.04/75.20	27.99/95.51
2.0/394	12.89/43.98	19.7/67.22	26.72/91.17	33.58/114.57	12.56/42.86	20.10/68.61	27.46/93.70	34.87/119.00
2.5/492	14.99/51.15	23.45/80.01	31.11/106.15	39.11/133.44	14.69/50.13	23.61/80.58	32.24/110.02	40.96/139.78
3.0/591	16.85/57.49	26.04/88.85	34.95/119.25	43.93/149.89	16.61/56.68	26.75/91.28	36.50/124.57	46.41/158.38

Air-side Pressure Drop Data

Air velocity (m/s) / (ft/min)	Pressure drop (Pa)/ (inch H_2O)	Flow rate (m^3/h) / (cfm)
1.0/197	13.4/0.05	2785.95/1638.79
1.5/295	22.5/0.09	4178.93/2458.19
2.0/394	33.10/0.13	5571.9/3277.59
2.5/492	45.2/0.18	6964.88/4096.99
3.0/591	58.8/0.24	8357.85/4916.38

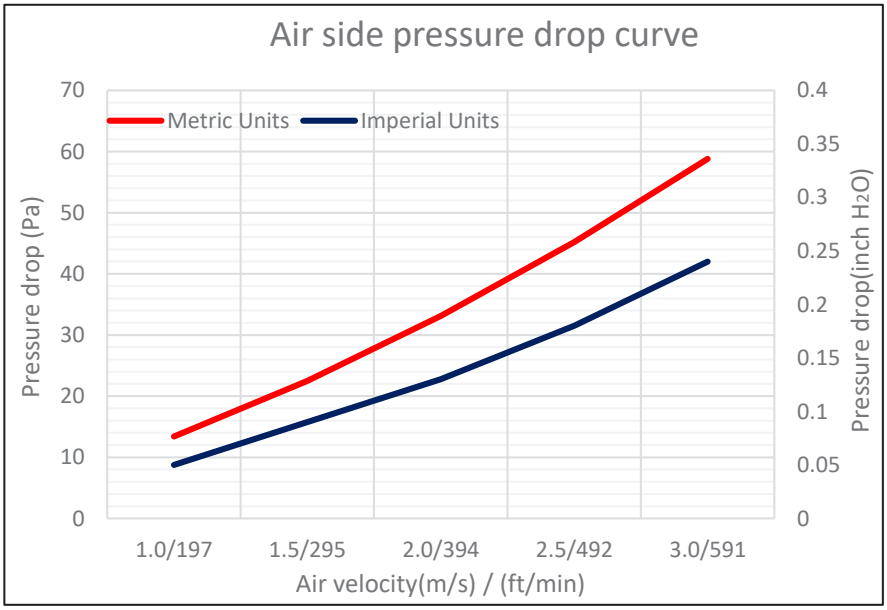

D1700-C CONDENSER COIL

Micro-Channel Heat Exchanger

Dimensional Drawing

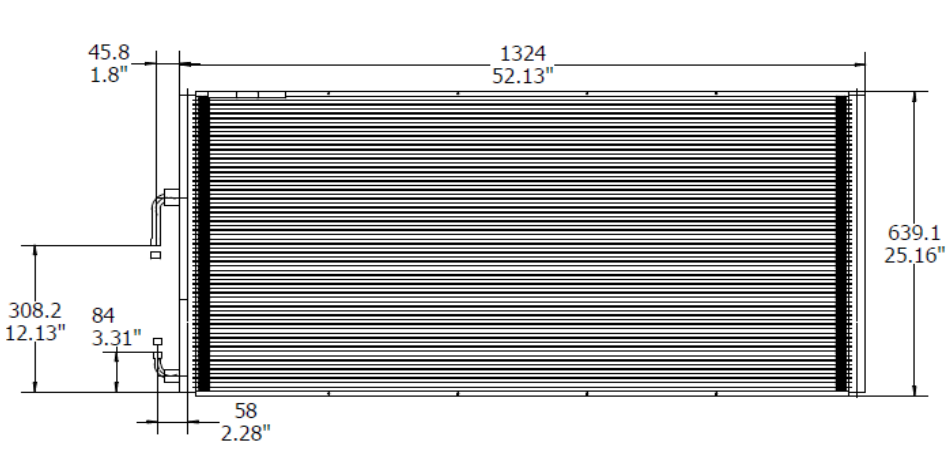

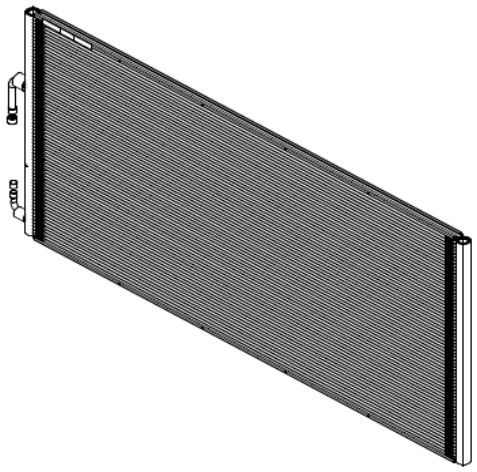

Parameters Table

Model Type	D1700-C	Platform	C125-23FPI
Coil Length	1324mm/52.13in	Coil Height	639.1mm/25.16in
Inlet Connection (ID)	16.1 mm/0.63in	Outlet Connection (ID)	12.9mm/0.51in
Tube Width	25.4mm/1 in	Tube Height	1.3mm/0.05in
Fin Width	25.4mm/1 in	Fin Height	8.1mm/0.32in
Fin Pitch	1.1mm/23FPI	Manifold Diameter	32mm/1.26in
Num. of Tubes	65	Pass Distribution	45/20
Internal Volume	1.63L/99.47in^3	Coil Weight	9.87Kg/21.75LB
PS	45Bar/ 652.7Psig	TS (Min ~ Max)	-40°C to 121°C/ -40°F to 250 °F
Ambient Temp. Range	-40°C to 72°C / -40°F to 161.6°F	Storage Temp. Range	-40°C to 121°C/ -40°F to 250 °F

Code NO.

Drawing NO.	IPACK	MPACK
DF0091	021U0092(I/12)	021U0085(M/8)
DF0091E	021U1529(I/12)	021U1297(M/8)

Material

Tube	9153	Manifold	3003
Fin	3003	Connecting Tube	Cu

Approval

PED	PED Cat I (Group 2)/ Cat II (Group 1)	UL	UL 207
Refrigerant	Group 1: R290, R32, R600, R600a, R1234yf, R444B, R454B, R452B, R447A, R454C, R454A. Group 2: R22, R134a, R404A, R407A, R407B, R407C, R410A, R507A, R1234ze, R513A, R448A, R449A, R407F, R452A, R450A, R422B, R422D, R438A, R1233zd(E), R449B, R407H, R513B. Note: R32 is available for MCHEs, but if customers request special PS & TS, please confirm with engineering team.		

Mounting Bars

Aluminum MCHEs expand and contract when exposed to big temperature changes. Installation supports/brackets must allow the MCHE to move in two dimensions;

Performance Data （Typical Refrigerant Application）

Air Velocity (m/s) (ft/min)	Performance （KW/Btu/h×1000）							
	R410A				R134a			
	△=10K/18°F	△=15K/27°F	△=20K/36°F	△=25K/45°F	△=10K/18°F	△=15K/27°F	△=20K/36°F	△=25K/45°F
1.0/197	8.66/29.55	13.17/44.94	17.88/61.01	22.5/76.77	8.31/28.35	12.64/43.13	16.94/57.8	21.37/72.91
1.5/295	12.36/42.17	19.13/65.27	25.77/87.93	32.45/110.72	11.72/39.99	17.91/61.11	24.27/82.81	30.53/104.17
2.0/394	16.01/54.63	24.53/83.7	32.98/112.53	41.6/141.94	14.74/50.29	22.6/77.11	30.76/104.95	38.75/132.22
2.5/492	19.25/65.68	29.5/100.65	39.7/135.46	50.06/170.8	17.44/59.51	27.16/92.67	36.62/124.95	45.81/156.3
3.0/591	22.26/75.95	34.03/116.11	45.89/156.58	57.95/197.73	19.88/67.83	31.08/106.04	41.98/143.24	52.35/178.62

Air Velocity (m/s) (ft/min)	Performance （KW/Btu/h×1000）							
	R404A				R407C			
	△=10K/18°F	△=15K/27°F	△=20K/36°F	△=25K/45°F	△=10K/18°F	△=15K/27°F	△=20K/36°F	△=25K/45°F
1.0/197	8.64/29.48	13.36/45.58	17.95/61.25	22.55/76.94	5.81/19.82	10.71/36.54	15.33/52.31	20.04/68.38
1.5/295	12.2/41.63	19.13/65.27	25.7/87.69	32.36/110.41	8.16/27.84	15.24/52	22.14/75.54	28.81/98.3
2.0/394	15.9/54.25	24.41/83.29	32.75/111.74	41.27/140.81	10.21/34.84	19.27/65.75	28.26/96.42	36.68/125.15
2.5/492	19.04/64.96	29.09/99.26	39.18/133.68	49.39/168.52	12.04/41.08	23.48/80.11	33.87/115.56	43.92/149.86
3.0/591	21.91/74.76	33.41/113.99	44.95/153.37	56.83/193.9	13.68/46.68	27.05/92.29	39.05/133.24	50.58/172.58

Air Velocity (m/s) (ft/min)	Performance （KW/Btu/h×1000）							
	R290				R454B			
	△=10K/18°F	△=15K/27°F	△=20K/36°F	△=25K/45°F	△=10K/18°F	△=15K/27°F	△=20K/36°F	△=25K/45°F
1.0/197	8.51/29.05	12.89/44.00	17.24/58.84	21.71/74.10	7.98/27.23	12.5/42.65	17.08/58.28	21.67/73.94
1.5/295	12.10/41.31	18.39/62.75	24.88/84.90	31.21/106.51	11.39/38.86	18.07/61.65	24.64/84.07	31.22/106.52
2.0/394	15.34/52.37	23.63/80.65	31.77/108.41	39.88/136.10	14.5/49.47	23.15/78.99	31.59/107.79	40.05/136.65
2.5/492	18.28/62.39	28.37/96.81	38.09/130.00	47.64/162.56	17.35/59.2	27.85/95.02	37.94/129.45	48.2/164.46
3.0/591	20.98/71.61	32.67/111.48	43.94/149.93	54.86/187.22	20.39/69.57	32.24/110	43.89/149.75	55.8/190.39

Air-side Pressure Drop Data

Air velocity (m/s) / (ft/min)	Pressure drop (Pa)/ (inch H_2O)	Flow rate (m^3/h) / (cfm)
1.0/197	18.3/0.07	2785.9/1638.76
1.5/295	30.6/0.12	4178.93/2458.19
2.0/394	45.1/0.18	5571.9/3277.59
2.5/492	61.8/0.25	6964.87/4096.98
3.0/591	80.6/0.32	8357.85/4916.38

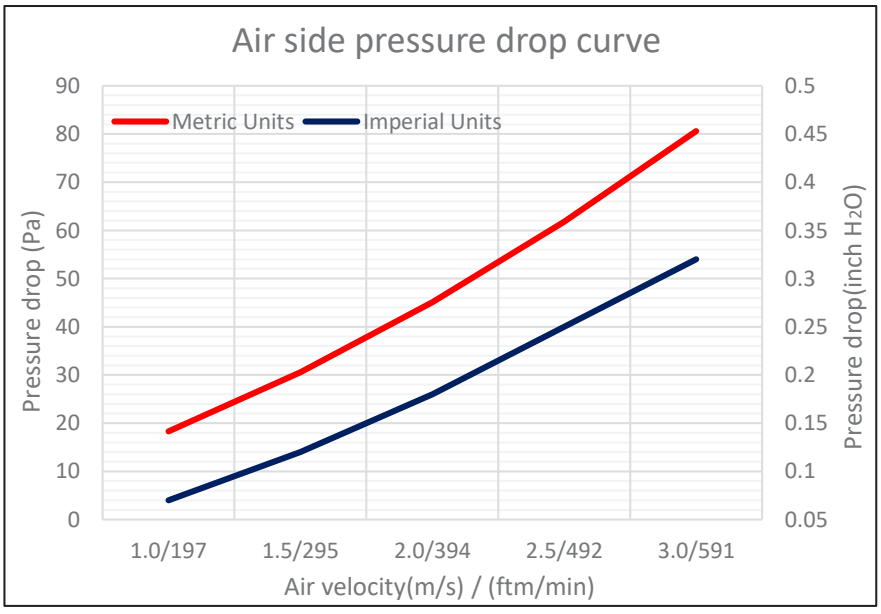

D1800-C CONDENSER COIL

Micro-Channel Heat Exchanger

Dimensional Drawing

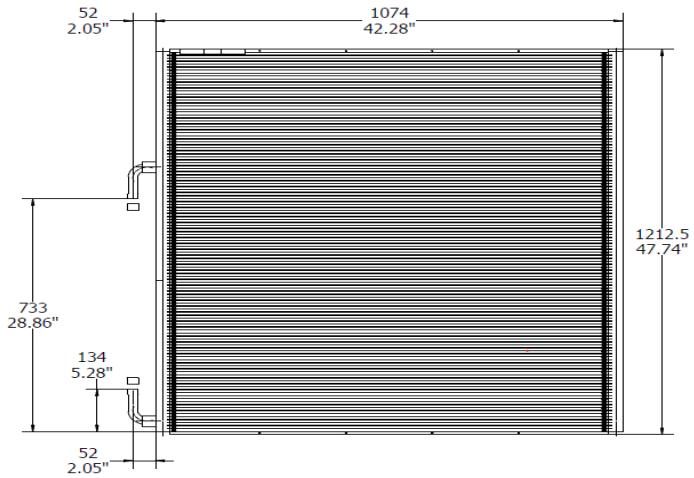

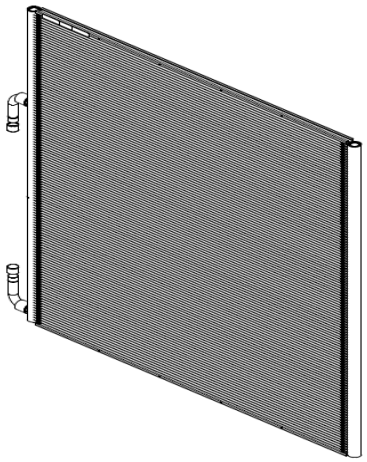

Parameters Table

Model Type	D1800-C	Platform	C125-23FPI
Coil Length	1074mm/42.28 in	Coil Height	1212.5mm/47.74in
Inlet Connection (ID)	22.4 mm/0.88in	Outlet Connection (ID)	22.4 mm/0.88in
Tube Width	25.4mm/1 in	Tube Height	1.3mm/0.05in
Fin Width	25.4mm/1 in	Fin Height	8.1mm/0.32in
Fin Pitch	1.1mm/23FPI	Manifold Diameter	32mm/1.26in
Num. of Tubes	126	Pass Distribution	76/50
Internal Volume	2.79L/170.26in^3	Coil Weight	15.28Kg/33.70LB
PS	45Bar/ 652.7Psig	TS (Min ~ Max)	-40°C to 121°C/ -40°F to 250 °F
Ambient Temp. Range	-40°C to 72°C / -40°F to 161.6°F	Storage Temp. Range	-40°C to 121°C/ -40°F to 250 °F

Code NO.

Drawing NO.	IPACK	MPACK
DF0071	021U0097(I/12)	021U0094(M/8)
DF0071E	021U1527(I/12)	021U1295(M/8)

Material

Tube	9153	Manifold	3003
Fin	3003	Connecting Tube	Cu

Approval

PED	PED Cat I (Group 2)/ Cat II (Group 1)	UL	UL 207
Refrigerant	Group 1: R290, R32, R600, R600a, R1234yf, R444B, R454B, R452B, R447A, R454C, R454A. Group 2: R22, R134a, R404A, R407A, R407B, R407C, R410A, R507A, R1234ze, R513A, R448A, R449A, R407F, R452A, R450A, R422B, R422D, R438A, R1233zd(E), R449B, R407H, R513B. Note: R32 is available for MCHEs, but if customers request special PS & TS, please confirm with engineering team.		

Mounting Bars

Aluminum MCHEs expand and contract when exposed to big temperature changes. Installation supports/brackets must allow the MCHE to move in two dimensions;

Performance Data （Typical Refrigerant Application）

Air Velocity (m/s) (ft/min)	Performance （KW/Btu/h×1000）							
	R410A				R134a			
	△=10K/18°F	△=15K/27°F	△=20K/36°F	△=25K/45°F	△=10K/18°F	△=15K/27°F	△=20K/36°F	△=25K/45°F
1.0/197	13.27/45.28	20.25/69.09	27.19/92.77	34.64/118.19	12.81/43.71	19.5/66.53	26.16/89.26	32.8/111.91
1.5/295	18.92/64.56	28.92/98.68	39.64/135.25	49.98/170.53	18.09/61.72	27.66/94.38	37.2/126.93	46.72/159.41
2.0/394	24.03/81.99	37.61/128.33	50.8/173.33	64.18/218.98	22.79/77.76	34.97/119.32	47.12/160.77	60.21/205.44
2.5/492	28.69/97.89	45.3/154.56	61.18/208.75	77.34/263.88	27.02/92.19	41.56/141.8	57.01/194.52	71.99/245.63
3.0/591	32.99/112.56	52.36/178.65	70.86/241.77	89.68/305.99	30.84/105.23	47.55/162.24	65.58/223.76	82.09/280.09

Air Velocity (m/s) (ft/min)	Performance （KW/Btu/h×1000）							
	R404A				R407C			
	△=10K/18°F	△=15K/27°F	△=20K/36°F	△=25K/45°F	△=10K/18°F	△=15K/27°F	△=20K/36°F	△=25K/45°F
1.0/197	13.26/45.24	20.25/69.09	27.59/94.14	34.79/118.7	8.5/29	16.47/56.2	23.57/80.42	30.6/104.41
1.5/295	18.74/63.94	29.08/99.22	39.65/135.29	50.02/170.67	12.51/42.68	23.42/79.91	33.65/114.81	44.36/151.36
2.0/394	23.6/80.52	37.59/128.26	50.68/172.92	63.97/218.27	15.69/53.53	29.62/101.06	42.75/145.86	56.8/193.8
2.5/492	27.99/95.5	44.95/153.37	60.77/207.35	76.77/261.94	18.5/63.12	35.39/120.75	52.21/178.14	68.03/232.12
3.0/591	33.02/112.66	51.83/176.84	70.12/239.25	88.59/302.27	21.07/71.89	40.65/138.7	60.34/205.88	78.55/268.01

Air Velocity (m/s) (ft/min)	Performance （KW/Btu/h×1000）							
	R290				R454B			
	△=10K/18°F	△=15K/27°F	△=20K/36°F	△=25K/45°F	△=10K/18°F	△=15K/27°F	△=20K/36°F	△=25K/45°F
1.0/197	13.02/44.43	19.84/67.71	26.53/90.53	33.25/113.46	12.19/41.59	19.19/65.48	26.12/89.12	33.33/113.72
1.5/295	18.59/63.44	28.31/96.60	37.90/129.34	47.72/162.84	17.44/59.51	27.48/93.76	37.72/128.7	48.15/164.29
2.0/394	23.57/80.45	35.97/122.76	48.24/164.62	61.60/210.20	22.18/75.68	35.02/119.49	48.61/165.86	61.75/210.69
2.5/492	28.10/95.90	42.98/146.67	58.77/200.53	73.77/251.74	26.53/90.52	42.65/145.52	58.49/199.57	74.42/253.92
3.0/591	32.27/110.12	49.43/168.67	67.91/231.73	85.23/290.84	30.55/104.24	49.44/168.69	67.75/231.16	86.26/294.32

Air-side Pressure Drop Data

Air velocity (m/s) / (ft/min)	Pressure drop (Pa)/ (inch H_2O)	Flow rate (m^3/h) / (cfm)
1.0/197	18.3/0.07	4293/2525.29
1.5/295	30.6/0.12	6439.5/3787.94
2.0/394	45.1/0.18	8586/5050.59
2.5/492	61.8/0.25	10732.5/6313.24
3.0/591	80.6/0.32	12879/7575.88

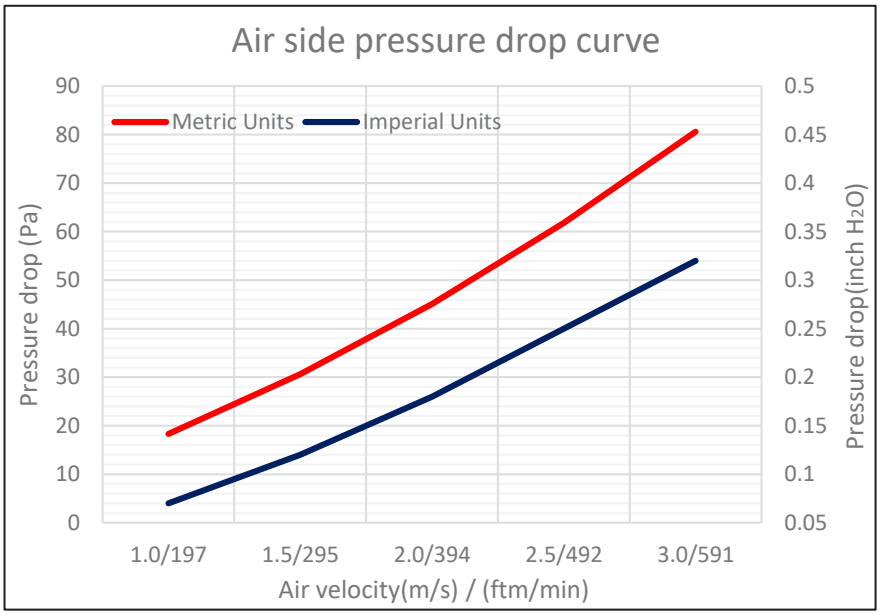

D1900-C CONDENSER COIL

Micro-Channel Heat Exchanger

Dimensional Drawing

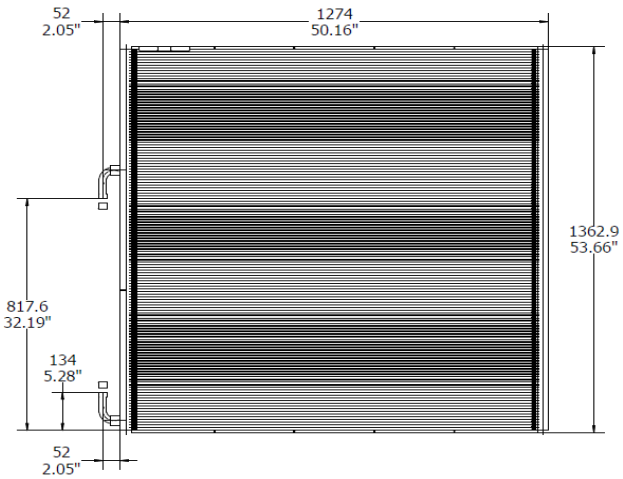

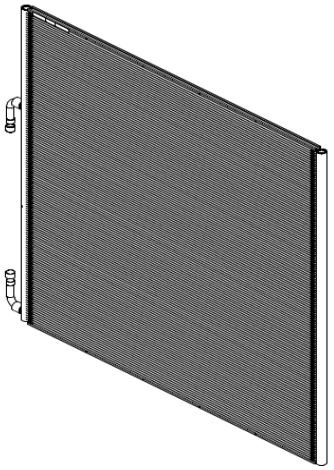

Parameters Table

Model Type	D1900-C	Platform	C125-23FPI
Coil Length	1274mm/50.16 in	Coil Height	1362.9mm/53.66in
Inlet Connection (ID)	22.4 mm/0.88in	Outlet Connection (ID)	22.4 mm/0.88in
Tube Width	25.4mm/1 in	Tube Height	1.3mm/0.05in
Fin Width	25.4mm/1 in	Fin Height	8.1mm/0.32in
Fin Pitch	1.1mm/23FPI	Manifold Diameter	32mm/1.26in
Num. of Tubes	142	Pass Distribution	90/52
Internal Volume	3.49L/212.97 in^3	Coil Weight	20.08Kg/44.27LB
PS	45Bar/ 652.7Psig	TS (Min ~ Max)	-40°C to 121°C/ -40°F to 250 °F
Ambient Temp. Range	-40°C to 72°C / -40°F to 161.6°F	Storage Temp. Range	-40°C to 121°C/ -40°F to 250 °F

Code NO.

Drawing NO.	IPACK	MPACK
DF0101	021U0093(I/12)	021U0086(M/8)
DF0101E	021U1530(I/12)	021U1298(M/8)

Material

Tube	9153	Manifold	3003
Fin	3003	Connecting Tube	Cu

Approval

PED	PED Cat I (Group 2)/ Cat II (Group 1)	UL	UL 207
Refrigerant	Group 1: R290, R32, R600, R600a, R1234yf, R444B, R454B, R452B, R447A, R454C, R454A. Group 2: R22, R134a, R404A, R407A, R407B, R407C, R410A, R507A, R1234ze, R513A, R448A, R449A, R407F, R452A, R450A, R422B, R422D, R438A, R1233zd(E), R449B, R407H, R513B. Note: R32 is available for MCHEs, but if customers request special PS & TS, please confirm with engineering team.		

Mounting Bars

Aluminum MCHEs expand and contract when exposed to big temperature changes. Installation supports/brackets must allow the MCHE to move in two dimensions;

Performance Data （Typical Refrigerant Application）

Air Velocity (m/s) (ft/min)	Performance （KW/Btu/h×1000）							
	R410A				R134a			
	△=10K/18°F	△=15K/27°F	△=20K/36°F	△=25K/45°F	△=10K/18°F	△=15K/27°F	△=20K/36°F	△=25K/45°F
1.0/197	18.1/61.76	27.5/93.83	37.27/127.17	46.91/160.06	17.33/59.13	26.34/89.87	35.31/120.48	44.27/151.05
1.5/295	25.81/88.06	39.93/136.24	53.68/183.16	67.65/230.82	24.42/83.32	37.28/127.2	50.11/170.98	63.59/216.97
2.0/394	32.78/111.85	51.12/174.42	68.76/234.61	86.71/295.85	30.68/104.68	47/160.36	64.08/218.64	80.63/275.11
2.5/492	40.18/137.09	61.34/209.29	82.7/282.17	104.36/356.08	36.25/123.69	55.72/190.12	76.24/260.13	95.23/324.92
3.0/591	46.35/158.15	70.93/242.01	95.65/326.36	120.72/411.9	41.28/140.85	64.53/220.18	87.27/297.77	108.75/371.06

Air Velocity (m/s) (ft/min)	Performance （KW/Btu/h×1000）							
	R404A				R407C			
	△=10K/18°F	△=15K/27°F	△=20K/36°F	△=25K/45°F	△=10K/18°F	△=15K/27°F	△=20K/36°F	△=25K/45°F
1.0/197	18.03/61.52	27.42/93.56	37.41/127.64	46.99/160.33	12.12/41.35	22.36/76.29	31.94/108.98	41.54/141.73
1.5/295	25.47/86.9	39.86/136	53.59/182.85	67.45/230.14	17.05/58.17	31.77/108.4	45.55/155.42	60.06/204.92
2.0/394	32.06/109.39	50.67/172.89	68.24/232.83	85.97/293.33	21.35/72.85	40.24/137.3	58.83/200.73	76.46/260.88
2.5/492	39.61/135.15	60.59/206.73	81.61/278.45	102.88/351.03	25.11/85.68	47.92/163.5	70.51/240.58	91.53/312.3
3.0/591	45.6/155.59	69.65/237.65	93.84/320.18	118.42/404.05	28.57/97.48	56.28/192.03	80.89/276	105.35/359.45

Air Velocity (m/s) (ft/min)	Performance （KW/Btu/h×1000）							
	R290				R454B			
	△=10K/18°F	△=15K/27°F	△=20K/36°F	△=25K/45°F	△=10K/18°F	△=15K/27°F	△=20K/36°F	△=25K/45°F
1.0/197	17.75/60.59	26.87/91.70	35.94/122.65	44.97/153.45	16.63/56.74	26.05/88.88	35.41/120.82	45.17/154.12
1.5/295	25.25/86.17	38.32/130.77	51.34/175.20	65.05/221.96	23.82/81.27	37.31/127.3	51.38/175.31	65.1/222.12
2.0/394	31.98/109.13	48.64/166.00	66.18/225.81	83.10/283.58	30.24/103.18	48.23/164.56	65.76/224.37	83.48/284.83
2.5/492	38.09/129.99	58.04/198.06	79.25/270.42	99.21/338.52	36.19/123.48	58.05/198.07	79.12/269.96	100.47/342.8
3.0/591	43.70/149.11	67.94/231.84	91.49/312.18	114.19/389.63	41.64/142.08	67.18/229.22	91.51/312.23	116.26/396.68

Air-side Pressure Drop Data

Air velocity (m/s) / (ft/min)	Pressure drop (Pa)/ (inch H_2O)	Flow rate (m^3/h) / (cfm)
1.0/197	18.3/0.07	5801.33/3412.55
1.5/295	30.6/0.12	8701.99/5118.82
2.0/394	45.1/0.18	11602.66/6825.09
2.5/492	61.8/0.25	14503.32/8531.36
3.0/591	80.6/0.32	17403.98/10237.64

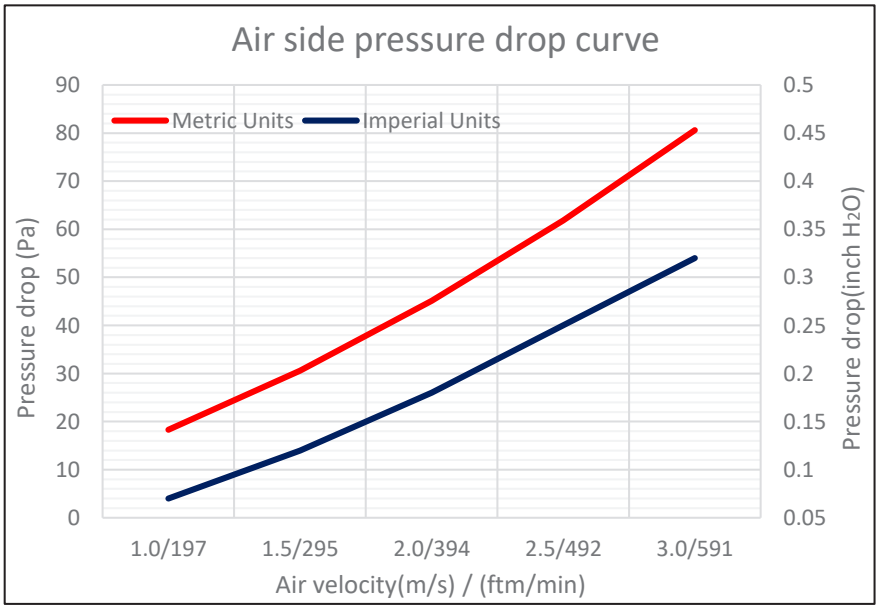

D2000-C CONDENSER COIL

Micro-Channel Heat Exchanger

Dimensional Drawing

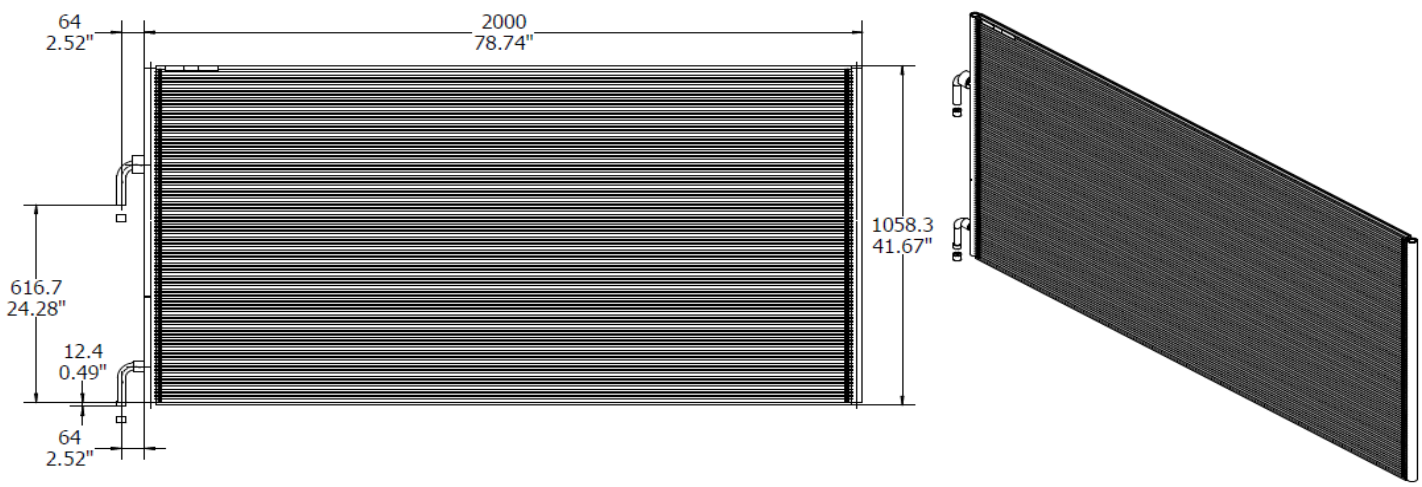

Parameters Table

Model Type	D2000-C	Platform	C625-23FPI
Coil Length	2000mm/78.74 in	Coil Height	1058.3mm/41.67in
Inlet Connection (OD)	25.4mm/1 in	Outlet Connection (ID)	22.4 mm/0.88in
Tube Width	25.4mm/1 in	Tube Height	2mm/0.08in
Fin Width	25.4mm/1 in	Fin Height	8.1mm/0.32in
Fin Pitch	1.1mm/23FPI	Manifold Diameter	32mm/1.26in
Num. of Tubes	102	Pass Distribution	70/32
Internal Volume	6.10L/372.25 in^3	Coil Weight	24.78Kg/54.63LB
PS	45Bar/ 652.7Psig	TS (Min ~ Max)	-40°C to 121°C/ -40°F to 250 °F
Ambient Temp. Range	-40°C to 72°C / -40°F to 161.6°F	Storage Temp. Range	-40°C to 121°C/ -40°F to 250 °F

Code NO.

Drawing NO.	IPACK	MPACK
DF0321	021U0265(I/23)	021U0264(M/15)
DF0321E	021U2100(I/23)	021U1305(M/15)

Material

Tube	9153	Manifold	3003
Fin	3003	Connecting Tube	Cu

Approval

PED	PED Cat II (Group 2)/ Cat III (Group 1)	UL	UL 207

Refrigerant	Group 1: R290, R32, R600, R600a, R1234yf, R444B, R454B, R452B, R447A, R454C, R454A. Group 2: R22, R134a, R404A, R407A, R407B, R407C, R410A, R507A, R1234ze, R513A, R448A, R449A, R407F, R452A, R450A, R422B, R422D, R438A, R1233zd(E), R449B, R407H, R513B. Note: R32 is available for MCHEs, but if customers request special PS & TS, please confirm with engineering team.

Aluminum MCHEs expand and contract when exposed to big temperature changes. Installation supports/brackets must allow the MCHE to move in two dimensions;

Performance Data （Typical Refrigerant Application）

Air Velocity (m/s) (ft/min)	Performance（KW/Btu/h×1000）							
	R410A				R134a			
	△=10K/18°F	△=15K/27°F	△=20K/36°F	△=25K/45°F	△=10K/18°F	△=15K/27°F	△=20K/36°F	△=25K/45°F
1.0/197	22.57/77.01	34.75/118.57	46.73/159.47	58.81/200.67	21.92/74.79	33.24/113.43	44.72/152.59	56.24/191.91
1.5/295	32.76/112.77	50.33/171.72	67.72/231.09	85.32/291.21	31.15/106.29	47.39/162.70	64.61/220.47	81.12/276.79
2.0/394	42.30/144.32	64.71/220.81	87.24/297.65	110.05/375.47	39.40/134.44	61.45/209.66	82.69/282.14	103.49/353.11
2.5/492	51.02/174.09	78.15/266.67	105.43/359.75	133.11/454.25	46.88/159.97	73.68/251.41	98.70/336.76	123.99/423.06
3.0/591	59.21/203.04	90.71/309.50	122.49/417.95	154.78/528.22	55.30/188.69	85.01/290.07	113.66/387.82	142.98/487.86

Air Velocity (m/s) (ft/min)	Performance（KW/Btu/h×1000）							
	R404A				R407C			
	△=10K/18°F	△=15K/27°F	△=20K/36°F	△=25K/45°F	△=10K/18°F	△=15K/27°F	△=20K/36°F	△=25K/45°F
1.0/197	22.45/76.60	35.02/119.49	46.99/160.36	59.10/201.65	15.19/51.83	27.98/95.48	40.44/137.99	52.52/179.21
1.5/295	32.97/112.50	50.53/172.41	67.98/231.96	85.49/291.72	21.36/72.88	39.92/136.22	58.46/199.47	75.89/258.95
2.0/394	42.26/144.19	64.64/220.57	87.15/297.36	109.83/374.77	26.77/91.33	52.16/177.97	75.11/256.28	97.51/332.70
2.5/492	50.75/173.18	77.84/265.60	104.83/357.69	132.38/451.71	31.70/108.18	62.81/214.31	90.29/308.08	117.53/401.03
3.0/591	58.59/199.92	90.00/307.10	121.50/414.57	153.46/523.65	36.08/123.09	72.72/248.15	104.52/356.62	136.11/464.44

Air Velocity (m/s) (ft/min)	Performance（KW/Btu/h×1000）							
	R290				R454B			
	△=10K/18°F	△=15K/27°F	△=20K/36°F	△=25K/45°F	△=10K/18°F	△=15K/27°F	△=20K/36°F	△=25K/45°F
1.0/197	22.32/76.19	33.76/115.21	45.49/155.23	56.98/194.44	20.79/70.96	32.55/111.06	44.69/152.48	56.64/193.27
1.5/295	31.88/108.78	49.07/167.46	65.86/224.74	82.50/281.51	29.78/101.63	47.52/162.16	64.79/221.08	82.14/280.27
2.0/394	40.58/138.49	62.96/214.83	84.67/288.93	105.93/361.45	38.08/129.92	61.19/209.77	83.43/284.67	105.91/361.39
2.5/492	48.51/165.54	75.90/259.00	101.88/347.66	127.87/436.31	46.81/159.73	73.88/252.08	100.85/344.13	128.14/437.22
3.0/591	57.60/196.55	88.00/300.27	118.05/402.81	148.25/505.86	54.26/185.15	85.70/292.40	117.19/399.88	148.96/508.27

Air-side Pressure Drop Data

Air velocity (m/s) / (ft/min)	Pressure drop (Pa)/ (inch H_2O)	Flow rate (m^3/h) / (cfm)
1.0/197	20.9/0.08	7199.16/4234.8
1.5/295	34.7/0.14	10798.74/6352.2
2.0/394	50.7/0.2	14398.31/8469.59
2.5/492	68.9/0.28	17997.89/10586.99
3.0/591	89.4/0.36	21597.47/12704.39

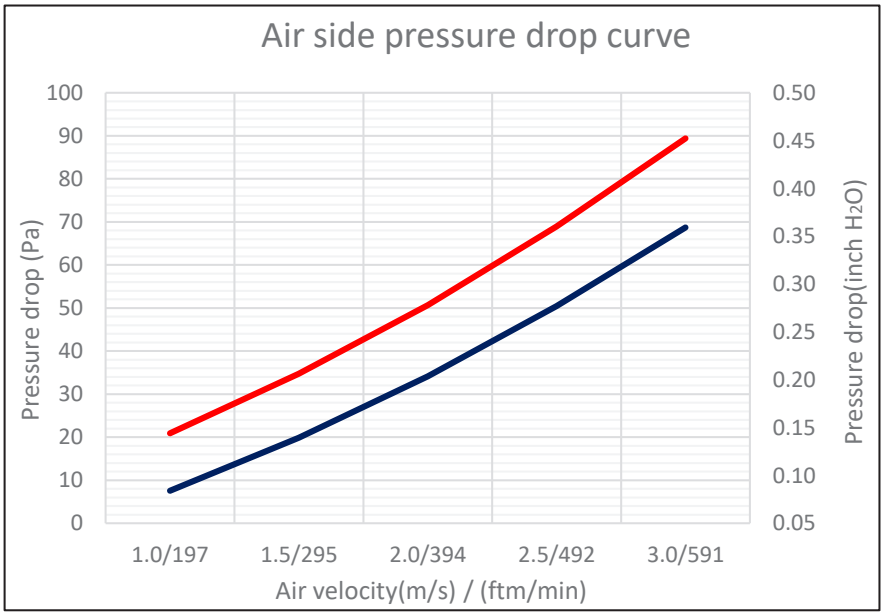

D2100-C CONDENSER COIL

Micro-Channel Heat Exchanger

Dimensional Drawing

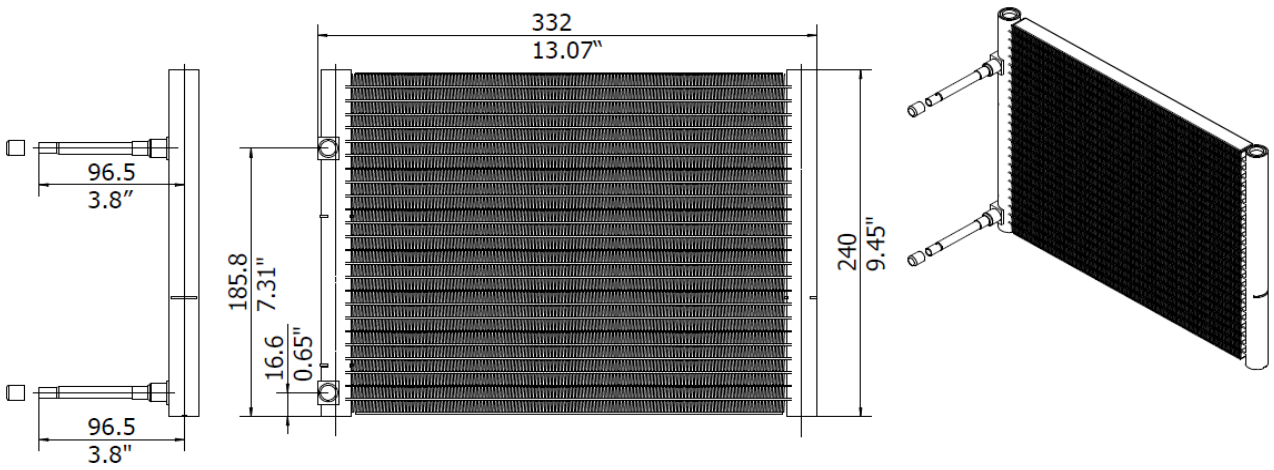

Parameters Table

Model Type	D2100-C	Platform	C116-23FPI
Coil Length	332mm/13.07in	Coil Height	240mm/9.45in
Inlet Connection (ID)	6.15mm/0.24in	Outlet Connection (ID)	6.15mm/0.24in
Tube Width	16mm/0.63in	Tube Height	1.3mm/0.05in
Fin Width	16mm/0.63in	Fin Height	8.1mm/0.32in
Fin Pitch	1.1mm/23FPI	Manifold Diameter	20mm/0.79in
Num. of Tubes	24	Pass Distribution	10/6/5/3
Internal Volume	0.15L/9.15in^3	Coil Weight	0.64Kg/1.41LB
PS	45Bar/ 652.7Psig	TS (Min ~ Max)	-40°C to 121°C/ -40°F to 250 °F
Ambient Temp. Range	-40°C to 72°C / -40°F to 161.6°F	Storage Temp. Range	-40°C to 121°C/ -40°F to 250 °F

Code NO.

Drawing NO.	IPACK	MPACK
DM0010	021U0341(I/48)	021U0510(M/24)

Material

Tube	9153	Manifold	3003
Fin	3003	Connecting Tube	Cu

Approval

PED	N/A (Not needed for this product)	UL	UL 207
Refrigerant	Group 1: R290, R32, R600, R600a, R1234yf, R444B, R454B, R452B, R447A, R454C, R454A. Group 2: R22, R134a, R404A, R407A, R407B, R407C, R410A, R507A, R1234ze, R513A, R448A, R449A, R407F, R452A, R450A, R422B, R422D, R438A, R1233zd(E), R449B, R407H, R513B. Note: R32 is available for MCHEs, but if customers request special PS & TS, please confirm with engineering team.		

Mounting Bars

Aluminum MCHEs expand and contract when exposed to big temperature changes. Installation supports/brackets must allow the MCHE to move in two dimensions;

Performance Data（Typical Refrigerant Application）

Air Velocity (m/s) (ft/min)	Performance（KW/Btu/h×1000）							
	R410A				R134a			
	△=10K/18°F	△=15K/27°F	△=20K/36°F	△=25K/45°F	△=10K/18°F	△=15K/27°F	△=20K/36°F	△=25K/45°F
1.0/197	0.55/1.88	0.95/3.24	1.34/4.57	1.71/5.83	0.54/1.84	0.93/3.17	1.27/4.34	1.61/5.49
1.5/295	0.71/2.42	1.36/4.64	1.88/6.41	2.41/8.22	0.81/2.76	1.29/4.4	1.75/5.97	2.29/7.81
2.0/394	1.02/3.48	1.71/5.83	2.36/8.05	3.02/10.3	1.01/3.45	1.59/5.43	2.25/7.68	2.88/9.83
2.5/492	1.2/4.09	2.03/6.93	2.81/9.59	3.59/12.25	1.18/4.03	1.87/6.38	2.66/9.08	3.42/11.67
3.0/591	1.54/5.25	2.32/7.92	3.21/10.95	4.11/14.02	1.33/4.54	2.16/7.37	3.04/10.37	3.91/13.34

Air Velocity (m/s) (ft/min)	Performance（KW/Btu/h×1000）							
	R404A				R407C			
	△=10K/18°F	△=15K/27°F	△=20K/36°F	△=25K/45°F	△=10K/18°F	△=15K/27°F	△=20K/36°F	△=25K/45°F
1.0/197	0.54/1.84	0.94/3.21	1.33/4.54	1.7/5.8	0.37/1.26	0.75/2.56	1.11/3.79	1.49/5.08
1.5/295	0.82/2.8	1.36/4.64	1.87/6.38	2.38/8.12	0.48/1.64	1.04/3.55	1.54/5.25	2.1/7.17
2.0/394	0.99/3.38	1.7/5.8	2.34/7.98	2.99/10.2	0.57/1.94	1.28/4.37	1.98/6.76	2.64/9.01
2.5/492	1.24/4.23	2/6.82	2.77/9.45	3.54/12.08	0.62/2.12	1.5/5.12	2.35/8.02	3.11/10.61
3.0/591	1.42/4.85	2.29/7.81	3.18/10.85	4.05/13.82	0.81/2.76	1.7/5.8	2.68/9.14	3.56/12.15

Air Velocity (m/s) (ft/min)	Performance（KW/Btu/h×1000）							
	R290				R454B			
	△=10K/18°F	△=15K/27°F	△=20K/36°F	△=25K/45°F	△=10K/18°F	△=15K/27°F	△=20K/36°F	△=25K/45°F
1.0/197	0.56/1.91	0.93/3.17	1.27/4.33	1.61/5.49	0.51/1.76	0.79/2.71	1.25/4.27	1.63/5.59
1.5/295	0.74/2.52	1.29/4.4	1.76/6.01	2.29/7.81	0.67/2.29	1.24/4.25	1.78/6.09	2.30/7.85
2.0/394	1.01/3.45	1.61/5.49	2.27/7.75	2.88/9.83	0.80/2.73	1.59/5.45	2.24/7.64	2.89/9.87
2.5/492	1.19/4.06	1.89/6.45	2.68/9.14	3.42/11.67	1.10/3.77	1.89/6.46	2.65/9.06	3.43/11.71
3.0/591	1.34/4.57	2.23/7.61	3.06/10.44	3.91/13.34	1.25/4.29	2.16/7.40	3.04/10.37	3.92/13.40

Air-side Pressure Drop Data

Air velocity (m/s) / (ft/min)	Pressure drop (Pa)/ (inch H_2O)	Flow rate (m^3/h) / (cfm)
1.0/197	13.4/0.05	235.57/138.57
1.5/295	22.5/0.09	353.35/207.85
2.0/394	33.10/0.13	471.14/277.14
2.5/492	45.2/0.18	588.92/346.42
3.0/591	58.8/0.24	706.71/415.71

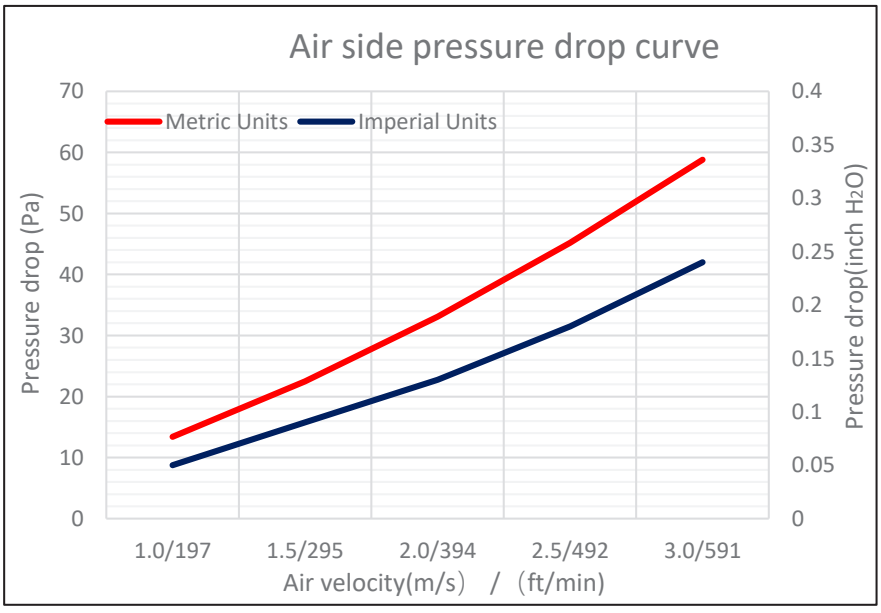

D2200-C CONDENSER COIL

Micro-Channel Heat Exchanger

Dimensional Drawing

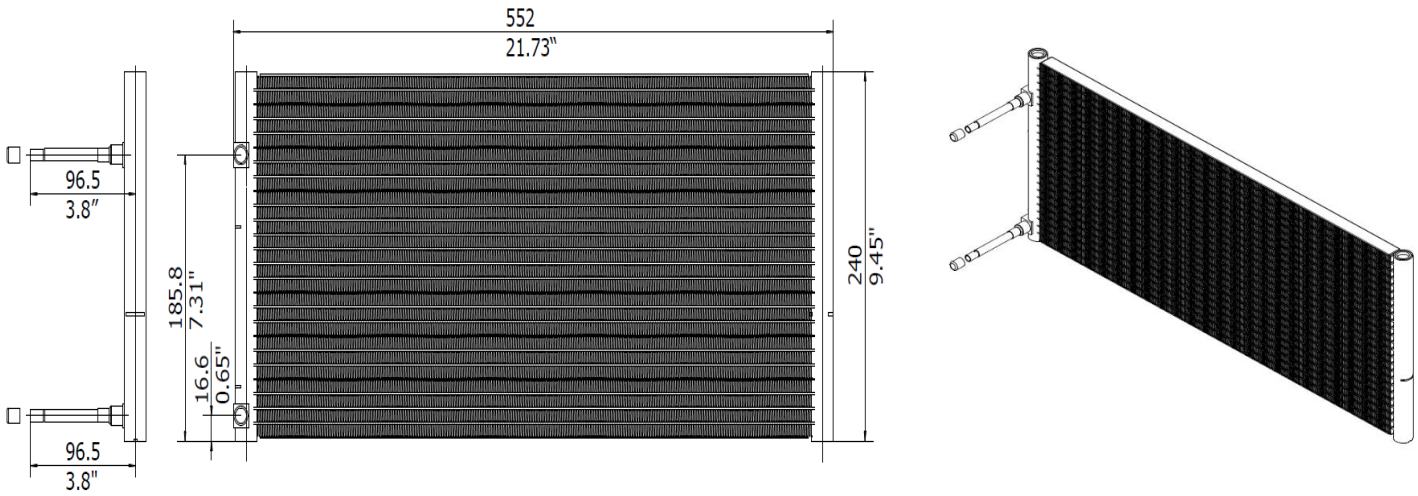

Parameters Table

Model Type	D2200-C	Platform	C116-23FPI
Coil Length	552mm/21.73in	Coil Height	240mm/9.45in
Inlet Connection (ID)	6.15mm/0.24in	Outlet Connection (ID)	6.15mm/0.24in
Tube Width	16mm/0.63in	Tube Height	1.3mm/0.05in
Fin Width	16mm/0.63in	Fin Height	8.1mm/0.32in
Fin Pitch	1.1mm/23FPI	Manifold Diameter	20mm/0.79in
Num. of Tubes	24	Pass Distribution	10/6/5/3
Internal Volume	0.19L/11.59 in^3	Coil Weight	1.00Kg/2.21LB
PS	45Bar/ 652.7Psig	TS (Min ~ Max)	-40°C to 121°C/ -40°F to 250 °F
Ambient Temp. Range	-40°C to 72°C / -40°F to 161.6°F	Storage Temp. Range	-40°C to 121°C/ -40°F to 250 °F

Code NO.

Drawing NO.	IPACK	MPACK
DM0020	021U0342(I/32)	021U0509(M/16)

Material

Tube	9153	Manifold	3003
Fin	3003	Connecting Tube	Cu

Approval

PED	N/A (Not needed for this product)	UL	UL 207
Refrigerant	Group 1: R290, R32, R600, R600a, R1234yf, R444B, R454B, R452B, R447A, R454C, R454A. Group 2: R22, R134a, R404A, R407A, R407B, R407C, R410A, R507A, R1234ze, R513A, R448A, R449A, R407F, R452A, R450A, R422B, R422D, R438A, R1233zd(E), R449B, R407H, R513B. Note: R32 is available for MCHEs, but if customers request special PS & TS, please confirm with engineering team.		

Mounting Bars

Aluminum MCHEs expand and contract when exposed to big temperature changes. Installation supports/brackets must allow the MCHE to move in two dimensions;

Performance Data （Typical Refrigerant Application）

Air Velocity (m/s) (ft/min)	Performance （KW/Btu/h×1000）							
	R410A				R134a			
	△=10K/18°F	△=15K/27°F	△=20K/36°F	△=25K/45°F	△=10K/18°F	△=15K/27°F	△=20K/36°F	△=25K/45°F
1.0/197	1.17/3.99	1.85/6.31	2.5/8.53	3.15/10.75	1.11/3.79	1.74/5.94	2.38/8.12	2.96/10.1
1.5/295	1.67/5.7	2.59/8.84	3.51/11.98	4.42/15.08	1.54/5.25	2.44/8.33	3.3/11.26	4.09/13.96
2.0/394	2.1/7.17	3.24/11.05	4.39/14.98	5.56/18.97	1.9/6.48	3.04/10.37	4.09/13.96	5.09/17.37
2.5/492	2.48/8.46	3.84/13.1	5.2/17.74	6.59/22.49	2.21/7.54	3.57/12.18	4.78/16.31	5.94/20.27
3.0/591	2.82/9.62	4.37/14.91	5.93/20.23	7.53/25.69	2.55/8.7	4.03/13.75	5.41/18.46	6.71/22.89

Air Velocity (m/s) (ft/min)	Performance （KW/Btu/h×1000）							
	R404A				R407C			
	△=10K/18°F	△=15K/27°F	△=20K/36°F	△=25K/45°F	△=10K/18°F	△=15K/27°F	△=20K/36°F	△=25K/45°F
1.0/197	1.14/3.89	1.82/6.21	2.46/8.39	3.1/10.58	0.75/2.56	1.43/4.88	2.11/7.2	2.76/9.42
1.5/295	1.64/5.6	2.53/8.63	3.42/11.67	4.33/14.77	1.02/3.48	2.03/6.93	2.95/10.07	3.85/13.14
2.0/394	2.04/6.96	3.15/10.75	4.27/14.57	5.41/18.46	1.25/4.27	2.54/8.67	3.68/12.56	4.81/16.41
2.5/492	2.39/8.15	3.71/12.66	5.03/17.16	6.37/21.73	1.44/4.91	2.99/10.2	4.34/14.81	5.67/19.35
3.0/591	2.72/9.28	4.21/14.36	5.71/19.48	7.24/24.7	1.61/5.49	3.41/11.63	4.93/16.82	6.45/22.01

Air Velocity (m/s) (ft/min)	Performance （KW/Btu/h×1000）							
	R290				R454B			
	△=10K/18°F	△=15K/27°F	△=20K/36°F	△=25K/45°F	△=10K/18°F	△=15K/27°F	△=20K/36°F	△=25K/45°F
1.0/197	1.14/3.89	1.75/5.97	2.39/8.15	3.01/10.27	1.07/3.65	1.72/5.89	2.37/8.09	3.01/10.29
1.5/295	1.57/5.36	2.48/8.46	3.34/11.4	4.2/14.33	1.48/5.07	2.42/8.27	3.31/11.32	4.23/14.43
2.0/394	1.95/6.65	3.1/10.58	4.17/14.23	5.27/17.98	1.90/6.48	3.03/10.35	4.16/14.21	5.31/18.12
2.5/492	2.36/8.05	3.66/12.49	4.92/16.79	6.2/21.15	2.25/7.67	3.58/12.24	4.92/16.80	6.28/21.45
3.0/591	2.71/9.25	4.15/14.16	5.6/19.11	7.06/24.09	2.57/8.77	4.09/13.97	5.61/19.17	7.28/24.84

Air-side Pressure Drop Data

Air velocity (m/s) / (ft/min)	Pressure drop (Pa)/ (inch H_2O)	Flow rate (m^3/h) / (cfm)
1.0/197	13.4/0.05	422.34/248.44
1.5/295	22.5/0.09	633.51/372.65
2.0/394	33.10/0.13	844.68/496.87
2.5/492	45.2/0.18	1055.86/621.09
3.0/591	58.8/0.24	1267.03/745.31

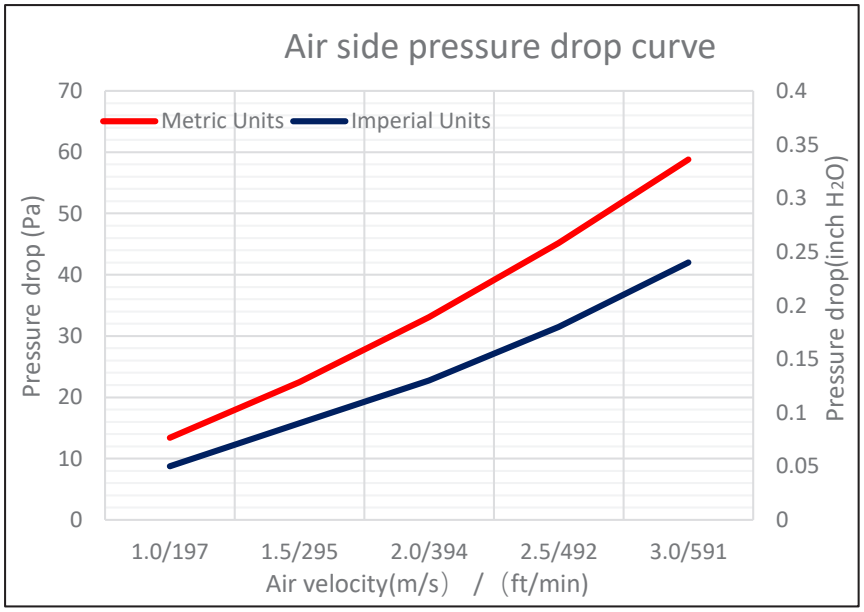

D2300-C CONDENSER COIL

Micro-Channel Heat Exchanger

Dimensional Drawing

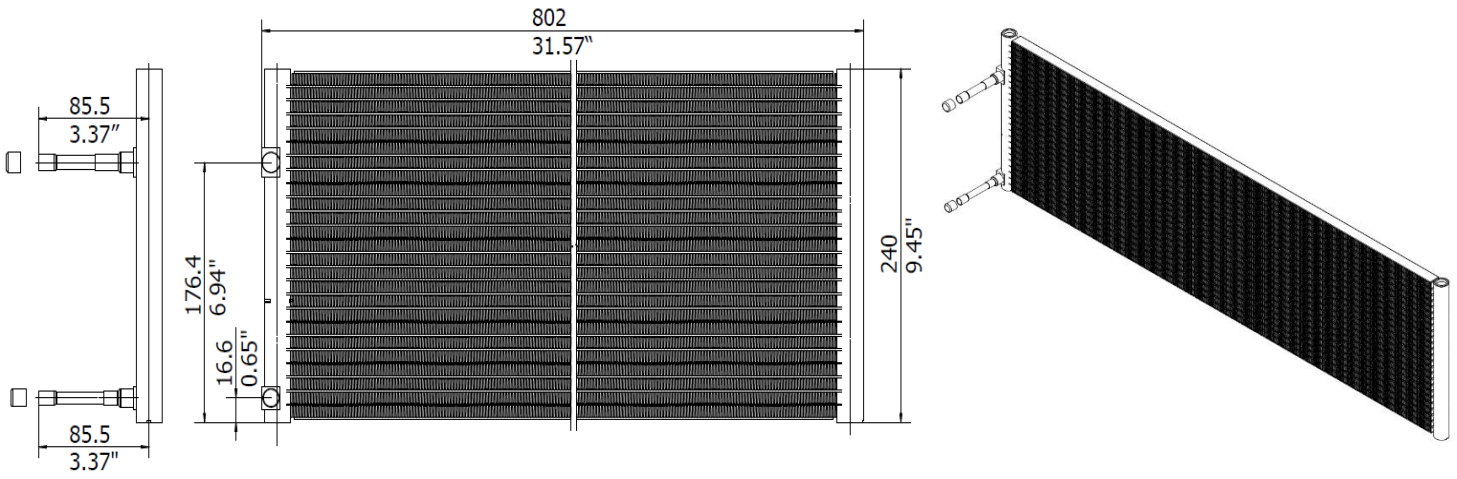

Parameters Table

Model Type	D2300-C	Platform	C116-23FPI
Coil Length	802mm/31.57in	Coil Height	240mm/9.45in
Inlet Connection (ID)	9.7mm/0.38in	Outlet Connection (ID)	8.2mm/0.32in
Tube Width	16mm/0.63in	Tube Height	1.3mm/0.05in
Fin Width	16mm/0.63in	Fin Height	8.1mm/0.32in
Fin Pitch	1.1mm/23FPI	Manifold Diameter	20mm/0.79in
Num. of Tubes	24	Pass Distribution	16/8
Internal Volume	0.23L/14.04 in^3	Coil Weight	1.39Kg/3.07LB
PS	45Bar/ 652.7Psig	TS (Min ~ Max)	-40°C to 121°C/ -40°F to 250 °F
Ambient Temp. Range	-40°C to 72°C / -40°F to 161.6°F	Storage Temp. Range	-40°C to 121°C/ -40°F to 250 °F

Code NO.

Drawing NO.	IPACK	MPACK
DM0030	021U0609(I/32)	021U0689(M/16)

Material

Tube	9153	Manifold	3003
Fin	3003	Connecting Tube	Cu

Approval

PED	N/A (Not needed for this product)	UL	UL 207
Refrigerant	Group 1: R290, R32, R600, R600a, R1234yf, R444B, R454B, R452B, R447A, R454C, R454A. Group 2: R22, R134a, R404A, R407A, R407B, R407C, R410A, R507A, R1234ze, R513A, R448A, R449A, R407F, R452A, R450A, R422B, R422D, R438A, R1233zd(E), R449B, R407H, R513B. Note: R32 is available for MCHEs, but if customers request special PS & TS, please confirm with engineering team.		

Mounting Bars

Aluminum MCHEs expand and contract when exposed to big temperature changes. Installation supports/brackets must allow the MCHE to move in two dimensions;

Performance Data（Typical Refrigerant Application）

Air Velocity (m/s) (ft/min)	Performance（KW/Btu/h×1000）							
	R410A				R134a			
	△=10K/18°F	△=15K/27°F	△=20K/36°F	△=25K/45°F	△=10K/18°F	△=15K/27°F	△=20K/36°F	△=25K/45°F
1.0/197	1.71/5.83	2.66/9.08	3.68/12.56	4.67/15.93	1.64/5.6	2.53/8.63	3.55/12.11	4.32/14.74
1.5/295	2.37/8.09	3.78/12.9	5.15/17.57	6.55/22.35	2.25/7.68	3.49/11.91	4.72/16.1	6.11/20.85
2.0/394	2.93/10	4.74/16.17	6.47/22.08	8.23/28.08	2.77/9.45	4.32/14.74	6.02/20.54	7.65/26.1
2.5/492	3.43/11.7	5.61/19.14	7.66/26.14	9.76/33.3	3.23/11.02	5.05/17.23	7.09/24.19	9/30.71
3.0/591	4.08/13.92	6.42/21.91	8.76/29.89	11.16/38.08	3.65/12.45	5.89/20.1	8.06/27.5	10.18/34.73

Air Velocity (m/s) (ft/min)	Performance（KW/Btu/h×1000）							
	R404A				R407C			
	△=10K/18°F	△=15K/27°F	△=20K/36°F	△=25K/45°F	△=10K/18°F	△=15K/27°F	△=20K/36°F	△=25K/45°F
1.0/197	1.67/5.7	2.58/8.8	3.62/12.35	4.6/15.7	1.03/3.51	2.11/7.2	3.06/10.44	4.06/13.85
1.5/295	2.28/7.78	3.72/12.69	5.06/17.26	6.43/21.94	1.5/5.12	2.91/9.93	4.26/14.54	5.7/19.45
2.0/394	2.79/9.52	4.66/15.9	6.34/21.63	8.06/27.5	1.82/6.21	3.6/12.28	5.43/18.53	7.16/24.43
2.5/492	3.48/11.87	5.48/18.7	7.49/25.56	9.53/32.52	2.12/7.23	4.21/14.36	6.45/22.01	8.43/28.76
3.0/591	3.96/13.51	6.24/21.29	8.54/29.14	10.87/37.09	2.37/8.09	4.78/16.31	7.32/24.98	9.62/32.82

Air Velocity (m/s) (ft/min)	Performance（KW/Btu/h×1000）							
	R290				R454B			
	△=10K/18°F	△=15K/27°F	△=20K/36°F	△=25K/45°F	△=10K/18°F	△=15K/27°F	△=20K/36°F	△=25K/45°F
1.0/197	1.69/5.77	2.62/8.94	3.53/12.04	4.45/15.18	1.57/5.39	2.53/8.63	3.47/11.86	4.49/15.35
1.5/295	2.34/7.98	3.63/12.39	4.9/16.72	6.31/21.53	2.19/7.48	3.51/11.99	4.94/16.86	6.31/21.55
2.0/394	2.9/9.89	4.51/15.39	6.26/21.36	7.92/27.02	2.73/9.31	4.49/15.32	6.21/21.19	7.94/27.10
2.5/492	3.39/11.57	5.29/18.05	7.41/25.28	9.37/31.97	3.20/10.93	5.31/18.11	7.35/25.10	9.41/32.14
3.0/591	3.84/13.1	6.2/21.15	8.45/28.83	10.67/36.41	3.63/12.40	6.07/20.71	8.41/28.69	10.78/36.75

Air-side Pressure Drop Data

Air velocity (m/s) / (ft/min)	Pressure drop (Pa)/ (inch H_2O)	Flow rate (m^3/h) / (cfm)
1.0/197	13.4/0.05	630.99/371.17
1.5/295	22.5/0.09	946.48/556.75
2.0/394	33.10/0.13	1255.67/738.63
2.5/492	45.2/0.18	1577.45/927.91
3.0/591	58.8/0.24	1892.97/1113.51

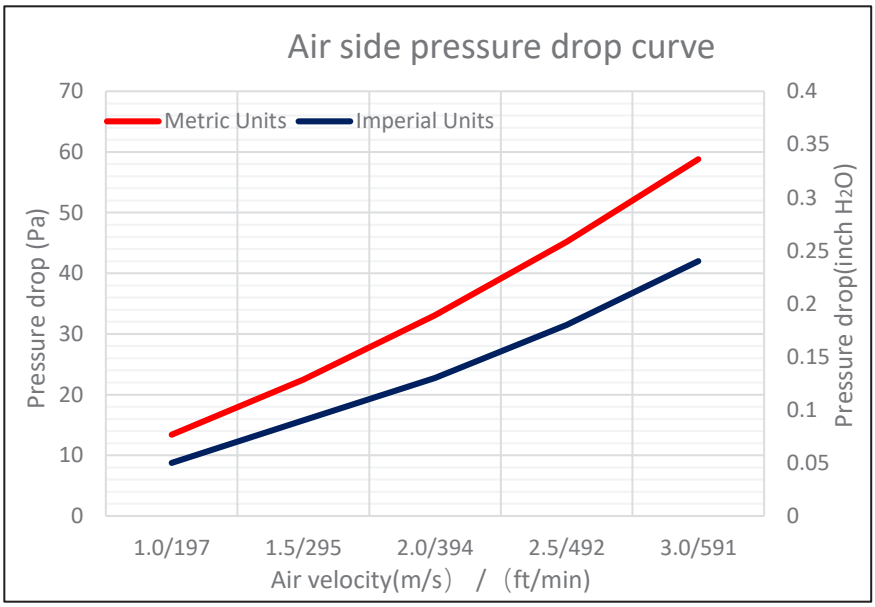

D2400-R FREECOOLING COIL

Micro-Channel Heat Exchanger

Dimensional Drawing

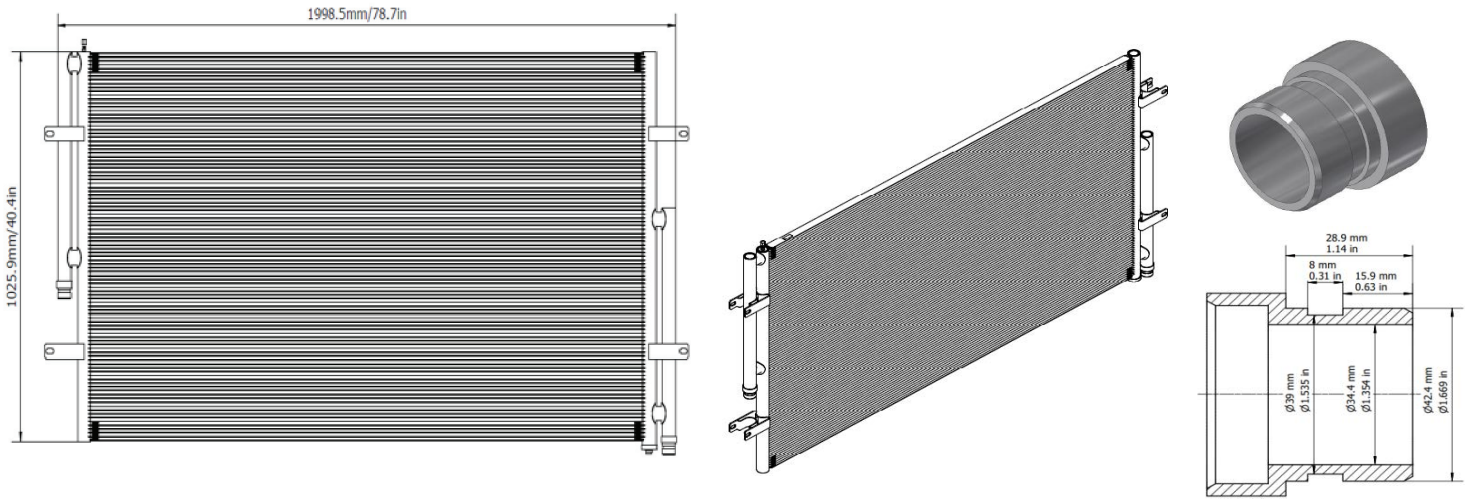

Parameters Table

Model Type	D2400-R	Platform	R332-21FPI
Coil Length	1998.5mm/78.7in	Coil Height	1025.9mm/40.4in
Inlet Connection	Victaulic DN32	Outlet Connection	Victaulic DN32
Tube Width	32mm/1.26in	Tube Height	2.0mm/0.08in
Fin Width	32mm/1.26in	Fin Height	8.1mm/0.32in
Fin Pitch	1.2mm/21FPI	Manifold Diameter	43.5mm/1.71in
Num. of Tubes	100	Pass Distribution	100
Internal Volume	10.9L/665.1 in^3	Coil Weight	25.2Kg/55.5LB
PS	10Bar/ 145.0Psig	TS (Min ~ Max)	-40°C to 110°C/ -40°F to 230 °F
Ambient Temp. Range	-40°C to 72°C / -40°F to 161.6°F	Storage Temp. Range	-40°C to 110°C/ -40°F to 230 °F

Code NO.

Drawing NO.	IPACK	MPACK
DF9001	021U2128(I/16)	N/A
DF9001E	N/A	N/A

Material

Tube	9153	Manifold	3003
Fin	3003	Connecting Tube	AL

Approval

PED	N/A (Not needed for this product)	UL	UL 207
Refrigerant	Deionized Water, Ethylene Glycol Solution, Propylene Glycol Solution		

Mounting Bars

Aluminum MCHEs expand and contract when exposed to big temperature changes. Installation supports/brackets must allow the MCHE to move in two dimensions;

D2500-R FREECOOLING COIL

Micro-Channel Heat Exchanger

Dimensional Drawing

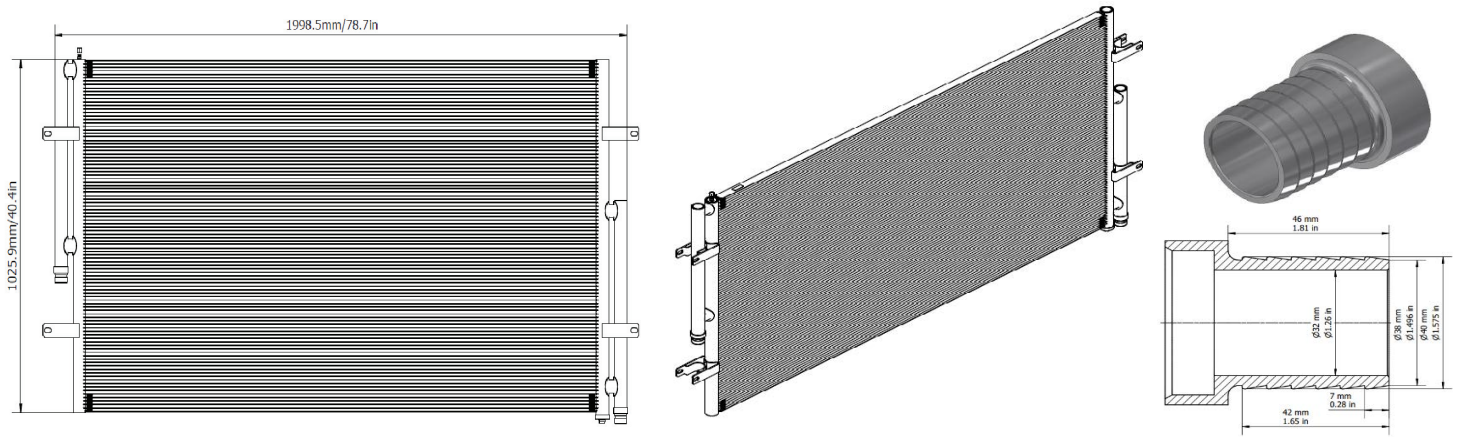

Parameters Table

Model Type	D2500-R	Platform	R332-21FPI
Coil Length	1998.5mm/78.7in	Coil Height	1025.9mm/40.4in
Inlet Connection (ID)	Hose Barb 32mm/1.26in	Outlet Connection (ID)	Hose Barb 32mm/1.26in
Tube Width	32mm/1.26in	Tube Height	2.0mm/0.08in
Fin Width	32mm/1.26in	Fin Height	8.1mm/0.32in
Fin Pitch	1.2mm/21FPI	Manifold Diameter	43.5mm/1.71in
Num. of Tubes	100	Pass Distribution	100
Internal Volume	10.9L/665.1 in^3	Coil Weight	25.2Kg/55.5LB
PS	10Bar/ 145.0Psig	TS (Min ~ Max)	-40°C to 110°C/ -40°F to 230 °F
Ambient Temp. Range	-40°C to 72°C / -40°F to 161.6°F	Storage Temp. Range	-40°C to 110°C/ -40°F to 230 °F

Code NO.

Drawing NO.	IPACK	MPACK
DF9002	021U2314(I/16)	N/A
DF9002E	N/A	N/A

Material

Tube	9153	Manifold	3003
Fin	3003	Connecting Tube	AL

Approval

PED	N/A (Not needed for this product)	UL	UL 207
Refrigerant	Deionized Water, Ethylene Glycol Solution, Propylene Glycol Solution		

Mounting Bars

Aluminum MCHEs expand and contract when exposed to big temperature changes. Installation supports/brackets must allow the MCHE to move in two dimensions;

D2400-R & D2500-R Performance Data

Ethylene Glycol Solution

Air Velocity（m/s）（ft/min）	Ethylene Glycol Performance（KW/Btu/h x1000）								
	Inlet/outlet/Air (15/10/0)℃/(59/50/32)°F			Inlet/outlet/Air (30/20/10) ℃(86/68/50)°F			Inlet/outlet/Air (30/20/15) ℃(86/68/59)°F		
	CONC 30%	CONC 35%	CONC 40%	CONC 30%	CONC 35%	CONC 40%	CONC 30%	CONC 35%	CONC 40%
1.0/197	26.58/90.69	26.42/90.15	26.26/89.60	30.28/103.32	30.11/102.74	29.93/102.13	18.74/63.94	18.65/63.64	18.56/63.33
1.5/295	36.46/124.41	36.1/123.18	35.72/121.88	41.77/142.53	41.38/141.19	40.97/139.80	26.01/88.75	25.77/87.93	25.52/87.08
2.0/394	44.36/151.36	43.77/149.35	43.17/147.30	51.13/174.46	50.48/172.24	49.8/169.92	31.89/108.81	31.49/107.45	31.07/106.02
2.5/492	50.79/173.30	49.98/170.54	49.15/167.71	58.8/200.63	57.89/197.53	56.95/194.32	36.72/125.29	36.16/123.38	35.58/121.4
3.0/591	56.13/191.52	55.11/188.04	54.07/184.49	65.2/222.47	64.04/218.51	62.86/214.49	40.69/138.84	39.97/136.38	39.33/134.2
Flow（m3/h）（cfm）	Ethylene Glycol Pressure Drop（Kpa/Psi）								
	Ethylene Glycol 30%			Ethylene Glycol 35%			Ethylene Glycol 40%		
	15℃/59℉	20℃/68℉	30℃/86℉	15℃/59℉	20℃/68℉	30℃/86℉	15℃/59℉	20℃/68℉	30℃/86℉
5.0/2.94	26.67/3.87	23.14/3.35	17.87/2.59	31.14/4.52	26.88/3.90	20.53/2.98	36.39/5.28	31.24/4.53	23.66/3.43
6.0/3.53	33.86/4.91	29.38/4.26	22.66/3.29	39.51/5.73	34.10/4.94	26.06/3.78	46.20/6.70	39.64/5.75	30.04/4.36
7.0/4.12	41.66/6.04	36.15/5.24	27.89/4.04	47.95/6.95	41.94/6.08	32.06/4.65	56.82/8.24	48.77/7.07	36.93/5.35
8.0/4.71	50.07/8.75	43.42/6.30	33.51/4.86	58.43/8.47	50.40/7.31	38.51/5.58	68.28/9.90	58.60/8.50	44.39/6.44
9.0/5.30	59.07/8.57	51.26/7.43	39.53/5.73	68.95/10.00	59.50/8.63	45.46/6.59	80.58/11.68	69.16/10.03	52.40/7.60
10.0/5.89	68.70/9.96	59.59/8.64	46.00/6.67	80.17/11.62	69.19/10.03	52.88/7.67	93.73/13.59	80.46/11.67	60.92/8.83

Propylene Glycol Solution

Air Velocity（m/s）（ft/min）	Propylene Glycol Performance（KW/Btu/h x1000）								
	Inlet/outlet/Air (15/10/0)℃/(59/50/32)°F			Inlet/outlet/Air (30/20/10) ℃(86/68/50)°F			Inlet/outlet/Air (30/20/15) ℃(86/68/59)°F		
	CONC 30%	CONC 35%	CONC 40%	CONC 30%	CONC 35%	CONC 40%	CONC 30%	CONC 35%	CONC 40%
1.0/197	26.74/91.24	26.61/90.8	26.46/90.29	30.37/103.63	30.23/103.15	30.06/102.57	18.86/64.34	18.77/64.35	18.67/63.7
1.5/295	36.85/125.74	36.54/124.68	36.19/123.49	42.07/143.55	41.76/142.49	41.35/141.09	26.22/89.47	26/88.72	25.75/87.86
2.0/394	45.00/153.55	44.48/151.77	43.92/149.86	51.71/176.44	51.09/174.33	50.42/172.04	32.25/110.04	31.88/108.78	31.47/107.38
2.5/492	51.69/176.37	50.96/173.88	50.19/171.26	59.62/203.43	58.76/200.5	57.82/197.29	37.21/126.97	36.68/125.16	36.10/123.18
3.0/591	57.26/195.38	56.34/192.24	55.37/188.93	66.26/226.09	65.15/222.3	63.96/218.24	41.39/141.23	40.71/138.91	39.98/136.42
Flow（m3/h）（cfm）	Propylene Glycol Pressure Drop（Kpa/Psi）								
	Propylene Glycol 30%			Propylene Glycol 35%			Propylene Glycol 40%		
	15℃/59℉	20℃/68℉	30℃/86℉	15℃/59℉	20℃/68℉	30℃/86℉	15℃/59℉	20℃/68℉	30℃/86℉
5.0/2.94	38.44/5.57	31.69/4.60	22.43/3.25	46.62/6.76	37.99/5.51	26.30/3.81	56.54/8.2	45.55/6.60	30.84/4.47
6.0/3.53	48.77/7.07	40.23/5.83	28.47/4.13	59.15/8.58	48.22/6.99	33.38/4.84	71.75/10.4	57.80/8.38	39.11/5.67
7.0/4.12	60.01/8.70	49.47/7.17	35.03/5.08	72.77/10.55	59.31/8.60	41.04/5.95	88.27/12.8	71.09/10.31	48.12/6.98
8.0/4.71	72.11/10.46	59.46/8.62	42.10/6.10	87.47/12.68	71.28/10.34	49.34/7.15	106.06/15.38	85.44/12.39	57.84/8.39
9.0/5.30	85.12/12.34	70.18/10.18	49.69/7.20	103.20/14.96	84.13/12.20	58.24/8.44	125.18/18.15	100.83/14.62	68.27/9.90
10.0/5.89	98.97/14.35	81.62/11.84	57.78/8.38	120.03/17.40	97.84/14.19	67.73/9.82	145.58/21.11	117.25/17.00	79.39/11.51

Deionized Water Solution

Air Velocity （m/s） （ft/min）	Deionized Water Performance （KW/Btu/h x1000）		
	Inlet/outlet/Air (15/10/0)℃/(59/50/32)℉	Inlet/outlet/Air (30/20/10) ℃(86/68/50)℉	Inlet/outlet/Air (30/20/15) ℃(86/68/59)℉
1.0/197	27.31/93.18	30.98/105.71	19.20/65.51
1.5/295	38.29/130.65	43.74/149.25	27.17/92.71
2.0/394	47.48/162.01	54.53/186.06	33.94/115.81
2.5/492	55.22/188.42	63.72/217.42	39.71/135.50
3.0/591	61.83/210.97	71.62/244.38	44.69/152.49
Flow （m3/h） （cfm）	Deionized Water Pressure Drop （Kpa/Psi）		
	15℃/59℉	20℃/68℉	30℃/86℉
5.0/2.94	11.99/1.74	10.54/1.53	8.41/1.22
6.0/3.53	15.18/2.20	13.40/1.94	10.67/1.55
7.0/4.12	18.72/2.71	16.48/2.39	13.12/1.90
8.0/4.71	22.48/3.26	19.80/2.87	15.74/2.28
9.0/5.30	26.54/3.85	23.36/3.39	18.61/2.70
10.0/5.89	30.88/4.48	27.16/3.94	21.64/3.14

Air-side Pressure Drop Data

Air velocity (m/s) / (ft/min)	Pressure drop (Pa)/ (inch H_2O)	Flow rate (m^3/h) / (cfm)
1.0/197	25.1/0.10	6534/3845
1.5/295	41.7/0.17	9802/5769
2.0/394	61.0/0.25	13070/7692
2.5/492	83.0/0.33	16337/9616
3.0/591	107.8/0.43	19605/11539

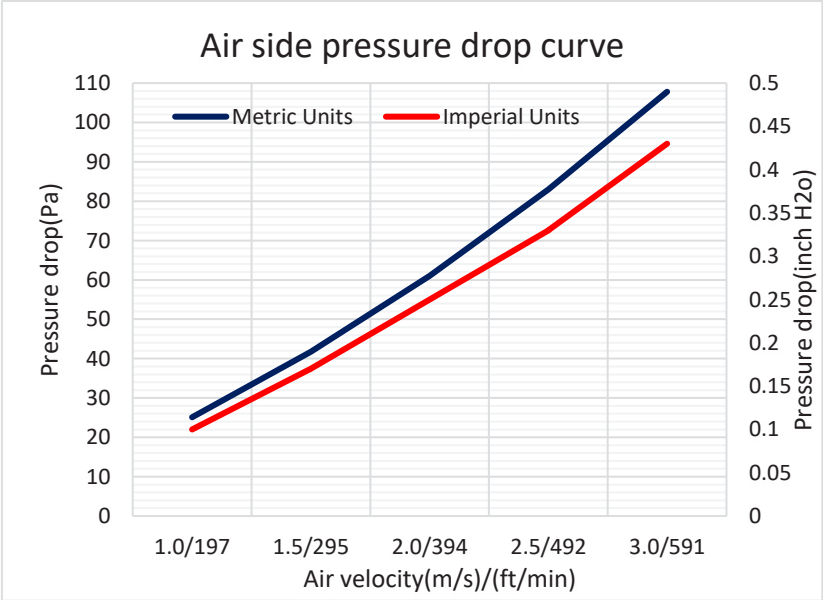

Note: Ethylene glycol solution, Propylene glycol solution and deionized water shall be applied with inhibitor. Please see the service guide detail in Installation and Maintenance Manual MCHE.



Danfoss Automation Technology (Zhejiang) Co., Ltd.
Add: No.2288, Baichibei Road, Haiyan, Zhejiang Province 314300, P.R.
China

Website: http://www.danfoss.com

Danfoss A/S
Climate Solutions • danfoss.com • +45 7488 2222

Any information, including, but not limited to information on selection of product, its application or use, product design, weight, dimensions, capacity or any other technical data in product manuals, catalogues descriptions, advertisements, etc. and whether made available in writing, orally, electronically, online or via download, shall be considered informative, and is only binding if and to the extent, explicit reference is made in a quotation or order confirmation. Danfoss cannot accept any responsibility for possible errors in catalogues, brochures, videos and other material.
Danfoss reserves the right to alter its products without notice. This also applies to products ordered but not delivered provided that such alterations can be made without changes to form, fit or function of the product.
All trademarks in this material are property of Danfoss A/S or Danfoss group companies. Danfoss and the Danfoss logo are trademarks of Danfoss A/S. All rights reserved.

AF290428284288en-010502

© Danfoss | Climate Solutions