Design Guide

iC7-Automation Air-cooled Enclosed Drives

206/385–2510 A



Explore our solutions
drives.danfoss.com

Contents

1 Introduction

1.1 Purpose of this Design Guide 9
1.2 Additional Resources 9
1.3 Planning and Design Support Materials 9
1.3.1 Overview 9
1.3.2 Locating Support Information 10
1.4 Version History 10
1.5 Abbreviations 10
1.6 Recommended Disposal 11

2 Safety

2.1 Safety 12
2.2 Safety Symbols 12
2.3 General Safety Considerations 12
2.4 Target Group and Necessary Qualifications 14

3 Danfoss iC7 Series

3.1 Overview of iC7 Series 15

4 Product Overview

4.1 The Air-cooled Enclosed Drives 16
4.2 Interior Views of the Products 16
4.2.1 Interior View of the Cabinet, FE9 16
4.2.2 Interior View of the Cabinet, FE10 18
4.2.3 Interior View of the Cabinet, AE10 + IE10 20
4.2.4 Interior View of the Cabinet, 2 x AE10 + 2 x IE10 21
4.2.5 Interior View of the Cabinet, AE11 + IE11 22
4.2.6 Interior View of the Cabinet, 2 x AE11 + 2 x IE11 23
4.2.7 Interior View of the Cabinet, 3 x AE11 + 3 x IE11 24
4.3 Description of the Frame Designation 25
4.4 Weights 25
4.5 Description of the Model Code 25
4.6 Product Label 26
4.7 Labels on the Power Units 27

4.8 Lifting the Enclosed Drive 27

5 Mechanical Installation

5.1 Storing the Enclosed Drive 30
5.1.1 Storage Requirements 30
5.1.2 Storage of 2–12 Months 30
5.1.3 Storage of over 12 Months (FE9 and FE10) 30
5.1.4 Storage of Several Years 30
5.2 Installation Requirements 30
5.3 Installing the Enclosed Drive 30
5.4 Installing the Enclosed Drives Back to Back 31
5.5 Installing the IP21 Top Cover 32
5.6 Attaching the Top Cabling Cabinet Section 33
5.7 Cooling Requirements 41
5.7.1 General Cooling Requirements 41
5.7.2 Default Cooling 42
5.7.3 Cooling Options 43
5.8 Installing the Back-channel Cooling Option, +OABC 45
5.9 The Marine Construction Option, +AFMC 46

6 Electrical Installation

6.1 Fuse Guidelines 48
6.2 Grounding Principles 48
6.3 Cable Requirements 49
6.4 Brake Cable Requirements 49
6.5 Prerequisites for Cable Installation 50
6.6 Installing Power Cables 51
6.6.1 Installing the Power Cables through the Bottom 51
6.6.2 Installing the Power Cables through the Top (+KCIT or +KDOT) 54
6.6.3 Installing the Power Cables through the Bottom, Gland Plate +KFCP 56
6.6.4 Installing the Power Cables through the Top, Gland Plate +KFCP 59
6.6.5 Installing the Power Cables in the Inverter Module Cabinet, Gland Plate +KFCP 62
6.7 Installing the Brake Cables, FE9, FE10 63
6.8 Parameter Settings for IT Mains 64
6.9 Disconnecting the dU/dt Filter Capacitors 64

Danfoss Drives Oy © 2026.06

7 Control and Option Installation

7.1 General Information of the Control Compartment 66
7.2 Control Compartment Door Elements 66
7.3 Control Compartment Internal Elements 68
7.4 Control Compartment Connections 71
7.5 Star Coupler Board 72
7.6 I/O and Relay Option Connections 74
7.7 I/O and Relay Option Interface 76
7.7.1 Analog Inputs 76
7.7.2 Analog Outputs 77
7.7.3 Digital Inputs 78
7.7.4 Digital Outputs 78
7.7.5 Relay Outputs 78
7.7.6 Analog Reference Voltage Output 79
7.7.7 24 V DC Voltage Output 79
7.7.8 Thermistor Input 80
7.8 Control Cable Routing 80
7.9 Installing Boards to the Modular Control Unit 83
7.10 Installing the Control Cables 84
7.10.1 Requirements for the Control Cables 84
7.10.2 Installing the Control Cables 84

8 Maintenance

8.1 Preventive Maintenance Recommendations 88
8.2 Using the Product Modified Label 90
8.3 Replacing the RTC Battery 90
8.4 Cleaning or Replacing the Door Filters 91

9 Specifications

9.1 Tightening Torques 93
9.2 Dimension Illustrations 93
9.2.1 Dimensions of the Cabinet Feet 93
9.2.2 Dimensions of the Enclosed Drive, FE9 94
9.2.3 Dimensions of the Enclosed Drive, FE10 95
9.2.4 Dimensions for the Bottom Cabling Option, AE10, IE10 96

9.2.5 Dimensions for the Bottom Cabling Option, AE11, IE11 97
9.2.6 Dimensions for the Bottom Cabling Option, 2 x AE10, 2 x IE10 98
9.2.7 Dimensions for the Bottom Cabling Option, 2 x AE11, 2 x IE11 99
9.2.8 Dimensions for the Bottom Cabling Option, 3 x AE11, 3 x IE11 100
9.2.9 Dimensions for the Top Cabling Option, FE9 101
9.2.10 Dimensions for the Top Cabling Option, FE10 102
9.2.11 Dimensions for the Top Cabling Option, AE10, IE10 103
9.2.12 Dimensions for the Top Cabling Option, AE11, IE11 104
9.2.13 Dimensions for the Top Cabling Option, 2 x AE10, 2 x IE10 105
9.2.14 Dimensions for the Top Cabling Option, 2 x AE11, 2 x IE11 106
9.2.15 Dimensions for the Top Cabling Option, 3 x AE11, 3 x IE11 107
9.2.16 Dimensions for Default Cooling, FE9 108
9.2.17 Dimensions for Default Cooling, FE10 109
9.2.18 Dimensions for Default Cooling, AE10, IE10 110
9.2.19 Dimensions for Default Cooling, AE11, IE11 111
9.2.20 Dimensions for Default Cooling, 2 x AE10, 2 x IE10 112
9.2.21 Dimensions for Default Cooling, 2 x AE11, 2 x IE11 113
9.2.22 Dimensions for Default Cooling, 3 x AE11, 3 x IE11 114
9.2.23 Dimensions for Back-channel Cooling Option, FE9 115
9.2.24 Dimensions for Back-channel Cooling Option, FE10 116
9.2.25 Dimensions for Back-channel Cooling Option, AE10, IE10 117
9.2.26 Dimensions for Back-channel Cooling Option, AE11, IE11 118
9.2.27 Dimensions for Back-channel Cooling Option, 2 x AE10, 2 x IE10 119
9.2.28 Dimensions for Back-channel Cooling Option, 2 x AE11, 2 x IE11 120
9.2.29 Dimensions for Back-channel Cooling Option, 3 x AE11, 3 x IE11 121
9.2.30 Dimensions for the Cooling Air Output Flange Option, FE9 122
9.2.31 Dimensions for the Cooling Air Output Flange Option, FE10 123
9.2.32 Dimensions for the Cooling Air Output Flange Option, AE10, IE10 124
9.2.33 Dimensions for the Cooling Air Output Flange Option, AE11, IE11 125
9.2.34 Dimensions for the Cooling Air Output Flange Option, 2 x AE10, 2 x IE10 126
9.2.35 Dimensions for the Cooling Air Output Flange Option, 2 x AE11, 2 x IE11 127
9.2.36 Dimensions for the Cooling Air Output Flange Option, 3 x AE11, 3 x IE11 128
9.2.37 Dimensions for the Marine Construction Option 129
9.2.38 Dimensions of the Control Board 130
9.2.39 Dimensions of the I/O and Relay Option 131
9.2.40 Dimensions of an Option Board 132

Danfoss Drives Oy © 2026.06

9.2.41 Dimensions of the 4-port Star Coupler Board 133
9.2.42 Dimensions of the 8-port Star Coupler Board 134
9.2.43 Dimensions of the 16-port Star Coupler Board 135
9.3 Wiring Diagrams 136
9.3.1 Wiring Diagram, FE9, FE10 136
9.3.2 Wiring Diagram, AE10+IE10, AE11+IE11, 261–590 A 137
9.3.3 Wiring Diagram, AE11+IE11, 658–880 A 139
9.3.4 Wiring Diagram, 2 x AE10+2 x IE10 140
9.3.5 Wiring Diagram, 2 x AE11+2 x IE11 142
9.3.6 Wiring Diagram, 3 x AE11 + 3 x IE11 144
9.3.7 Pre-charging Control Wiring Diagram, AE10, AE11, IE10, IE11 146
9.3.8 The Pre-charging Function 148
9.4 Options 148
9.4.1 Available Options for the Enclosed Drives 148
9.4.2 Air Circuit Breaker (+GACB) 149
9.4.3 Grounding Switch (+GCES) 150
9.4.4 STO/SS1 Push Button on Door (+ILSS) 150
9.4.5 Auxiliary AC supply (+IHAS) 150
9.4.6 Motor Fan Control/Supply (+ICF1, +ICF2, +ICF3, +ICF4) 151
9.5 Cable Sizes 151
9.5.1 General Cable Size Information 151
9.5.2 Mains Cable Size Recommendations, 380–500 V 152
9.5.3 Motor Cable Size Recommendations, 380–500 V 154
9.5.4 Mains Cable Size Recommendations, UL, 480 V 155
9.5.5 Motor Cable Size Recommendations, UL 480 V 157
9.5.6 Mains Cable Size Recommendations, 525–690 V 158
9.5.7 Motor Cable Size Recommendations, 525–690 V 159
9.5.8 Brake Cable Size Recommendations 160
9.5.9 Brake Cable Size Recommendations, UL 161
9.6 Fuses 161
9.6.1 Fuse Size Tables 161
9.6.2 AC Fuses, 380–500 V AC 161
9.6.3 DC Fuses, 465–800 V DC 162
9.6.4 AC Fuses, 525–690 V AC 163
9.6.5 DC Fuses, 640–1100 V DC 164

9.6.6 External Supply Protection for Input Devices 165
9.7 Current Ratings 167
9.7.1 General Current Rating Information 167
9.7.2 Current Ratings for 6-pulse Enclosed Drives, FE9 and FE10, 400 V AC 168
9.7.3 Current Ratings for 6-pulse Enclosed Drives, FE9 and FE10, UL, 460 V AC 168
9.7.4 Current Ratings for 6-pulse Enclosed Drives, FE9 and FE10, 500 V AC 169
9.7.5 Current Ratings for Regenerative AFE, 400 V AC 169
9.7.6 Current Ratings for Regenerative AFE, UL, 460 V AC 170
9.7.7 Current Ratings for Regenerative AFE, 500 V AC 170
9.7.8 Current Ratings for Regenerative AFE, 525 V AC 171
9.7.9 Current Ratings for Regenerative AFE, 690 V AC 171
9.7.10 Current Ratings for Low-harmonic AFE, 400 V AC 172
9.7.11 Current Ratings for Low-harmonic AFE, UL, 460 V AC 173
9.7.12 Current Ratings for Low-harmonic AFE, 500 V AC 173
9.7.13 Current Ratings for Low-harmonic AFE, 525 V AC 174
9.7.14 Current Ratings for Low-harmonic AFE, 690 V AC 174
9.8 Output Current Derating 175
9.8.1 Derating the Output Current, 380–500 V AC 175
9.8.2 Derating the Output Current, 525–690 V AC 176
9.8.3 Output dU/dt Filter Derating 177
9.8.4 Output Common-mode Filter Derating 178
9.9 Power Losses 179
9.9.1 Power Losses of 6-pulse Enclosed Drives, 500 V AC 179
9.9.2 Power Losses of Regenerative and Low-Harmonic Enclosed Drives, 500 V AC 179
9.10 Technical Data 180
9.10.1 Mains Connections 180
9.10.2 Motor Connections 180
9.10.3 Ambient Conditions 181
9.10.4 EMC (IEC 61800-3) 182
9.10.5 Protections 183
9.10.6 Product Compliance 183
9.10.7 Efficiency 184

Danfoss Drives Oy © 2026.06

1 Introduction

1.1 Purpose of this Design Guide

This design guide is intended for qualified personnel, such as:

- Project and systems engineers.
- Design consultants.
- Application and product specialists.

The design guide provides technical information to understand the capabilities of the iC7 drives for integration into motor control and monitoring systems. Its purpose is to provide design considerations and planning data for integration of the drive into a system. It caters for selection of drives and options for a diversity of applications and installations. Reviewing the detailed product information in the design stage enables developing a well-conceived system with optimal functionality and efficiency.

This guide is targeted at a worldwide audience. Therefore, wherever occurring, both SI and imperial units are shown.

1.2 Additional Resources

Additional resources are available to help understand the features, and safely install and operate the iC7 products:

- Safety guides, which provide important safety information related to installing iC7 drives.
- Installation guides, which cover the mechanical and electrical installation of drives, or functional extension options.
- Operating guides, which include instructions for control options and other components for the drive.
- Application guides, which provide instructions on setting up the drive for a specific end use. Application guides for application software packages also provide an overview of the parameters and value ranges for operating the drives, configuration examples with recommended parameter settings, and troubleshooting steps.
- *Facts Worth Knowing about AC Drives*, available for download on www.danfoss.com.
- Other supplemental publications, drawings, and guides are available at www.danfoss.com.

Latest versions of Danfoss product guides are available for download at www.danfoss.com/en/service-and-support/documentation/.

1.3 Planning and Design Support Materials

1.3.1 Overview

Danfoss provides access to comprehensive product information that supports throughout the product lifecycle.

All iC7 series design guides, installation guides, safety guides, operating guides, and application guides are available for download at www.danfoss.com. It is also possible to order printed guides.

For each iC7 drive or power converter, 2D and 3D drawings, and wiring diagrams are available in standard file formats. EPLAN files with macros, technical data, and 3D models are also provided to support in the system design.

EPLAN files with macros are available for download from the EPLAN Data Portal at www.eplandataportal.com. The configurator in EPLAN Electric P8 provides access to Danfoss drive data, optimizes system design by automating the EDZ file generation, and ensures precise specifications.

Configuration files for drives or power converters are also available. MyDrive® Suite provides tools that support the entire lifecycle of the product, from system design to service. MyDrive® Suite is available at suite.mydrive.danfoss.com/.

The Danfoss product configurator (available at https://store.danfoss.com) helps in the product selection, and when the process has been completed, the tool provides a list of relevant documentation and accessories.

Detailed product information can also be accessed by reading the 2D code on the product label.

1.3.2 Locating Support Information

Additional information is available on the company website.

1. Go to www.danfoss.com.
2. Select *Products*.
3. Select *Drives*.
4. Select the product series, for example *Low-voltage drives* or *System modules*.
5. Select the product series (for example, iC7).

The browser opens the product page, which provides links to documents, drawings, and software of the product.

1.4 Version History

This guide is regularly reviewed and updated. All suggestions for improvement are welcome.

The original language of this guide is English.

Table 1: Version History

Version	Remarks
A	Design guide created based on the previous operating guide 139Z8096.
B	Instructions for attaching the top cabling cabinet section. Information on the Marine construction option +AFMC. Power cabling instructions updated. Emergency stop button (+ILSS) data removed to a different guide. Several new more specific dimensional drawings added. Existing dimensional drawings updated. Other small changes throughout the guide.
C	Information on a new voltage class 07: 690 V AC. Information on using 3 products in parallel. New dimensional drawings added on top cabling.

1.5 Abbreviations

Table 2: Abbreviations, Acronyms, and Symbols

Term	Definition
AC	Alternating current
AFE	Active front end
AI	Analog input
AO	Analog output
AWG	American wire gauge
DC	Direct current
DI	Digital input
DO	Digital output
EMC	Electromagnetic compatibility
EN	European standards

Danfoss Drives Oy © 2026.06

Table 2: Abbreviations, Acronyms, and Symbols - (continued)

Term	Definition
GND	Ground
LHD	Low-harmonic
I	Current
IEC	International Electrotechnical Commission
INU	Inverter
I/O	Input/output
IP	Ingress protection
LC	Inductor-capacitor
NC	Normally closed
NO	Normally open
PCB	Printed circuit board
PE	Protective earth
RTC	Real-time clock
SS1	Safe stop 1
STO	Safe torque off
U	Voltage
UL	Underwriters Laboratories

1.6 Recommended Disposal

When the product reaches the end of its service life, its primary components can be recycled.

Before the materials can be removed, the product must be disassembled. Product parts and materials can be dismantled and separated. Generally, all metals, such as steel, aluminum, copper and its alloys, and precious metals can be recycled as material. Plastics, rubber, and cardboard can be used in energy recovery. Printed circuit boards and large electrolytic capacitors with a diameter of over 2.5 cm (1 in) need further treatment according to IEC 62635 guidelines. To ease recycling, plastic parts are marked with an appropriate identification code.

Contact the local Danfoss office for further information on environmental aspects and recycling instructions for professional recyclers. End-of-life treatment must follow international and local regulations.

All products are designed and manufactured in accordance with Danfoss company guidelines on prohibited and restricted substances. A list of these substances is available at www.danfoss.com.



This symbol on the product indicates that it must not be disposed of as household waste. Do not dispose of equipment containing electrical components together with domestic waste.

It must be handed over to the applicable take-back scheme for the recycling of electrical and electronic equipment.

- Dispose of the product through channels provided for this purpose.
- Comply with all local and currently applicable laws and regulations.

2 Safety

2.1 Safety

When designing variable frequency drives, some residual dangers cannot be avoided. One example is the discharge time, which must be observed to avoid potential death or serious injury. The discharge time is shown on the danger label on the drive.

For further information on safety precautions related to the installation, operation, or maintenance of products, refer to the product-specific installation, safety, and operating guides.

2.2 Safety Symbols

The following symbols are used in Danfoss documentation and products.

⚠ DANGER

Indicates a hazardous situation which, if not avoided, will result in death or serious injury.

⚠ WARNING

Indicates a hazardous situation which, if not avoided, could result in death or serious injury.

⚠ CAUTION

Indicates a hazardous situation which, if not avoided, could result in minor or moderate injury.

NOTICE

Indicates information considered important, but not hazard-related (for example, messages relating to property damage).

	ISO warning symbol for general warnings
	ISO warning symbol for hot surfaces and burn hazard
	ISO warning symbol for high voltage and electric shock
	Symbol for indicating the required discharge time of the capacitors in the product.
	ISO action symbol for referring to the instructions

2.3 General Safety Considerations

⚠ WARNING



LACK OF SAFETY AWARENESS

This guide provides important information on preventing injury and damage to the equipment or the system. Ignoring this information can lead to death, serious injury, or severe damage to the equipment.

- Make sure to fully understand the dangers and safety measures present in the application.

Danfoss Drives Oy © 2026.06

DANGER

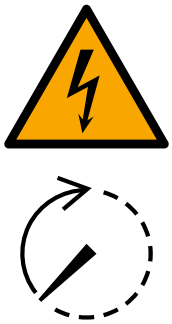

DISCHARGE TIME (5 OR 20 MINUTES)

The drive contains capacitors, which can remain charged even when the drive is not powered. High voltage can be present even when the warning indicator lights are off.

Failure to wait for the given discharge time after power has been removed before performing service or repair work can result in death or serious injury.

- Stop the system.
- Disconnect all inputs and outputs that can supply energy to the drive.
- Wait for the capacitors to discharge fully before performing any service on the equipment. The exact discharge time is also shown on the front cover of the drive. If the device is broken or fuses have tripped, the discharge time is longer.

  Discharge time

  AE10, AE11, IE10, IE11: 5 minutes

  FE9, FE10: 20 minutes
- Measure the voltage level to verify full discharge.

DANGER



ELECTRIC SHOCK

The drive contains hazardous voltage when a power source is connected to the AC or DC terminals. Failure to disconnect all power sources can result in death or serious injury.

- Before performing any electrical work on the drive, disconnect, lock out, and tag out all power sources to the drive.
- There is more than 1 live circuit. See the relevant wiring diagrams in the product guide and the diagrams delivered with the product.

WARNING



SHOCK HAZARD FROM PE CONDUCTOR

The drive can cause a DC current in the PE conductor. Failure to use a residual current-operated protective device (RCD) Type B or a residual current-operated monitoring device (RCM) can lead to the RCD not providing the intended protection and therefore can result in death or serious injury.

- Use a type B RCD or RCM device on the mains side of the drive.

WARNING

UNINTENDED START

When the drive is connected to a power source, the system may start at any time, causing risk of death, serious injury, and equipment or property damage.

- Stop the drive and motor before configuring parameters.
- Make sure that the drive cannot be started by an external switch, a fieldbus command, an input reference signal from the control panel, or after a cleared fault condition.
- Disconnect the drive from the power source whenever safety considerations make it necessary to avoid unintended start.
- Check that the drive, motor, and any driven equipment are in operational readiness.

⚠ CAUTION

AUTOMATIC RESTART

The automatic restart function can cause danger.

- Before activating any automatic fault reset functions or changing limit values, make sure that no dangerous situations can occur after restart. If the auto reset function is activated, the motor starts automatically after an automatic fault reset.
- For more information on configuring automatic restart, refer to the application guide.

2.4 Target Group and Necessary Qualifications

Correct and reliable transport, storage, installation, operation, and maintenance are required for the trouble-free and safe operation of the products. Only qualified personnel are allowed to perform all related activities for these tasks. Qualified personnel are defined as properly trained staff, who are familiar with and authorized to install, commission, and maintain the equipment/systems and circuits in accordance with pertinent laws and regulations. Also, the qualified personnel must be familiar with the instructions and safety measures described in this guide and other relevant guides. Non-qualified electricians are not allowed to perform any electrical installation or troubleshooting activities.

Specialized training is required for repair. Only Danfoss authorized, qualified personnel are allowed to repair this equipment.

Danfoss Drives Oy © 2026.06

3 Danfoss iC7 Series

3.1 Overview of iC7 Series

The Danfoss iC7 series comprises 3 products that combine hardware and software. Hiding DC/DC data from release temporarily.

Table 3: The iC7 Series

Product	Product category	Product type	Application software
iC7-Automation	Air-cooled system modules	Non-regenerative front-end	Non-regenerative front-end (NFE) application
		Active front-end	Active front-end application
		Inverter	Industry application
	Enclosed drives	Active front-end	Active front-end application
		Inverter	Industry application
	Frequency converters	Frequency converter	Industry application, Motion application
iC7-Marine	Liquid-cooled system modules	Active front-end	Active front-end application
		Inverter	Propulsion & Machinery application
iC7-Hybrid	Air-cooled or liquid-cooled system modules	Grid converter	Grid converter application
			Generator application
		DC/DC converter	DC/DC converter application

Additional application software can be purchased and some application software are only available for a specific hardware variant and product.

There are application guides available for all the application software packages.

4 Product Overview

4.1 The Air-cooled Enclosed Drives

The enclosed drives come in 6-pulse, low-harmonic, and regenerative variants. The control compartment on the cabinet door gives easy access to the control. The air-cooled enclosed drives have high power density because of efficient cooling solutions.

The integrated service table is used for maintenance.

The protection rating of the products is IP21 or IP54. The enclosed drives can withstand a wide range of ambient temperatures and altitudes.

4.2 Interior Views of the Products

4.2.1 Interior View of the Cabinet, FE9

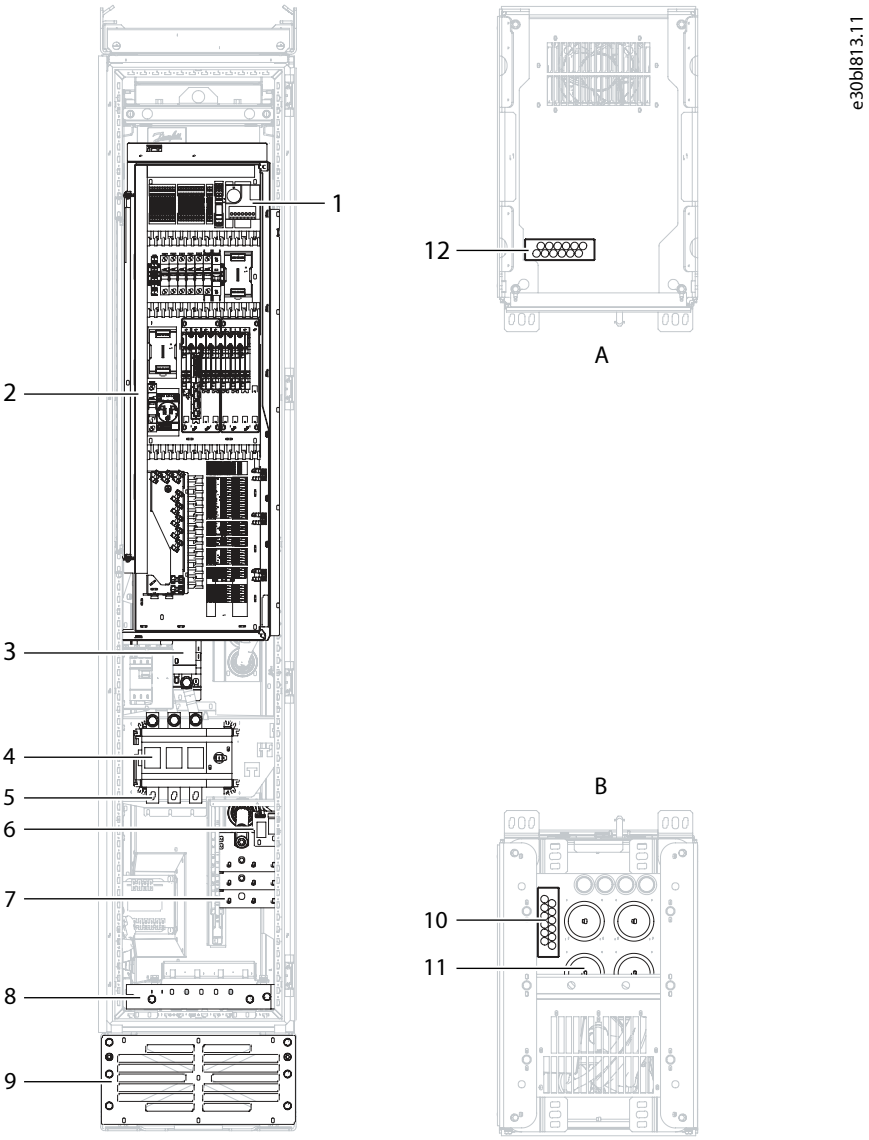

Figure 1: Interior View of FE9

1	Door fan thermostat	2	Control compartment
3	Contactor	4	Main switch (optional)
5	Mains terminals	6	dU/dt Filter

Danfoss Drives Oy © 2026.06

7	Motor terminals	8	PE busbar
9	Inlet air grill	10	IP54 grommet for mains and motor cables (IEC)
11	Control cable grommet, bottom	12	Control cable grommet, top
A	View from the top	B	View from the bottom

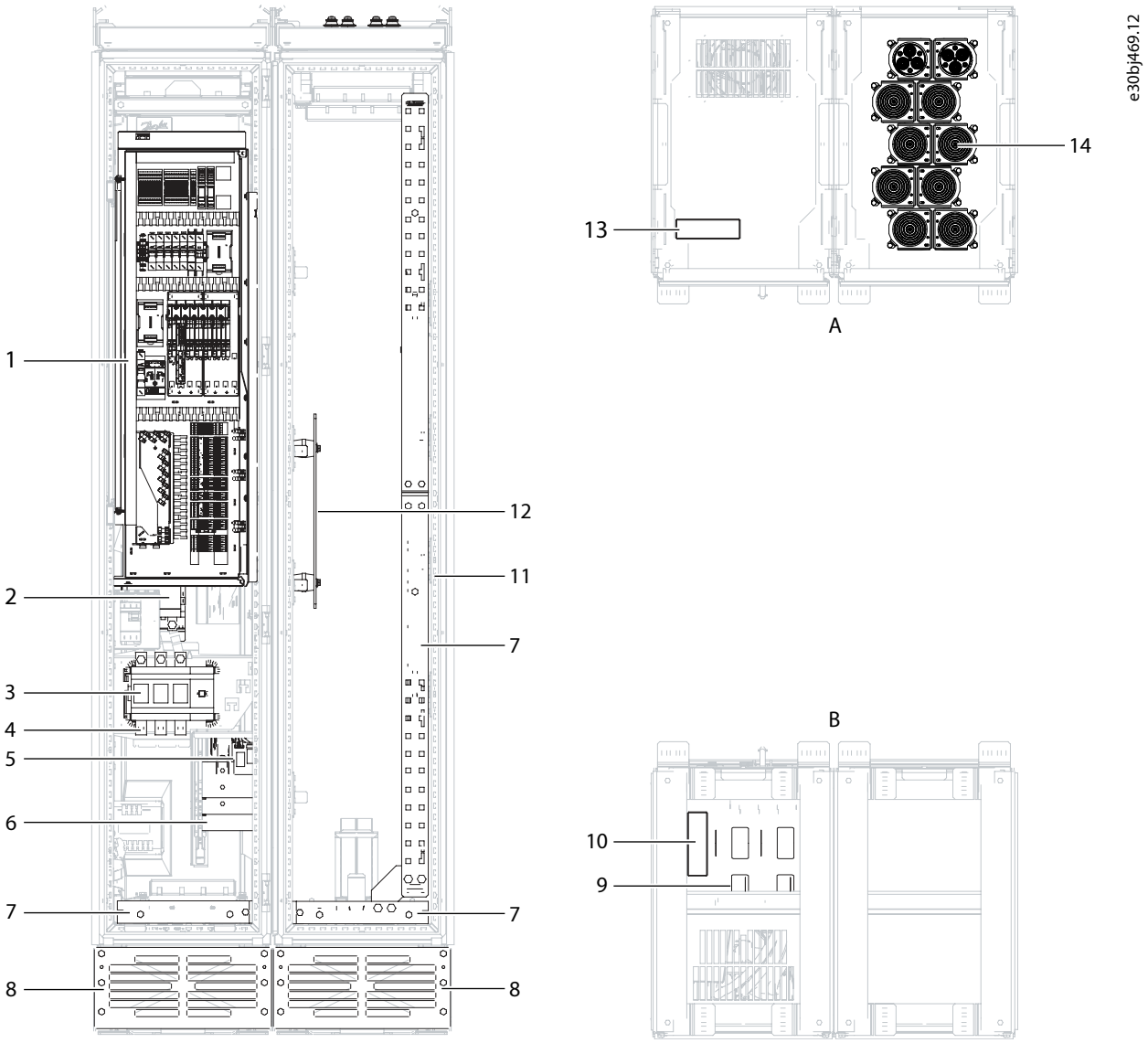

Figure 2: Interior View of FE9 with Top-entry Option

1	Control compartment	2	Contactor
3	Main switch (optional)	4	Mains terminals
5	dU/dt Filter	6	Motor terminals
7	PE busbar	8	Inlet air grill
9	IP54 grommet for mains and motor cables (IEC)	10	Control cable grommet, bottom
11	Mains terminals (behind PE busbar, Top-entry option)	12	Motor terminals (Top-entry option)

13	Control cable grommet, top	14	IP54 grommet for mains and motor cables (Top-entry option)
A	View from the top	B	View from the bottom

4.2.2 Interior View of the Cabinet, FE10

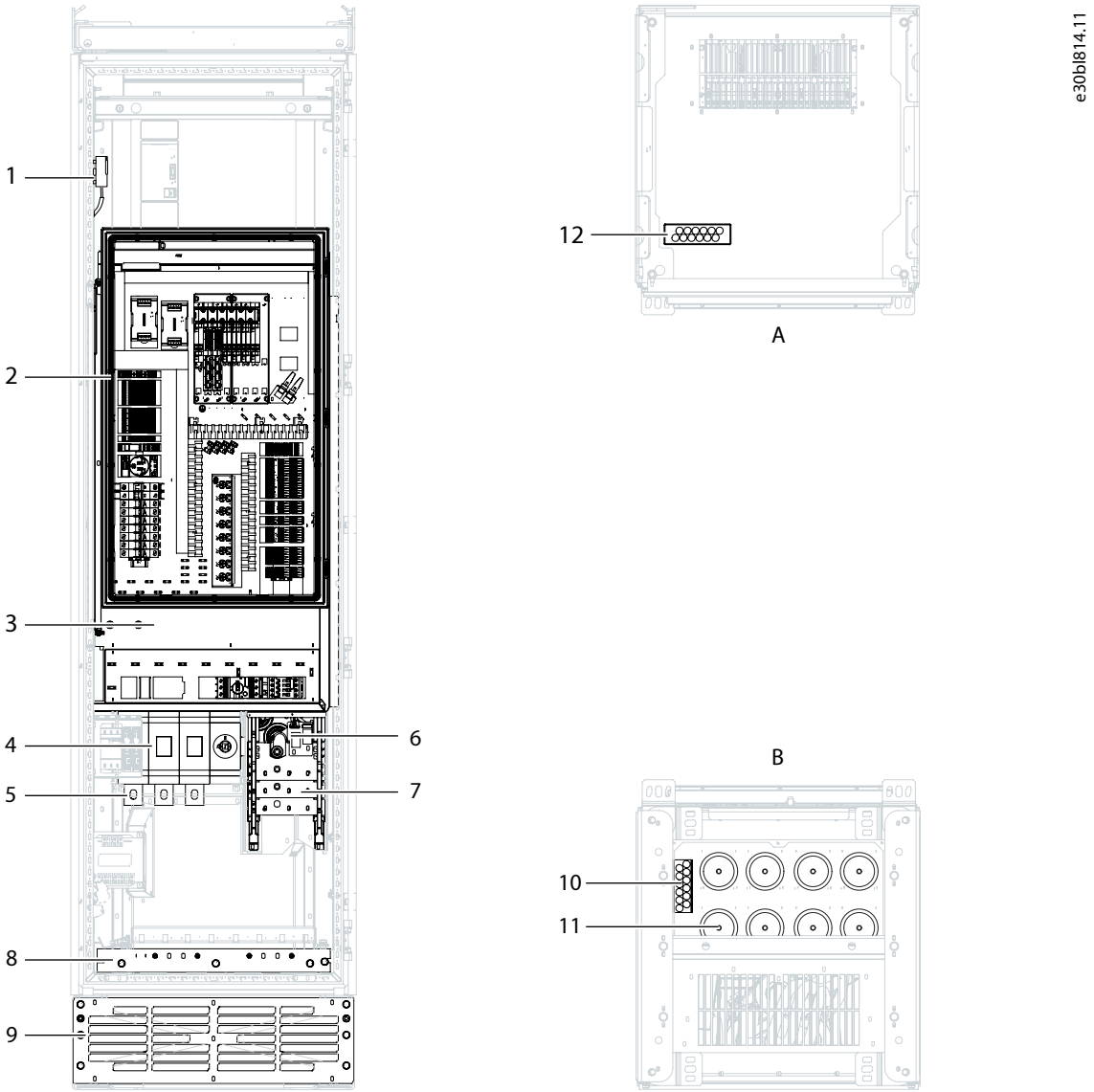

Figure 3: Interior View of FE10

1	Door fan thermostat	2	Control compartment
3	Contactor (behind control compartment)	4	Main switch (optional)
5	Mains terminals	6	dU/dt Filter
7	Motor terminals	8	PE busbar
9	Inlet air grill	10	IP54 grommet for mains and motor cables (IEC)
11	Control cable grommet, bottom	12	Control cable grommet, top
A	View from the top	B	View from the bottom

Danfoss Drives Oy © 2026.06

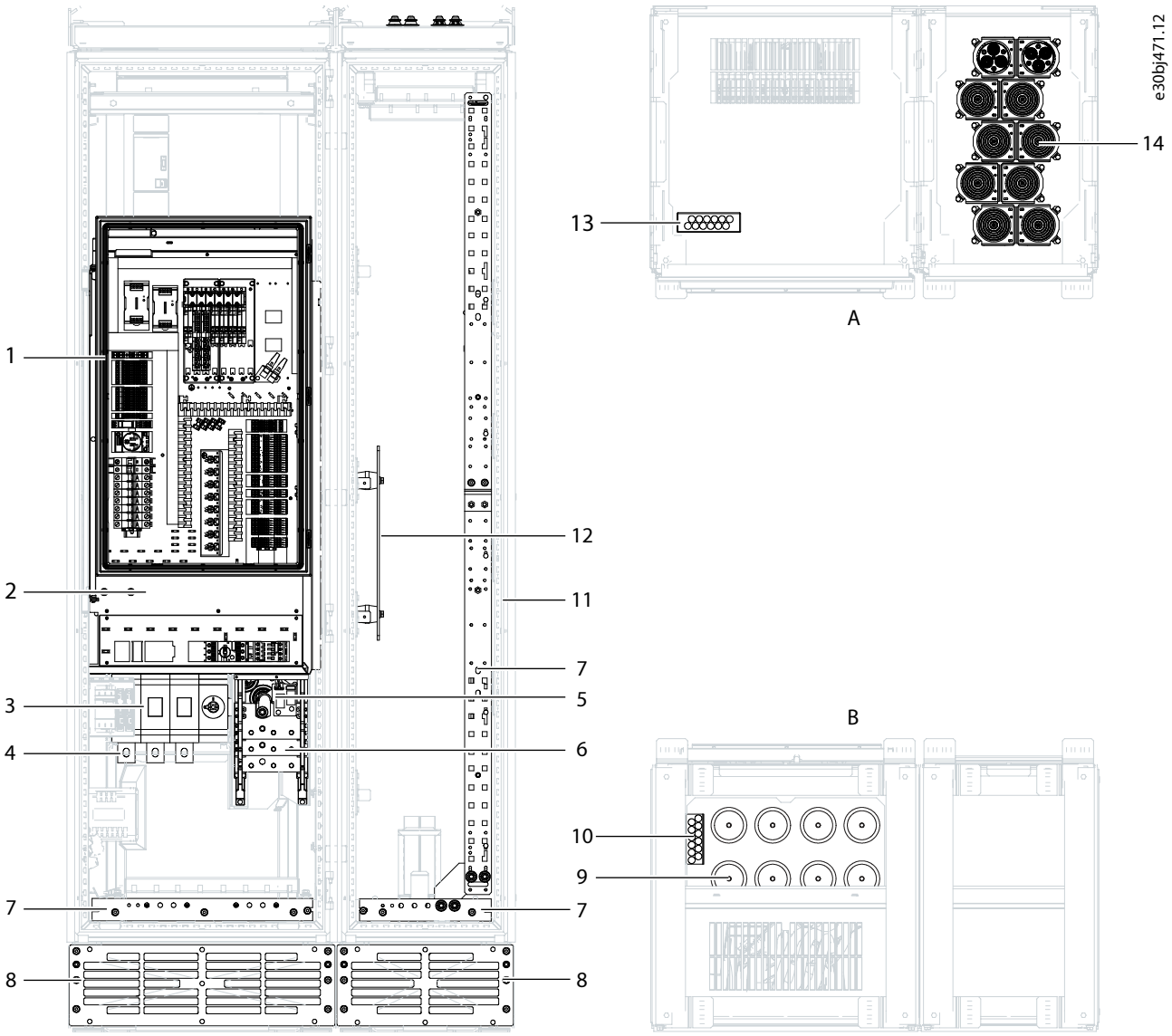

Figure 4: Interior View of FE10 with Top-entry Option

1	Control compartment	2	Contactor (behind control compartment)
3	Main switch (optional)	4	Mains terminals
5	dU/dt Filter	6	Motor terminals
7	PE busbar	8	Inlet air grill
9	IP54 grommet for mains and motor cables (IEC)	10	Control cable grommet, bottom
11	Mains terminals (behind PE busbar, Top-entry option)	12	Motor terminals (Top-entry option)
13	Control cable grommet, top	14	IP54 grommet for mains and motor cables (Top-entry option)
A	View from the top	B	View from the bottom

4.2.3 Interior View of the Cabinet, AE10 + IE10

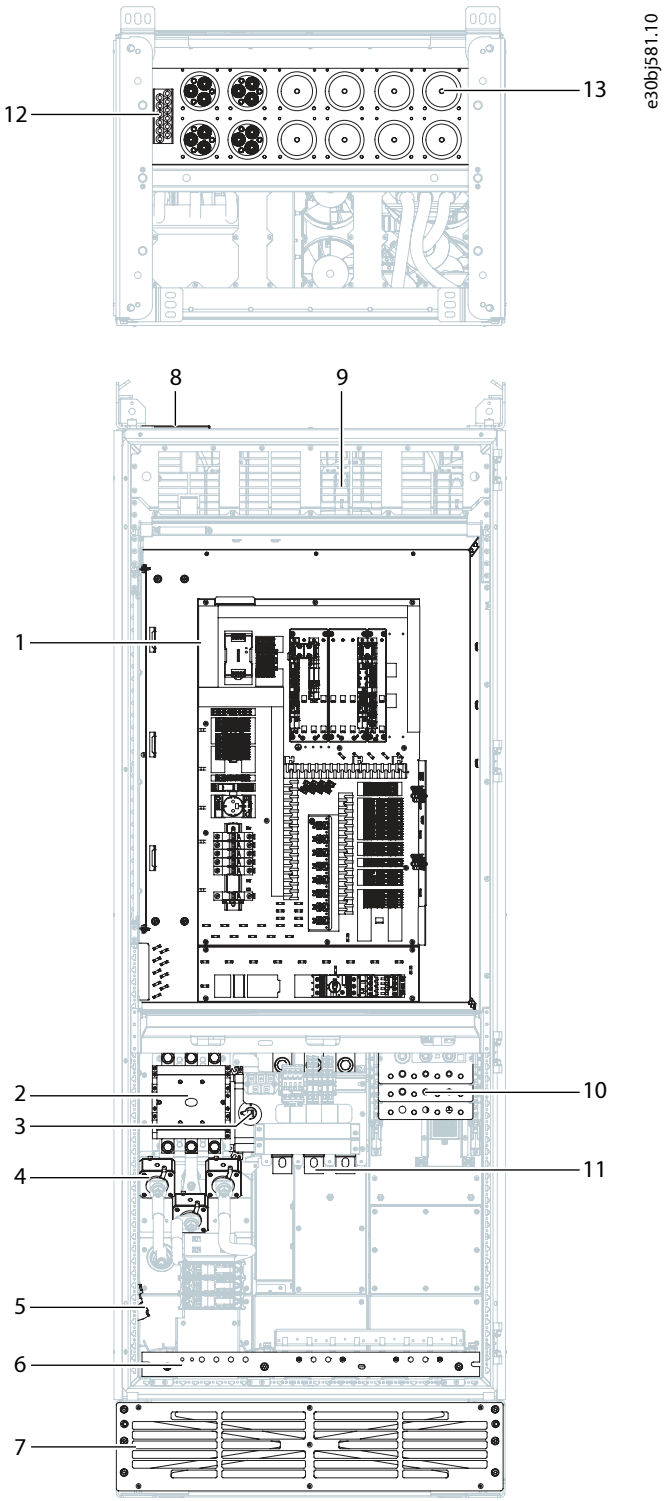

Figure 5: Interior View of the Cabinet, AE10 + IE10

1	Control compartment	2	Contactor
3	Main switch	4	AC fuses
5	Motor fan control/supply terminals (+ICFI1-4), AUX AC supply terminals (+IHAS), motor heater supply (+IAMH)	6	PE busbar
7	Inlet air grill	8	Control cable grommet, top

Danfoss Drives Oy © 2026.06

9	DC fuses, behind the touch protection plate	10	Motor terminals
11	Mains terminals	12	Control cable grommet, bottom
13	IP54 grommet for mains and motor cables (IEC)		

4.2.4 Interior View of the Cabinet, 2 x AE10 + 2 x IE10

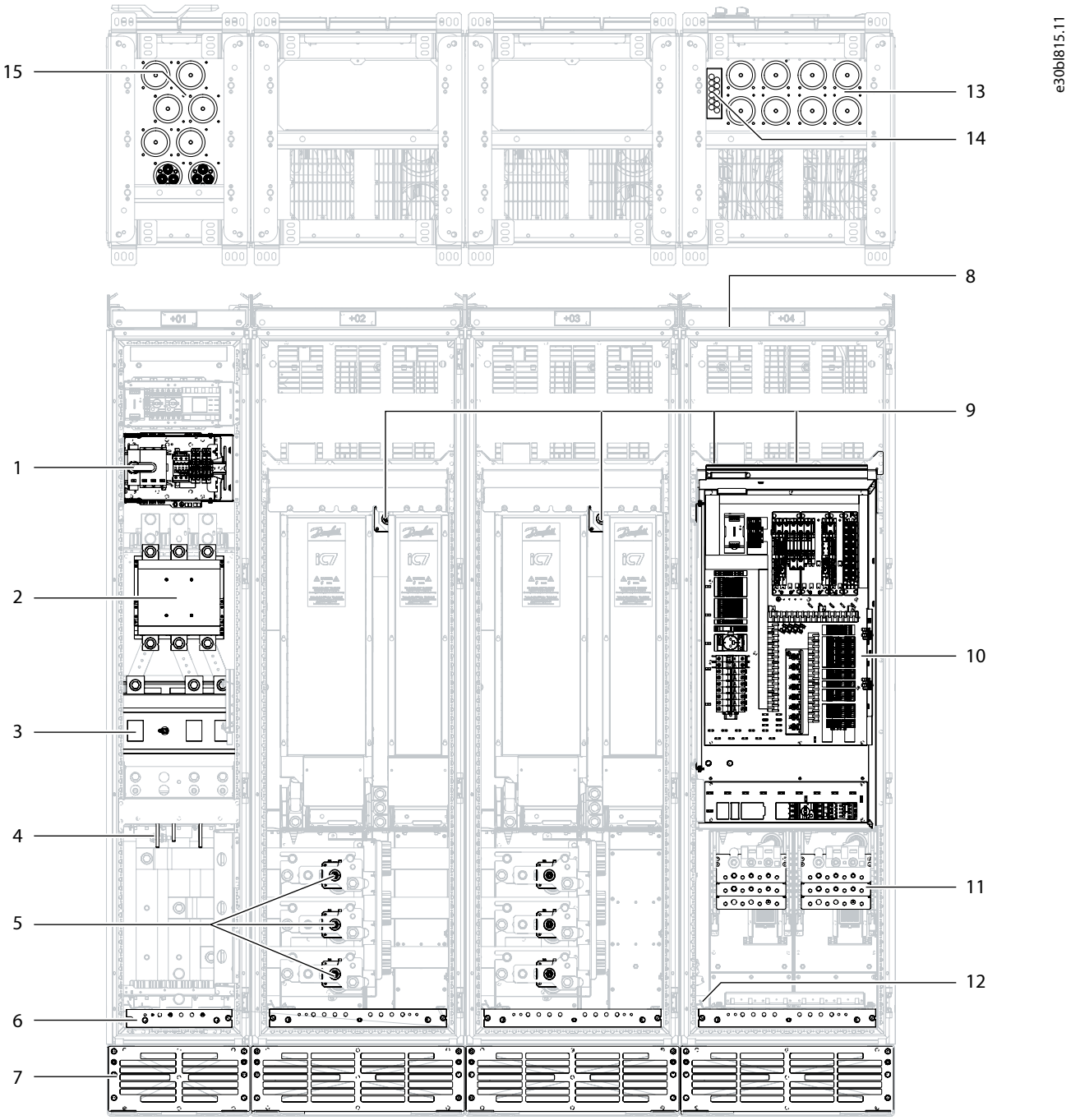

Figure 6: Interior View of the Cabinet, 2 x AE10 + 2 x IE10

1	Pre-charging circuit	2	Contactor
3	Main switch	4	Mains terminals
5	AC fuses	6	PE busbar

7	Inlet air grill	8	Control cable grommet, top
9	DC fuses	10	Control compartment
11	Motor terminals	12	Motor fan control/supply terminals (+ICFI1-4), Auxiliary AC supply terminals (+IHAS), behind PE busbar
13	IP54 grommet for motor cables (IEC)	14	Control cable grommet, bottom
15	IP54 grommet for mains cables (IEC)		

4.2.5 Interior View of the Cabinet, AE11 + IE11

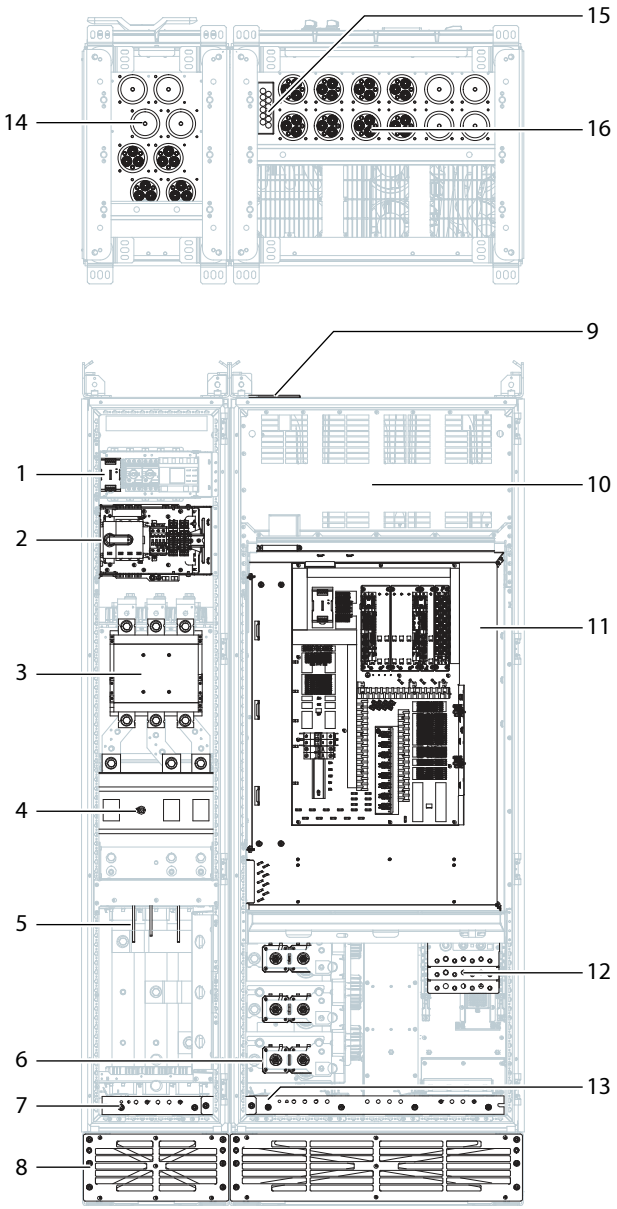

Figure 7: Interior View of the Cabinet, AE11 + IE11

1	Auxiliary AC voltage transformer (+IHAT)	2	Pre-charging circuit
3	Contactor	4	Main switch
5	Mains terminals	6	AC fuses
7	PE busbar	8	Inlet air grill

Danfoss Drives Oy © 2026.06

9	Control cable grommet, top	10	DC fuses, behind the touch protection plate
11	Control compartment	12	Motor terminals
13	Motor fan control/supply terminals (+ICF1-4), Auxiliary AC supply terminals (+IHAS), motor heater supply (+IAMH), behind the PE busbar	14	IP54 grommet for mains cable (IEC)
15	Control cable grommet, bottom	16	IP54 grommet for motor cable (IEC)

4.2.6 Interior View of the Cabinet, 2 x AE11 + 2 x IE11

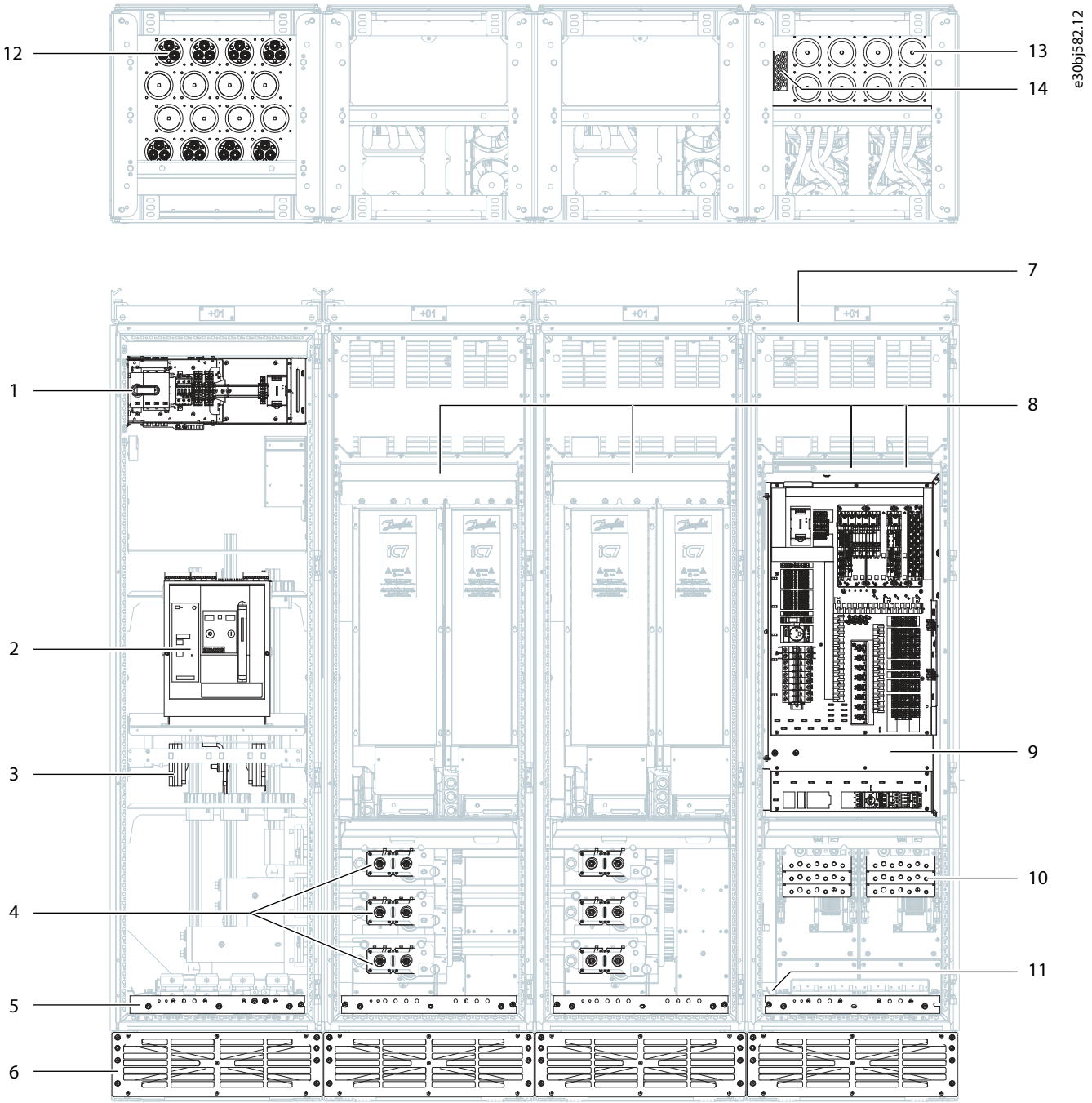

Figure 8: Interior View of the Cabinet, 2 x AE11 + 2 x IE11

1	Charging circuit	2	Air circuit breaker
3	Mains terminals	4	AC fuses
5	PE busbar	6	Inlet air grill
7	Control cable grommet, top	8	DC fuses, behind the touch protection plate
9	Control compartment	10	Motor terminals
11	Motor fan control/supply terminals (+ICFI1-4), Auxiliary AC supply terminals (+IHAS), behind PE busbar	12	IP54 grommet for mains cables (IEC)
13	IP54 grommet for motor cables (IEC)	14	Control cable grommet, bottom

4.2.7 Interior View of the Cabinet, 3 x AE11 + 3 x IE11

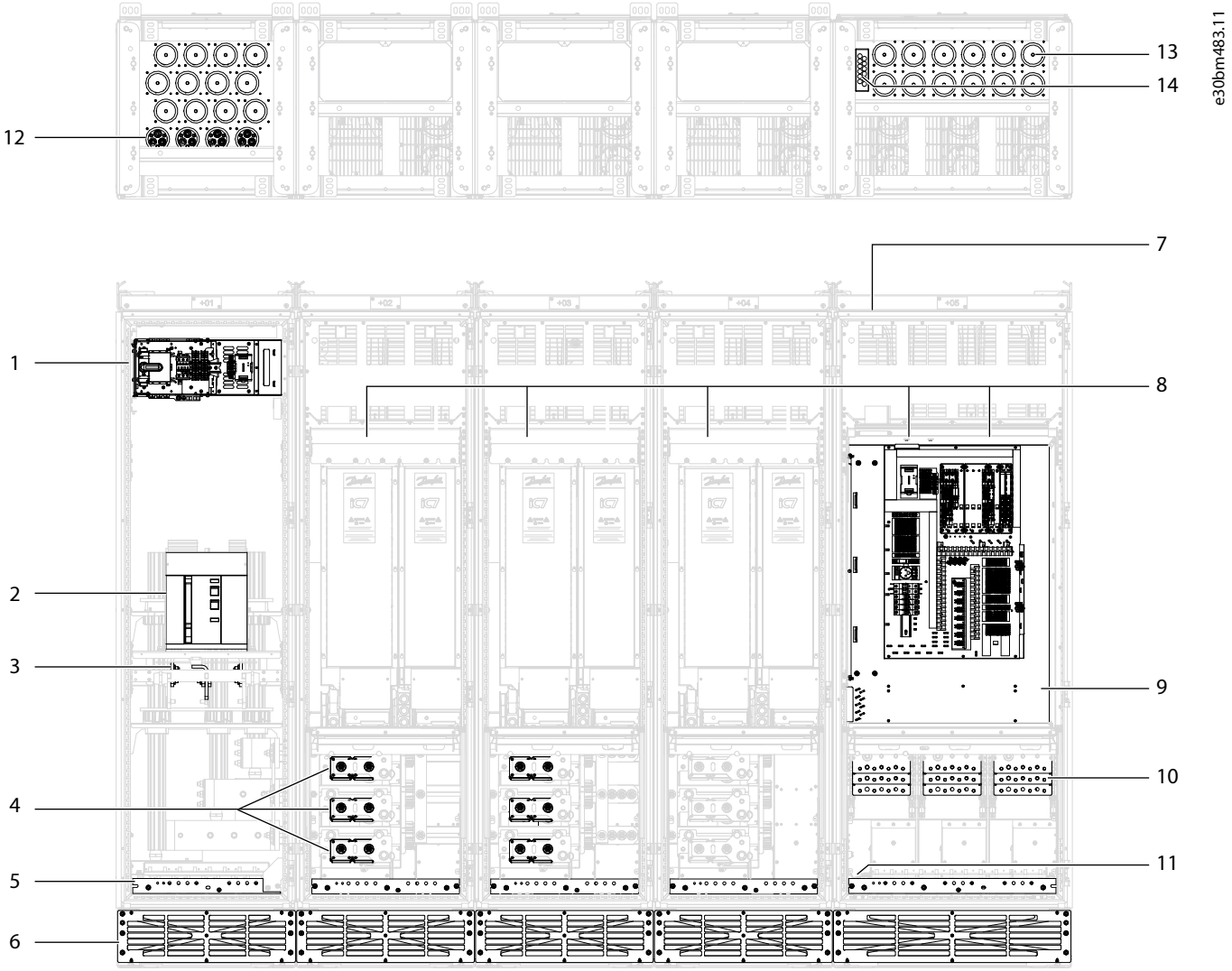

Figure 9: Interior View of the Cabinet, 3 x AE11 + 3 x IE11

1	Charging circuit	2	Air circuit breaker
3	Mains terminals	4	AC fuses
5	PE busbar	6	Inlet air grill
7	Control cable grommet, top	8	DC fuses, behind the touch protection plate
9	Control compartment	10	Motor terminals

Danfoss Drives Oy © 2026.06

11	Motor fan control/supply terminals (+ICFI1-4), Auxiliary AC supply terminals (+IHAS), behind PE busbar	12	IP54 grommet for mains cables (IEC)
13	IP54 grommet for motor cables (IEC)	14	Control cable grommet, bottom

4.3 Description of the Frame Designation

A frame designation is used to refer to different types of iC7 series drives. The frame designation describes the function, mechanical variant, and size of the drive.

Example

The frame designation can have this format, for example:

AE11

Table 4: Description of the Frame Designation

Code	Description
A	**Function** F = 6-pulse frequency converter A = Active front end I = Inverter
E	**Mechanical variant** E = enclosed drive
11	**Size** 9, 10, or 11

4.4 Weights

Table 5: Weights of the Enclosed Drives (Drive + Cabinet)

Product	Weight [kg]	Weight [lb]
FE9	305	672
FE10	420	926
AE10 + IE10	690	1520
AE11 + IE11	980	2160
2 x AE10 + 2 x IE10	1580	3480
2 x AE11 + 2 x IE11	1920	4230
3 x AE11 + 3 x IE11	2750	6063

4.5 Description of the Model Code

The model code is made of standard codes and plus codes. Each part of the model code agrees to the data in the order.

Example

The model code can have this format, for example:

iC7-60EA3A05-880AE21F3+XXXX

Table 6: Description of the Model Code

Code	Description
iC7-60	**Product group**
EA	**Product category** EA = air-cooled enclosed drive
3A	**Product type** 3N = 3-phase 6-pulse 3A = 3-phase AFE (regenerative) 3H = 3-phase LHD (low-harmonic)
05	**Voltage rating** 05 = 380–500 V AC 07 = 525–690 V AC
-880A	**Current rating ($I_{L(1/5)}$)** -880A = 880 A -1260 = 1260 A
E21	**Protection rating** E21 = IP21/UL type 1 E54 = IP54/UL type 12
F3	**EMC level** F3 = C3 industry compliance F4 = C4 system component
+XXXX	**Options** See separate list.

4.6 Product Label

The product label gives information about the product.

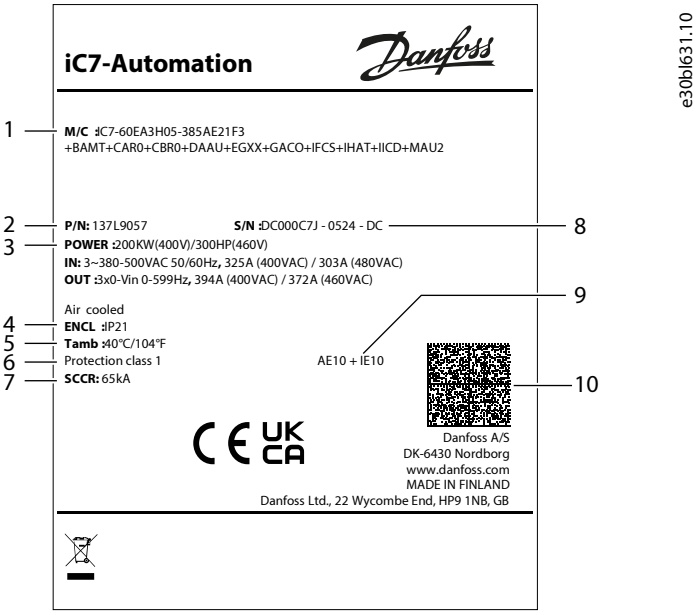

Figure 10: Product Label for iC7-Automation Enclosed Drives

Danfoss Drives Oy © 2026.06

1	Model code of the product	2	Code number
3	Power, input, and output ratings	4	Protection rating
5	Temperature rating for ambient air	6	Protection class
7	Short-circuit current rating	8	Serial number
9	Frame designation	10	2D code accessible with a Datamatrix ECC 200 compatible barcode reader

4.7 Labels on the Power Units

The power units in the enclosed drive have individual labels on the front. The labels include technical specifications and data for identifying the power unit.

For descriptions of the labels, see:

- FE9, FE10: *iC7-Automation Frequency Converters Design Guide*
- AE10, IE10, AE11, IE11: *iC7 Series Air-cooled System Modules Design Guide*

4.8 Lifting the Enclosed Drive

The enclosed drive is delivered on a wooden pallet. A delivery containing 1 cabinet is delivered horizontally, but a delivery containing many cabinets is delivered vertically.

⚠ WARNING

LIFTING HEAVY LOAD

Not following the safe lifting instructions can result in death or serious injury and damage to the equipment.

- Follow local safety regulations on lifting.
- Use a lifting device that is in proper working condition and appropriate for the weight of the load.
- Test lift the load to verify the proper center of gravity. Reposition the lifting point if not level.
- Do not walk under, or place any part of your body under a suspended load.

⚠ WARNING

SWINGING HAZARD DURING LIFTING

The swing effect can cause serious injury and damage to the equipment. It occurs when lifting the product into a vertical position, just before the product reaches vertical position, when the center of gravity of the product surpasses the floor support point.

- Make sure that the lifting ropes are properly attached.
- Secure the lifting area.
- Lift the product slowly and carefully.

1. Remove the package from the drive.
2. Pay attention to the center of gravity. The product is top and rear heavy.
3. If the drive is delivered horizontally, lift it to an upright position.
   a. Put the lifting hooks in the 2 front lifting loops on the top of the cabinet.

      The minimum lifting angle is 60°.

   b. Lift the drive to an upright position.

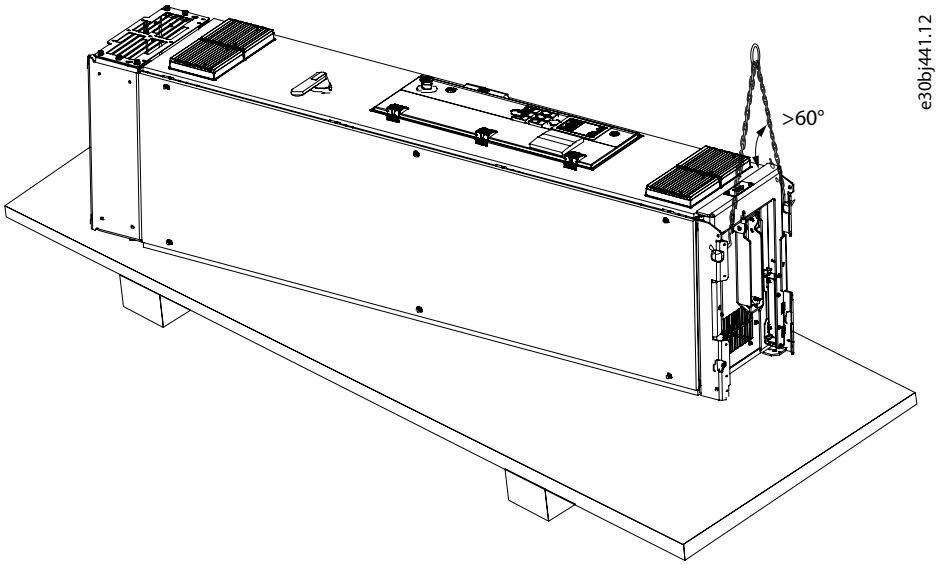

Figure 11: Lifting the Enclosed Drive to an Upright Position

4. Put the lifting hooks in 4 lifting loops on the top of the cabinet.

   The minimum lifting angle is 60°.

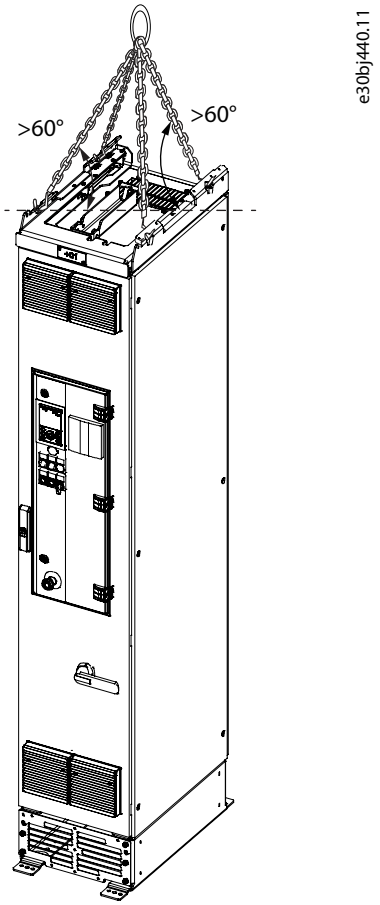

Figure 12: Lifting the Enclosed Drive

Danfoss Drives Oy © 2026.06

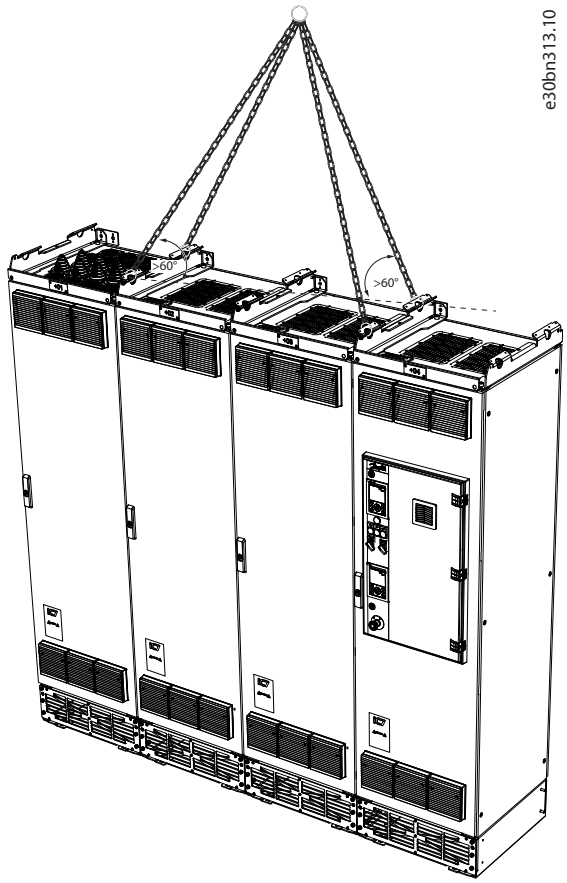

Figure 13: Lifting the Enclosed Drive with Several Cabinet Sections

5. Lift the drive to the required position.

5 Mechanical Installation

5.1 Storing the Enclosed Drive

5.1.1 Storage Requirements

If it is necessary to store the product before installing it, follow these instructions.

Keep the product in the original packaging. Make sure that the ambient storage conditions correspond to these requirements:

- Temperature: -40...+70 °C (-40...+158 °F)
- Humidity: 0...95%, no condensation

5.1.2 Storage of 2–12 Months

If the package is kept in storage for more than 2 months, keep it in controlled conditions.

1. Make sure that the temperature variation is small.
2. Make sure that the humidity is less than 50%.

5.1.3 Storage of over 12 Months (FE9 and FE10)

If the package is kept in storage for more than 12 months, do these steps every 12 months, to reform the capacitors to prevent damage to the capacitors.

1. Connect power to the drive.
2. Keep the power on for a minimum of 2 hours.
3. Disconnect the power.
4. Wait for the correct discharge time before removing the drive and storing it again.

5.1.4 Storage of Several Years

If the package is kept in storage for several years, reform the capacitors every 12 months to prevent damage to the capacitors.

1. Connect a DC supply with adjustable current limit to the DC+ and DC- terminals.
2. Set the current limit (250 mA). In case of parallel power units, multiply the value with the number of power units.
3. Set DC voltage (1.35 x U_n AC), where U_n is the drive nominal voltage.
4. Keep the power on for a minimum of 1 hour.
5. Disconnect the DC supply from the DC+ and DC- terminals.

5.2 Installation Requirements

- Make sure that the ambient conditions at the installation location comply with the specifications in 9.10.3 Ambient Conditions.
- Install the drive on a solid and level surface.
- Make sure that the mounting surface can support the weight of the drive. See 4.4 Weights.
- Make sure that the mounting surface is non-combustible and that there is no combustible material in the mounting area.

5.3 Installing the Enclosed Drive

1. Secure the enclosed drive to the floor and to the wall using all the mounting holes.

   There are 2 mounting holes at the rear top, 6 mounting holes at the front bottom, and 6 mounting holes at the rear bottom.

Danfoss Drives Oy © 2026.06

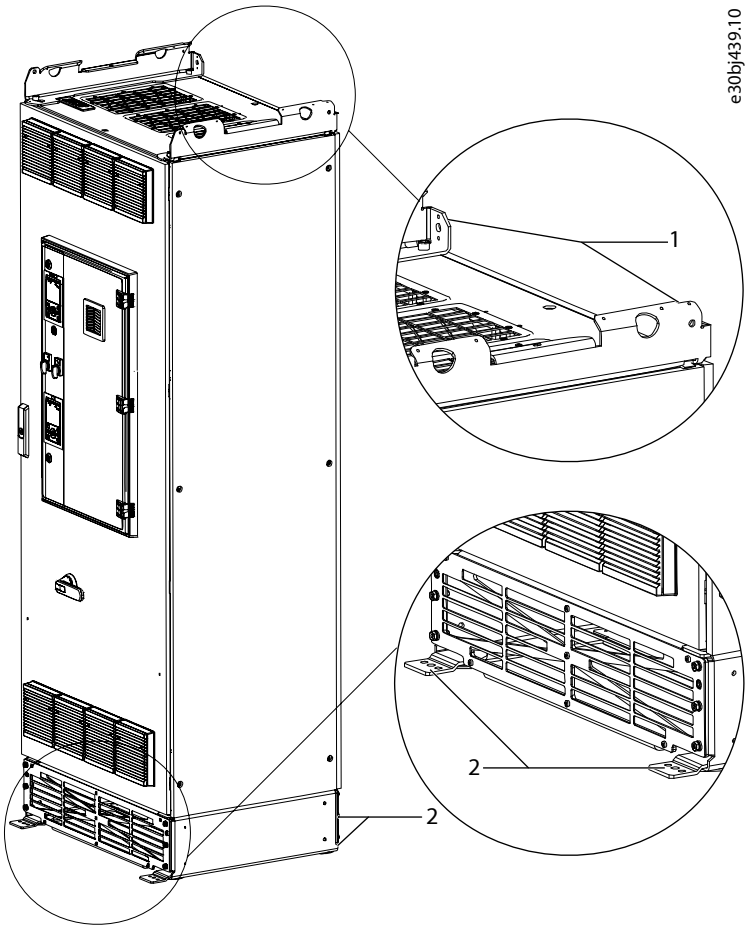

Figure 14: Installing the Enclosed Drive, FE9, FE10

1	Mounting holes at the top	2	Mounting holes at the bottom

5.4 Installing the Enclosed Drives Back to Back

The enclosed drives can be installed back to back with other enclosed drives.

1. When installing enclosed drives back to back, leave a minimum of 100 mm (3.94 in) space between them.

   Use a spacer between the enclosed drives, for example a steel tube.

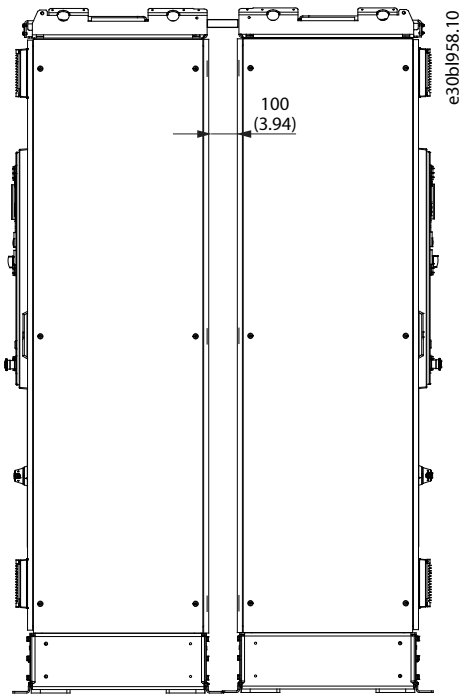

Figure 15: Installation of Cabinets Back to Back, mm (in)

2. Secure the enclosed drive to the floor and to the wall using all the mounting holes.

   There are 2 mounting holes at the rear top, 6 mounting holes at the front bottom, and 6 mounting holes at the rear bottom.

5.5 Installing the IP21 Top Cover

The IP21 top cover is included in the IP21 configuration of the product. The IP21 top cover protects the enclosed drive from dripping water. Install the IP21 top cover on top of the cabinet.

1. Attach the 2 top cover brackets to the lifting bars on top of the cabinet.

   Use 4 size M5x10 thread-forming screws.

2. Attach the top cover to the top cover brackets.

   Use 4 size M5x10 thread-forming screws.

Danfoss Drives Oy © 2026.06

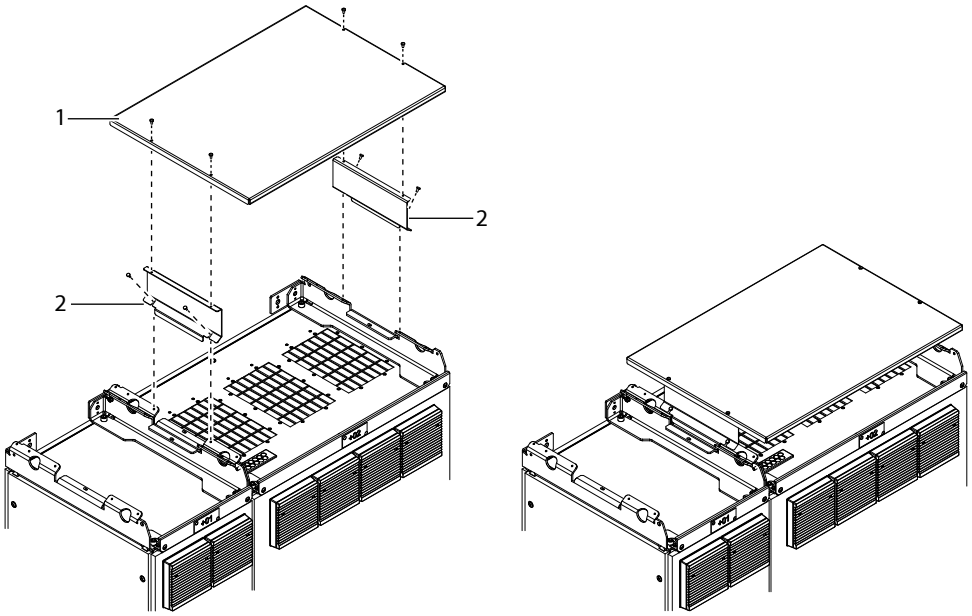

Figure 16: Installing the IP21 Top Cover

1	Top cover	2	Top cover brackets

5.6 Attaching the Top Cabling Cabinet Section

The top cabling cabinet section is delivered separately and must be attached to the other cabinet sections before use.

These instructions apply to frames 2 x AE11 + 2 x IE11 (1260 A, 400 V) and larger.

1. Unpack the packages and unscrew the products from the pallets where they are delivered.
2. Identify the cabinet sections and their order based on the number plates at the top of the cabinet sections.

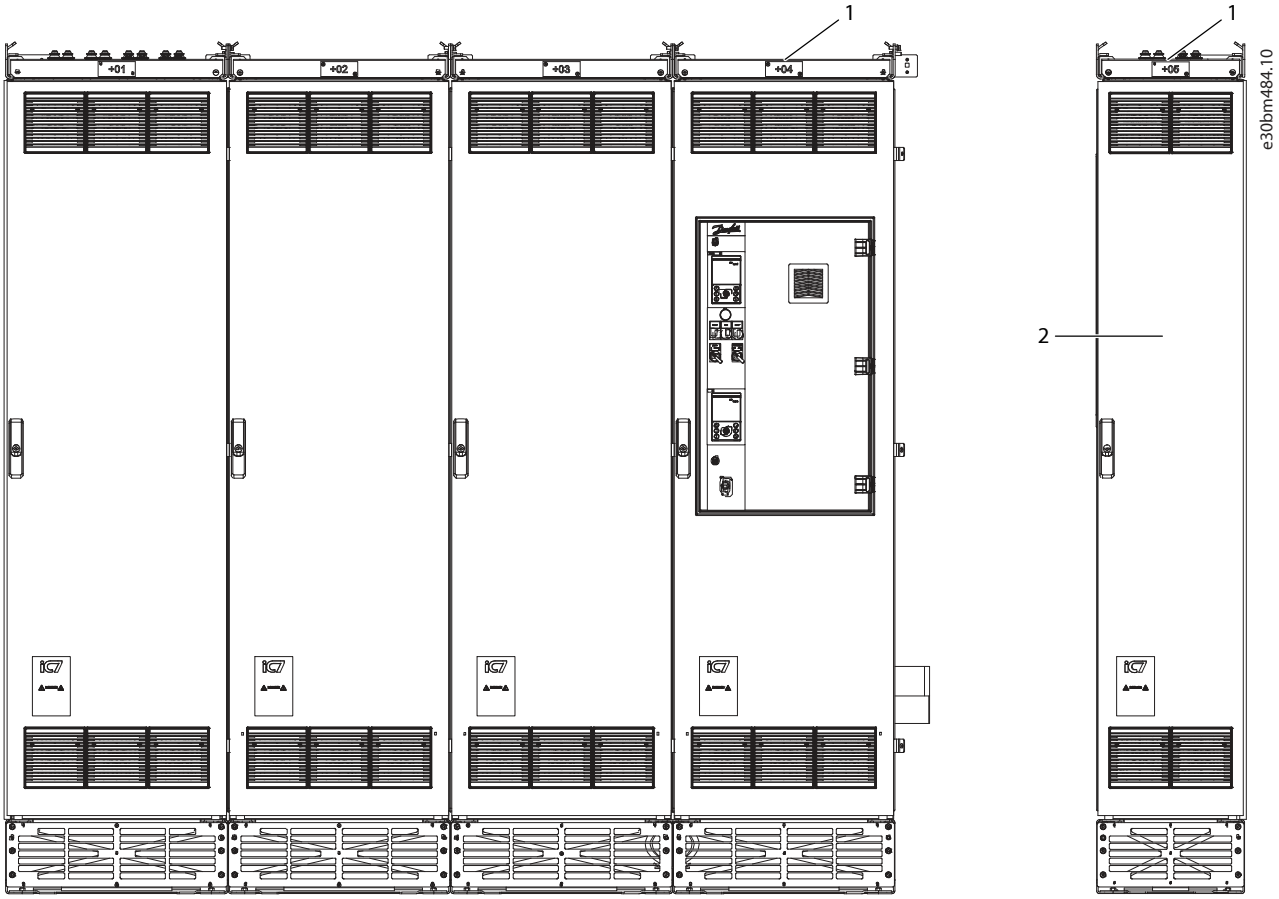

Figure 17: Attaching the Top Cabling Cabinet Section to the Other Cabinet Sections (Example)

1	Number plates	2	Top cabling cabinet section

3. Lift the cabinet sections next to each other in numerical order from the smallest to the largest. Leave enough space behind the cabinet sections for working.

   See 4.8 Lifting the Enclosed Drive.

4. Open the top cabling cabinet section door. Remove the front grill and the touch protection.

Danfoss Drives Oy © 2026.06

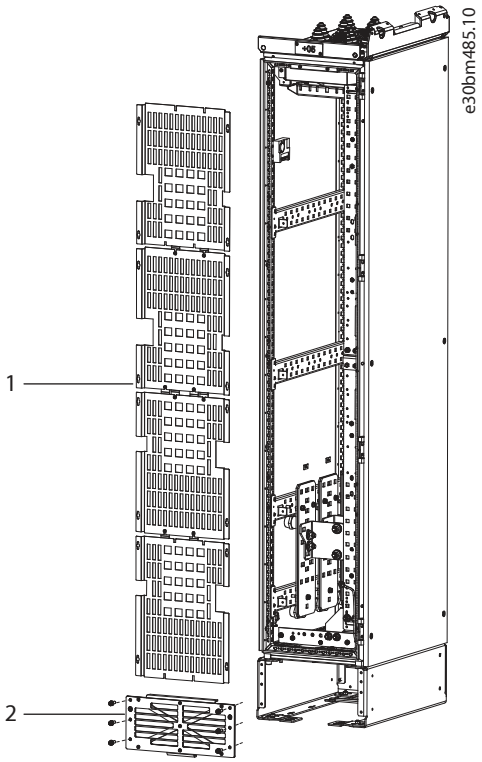

Figure 18: Removing the Front Grill and the Touch Protection

1	Touch protection	2	Front grill

5. Remove the back wall of the top cabling cabinet section and the back plate of the plinth of the inverter cabinet section.

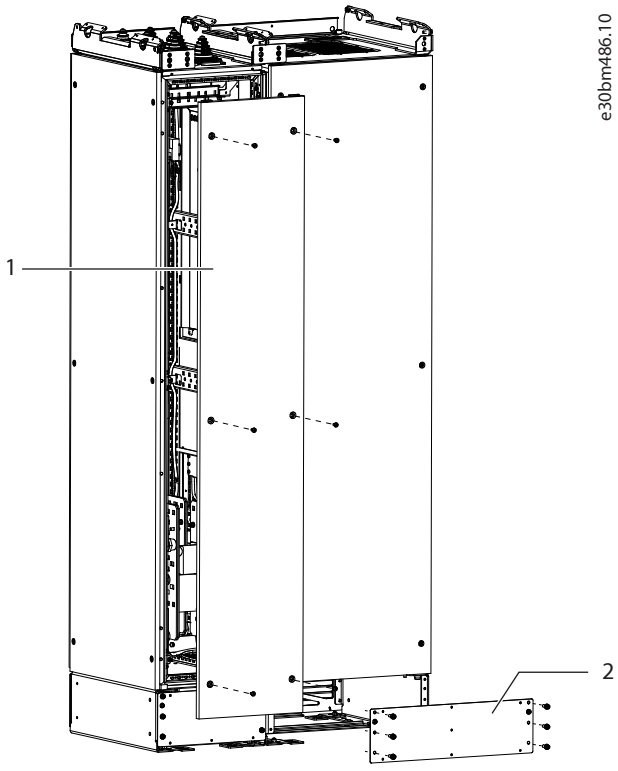

Figure 19: Removing the Back Wall and the Back Plate

1	Back wall	2	Backplate

6. Install the Rittal seal to the inverter cabinet section. The ends of the seal must meet at the bottom of the cabinet section.

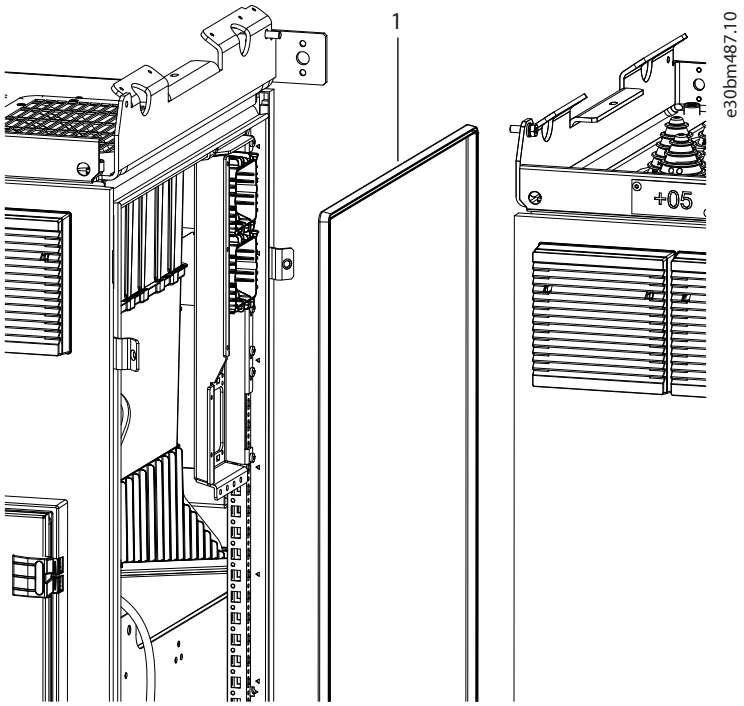

Figure 20: Installing the Seal to the Inverter Cabinet Section

1	Seal

7. Lift the top cabling cabinet section next to the inverter cabinet section.
8. The connection pieces are preinstalled in the inverter cabinet section. Attach them to the top cabling cabinet section.
   - Use 6 size M6x14 CS screws.
   - Use the tightening torque of 4 Nm (35 in-lb).

Danfoss Drives Oy © 2026.06

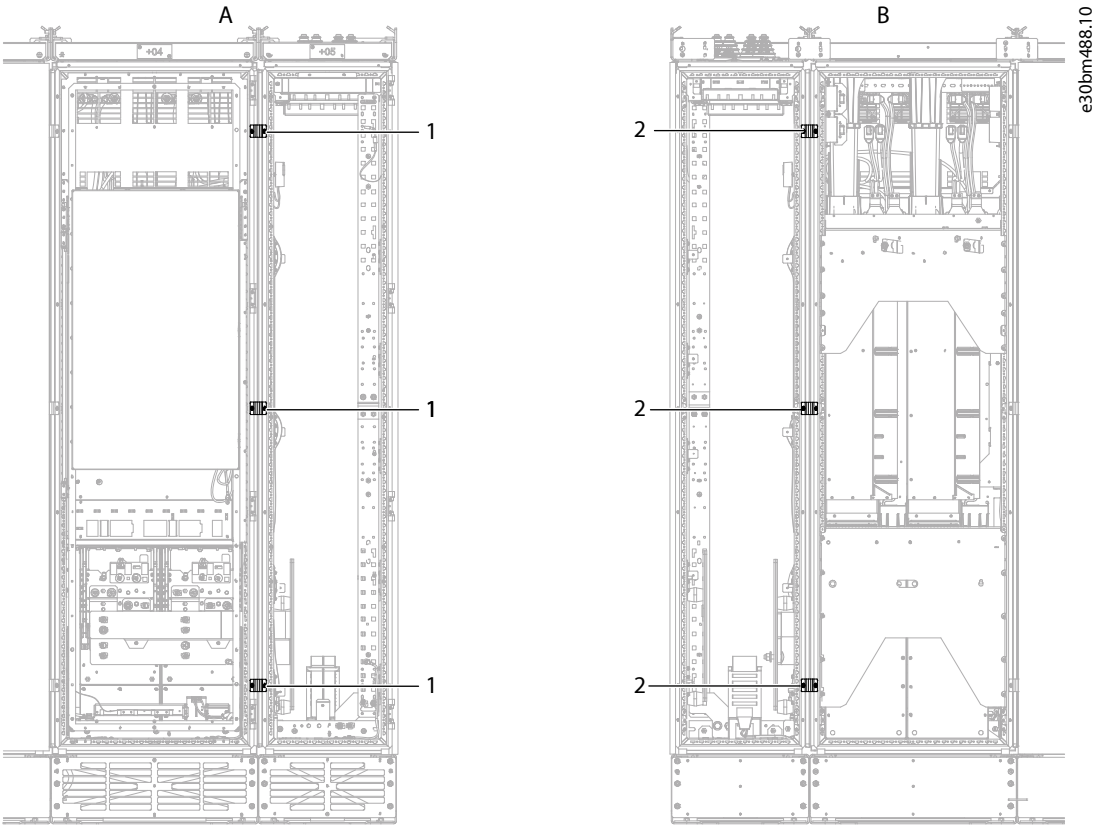

Figure 21: Attach the Connection Pieces to the Top Cabling Cabinet Section

A	View from the front	B	View from the back
1	Connection pieces in the front of the cabinet section	2	Connection pieces at the back of the cabinet section

9. Attach the cabinet sections from the plinths.

   - The screws can be found in the accessory bag.
   - Use 4 size M8x25 KOMBI TX screws.
   - Use the tightening torque 20 Nm (180 in-lb).

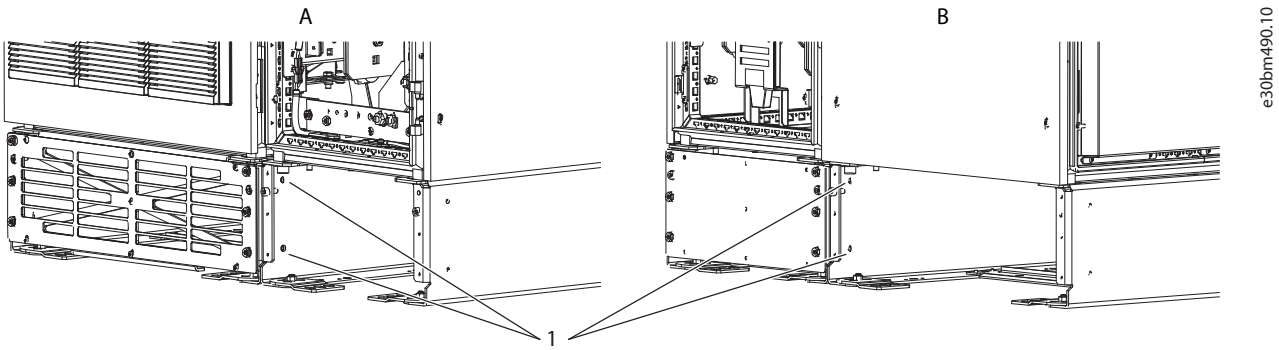

Figure 22: Attaching the Cabinet Sections from the Plinths

A	View from the front	B	View from the back
1	Screw holes		

10. Reattach the front grill and the back plate of the plinths.

Use the tightening torque 20 Nm (180 in-lb).

11. Attach the inverter and top cabling cabinet sections at the top.
    a. Attach the lifting bars of the inverter and top cabling cabinet sections.
       - Use 2 size M8x25 combi screws.
       - Use the tightening torque 20 Nm (177 in-lb).
    b. Install the lifting bar connection plate between the inverter and top cabling cabinet sections at the back side.
       - Use 4 size M5x10 CS TF screws.
       - Use the tightening torque 3 Nm (27 in-lb).

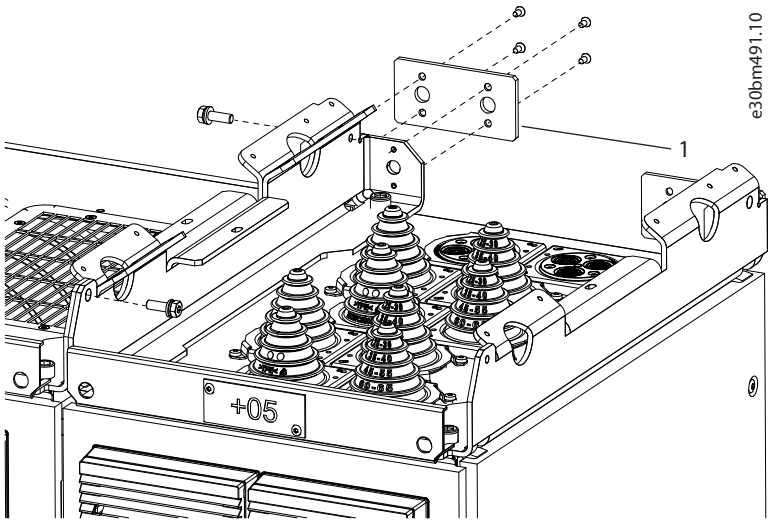

Figure 23: Lifting Bar Connection Plate

1	Lifting bar connection plate

12. If the cabinet heater option +IBCH was ordered, locate the cabinet heater.

    The cabinet heater is delivered inside the inverter cabinet section with the wiring connected.

13. Route the cabinet heater under the busbars to the top cabling cabinet section.
14. Install the cabinet heater.
    - Use 4 size M5x10 TF screws.
    - Use the tightening torque 3 Nm (27 in-lb).

Danfoss Drives Oy © 2026.06

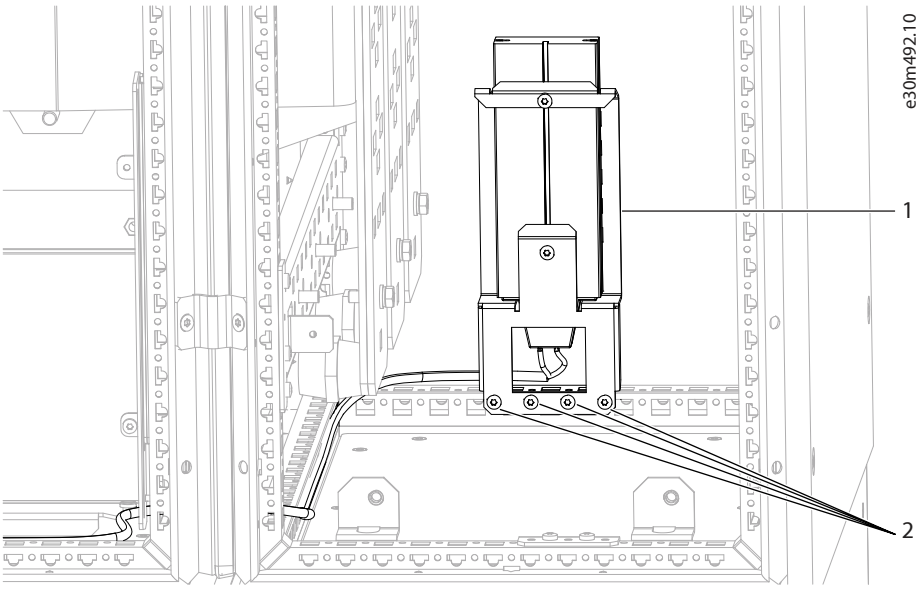

Figure 24: Installing the Cabinet Heater

1	Cabinet heater	2	Screws

15. Install the PE connection busbar.

- Use 2 size M8x25 KOMBI TX screws.
- Use the tightening torque 20 Nm (180 in-lb).

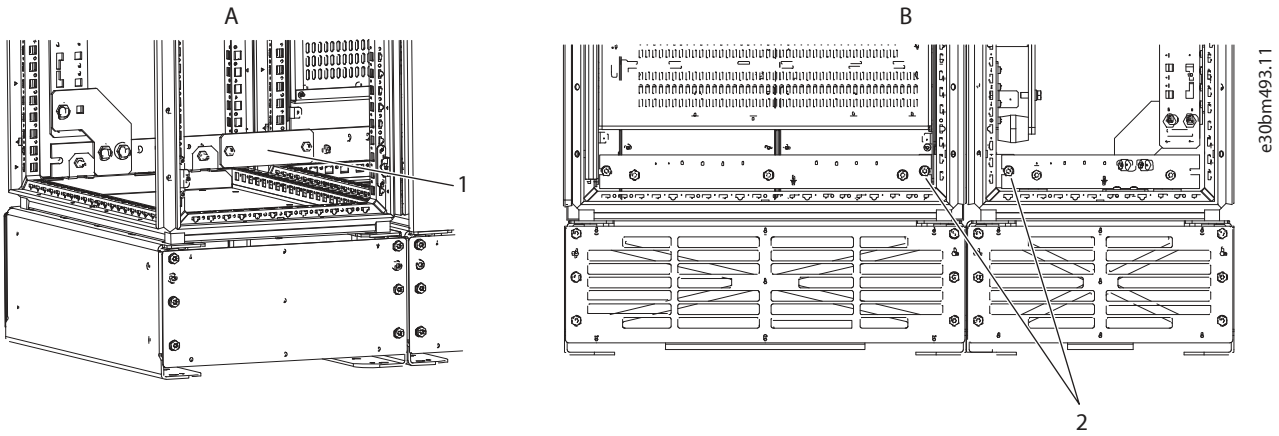

Figure 25: Installing the PE Connection Busbar

A	View from the back	B	View from the front
1	PE connection busbar	2	Screws

16. Connect the inverter busbars to the busbars of the top cabling cabinet section.

- Use 6 size M12x45 carriage bolts, M12 plain washers, M12 spring washers, and M12 nuts.
- Use the tightening torque 70 Nm (620 in-lb).

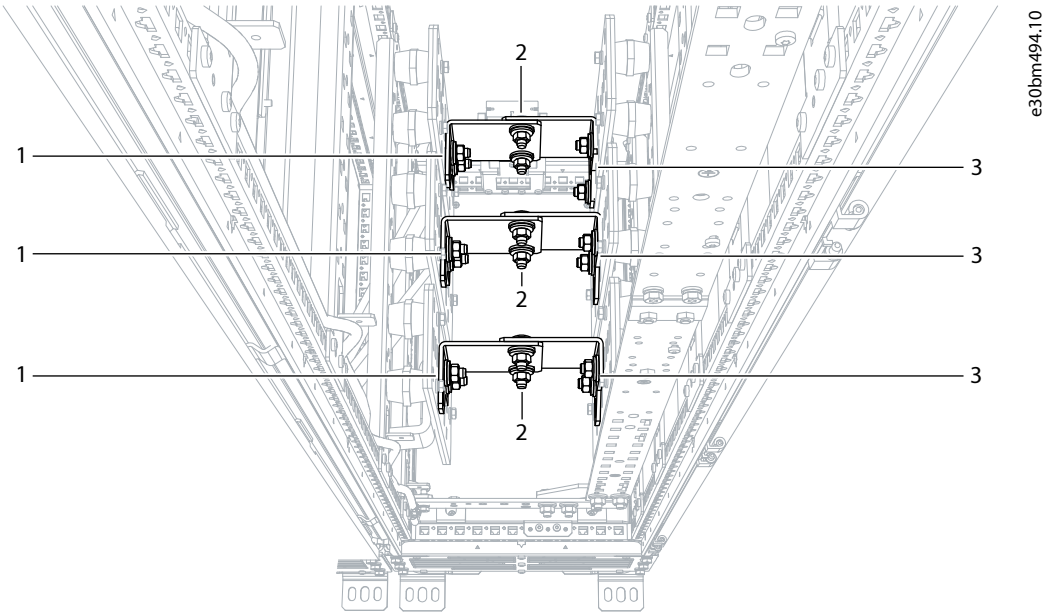

Figure 26: Busbar Connection

1	Inverter busbars	2	Connection with bolts
3	Busbars of the top cabling cabinet section		

17. If there are top fans, connect their wiring inside the top cabling cabinet section.

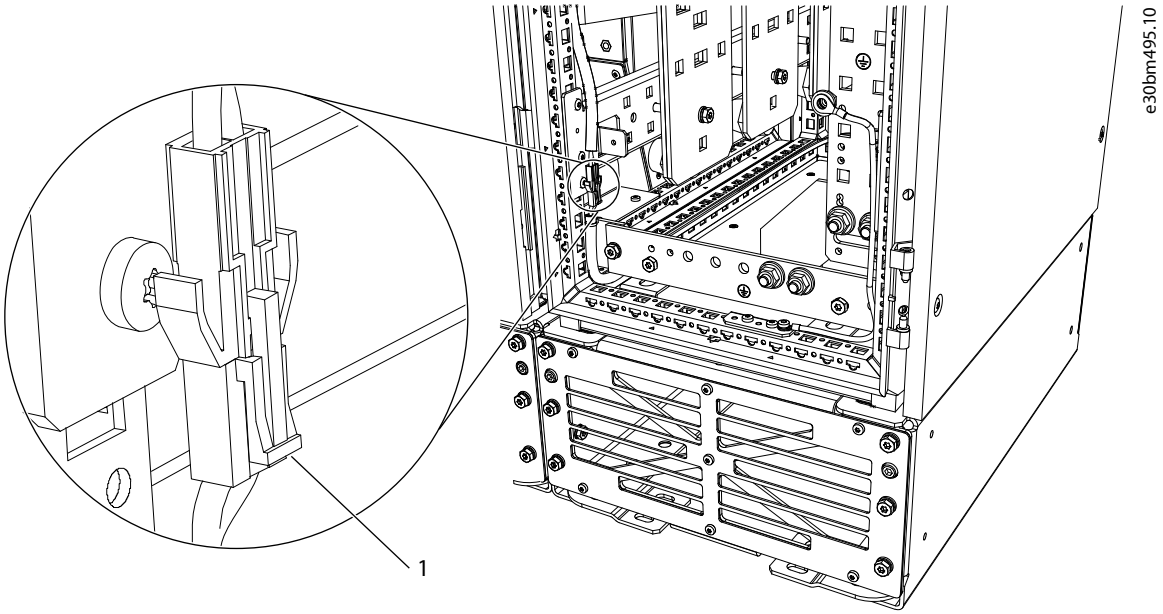

Figure 27: Wiring of the Top Fans

1	Connection point

18. Reattach the back wall to the top cabling cabinet section with 6 screws.

Use the tightening torque 3 Nm (27 in-lb).

Danfoss Drives Oy © 2026.06

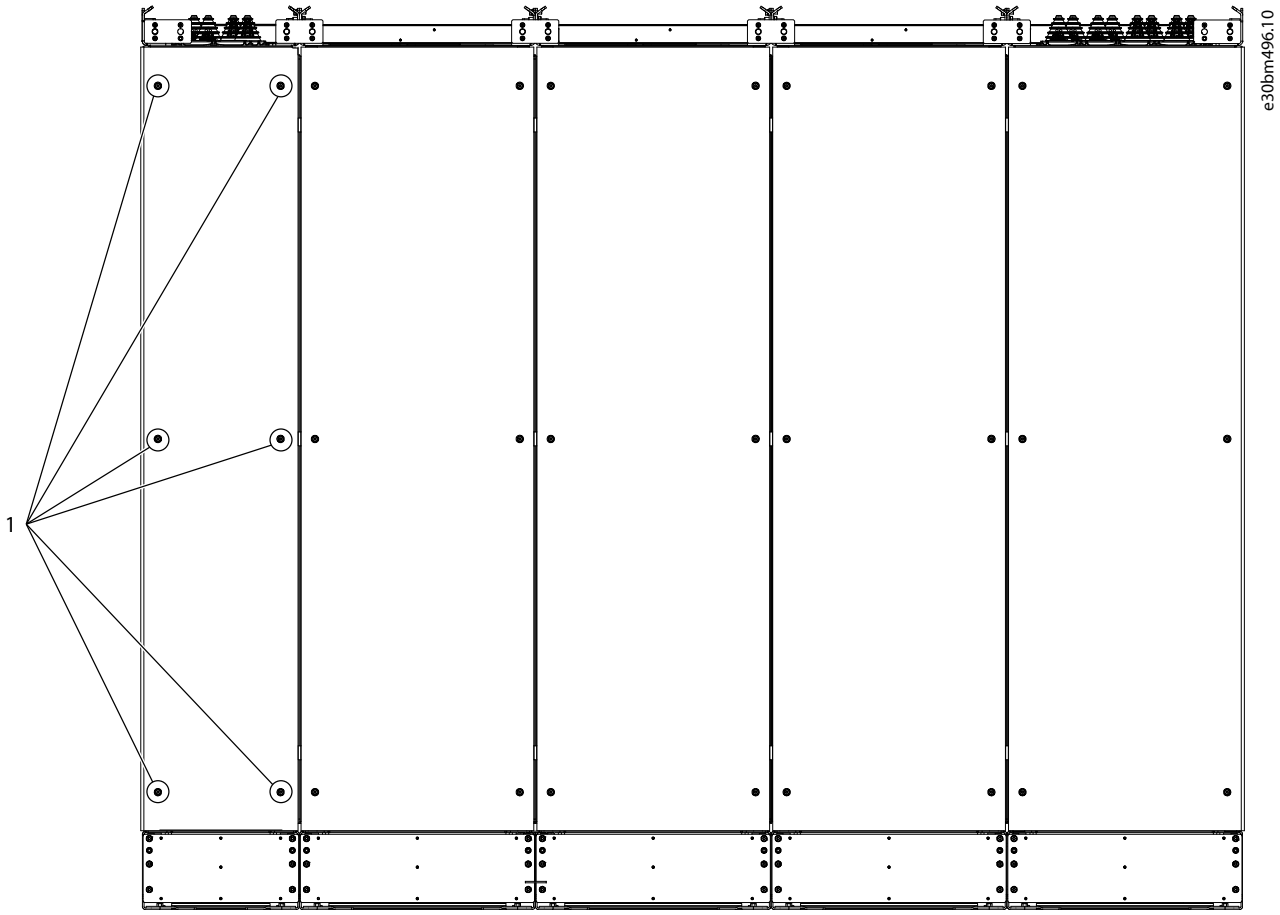

Figure 28: Attaching the Back Wall to the Cabinet Section

1	Screws

19. Reattach the touch protection.

    To comply with the EMC class, attach all the screws that link the 2 touch protections together.

20. Close the cabinet section door.

5.7 Cooling Requirements

5.7.1 General Cooling Requirements

The power units produce heat in operation. The fans circulate air and decrease the temperature of the drive. Make sure that there is sufficient free space around the drive.

Some free space in front of the drive is also necessary for maintenance. It must be possible to open the cabinet door. Two or more drives can be installed side by side.

All the product variants have a segregated cooling channel. The airflow enters the segregated cooling channel through the front grill or the back grill of the plinth. There is an auxiliary cooling channel for the control compartment. There are 3 cooling methods available:

- Default cooling
- Cooling air output flange option
- Back-channel cooling option

The air must move freely and efficiently through the cabinet and the drive. Make sure that the hot air goes out of the cabinet and does not come back into the cabinet.

Make sure that the temperature of the cooling air does not become higher than the maximum ambient operating temperature or lower than the minimum ambient operating temperature of the drive.

Table 7: Airflow of Different Fans of the Cabinet

Cabinet	Main cooling channel [m^3/hr (cfm)]	Auxiliary cooling channel [m^3/hr (cfm)]
FE9, IP21	340 (200)	422 (248)
FE9, IP54	340 (200)	254 (149)
FE10, IP21	340 (200)	675 (397)
FE10, IP54	340 (200)	447 (263)
AE10, IE10	2760 (1624)	1050 (618)
AE11, IE11	2760 (1624)	1480 (871)
2 x AE10, 2 x IE10	5520 (3249)	2530 (1489)
2 x AE11, 2 x IE11	5520 (3249)	2745 (1615)
3 x AE11, 3 x IE11	8280 (4873)	3795 (2234)

5.7.2 Default Cooling

Airflow in the default cooling of the enclosed drives is intake in the front, output at the top. Make sure that there is sufficient free space above the cabinet. The minimum space includes the lifting bars on top of the cabinet. Also make sure that there are no obstacles that can stop the airflow.

Table 8: Minimum Space above the Cabinet

Drive	Minimum space above the cabinet [mm (in)]
FE9, FE10	225 (8.9)
AE10, AE11, IE10, IE11	200 (7.9)

Danfoss Drives Oy © 2026.06

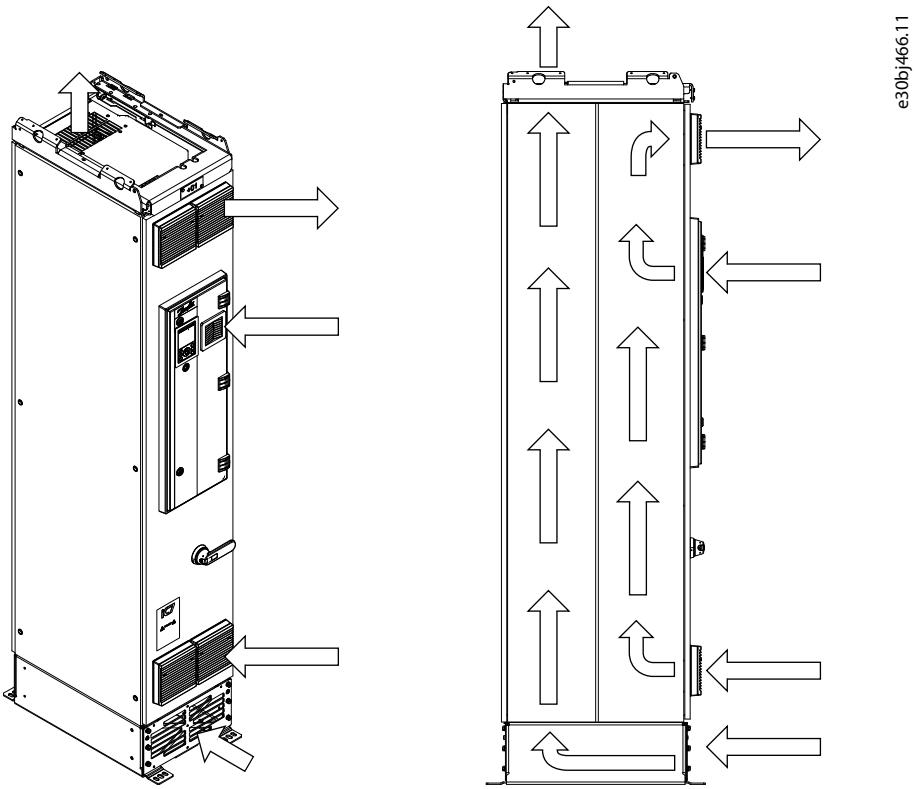

Figure 29: Airflow in Default Cooling of the Enclosed Drives

See the dimensions of the default cooling:

- 9.2.16 Dimensions for Default Cooling, FE9
- 9.2.17 Dimensions for Default Cooling, FE10
- 9.2.18 Dimensions for Default Cooling, AE10, IE10
- 9.2.19 Dimensions for Default Cooling, AE11, IE11
- 9.2.20 Dimensions for Default Cooling, 2 x AE10, 2 x IE10
- 9.2.21 Dimensions for Default Cooling, 2 x AE11, 2 x IE11

5.7.3 Cooling Options

The enclosed drives have 2 cooling options, the back-channel cooling (+OABC) and the cooling air output flange (+OAOF). In the cooling air output flange, the front and rear plates of the plinth are interchangeable, so the air intake can be in the front or at the back.

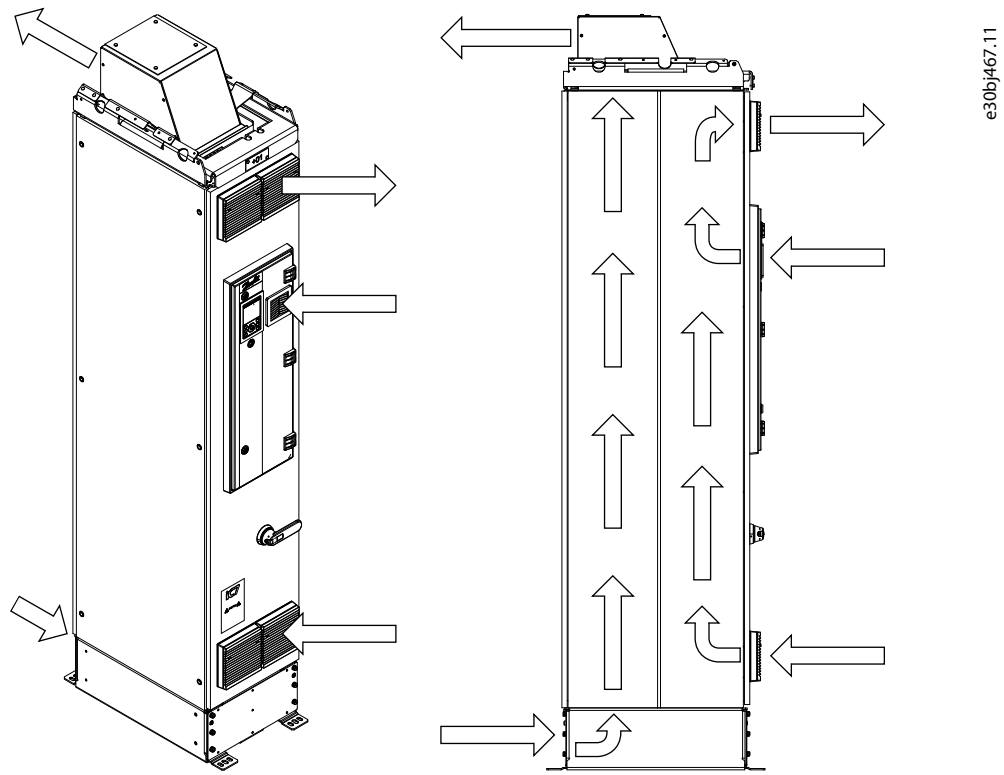

Figure 30: Back-channel Cooling (+OABC), Intake Back, Output Back

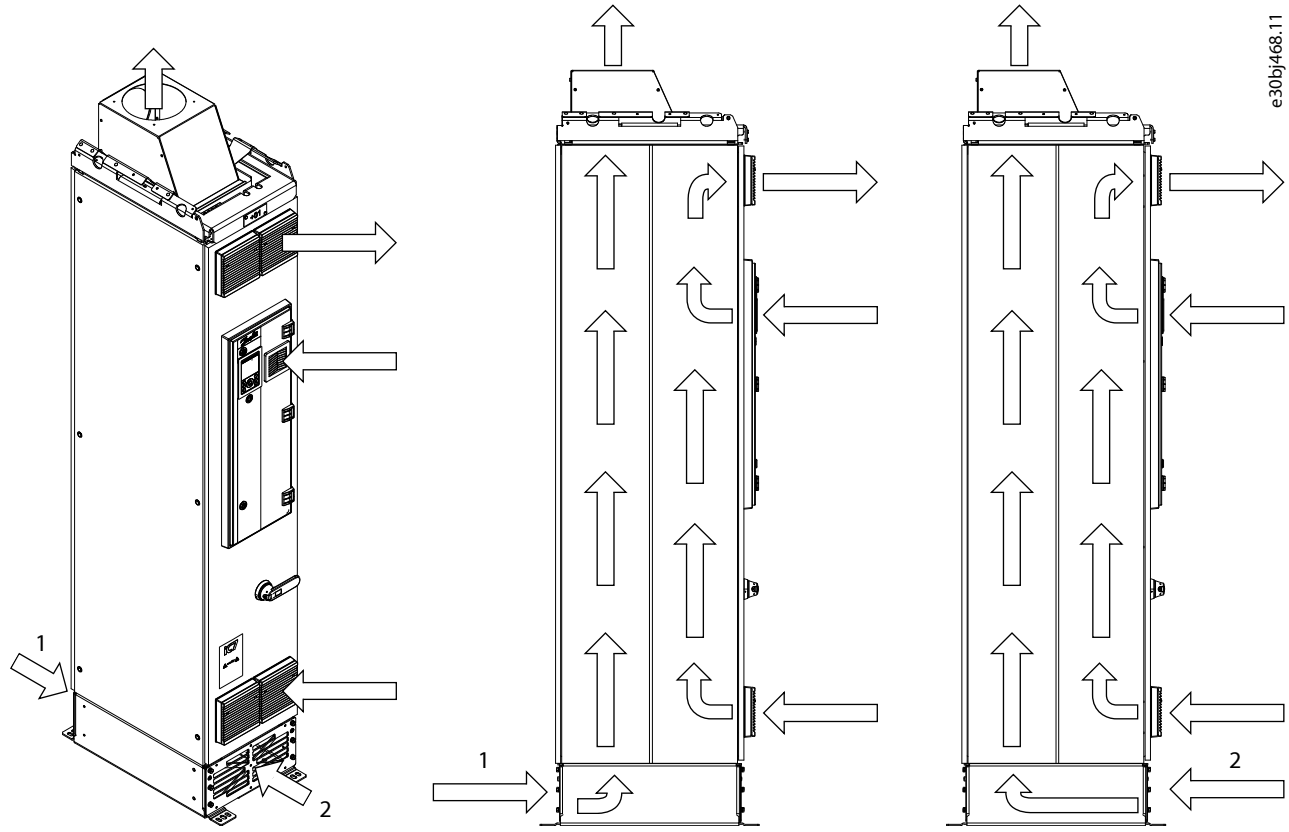

Figure 31: Cooling Air Output Flange (+OAOF), Intake Front or Back, Output Top

1	Air intake at the back	2	Air intake in the front

Danfoss Drives Oy © 2026.06

Table 9: Number of Air Output Holes in the Cooling Air Output Flange

Width of the cabinet [mm (in)]	Number of holes at the top
400 (15.7)	1
600 (23.6)	2
800 (31.5)	3

See the dimensions of the back-channel cooling option:

- 9.2.23 Dimensions for Back-channel Cooling Option, FE9
- 9.2.24 Dimensions for Back-channel Cooling Option, FE10
- 9.2.25 Dimensions for Back-channel Cooling Option, AE10, IE10
- 9.2.26 Dimensions for Back-channel Cooling Option, AE11, IE11
- 9.2.27 Dimensions for Back-channel Cooling Option, 2 x AE10, 2 x IE10
- 9.2.28 Dimensions for Back-channel Cooling Option, 2 x AE11, 2 x IE11

See the dimensions of the cooling air output flange option:

- 9.2.30 Dimensions for the Cooling Air Output Flange Option, FE9
- 9.2.31 Dimensions for the Cooling Air Output Flange Option, FE10
- 9.2.32 Dimensions for the Cooling Air Output Flange Option, AE10, IE10
- 9.2.33 Dimensions for the Cooling Air Output Flange Option, AE11, IE11
- 9.2.34 Dimensions for the Cooling Air Output Flange Option, 2 x AE10, 2 x IE10
- 9.2.35 Dimensions for the Cooling Air Output Flange Option, 2 x AE11, 2 x IE11

5.8 Installing the Back-channel Cooling Option, +OABC

1. Attach the cover plate of the top hood with 4 screws.

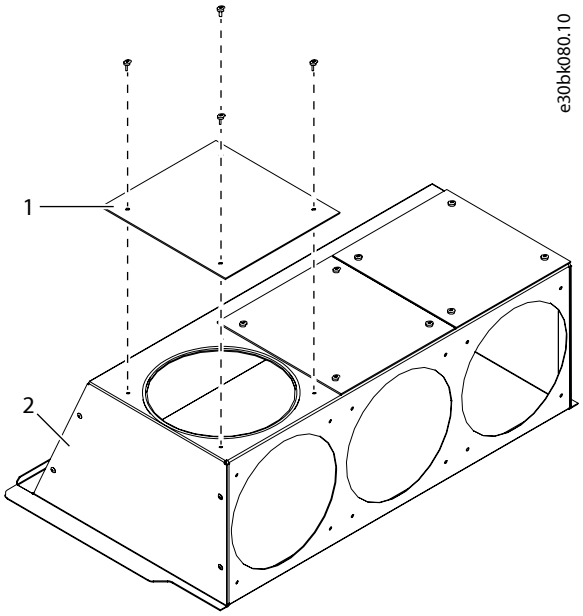

Figure 32: Installing the Back-channel Cooling Option Cover Plate

1	The cover plate	2	The top hood

2. Place the top hood on top of the cabinet.
3. Place the brackets so that they press the sides of the top hood down.
   a. Attach each bracket with 4 screws.

   The brackets are identical, each with 6 mounting holes.

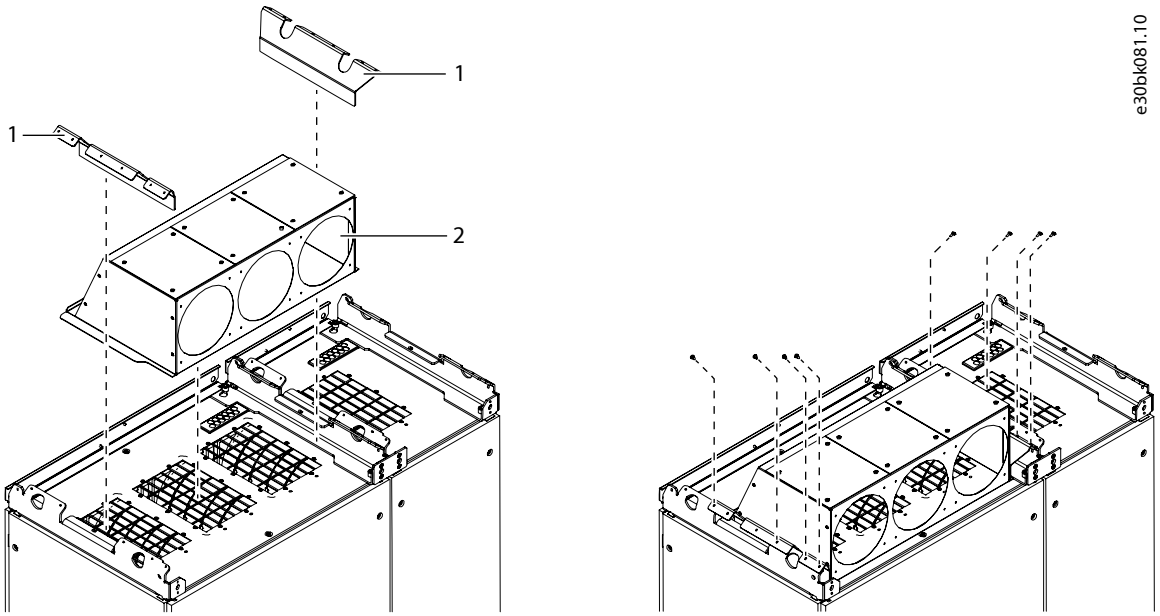

Figure 33: Installing the Back-channel Cooling Option Brackets

1	The brackets	2	The top hood

4. Attach a duct against the top hood to direct the airflow.
5. Adjust the air guide at the bottom.

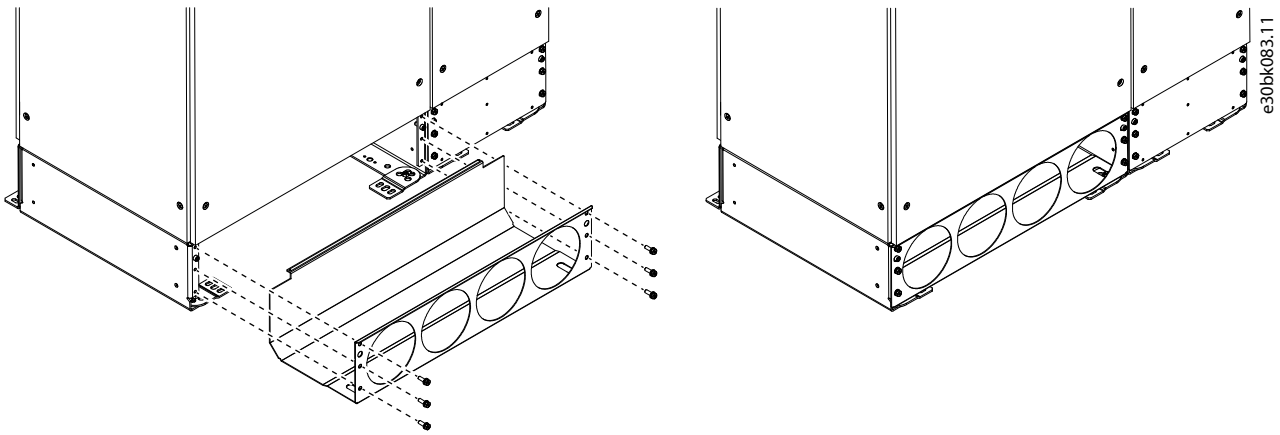

Figure 34: Back-channel Cooling Option Air Guide at the Bottom

5.9 The Marine Construction Option, +AFMC

When the enclosed drives are installed in a marine environment, use the Marine Construction option +AFMC. The option includes components that are installed in several locations in the cabinet section. See the installation guide for more specific installation instructions.

Danfoss Drives Oy © 2026.06

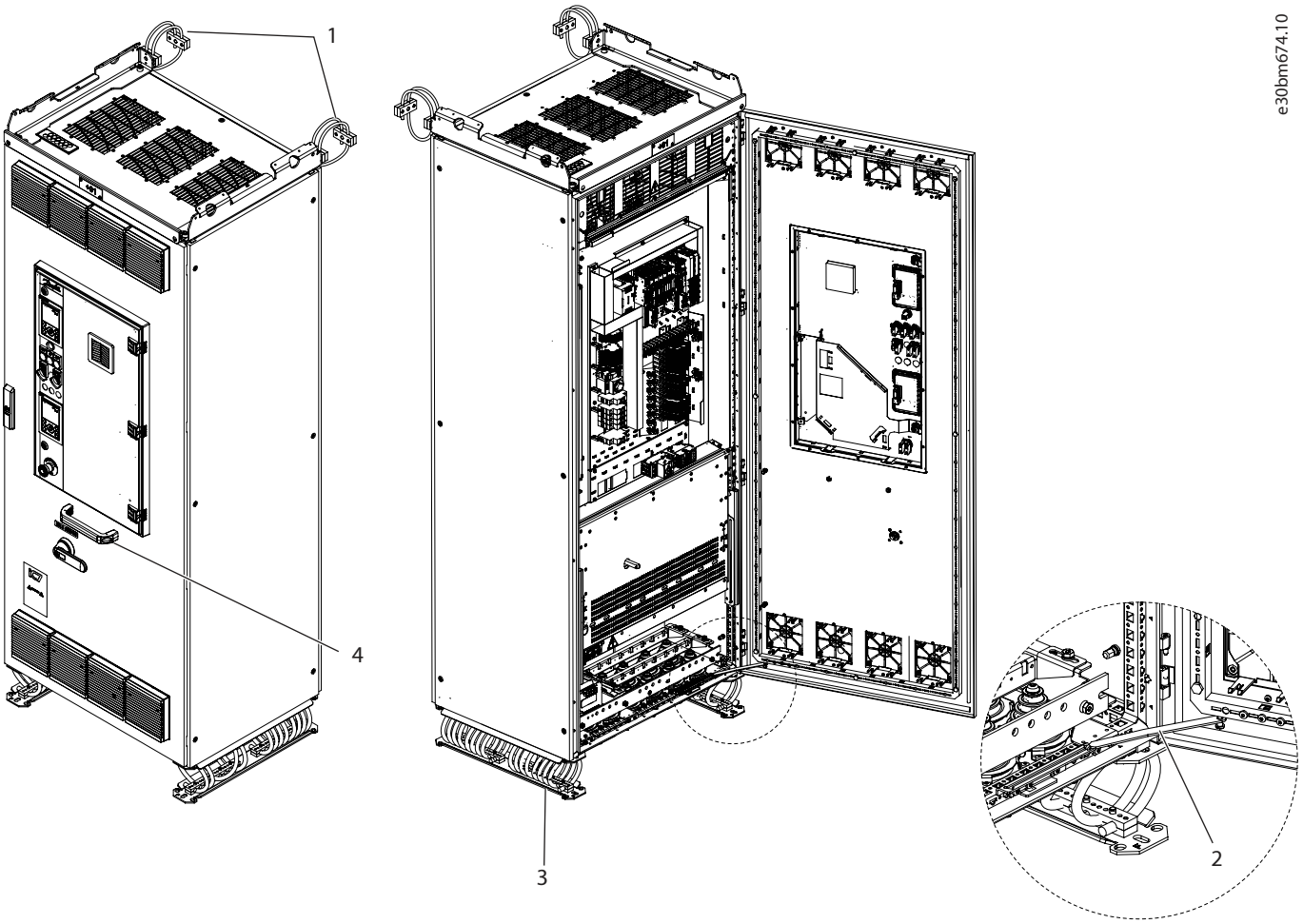

Figure 35: Components of the Marine Construction Option +AFMC

1	Installation loops	2	Door stopper
3	Plinth springs	4	Door handle

6 Electrical Installation

6.1 Fuse Guidelines

The drive system is equipped with fast-acting AC fuses to limit the damages of the drive system. All AC fuses installed within the system must be from the same manufacturer.

See the fuse tables: 9.6.1 Fuse Size Tables.

To ensure fuse performance, make sure that the available supply short-circuit current is sufficient. Check the minimum required values (I_{SC}) at the fuse location.

DC fuses are preinstalled for parallel units in frames AE10, AE11, IE10, and IE11. Do not replace the DC fuses with any other types. All DC fuses installed within the system must be from the same manufacturer.

The product is delivered with fuses from one manufacturer.

NOTICE

FUSES FROM DIFFERENT MANUFACTURERS

Mixing fuses from different manufacturers can damage the equipment.

- Use fuses from only one manufacturer in the system.

6.2 Grounding Principles

Ground the drive in accordance with applicable standards and directives.

According to IEC 60364-5-54; 543.1, unless local wiring regulations state otherwise, the cross-sectional area of the protective grounding conductor must be at least ½ times of the phase conductor and made of the same material when the phase conductor cross-section is above 35 mm^2 (AWG 2).

The connection must be fixed.

⚠ WARNING



ELECTRICAL SHOCK HAZARD - LEAKAGE CURRENT HAZARD

Leakage currents exceed 3.5 mA. Failure to connect the drive properly to protective earth (PE) can result in death or serious injury.

- Ensure reinforced protective earthing conductor according to IEC 60364-5-54 cl. 543.7 or according to local safety regulations for high touch current equipment. The reinforced protective earthing of the drive can be done with:
- a PE conductor with a cross-section of at least 10 mm^2 (8 AWG) Cu or 16 mm^2 (6 AWG) Al.
- an extra PE conductor of the same cross-sectional area as the original PE conductor as specified by IEC 60364-5-54 with a minimum cross-sectional area of 2.5 mm^2 (14 AWG) (mechanically protected) or 4 mm^2 (12 AWG) (not mechanically protected).
- a PE conductor completely enclosed with an enclosure or otherwise protected throughout its length against mechanical damage.
- a PE conductor part of a multi-conductor power cable with a minimum PE conductor cross-section of 2.5 mm^2 (14 AWG) (permanently connected or pluggable by an industrial connector. The multi-conductor power cable shall be installed with an appropriate strain relief).
- NOTE: In IEC/EN 60364-5-54 cl. 543.7 and some application standards (for example IEC/EN 60204-1), the limit for requiring reinforced protective earthing conductor is 10 mA leakage current.

Danfoss Drives Oy © 2026.06

6.3 Cable Requirements

Follow these requirements for the mains and motor cables used in the drive system.

- Select and install mains cables and motor cables according to the local safety regulations, the input voltage, and the load current of the drive.
- Use motor cables rated for +90 °C for IEC, +75 °C (167 °F) for UL. Consider the operating temperature of the mains terminals, and make sure that the mains cables do not overheat near the mains terminals.
- Use symmetrical power cabling with power units connected in parallel. Each power unit must have the same number of cables with an equal cross-section and equal length.

Maximum number of power unit cables and bolts sizes can be found in 9.5.1 General Cable Size Information.

Only use symmetrical and shielded 3-phase motor cables. See Figure 36. Do not use symmetrical and shielded 3-phase cable with individual shield for each phase conductor or single-core phase conductors and PE with or without shield, see Figure 37.

To reach C3 EMC performance, use shielded motor and mains cables.

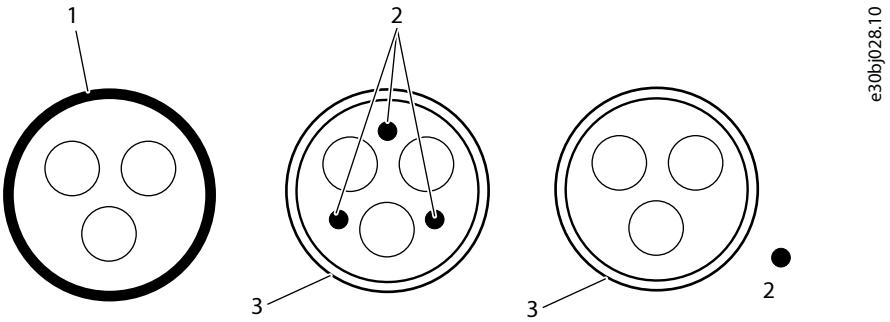

Figure 36: Recommended Cable Types for Mains and Motor Cabling

1	PE conductor and shield	2	PE conductor
3	Shield		

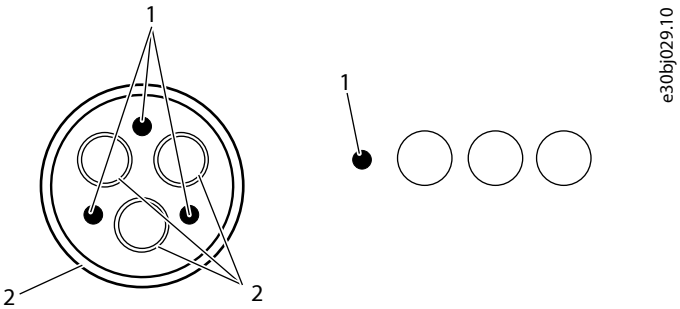

Figure 37: Not Recommended Motor Cable Types

1	PE conductor	2	Shield

6.4 Brake Cable Requirements

The maximum brake cable length is 10 m/33 ft.

Table 10: Brake Cable Requirements

Frame	Cable
FE9	Single-core shielded cable
FE10	3-phase shielded multicore cable. 1st core for BR+, 2nd core for BR-, 3rd core not used.

6.5 Prerequisites for Cable Installation

- Before starting, make sure that none of the components of the drive are live. Read all safety precautions in this guide and other documents available for this product.
- Make sure that the motor cables are sufficiently far from other cables.
- The motor cables must cross other cables at an angle of 90°.
- If possible, do not route the motor cables in long parallel lines with other cables.
- If the motor cables are in parallel with other cables, obey the minimum distances (see Table 11).
- The distances are also valid between the motor cables and the signal cables of other systems.
- The maximum length of shielded motor cables is 150 m (492 ft). If the used motor cables are longer, contact the vendor for more information.
- Check the maximum cable length of the filters.
- Only use symmetrical and shielded motor cables.
- Check the insulation resistance of cables if necessary.

Table 11: Minimum Distances from Motor Cables to Other Cables

Distance to other cables [m (ft)]	Length of the shielded cable [m (ft)]
0.3 (1.0)	≤ 50 (164)
1.0 (3.3)	≤ 150 (492)

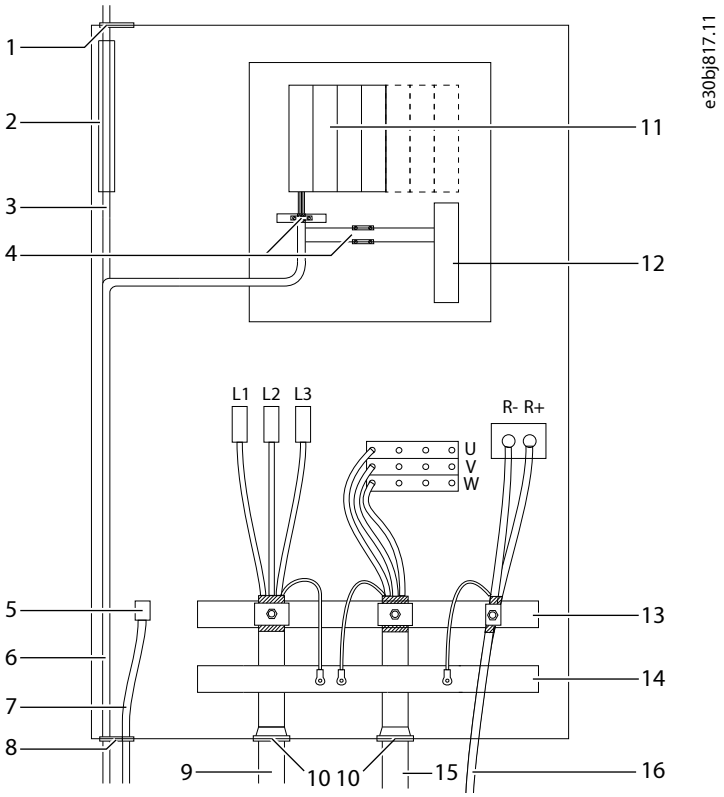

Figure 38: Cabling Principle

1	Control cable grommet	2	Cable installation tubes, 2 pcs, diameter 32 mm (1.3 in)
3	Control cables from the top	4	Strain relief and cable grounding
5	Auxiliary power terminals	6	Control cables from the bottom

Danfoss Drives Oy © 2026.06

7	Auxiliary power cable	8	Control cable grommet
9	Mains cable	10	Grommets
11	Control board and option boards	12	Terminal blocks
13	Strain relief and 360° grounding	14	PE busbar
15	Motor cable	16	Brake cable

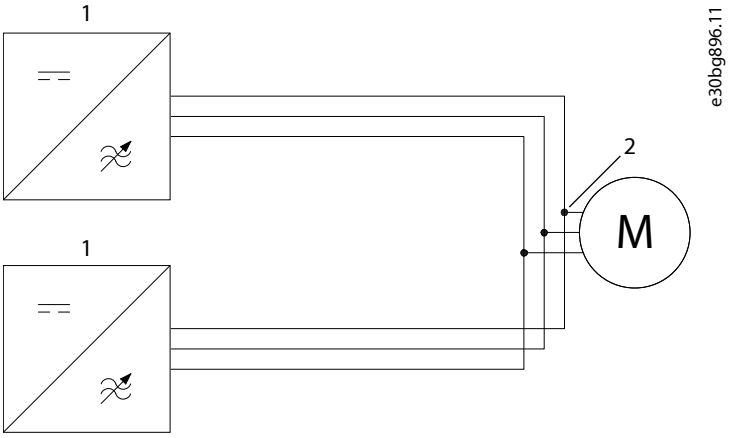

Figure 39: Recommended Installation

1	Inverter module	2	Common coupling point at the motor terminals

If the drives are connected in parallel without output filters or only with a common-mode filter, the recommended common coupling point of motor cables is at the motor terminals.

6.6 Installing Power Cables

6.6.1 Installing the Power Cables through the Bottom

⚠ DANGER



ELECTRIC SHOCK

There are live components behind the touch protections. Lack of touch protections can cause death or serious injury.

- After power cabling, reinstall all touch protections at their original places.

IMPORTANT: This instruction applies for IEC installations.

1. Lift the service table all the way up until it is locked.
2. Strip the mains and motor cables.
3. Make openings for the cables on the bottom of the cabinet.

To keep the protection rating IP54:

- Do not cut too many openings.
- Do not cut too large openings.
- Install a grommet in every opening.

- The grommets must be suited to the output diameter of the cable. The cable diameter is 25–65 mm (1–2.6 in).

4. Lead the power cables through the grommet holders.
5. Peel the cable shield and attach the end to the PE busbar.
6. Use cable clamps to fix the cables.

Cable clamps are not included in the delivery. Use a Sormat KP or Meka CCA series cable clamp, or an equivalent full-metal cable clamp.

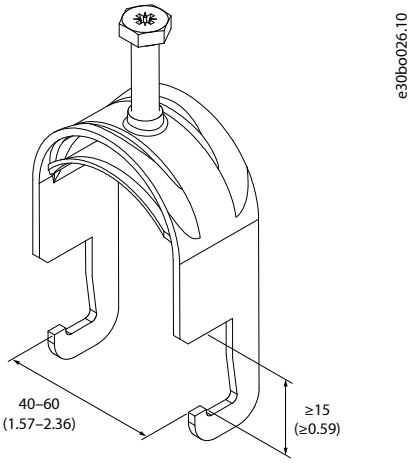

Figure 40: Measurements of a Suitable Cable Clamp

7. To make a 360° connection, expose the shield of the cables. Use a cable tie to attach the knitted metal mesh tube.

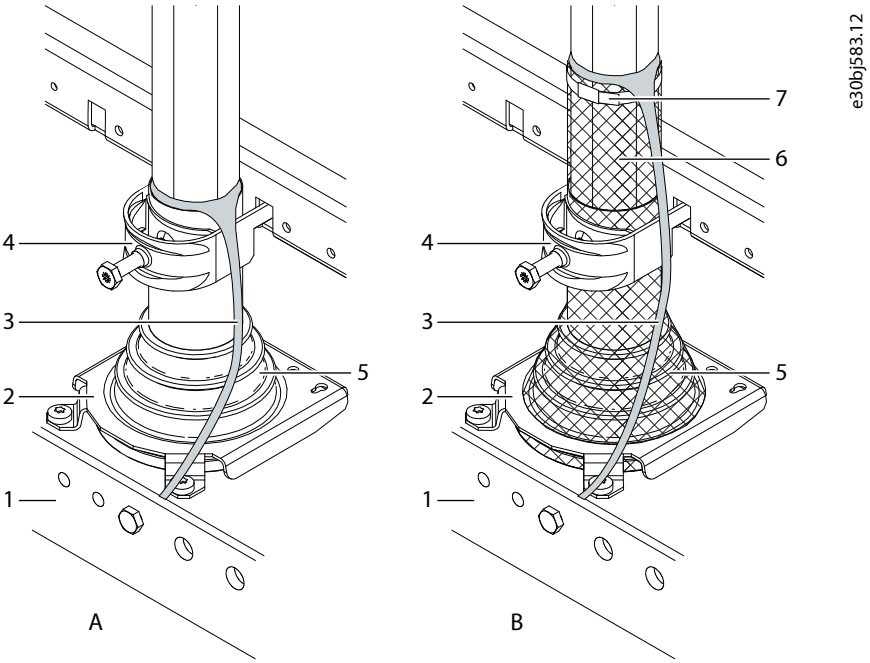

Figure 41: Cabling Methods (IEC)

1	PE busbar	2	Grommet holder
3	Cable shield	4	Cable clamp
5	Grommet	6	Knitted metal mesh tube

Danfoss Drives Oy © 2026.06

7	Cable tie	A	IP54
B	EMC 360° (IP54 and knitted metal mesh tube)		

8. Connect the mains cables to the terminals L1, L2, and L3, and the motor cables to the terminals U, V, and W.

   - The accessories for the mains cables: accessories bag 1 (172F8358)
   - The accessories for the motor cables: accessories bag 2 (172K5228)

   See the correct tightening torques in 9.1 Tightening Torques.

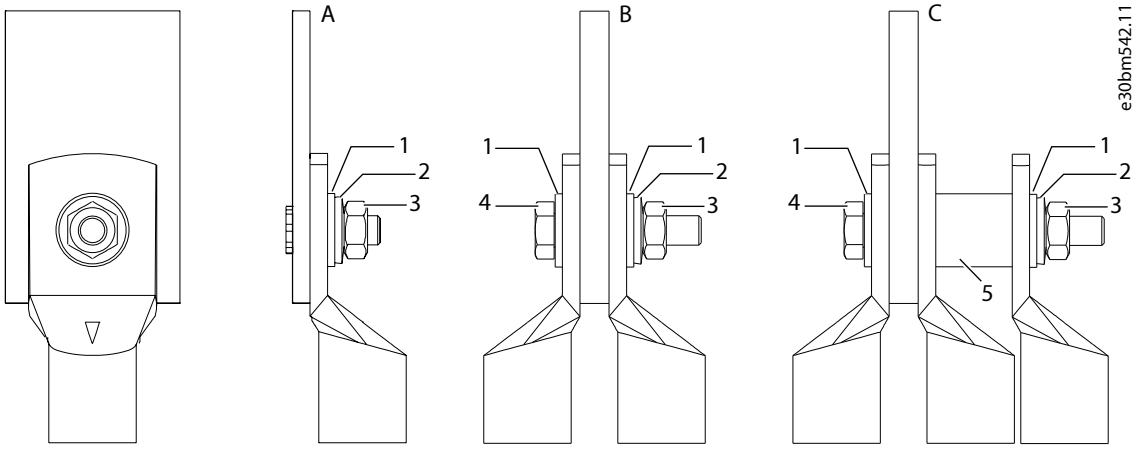

Figure 42: Connecting the Power Cables to the Terminals

A	One power cable: inverter power terminals	B	Two power cables: other power terminals
C	Three power cables	1	Plain washer
2	Spring washer	3	Nut
4	Bolt	5	Copper cable lug spacer

9. Connect the grounding conductors to the PE busbar.

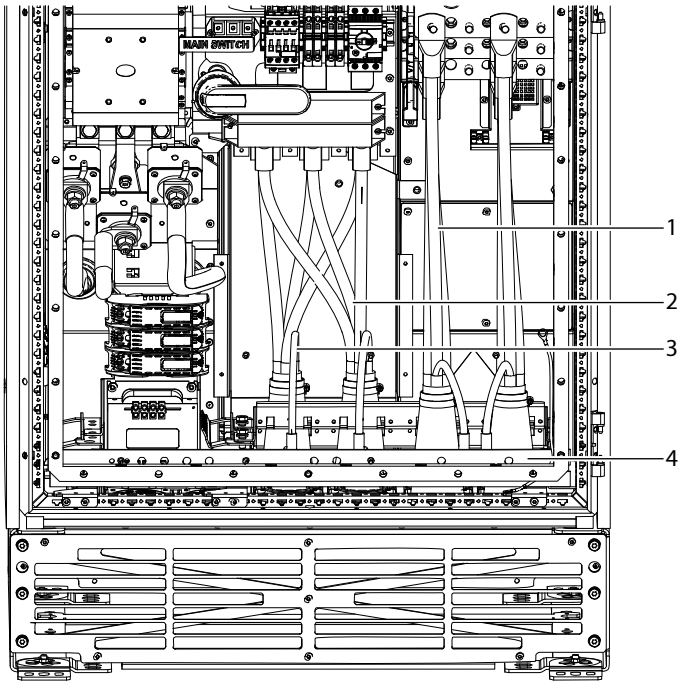

Figure 43: Cabling of the Enclosed Drive

1	Motor cables	2	Mains cables
3	Grounding conductor	4	PE busbar

10. Release and lower the service table.

6.6.2 Installing the Power Cables through the Top (+KCIT or +KDOT)

Use these instructions with the options Top-entry +KCIT and +KDOT.

DANGER



ELECTRIC SHOCK

There are live components behind the touch protections. Lack of touch protections can cause death or serious injury.

- After power cabling, reinstall all touch protections at their original places.

IMPORTANT: This instruction applies for IEC installations.

1. Strip the mains and motor cables.
2. Make openings for the cables in the grommets at the top of the cabinet.

   To keep the protection rating IP54:

   - Do not cut too many openings.
   - Do not cut too large openings.
   - Install a grommet in every opening.
   - The grommets must be suited to the output diameter of the cable. The cable diameter is 25–65 mm (1–2.6 in).
3. Lead the power cables through the grommet holders.

Danfoss Drives Oy © 2026.06

4. Peel the cable shield and attach the end to the PE busbar.
5. Use cable clamps to fix the cables.

   Cable clamps are not included in the delivery. Use a Sormat KP or Meka CCA series cable clamp, or an equivalent full-metal cable clamp.

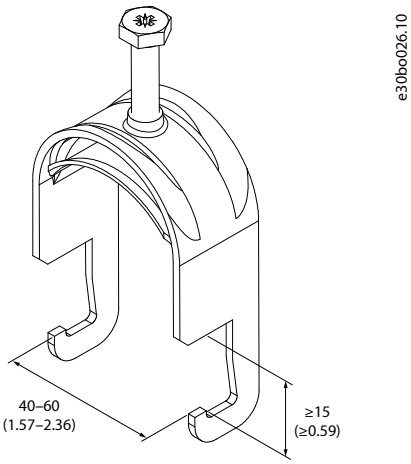

Figure 44: Measurements of a Suitable Cable Clamp

6. To make a 360° connection, expose the shield of the cables. Use a cable tie to attach the knitted metal mesh tube.

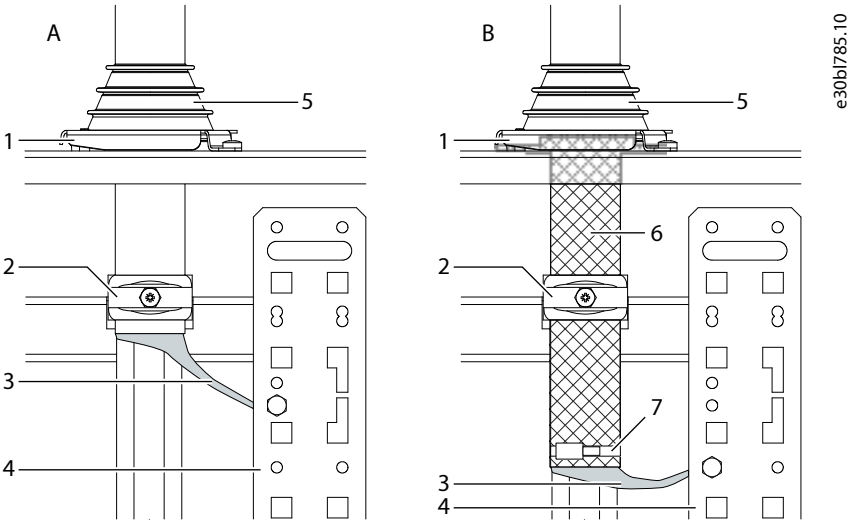

Figure 45: Cabling Methods (IEC)

1	Grommet holder	2	Cable clamp
3	Cable shield	4	PE busbar
5	Grommet	6	Knitted metal mesh tube
7	Cable tie	A	IP54
B	EMC 360° (IP54 and knitted metal mesh tube)		

7. Connect the mains cables to the terminals L1, L2, and L3, and the motor cables to the terminals U, V, and W.

   See the correct tightening torques in 9.1 Tightening Torques.

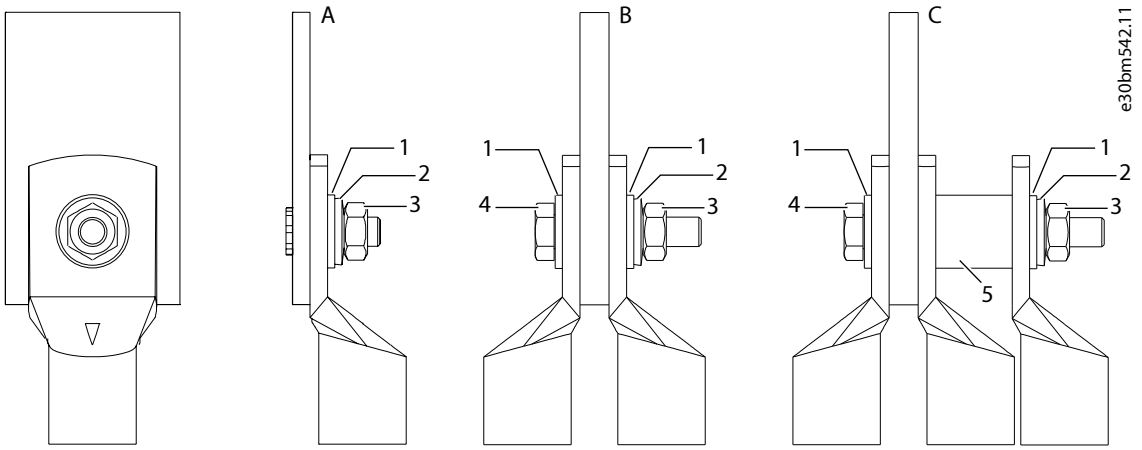

Figure 46: Connecting the Power Cables to the Terminals

A	Inverter power terminals	B	Other power terminals
C	Terminals with 3 power cables	1	Plain washer
2	Spring washer	3	Nut
4	Bolt	5	Copper cable lug spacer

8. Connect the grounding conductors to the PE busbar.

6.6.3 Installing the Power Cables through the Bottom, Gland Plate +KFCP

DANGER



ELECTRIC SHOCK

There are live components behind the touch protections. Lack of touch protections can cause death or serious injury.

- After power cabling, reinstall all touch protections at their original places.

IMPORTANT: This instruction applies for UL installations. The UL variant of the enclosed drive includes a gland plate (+KFCP) for free cutting of the cable entry holes.

1. Lift the service table all the way up until it is locked.
2. Strip the mains and motor cables.
3. Remove the M8 screws of the cable supports. Remove the cable supports.

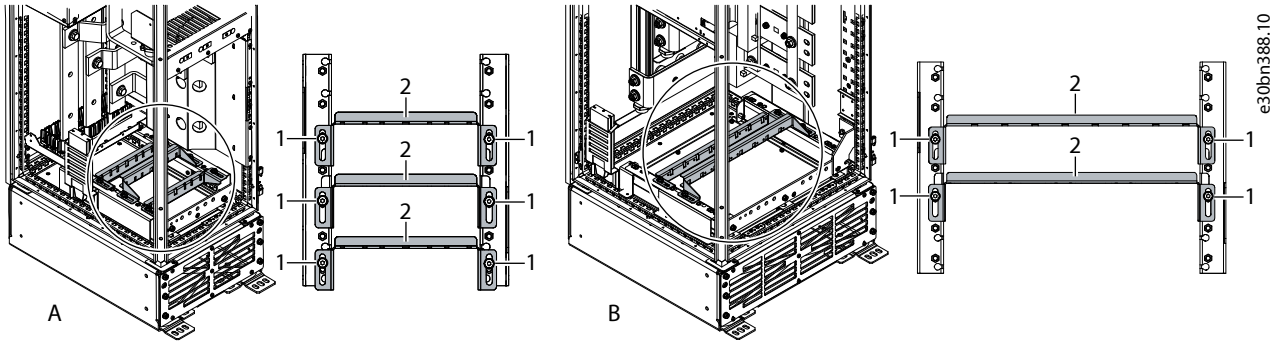

Figure 47: Removing the Cable Supports

Danfoss Drives Oy © 2026.06

1	Screws	2	Cable supports
A	400 mm wide module cabinet section	B	600 mm wide module cabinet section

4. Remove the M5 screws and then the gland plate from the bottom of the cabinet section.

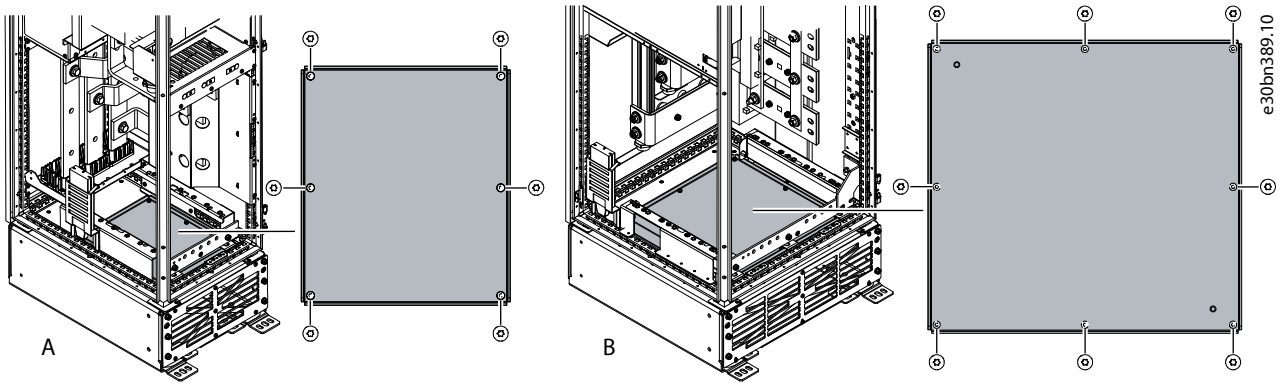

Figure 48: Removing the Gland Plate from the Bottom of the Module Cabinet Section

A	400 mm wide module cabinet section	B	600 mm wide module cabinet section

5. Make openings for the cables on the gland plate.

To keep the protection rating IP54:

- Do not cut too many openings.
- Do not cut too large openings.
- Install a grommet in every opening.
- The grommets must be suited to the output diameter of the cable. The cable diameter is 25–65 mm (1–2.6 in).

6. Reinstall the gland plate.
7. Reinstall the cable supports.
8. Lead the power cables through the grommet holders.
9. Peel the cable shield and attach the end to the PE busbar.
10. Use cable clamps to fix the cables.

Cable clamps are not included in the delivery. Use a Sormat KP or Meka CCA series cable clamp, or an equivalent full-metal cable clamp.

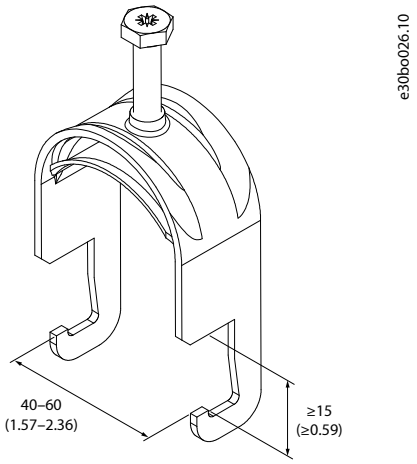

Figure 49: Measurements of a Suitable Cable Clamp

11. To make a 360° connection, expose the shield of the cables. Use a cable tie to attach the knitted metal mesh tube.

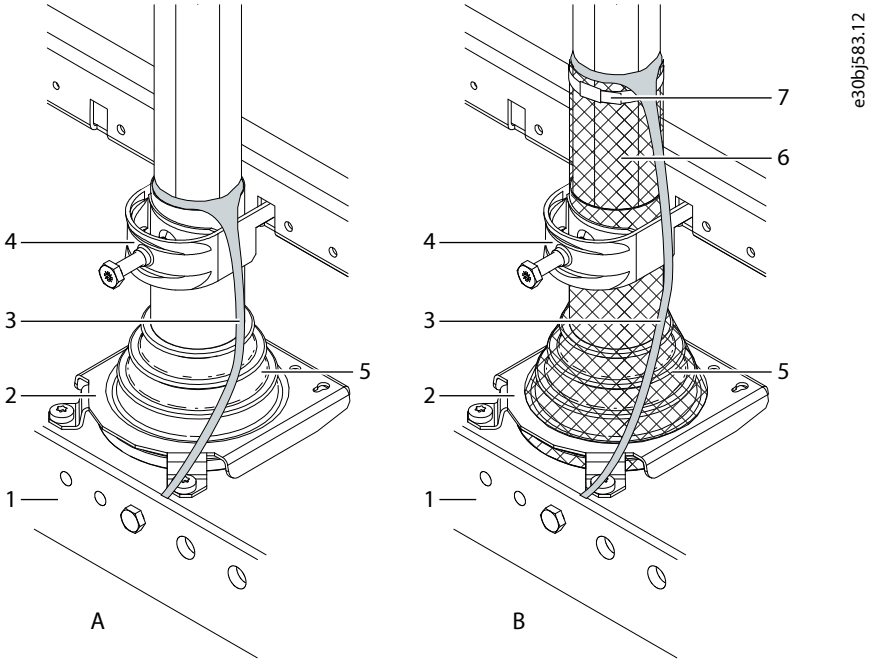

Figure 50: Cabling Methods (IEC)

1	PE busbar	2	Grommet holder
3	Cable shield	4	Cable clamp
5	Grommet	6	Knitted metal mesh tube
7	Cable tie	A	IP54
B	EMC 360° (IP54 and knitted metal mesh tube)		

12. Connect the mains cables to the terminals L1, L2, and L3, and the motor cables to the terminals U, V, and W.

- The accessories for the mains cables: accessories bag 1 (172F8358)
- The accessories for the motor cables: accessories bag 2 (172K5228)

See the correct tightening torques in 9.1 Tightening Torques.

Danfoss Drives Oy © 2026.06

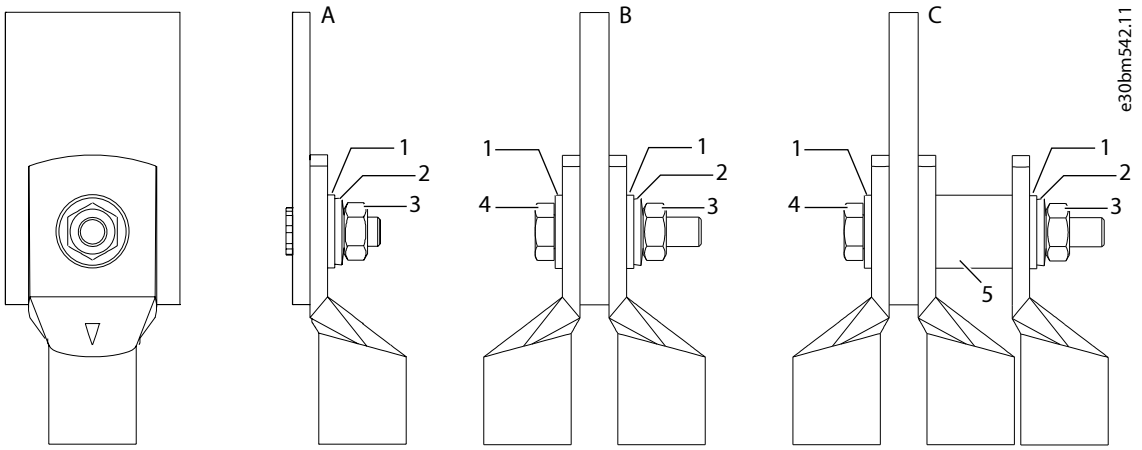

Figure 51: Connecting the Power Cables to the Terminals

A	One power cable: inverter power terminals	B	Two power cables: other power terminals
C	Three power cables	1	Plain washer
2	Spring washer	3	Nut
4	Bolt	5	Copper cable lug spacer

13. Connect the grounding conductors to the PE busbar.

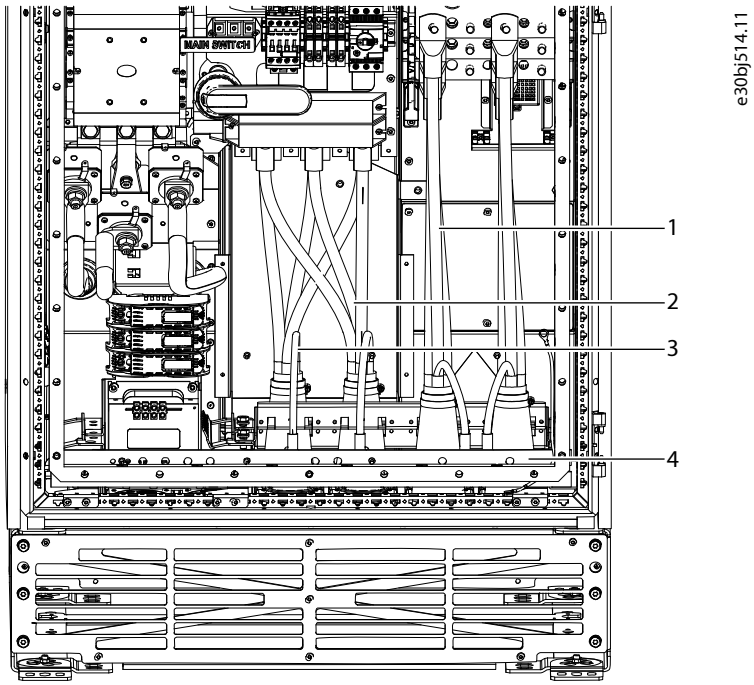

Figure 52: Cabling of the Enclosed Drive

1	Motor cables	2	Mains cables
3	Grounding conductor	4	PE busbar

14. Release and lower the service table.

6.6.4 Installing the Power Cables through the Top, Gland Plate +KFCP

Use these instructions with the options Top-entry +KCIT and +KDOT.

DANGER

ELECTRIC SHOCK

There are live components behind the touch protections. Lack of touch protections can cause death or serious injury.

- After power cabling, reinstall all touch protections at their original places.

IMPORTANT: This instruction applies for UL installations. The UL variant of the enclosed drive includes a gland plate (+KFCP) for free cutting of the cable entry holes.

1. Strip the mains and motor cables.
2. Remove the M5 screws of the gland plate.

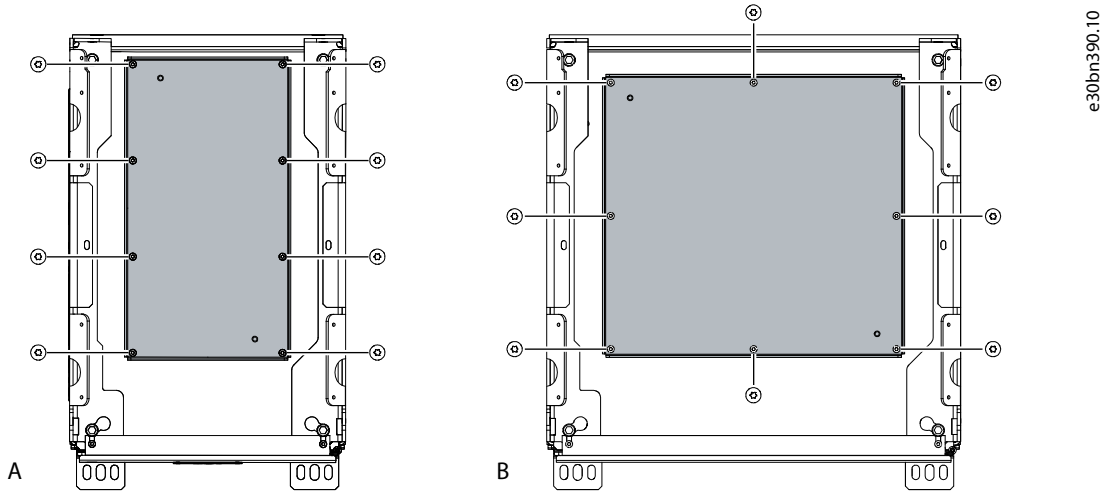

Figure 53: Releasing the Gland Plate from the Roof of the Module Cabinet Section

A	400 mm wide module cabinet section	B	600 mm wide module cabinet section

3. Open the gland plate. Remove the M6 nut to release the grounding wire.

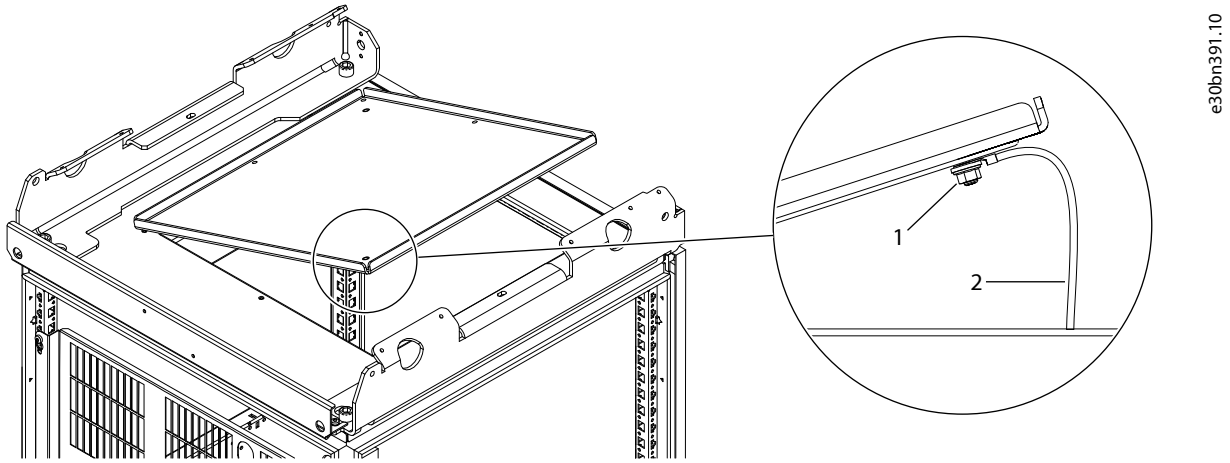

Figure 54: Opening the Gland Plate and Releasing the Grounding Wire

1	Nut	2	Grounding wire

4. Remove the gland plate.

Danfoss Drives Oy © 2026.06

5. Make openings for the cables on the gland plate.

   To keep the protection rating IP54:

   - Do not cut too many openings.
   - Do not cut too large openings.
   - Install a grommet in every opening.
   - The grommets must be suited to the output diameter of the cable. The cable diameter is 25–65 mm (1–2.6 in).

6. Reattach the grounding wire.
7. Reinstall the gland plate.
8. Lead the power cables through the grommet holders.
9. Peel the cable shield and attach the end to the PE busbar.
10. Use cable clamps to fix the cables.

    Cable clamps are not included in the delivery. Use a Sormat KP or Meka CCA series cable clamp, or an equivalent full-metal cable clamp.

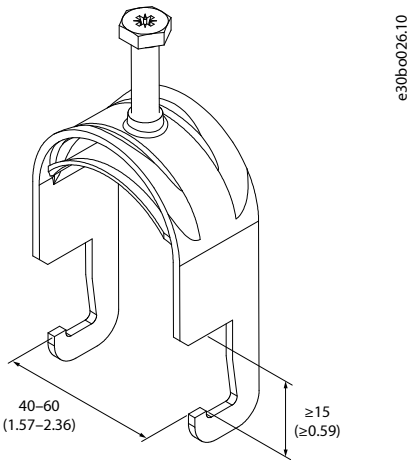

Figure 55: Measurements of a Suitable Cable Clamp

11. To make a 360° connection, expose the shield of the cables. Use a cable tie to attach the knitted metal mesh tube.

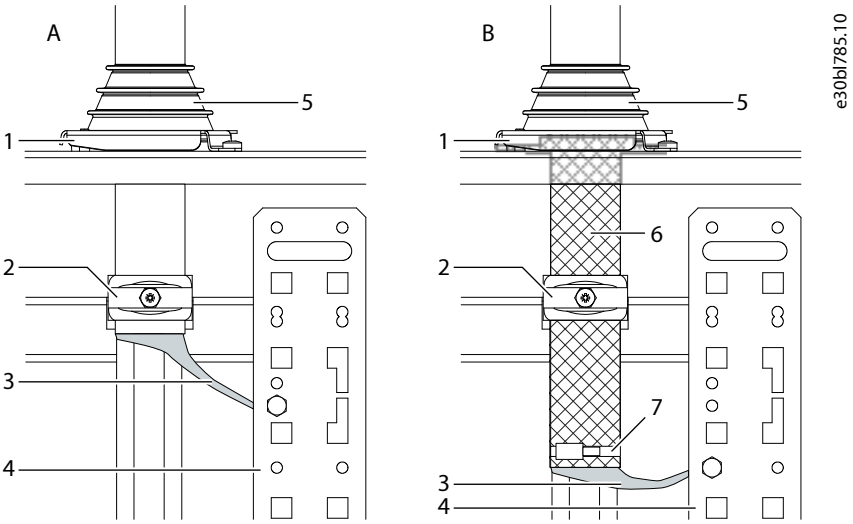

Figure 56: Cabling Methods (IEC)

1	Grommet holder	2	Cable clamp
3	Cable shield	4	PE busbar
5	Grommet	6	Knitted metal mesh tube
7	Cable tie	A	IP54
B	EMC 360° (IP54 and knitted metal mesh tube)		

12. Connect the mains cables to the terminals L1, L2, and L3, and the motor cables to the terminals U, V, and W.

See the correct tightening torques in 9.1 Tightening Torques.

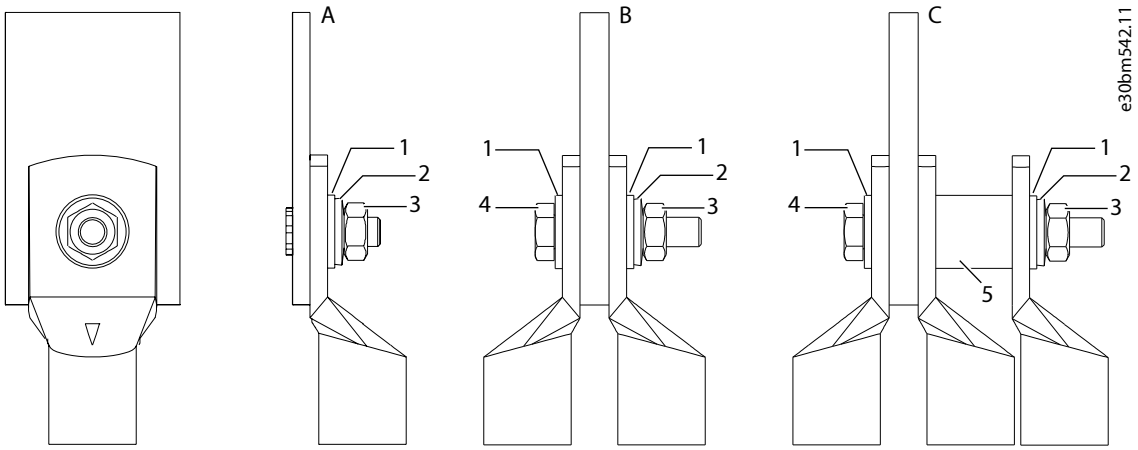

Figure 57: Connecting the Power Cables to the Terminals

A	Inverter power terminals	B	Other power terminals
C	Terminals with 3 power cables	1	Plain washer
2	Spring washer	3	Nut
4	Bolt	5	Copper cable lug spacer

13. Connect the grounding conductors to the PE busbar.

6.6.5 Installing the Power Cables in the Inverter Module Cabinet, Gland Plate +KFCP

The UL variant of the enclosed drive includes a gland plate (+KFCP) for free cutting of the cable entry holes.

Some grounding wires are connected to the PE busbar. Reconnect these grounding wires after installation.

1. Remove the PE busbar.

Danfoss Drives Oy © 2026.06

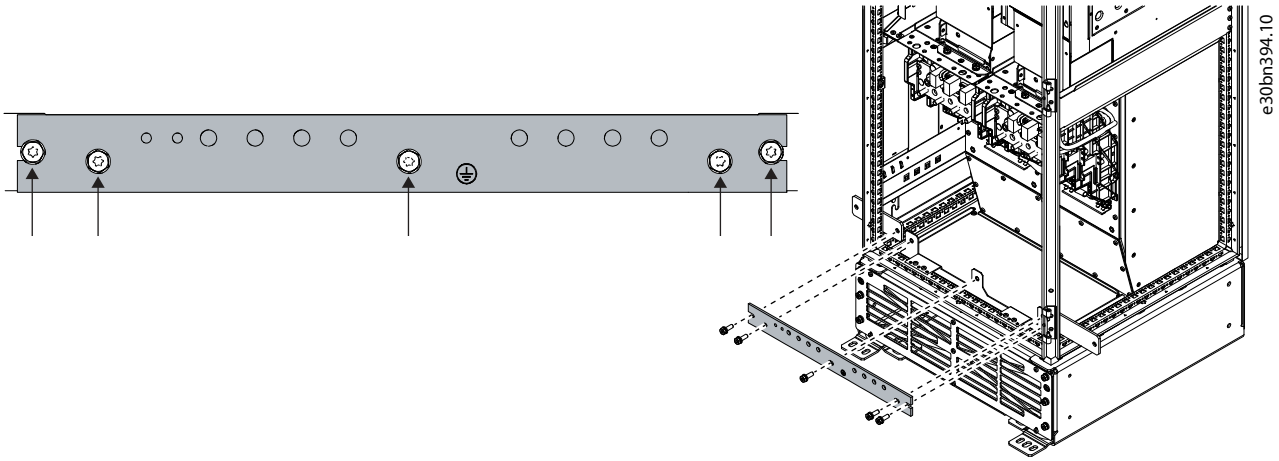

Figure 58: Removing the PE Busbar

2. Remove the gland plate from the bottom of the cabinet.

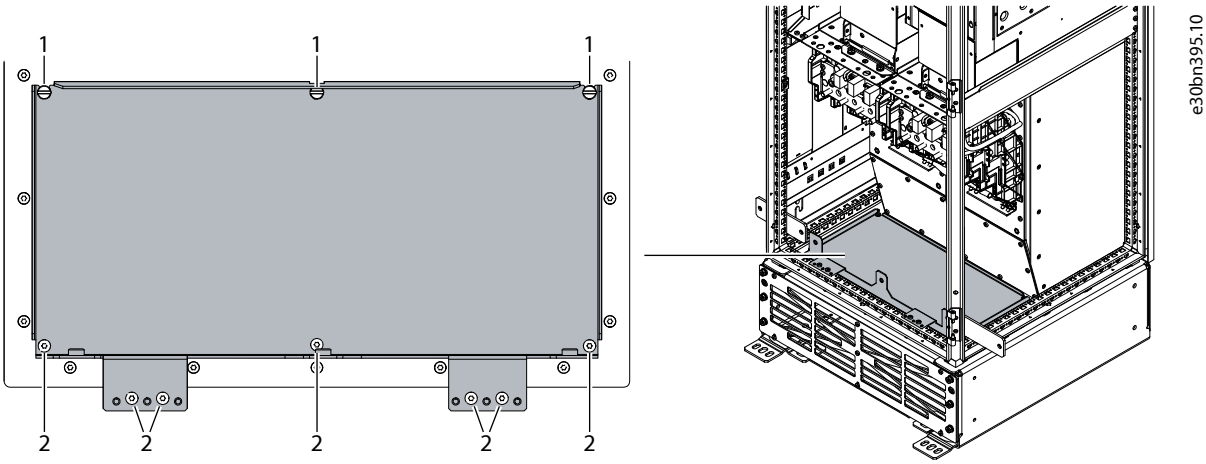

Figure 59: Removing the Gland Plate from the Bottom of the Inverter Cabinet

1	Screws to be loosened	2	Screws to be removed

3. Continue cabling as in 6.6.3 Installing the Power Cables through the Bottom, Gland Plate +KFCP.

6.7 Installing the Brake Cables, FE9, FE10

1. Strip the brake cables.
2. To make a 360° connection, expose the shield of the cables.
3. Peel the cable shield and attach the end to the PE busbar.
4. Use cable clamps to fix the cables.
5. Find the brake terminals in the system module inside the cabinet. Connect the brake cables to the brake terminals.

Use M10 bolts.

Use the tightening torque 19 Nm (168 in-lb).

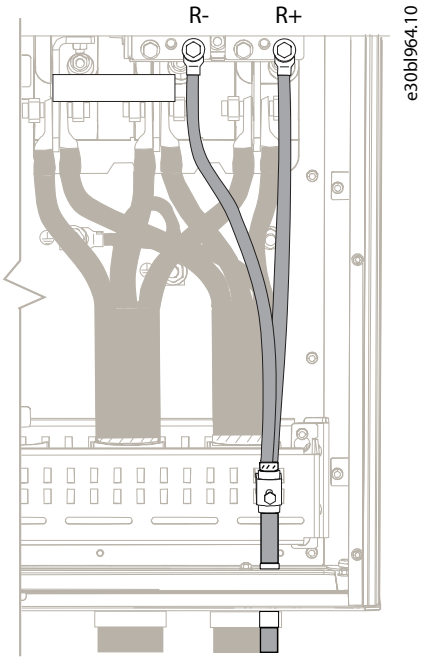

Figure 60: Installing the Brake Cables in the Enclosed Drive, FE9, FE10

6.8 Parameter Settings for IT Mains

If the drive is supplied from an isolated mains (IT mains, floating delta, or grounded delta) or TT/TN-S mains with grounded leg, it is recommended to check the parameter settings of the grid type and RFI. The filter capacitors between the chassis and the DC link should be cut off via the parameters to avoid damage to the DC link and to reduce the ground capacity currents.

See more information in the *iC7 Series Industry Application Guide*.

Keep the filter capacitors between the chassis and the DC link in these cases:

- When optimal EMC performance is needed.
- When parallel motors are used.
- When the motor cable is longer than 25 m (82 ft).

It is important to use isolation monitors that are rated for use together with power electronics.

6.9 Disconnecting the dU/dt Filter Capacitors

To measure the insulation resistance of the motor cable, disconnect the dU/dt filter capacitors of AE10, AE11, IE10, and IE11 from the main circuit.

1. Move the terminal including its wires from the left side to the right side.

   The terminal is on the U phase.

   The dU/dt filter capacitors are now disconnected from the main circuit.

Danfoss Drives Oy © 2026.06

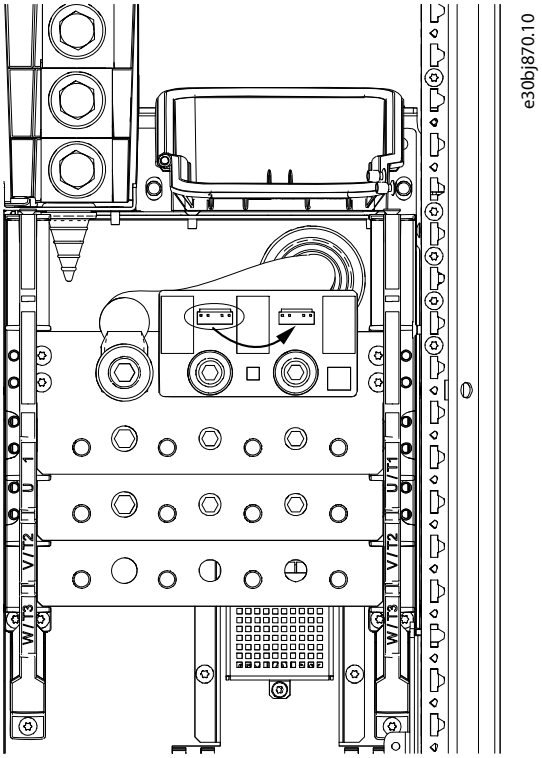
e30bj870.10
U/T1
V/T2
W/T3
U/T1
V/T2
W/T3

7 Control and Option Installation

7.1 General Information of the Control Compartment

The enclosed drive has a door-mounted control compartment for the control terminals, separated from the cabinet section. The control compartment is accessed through a separate door on the cabinet door.

Make sure that the control cables are long enough. This prevents tight bends in the cables between the control compartment and the frame of the drive and ensures that the control compartment can be fully opened during module maintenance.

The 2 first I/O option boards are wired into the terminal blocks on the control compartment, and the next ones directly into the option board terminals. The wiring of the boards:

- I/O and Relay Option OC7C1 as standard I/O: on the terminal block on the control compartment
- Relay Option OC7R0: on the terminal block on the control compartment
- General Purpose I/O OC7C0: on the terminal block on the control compartment
- I/O and Relay Option OC7C1 as an option: on the option board

7.2 Control Compartment Door Elements

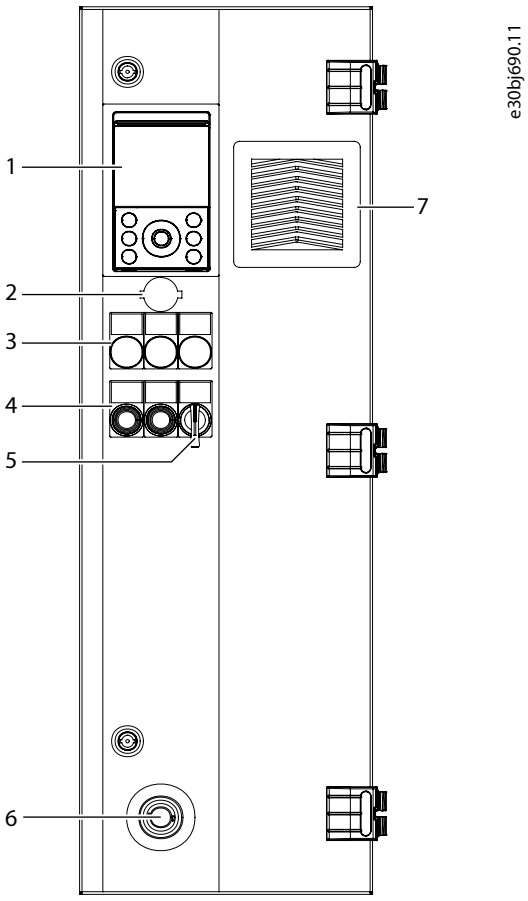

Figure 61: Control Compartment Door Elements, FE9, FE10

1	Control panel, -PGA	2	Ethernet port, RJ45
3	Run, ready, and fault lights (+IICD), -PF3, -PF4, -PF5	4	Mains contactor push button Open/Close, -SF7.1, -SF7.2
5	Mains contactor Local/Remote switch, -SF6	6	Emergency stop button (+ILSS), -SFG
7	Filter cover and optional IP54 filter (+IP54)		

Danfoss Drives Oy © 2026.06

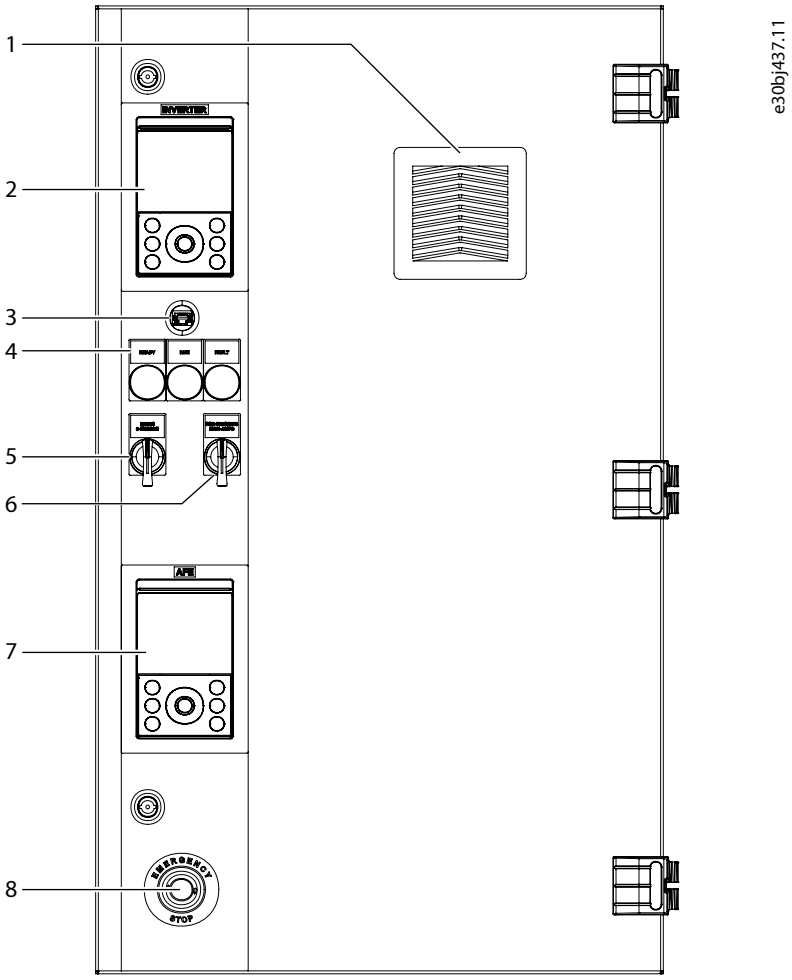

Figure 62: Control Compartment Door Elements, AE10/11, IE10/11

1	Filter cover and optional IP54 filter (+IP54)	2	Control panel (for the inverter module), -PGA
3	Ethernet port (for the inverter module), RJ45	4	Run, ready, and fault lights (+IICD), -PF3, -PF4, -PF5
5	Mains 0–enable switch, -SF11	6	Pre-charging MAN–AUTO switch, -SF12
7	Control panel (for the AFE module), -PGA2	8	Emergency stop button (+ILSS), -SFG

7.3 Control Compartment Internal Elements

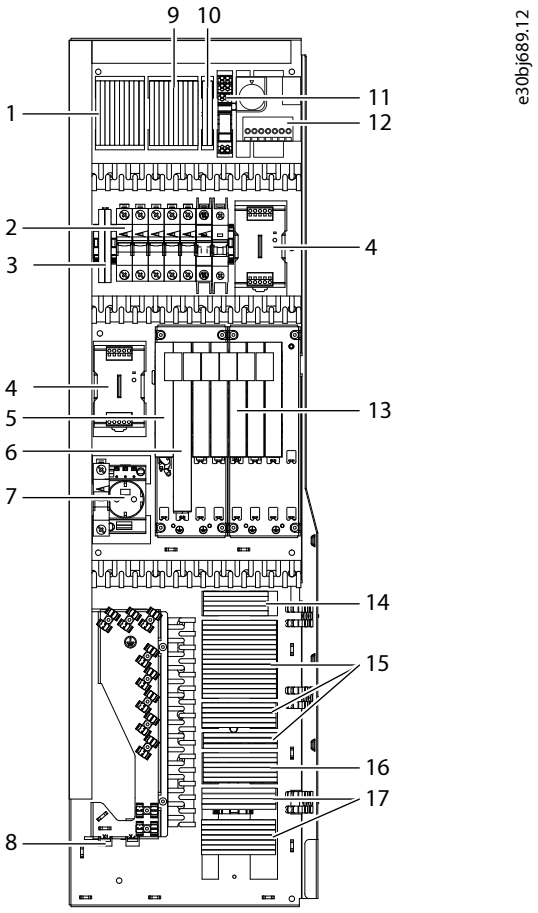

Figure 63: Elements inside the Control Compartment, FE9

1	Mains contactor terminals (+GAC0) -XD0	2	Circuit breakers
3	Grounding terminals, -PE	4	24 V DC power supply (TB7, TB7.1)
5	Option Extender OC7F2	6	I/O and Relay Option OC7C1
7	230 V AC socket (CEE 7/3, +IGS0), or 115 V AC socket (US, +IGS1), or 230 V AC socket (UK, +IGS2), -XD10	8	Ethernet ports for fieldbus X1 and X2
9	Auxiliary AC supply terminals (+IHAS), or auxiliary AC voltage transformer terminals (+IHAT), -XD1	10	Cabinet heater terminals (+IBCH), -XD4
11	Auxiliary relay (+IBCH, +IAMH), -QAM	12	Door fan thermostat, -BT4
13	Option slots	14	24 V DC terminals, -XD3
15	Spring-type terminals, -XD2.1, -XD2.2	16	Door device terminals, -XDJ
17	Terminals for I/O and relay options		

Danfoss Drives Oy © 2026.06

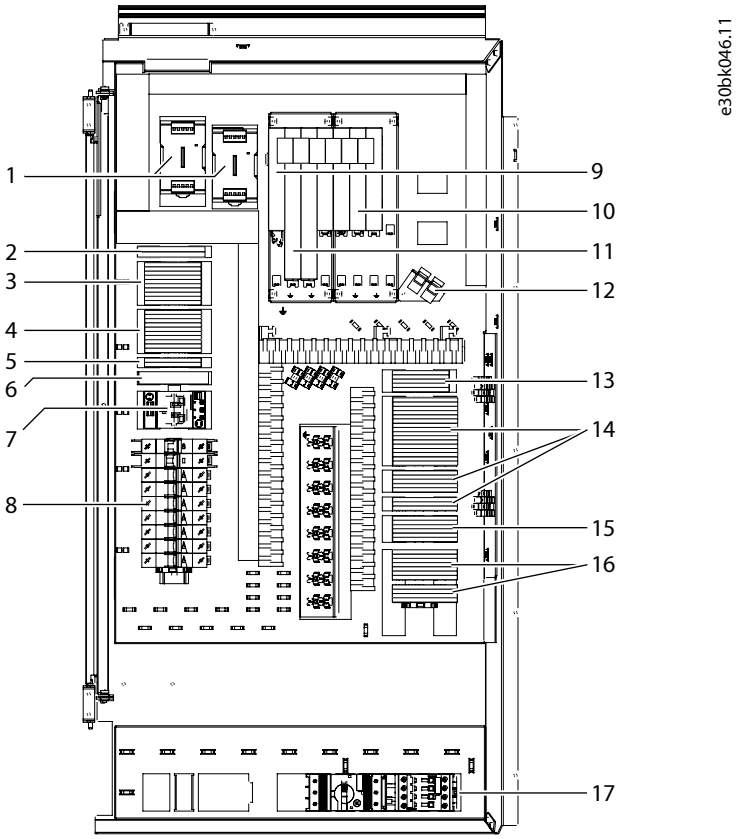

Figure 64: Elements inside the Control Compartment, FE10

1	24 V DC power supply (TB7, TB7.1)	2	Grounding terminals, -PE
3	Mains contactor terminals (+GACO), -XD0	4	Auxiliary AC supply terminals (+IHAS), or auxiliary AC voltage transformer terminals (+IHAT), -XD1
5	Terminals for the cabinet heater option (+IBCH), -XD4	6	Auxiliary relay (+IBCH, +IAMH), -QAM
7	230 V AC socket (CEE 7/3, +IGS0), or 115 V AC socket (US, +IGS1), or 230 V AC socket (UK, +IGS2), -XD10	8	Circuit breakers
9	Option Extender OC7F2	10	Option slots
11	I/O and Relay Option OC7C1	12	Ethernet ports for fieldbus X1 and X2
13	24 V DC terminals, -XD3	14	Spring-type terminals, -XD2.1, -XD2.2
15	Door device terminals, -XDJ	16	Terminals for I/O and relay options
17	Motor fan control/supply terminals (+ICF1...+ICF4), -FCK, -QA9		

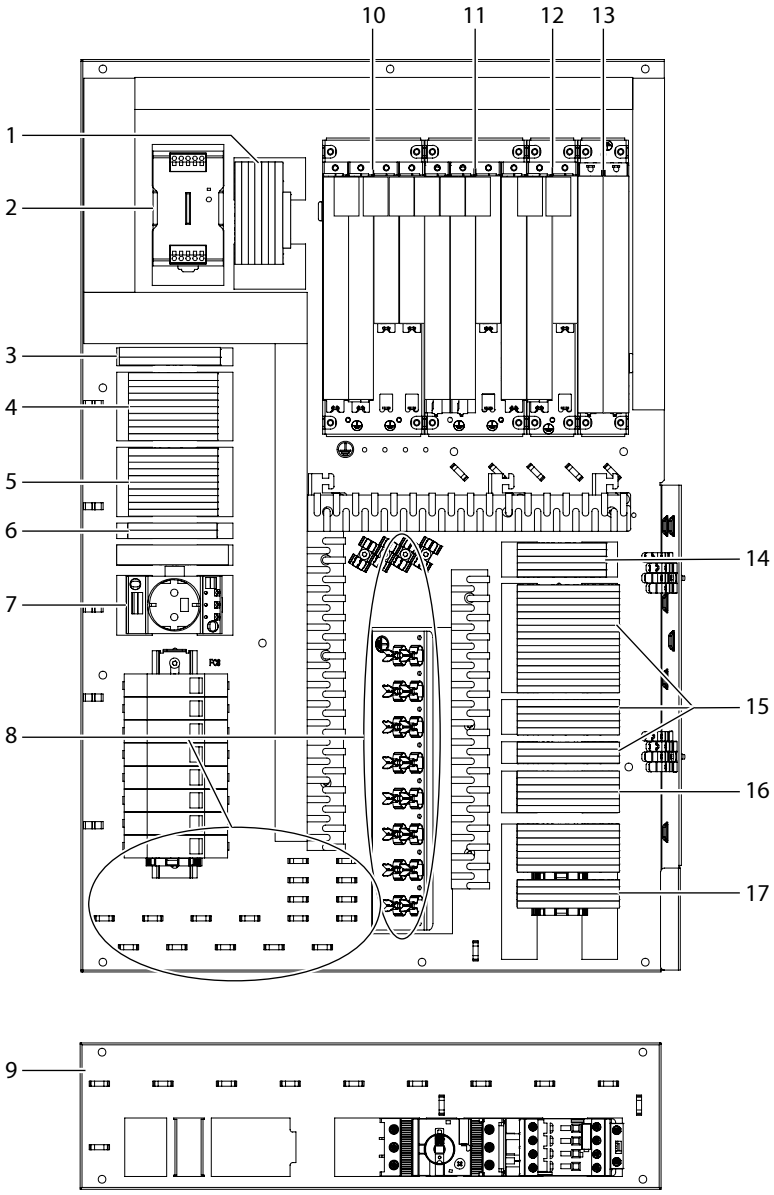

Figure 65: Elements inside the Control Compartment, AE10/11, IE10/11

1	AFE terminals, -XD12.1	2	24 V DC power supply (+IFCS), -TB7
3	Grounding terminals, -PE	4	Fixed air circuit breaker terminals (+GACB), or withdrawable air circuit breaker terminals (+GACW), or mains contactor terminals (+GAC0) -XD0
5	Auxiliary AC supply terminals (+IHAS), or auxiliary AC voltage transformer terminals (+IHAT), -XD1	6	Terminals for the cabinet heater option, -XD4
7	230 V AC socket (CEE 7/3, +IGS0), or 115 V AC socket (US, +IGS1), or 230 V AC socket (UK, +IGS2), -XD10	8	Strain relief and EMC grounding
9	Motor fan control/supply terminals (+ICF1...+ICF4), -FCK, -QA9	10	Option slots for the inverter module: AA1 = I/O and Relay Option OC7C1, AA2 = control board, AA3 + AA4 = option boards
11	Option slots for the inverter module: AA5, AA6, AA7 = option boards. Option slot for the AFE module: AB1 = I/O and Relay Option OC7C1.	12	Options slots for the AFE module: AB2 =control board, AB3 = option board

Danfoss Drives Oy © 2026.06

13	Options slot AB4 = star coupler board for AFE, AA8 = star coupler board for inverter	14	24 V DC terminals, -XD3
15	Spring-type terminals, -XD2.1, -XD2.2, -XD2.3	16	Door device terminals, -XDJ
17	Reserved for option terminals, for example, option slot AA3 terminals or insulation monitoring terminals (+IMIF)		

7.4 Control Compartment Connections

Table 12: Control Compartment Connections

Terminal	Function	Connector type
X1	Ethernet port	RJ45
X2	Ethernet port	RJ45
X0	Ethernet port (used for the PC tool)	RJ45 (Cabled to the door -XD3.1 Ethernet terminal)
Micro SD	MicroSD card	Micro SD
X62	24 V DC supply	2 x 3 spring force connector 0.2–1.5 mm^2
X33	STO terminal	1 x 10 spring force connector 0.2–1.5 mm^2
OptionBus	OptionBus (internal connection)	Custom
X80	Fiber optic link to power unit or star coupler board	LC-duplex
X9	Control panel terminal	iX Industrial
RTC battery	RTC battery	BR1632 (battery type)

Table 13: STO Terminal Signals (X33, XD2.2)

Terminal on the control board	Function	Terminal block	Description
41A[1]	24 V	-XD2.2:41	+ 24 V DC Output
41B[1]	24 V	-XD2.2:41	+ 24 V DC Output
42	S.INA+	-XD2.2:42	+ Safe Input Channel A
43	S.INB+	-XD2.2:43	+ Safe Input Channel B
44	S.FB+	-XD2.2:44	+ STO Feedback
45A[1]	GND	-XD2.2:45	0 V/GND
45B[1]	GND	-XD2.2:45	0 V/GND
46	S.INA-	-XD2.2:46	- Safe Input Channel A
47	S.INB-	-XD2.2:47	- Safe Input Channel B
48	S.FB-	-XD2.2:48	- STO Feedback

1) Terminals 41A, 41B, 45A, and 45B have double pins to make connections easier.

For more information on the STO safety function, see *the iC7 Series Functional Safety Operating Guide, Air-cooled and Liquid-cooled System Modules* (AE10, AE11, IE10, and IE11) or *the iC7-Automation Functional Safety Operating Guide, Frequency Converters* (FE9 and FE10).

Table 14: 24 V DC Supply Signals (X62, XD2.3)

Terminal on the control board	Function	Terminal block	Description
101	+24 V input	-XD2.3:101	Internal +24 V DC, 60 W control supply
102	GND	-XD2.3:102	Power supply ground
61	+24 V external input	-XD2.3:61	External +24 V DC control supply, maximum 10 A. Must be fuse-protected. Possible to daisy chain for multiple controllers.
62	GND	-XD2.3:62	Power supply ground
63	+24 V output	-XD2.3:63	+24 V DC output for daisy chain, only available when the +24 V DC external input control supply is used.
64	GND	-XD2.3:64	Power supply ground

7.5 Star Coupler Board

Enclosed drives consist of multiple power units that are connected via a star coupler board to 1 control unit.

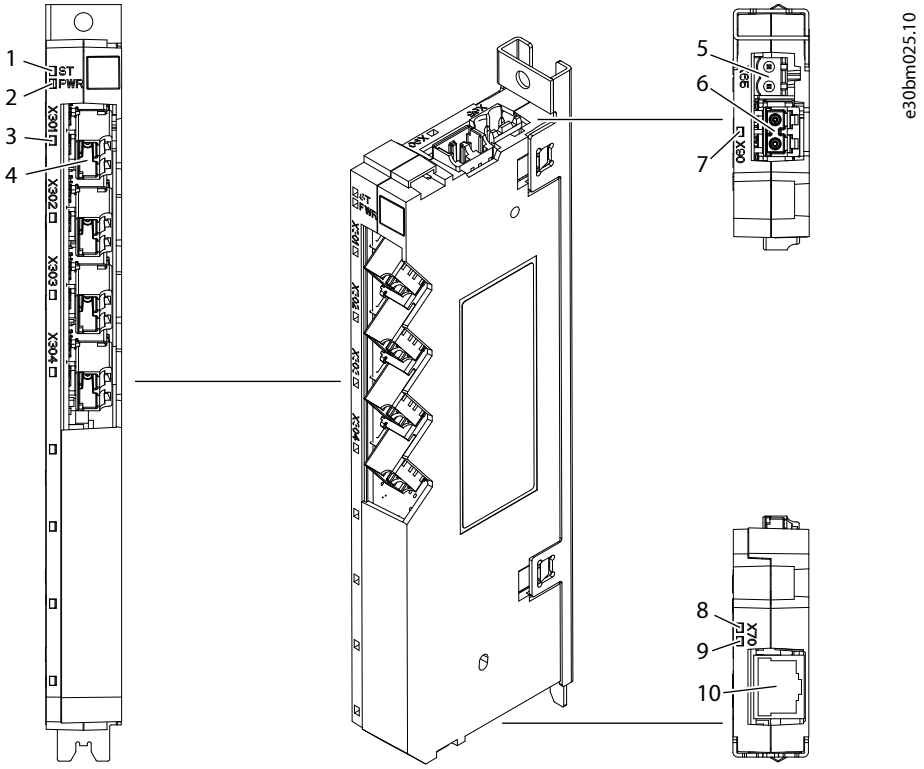

Figure 66: Terminal and Indicator Light Locations on the 4-port Star Coupler Board

Danfoss Drives Oy © 2026.06

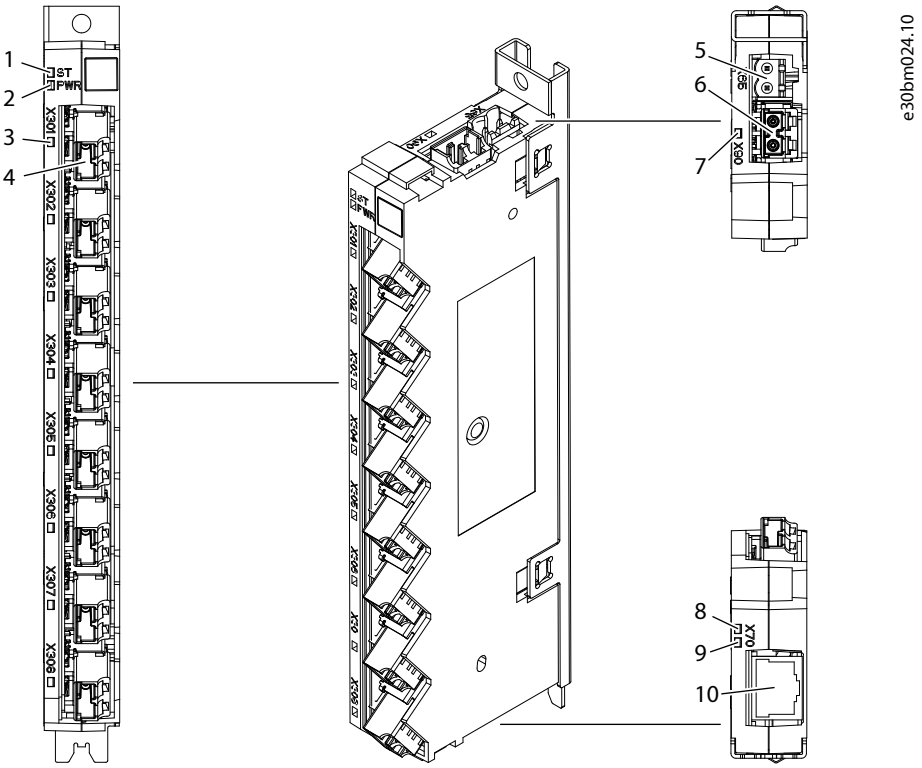

Figure 67: Terminal and Indicator Light Locations on the 8-port Star Coupler Board

1	Board configuration status indicator	2	+24 V power status indicator
3	Power unit connection status indicators	4	Fiber connection to the power unit (X301–X316)
5	+24 V power supply (X65)	6	Fiber connection to the control board (X90)
7	Control link status indicator	8	Ethernet speed indicator
9	Ethernet link activity indicator	10	Ethernet port (X7)

7.6 I/O and Relay Option Connections

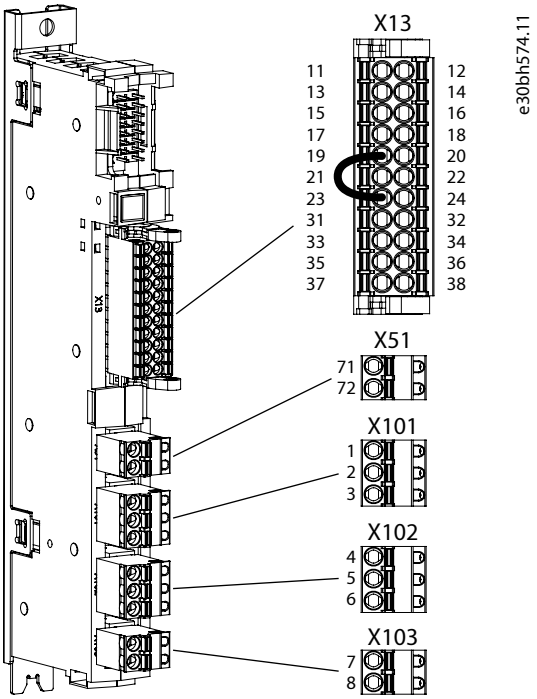

Figure 68: I/O and Relay Option Terminal Block and Terminal Numbering

Table 15: I/O and Relay Option Signals

Terminal	Function	Connector type
X13	I/O terminal	2 x 11 spring force connector 0.2–1.5 mm^2
X51	Thermistor input	1 x 2 spring force connector 0.25–2.5 mm^2
X101	Relay 1	1 x 3 spring force connector 0.25–2.5 mm^2
X102	Relay 2	1 x 3 spring force connector 0.25–2.5 mm^2
X103	Relay 3	1 x 2 spring force connector 0.25–2.5 mm^2

Table 16: I/O Terminal Signals (X13)

Terminal	Function	Terminal block	Description
11	+24 V_{out}	XD2.1:11	Control voltage output. 24 V DC (-15...+20%) Maximum current 200 mA Short-circuit protected
12	+24 V_{out}	XD2.1:12	
13	DI 1	XD2.1:13	Configurable digital input, galvanically isolated. 24 V DC, 0 < 5 V, 1 > 15 V. Input load 7.5 mA constant current + 10 kΩ resistive load, maximum pulse frequency 100 kHz.
14	DI 2	XD2.1:14	
15	DI 3	XD2.1:15	
16	DI 4	XD2.1:16	
17	DI 5	XD2.1:17	
18	DI 6	XD2.1:18	

Danfoss Drives Oy © 2026.06

Table 16: I/O Terminal Signals (X13) - (continued)

Terminal	Function	Terminal block	Description
19	DGND	XD2.1:19	Digital input ground, not isolated by default. When using the internal +24 V_{out} supply, connect the external jump wire between DGND and GND. When using the external +24 V DC supply, remove the external jump wire between DGND and GND.
20	DGND	XD2.1:20	
21	DO 1	XD2.1:21	Configurable digital output.(1) Push-pull 24 V/50 mA Open collector (NPN/PNP) 48 V/50 mA Short-circuit protected
22	DO 2	XD2.1:22	
23	GND	XD2.1:23	I/O ground. Ground for digital outputs, +10 V Ref, +24 V_{out}, analog inputs, and analog outputs.
24	GND	XD2.1:24	
31	AO 1	XD2.1:31	Configurable analog output. Voltage mode: • 0...10 V • $R_L \geq 1$ kΩ • accuracy ≤ ± 0.5% of full scale • short-circuit protected Current mode: • 0...20 mA • $R_L \leq 600$ Ω • accuracy ≤ ± 0.5% of full scale • short-circuit protected
32	+10 V ref.	XD2.1:32	10 V (0...+3%), maximum current 10 mA
33	AI 1	XD2.1:33	Configurable analog input. Voltage mode: • 0 ± 10 V • single-ended • R_i ~ 10 kΩ • accuracy ± 0.5% of full scale Current mode: • 0 ± 20 mA • differential • R_i ~ 200 Ω • accuracy ± 0.5% of full scale
34	AI 2	XD2.1:34	
35	GND	XD2.1:35	I/O ground. Ground for digital outputs, +10 V Ref, +24 V_{out}, analog inputs, and analog outputs.
36	GND	XD2.1:36	
37	GND	XD2.1:37	
38	GND	XD2.1:38	

1) Digital outputs are not recommended for main circuit breaker control, use relay outputs instead.

Table 17: Thermistor Input Signals (X51)

Terminal	Function	Terminal block	Description
71	TI+	XD2.1:71	Thermistor input, galvanically isolated. R_{trip} = 4 kΩ
72	TI-	XD2.1:72	

Table 18: Relay 1 Signals (X101)

Terminal	Function	Terminal block	Description
1	COM	XD2.1:1	Configurable relay output. Switching capacity: • 24 V DC/8 A • 250 V AC/8 A • 125 V DC/0.4 A Minimum switching load: 5 V/10 mA
2	NO	XD2.1:2	
3	NC	XD2.1:3	

Table 19: Relay 2 Signals (X102)

Terminal	Function	Terminal block	Description
4	COM	XD2.1:4	Configurable relay output. Switching capacity: • 24 V DC/8 A • 250 V AC/8 A • 125 V DC/0.4 A Minimum switching load: 5 V/10 mA
5	NO	XD2.1:5	
6	NC	XD2.1:6	

Table 20: Relay 3 Signals (X103)

Terminal	Function	Terminal block	Description
7	COM	XD2.1:7	Configurable relay output. Switching capacity: • 24 V DC/8 A • 250 V AC/8 A • 125 V DC/0.4 A Minimum switching load: 5 V/10 mA
8	NO	XD2.1:8	

7.7 I/O and Relay Option Interface

7.7.1 Analog Inputs

The I/O and Relay Option has 2 analog inputs that can be configured with the software to voltage input or current input. The Table 21 shows the specification for the analog inputs.

The analog inputs are protected in overvoltage conditions.

Table 21: Analog Input Types, Values, and Tolerances

Parameter	Value
Measuring range: voltage mode	-10...+10 V
Measuring range: current mode	-20...+20 mA

Danfoss Drives Oy © 2026.06

Table 21: Analog Input Types, Values, and Tolerances - (continued)

Parameter	Value
Input impedance	Voltage mode ≈ 10 kΩ
	Current mode ≈ 200 Ω
Accuracy	0.5% of full scale
Reaction time	0...90% step: < 1 ms
Number of inputs	2
Overvoltage limit	+15/-15 V
Overcurrent limit	+32/-32 mA
Electrical fast transient (EFT)	2 kV

7.7.2 Analog Outputs

The I/O and Relay Option has 1 analog output that can be configured with the software to voltage output or current output. Table 22 shows the specification for the analog output.

The analog output is protected in overvoltage conditions.

Table 22: Analog Output Types and Values

Parameter	Value
Output voltage range	0...10 V
Output current range	0...20 mA
Accuracy	0.5% of full scale
Reaction time	0...90% step: <1 ms
Electrical fast transient (EFT)	2 kV

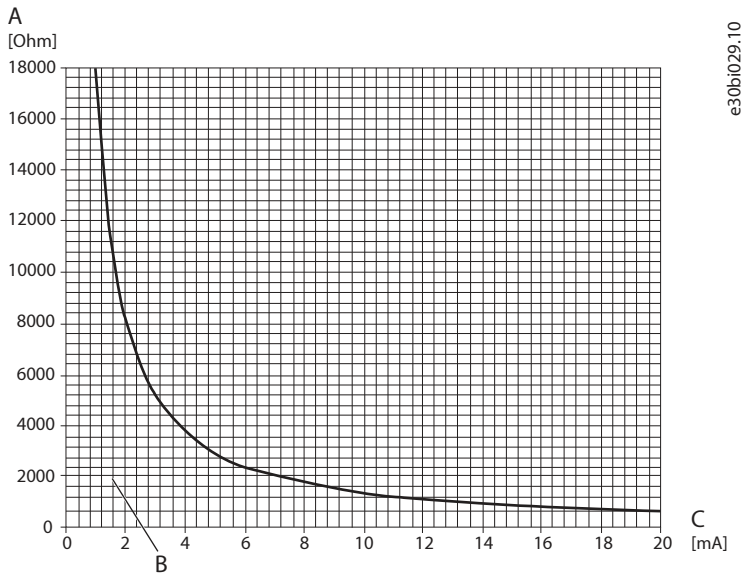

Figure 69: Allowed Load Resistance of Analog Output in Current Mode

A	Load resistance	B	Allowed load resistance
C	Output current		

7.7.3 Digital Inputs

The I/O and Relay Option has 6 digital inputs. By default, the digital inputs are not isolated, because there is an external wire between the connector pins 19 (D_{GND}) and 23 (GND). The digital inputs can be functionally isolated from the PCB ground of the I/O and Relay Option by removing the wire. The digital inputs are polarity free.

Digital inputs are overvoltage protected.

Table 23: Digital Inputs Logic Levels and Other Requirements

Parameter	Value
Recommended operation voltage	0...24 V +20%/-10%
Overvoltage limit	33 V
Logic level	0 = V_{TL} ≤ 5 V 1 = V_{TH} ≥ 15 V
Input load	7.5 mA constant current and 10 kΩ resistive load
Reaction time	< 5 µs
Maximum frequency	100 kHz
Electrical fast transient (EFT)	2 kV

7.7.4 Digital Outputs

The I/O and Relay Option has 2 digital outputs. The digital outputs are the push-pull type. The digital outputs can also be used as the open collector type.

The digital outputs are short-circuit protected.

Table 24: Digital Output Voltage and Current

Parameter	Value
Output voltage	0 = max 2 V 1 = min 20 V
Rated current	±50 mA
Overcurrent limit	±80 mA
Maximum voltage when used as open collector output	48 V
Maximum frequency	100 kHz
Electrical fast transient (EFT)	2 kV

1) Control unit power supply 24 V +20%/-10% and I_{load} max 50 mA

7.7.5 Relay Outputs

The I/O and Relay Option has 3 relay outputs. Relay 1 and Relay 2 have NO and NC contacts [1 form C (CO)]. Relay 3 has only an NO contact [1 form A (NO)]. The relay output interface is reinforced for system voltages ≤ 300 V. The lifetime for relays is 100.000 cycles.

Table 25: Relay Output Values

Parameter	Value
Rated voltage	250 V AC
Maximum switching voltage	400 V AC
Rated current	8 A
Breaking capacity maximum	2000 VA

Danfoss Drives Oy © 2026.06

Table 25: Relay Output Values - (continued)

Parameter	Value
Operate time maximum	9 ms
Release time maximum	5 ms
DC breaking capacity	See Figure 70.

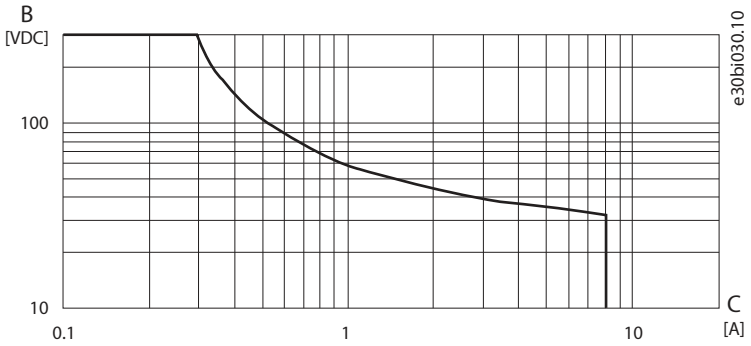

Figure 70: Maximum DC Load Breaking Capacity

B	DC voltage	C	DC current

7.7.6 Analog Reference Voltage Output

The I/O and Relay Option contains 1 analog reference voltage output.

Table 26: Analog Reference Voltage Output Values

Parameter	Value
Nominal voltage	10 V
Accuracy	-3...+3% of nominal voltage
Maximum output current	10 mA
Short-circuit current	13 mA
Electrical fast transient (EFT)	2 kV

7.7.7 24 V DC Voltage Output

The I/O and Relay Option contains 1 voltage output of 24 V DC.

Table 27: 24 V DC Voltage Output

Parameter	Value
Nominal voltage	24 V
Accuracy	-15...+20%
Maximum output current	200 mA
Short-circuit current	250 mA
Electrical fast transient (EFT)	2 kV

7.7.8 Thermistor Input

The I/O and Relay Option contains 1 thermistor input. Thermistor input has basic isolation for system voltages ≤ 600 V and reinforced isolation for system voltages ≤ 300 V (OVC III 3000 m). For system voltage of 600 V, supplementary insulation is necessary at the motor end.

Table 28: Thermistor Input

Parameter	Value
Electrical fast transient (EFT)	2 kV
Sensor	R_{trip} 4.0 kΩ (PTC)

7.8 Control Cable Routing

Use the control cable grommets and tubes to route the control cables into the control compartment. There are control cable grommets at the top and at the bottom of the cabinet. After installation, make sure that the grommet is tight.

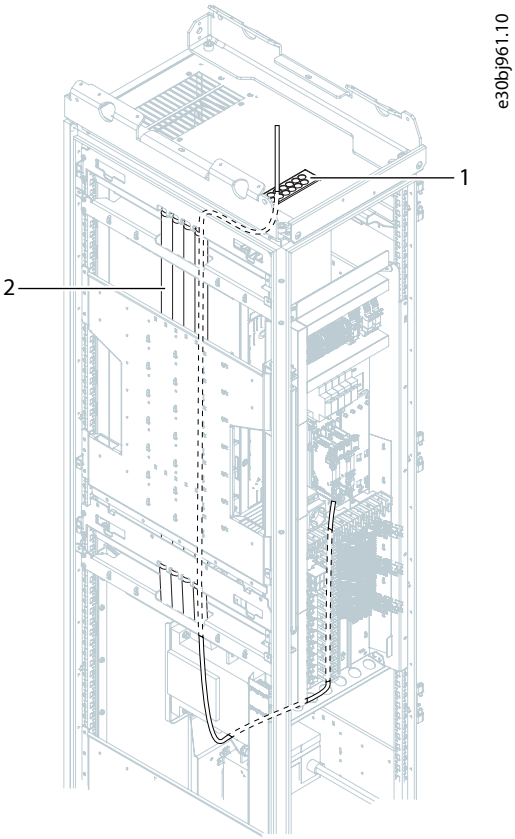

Figure 71: Routing of Control Cables from the Top, FE9, FE10

1	Control cable grommets	2	Tubes

Danfoss Drives Oy © 2026.06

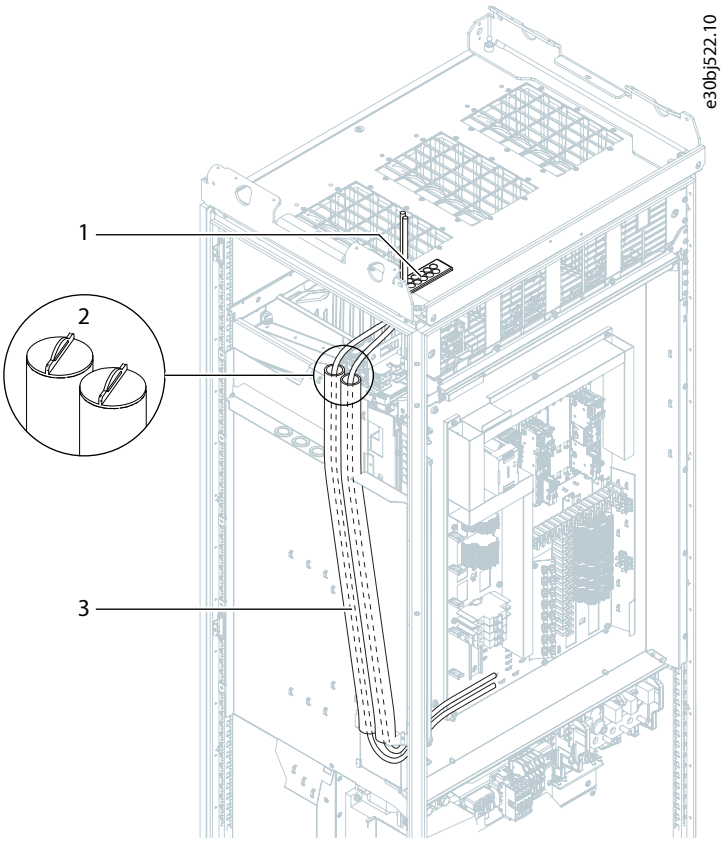

Figure 72: Routing of Control Cables from the Top, AE10/11, IE10/11

1	Control cable grommets	2	Two corks, to be removed when routing control cables from the top
3	Tubes, internal diameter 32 mm (1.3 in)		

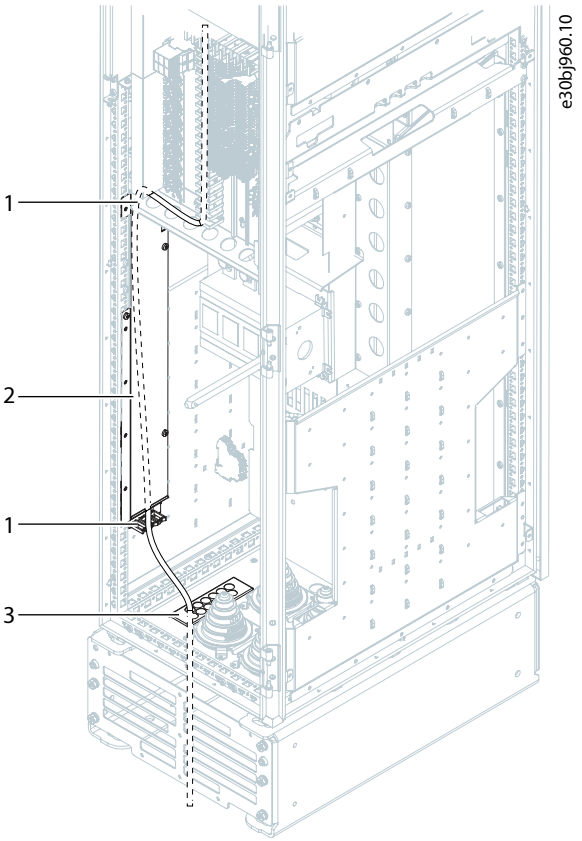

Figure 73: Routing of Control Cables from the Bottom, FE9, FE10

1	Cable clamps	2	Protection plate
3	Control cable grommets		

Danfoss Drives Oy © 2026.06

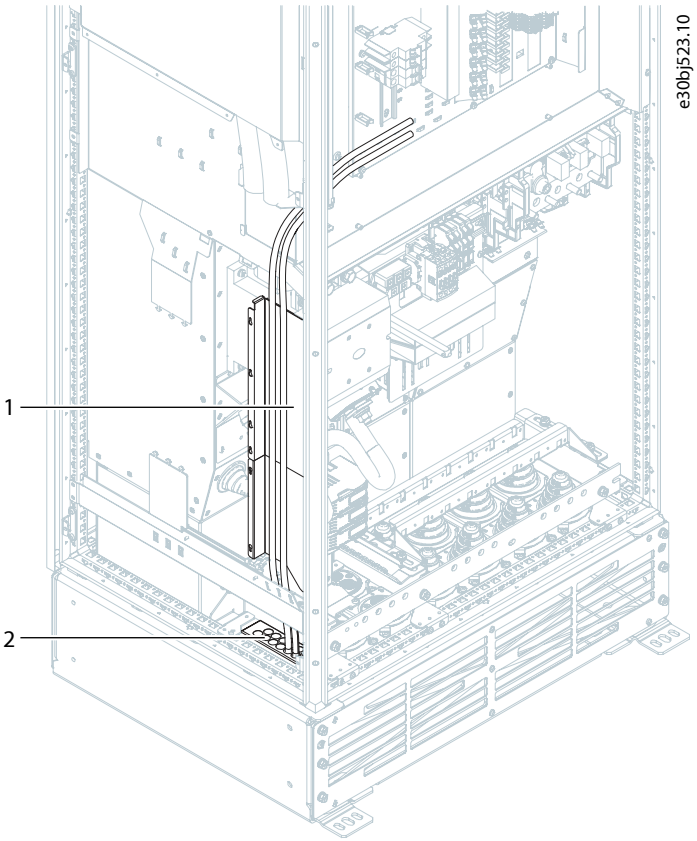

Figure 74: Routing of Control Cables from the Bottom, AE10/11, IE10/11

1	Protection plate	2	Control cable grommets

7.9 Installing Boards to the Modular Control Unit

Use these instructions to install a board, for example an option board, to the mounting plate of the modular control unit.

NOTICE

DAMAGE TO OPTION BOARDS

Do not install, remove, or replace option boards on the drive when the power is on. Doing this can cause damage to the boards.

- Switch off the drive before installing, removing, or replacing option boards on the drive.

1. Remove the screw that is pre-attached to the fixing point at the top of the mounting plate and keep it.
2. Slide the lower edge of the board to the mounting plate fixing point.

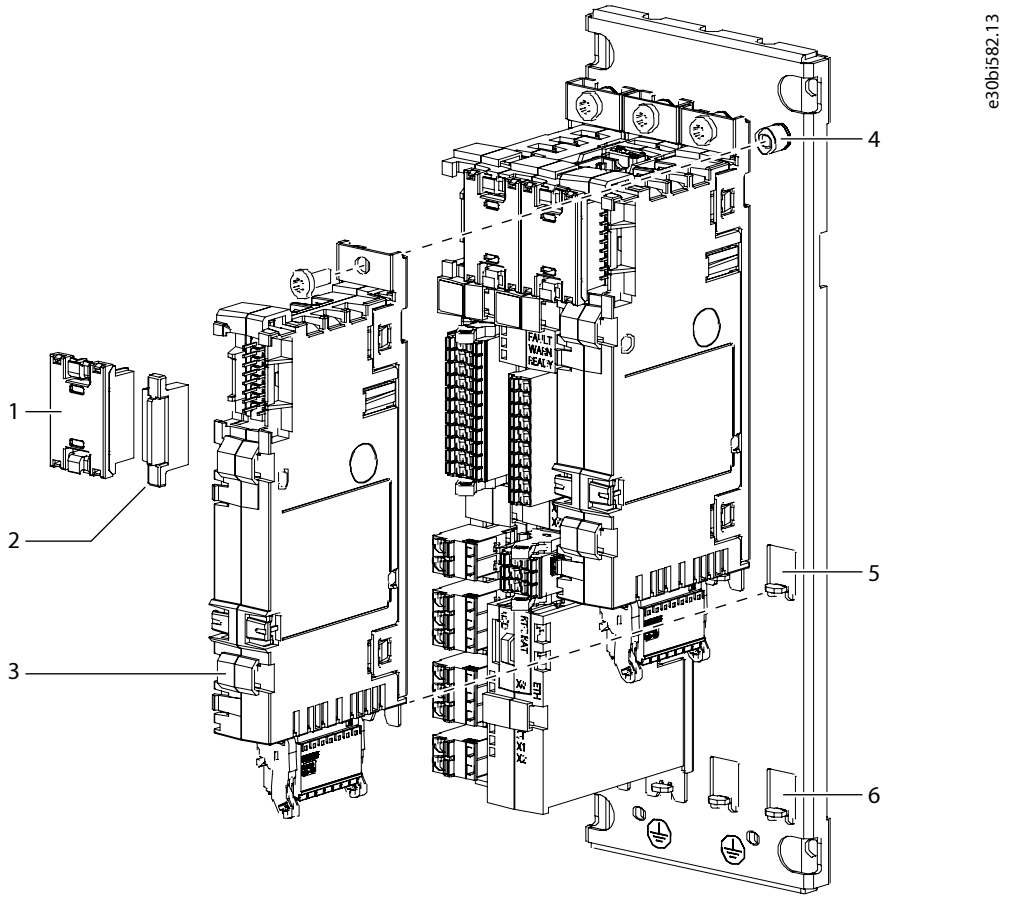

Figure 75: Installing a Board to the Modular Control Unit Mounting Plate

1	Option connector	2	Option terminal cover
3	Option board	4	Fixing point at the top
5	Fixing point at the middle	6	Fixing point at the bottom

3. Use the screw to attach the board to the fixing point at the top.
4. Attach an option connector to the newly installed board and the board next to it.
5. Attach option terminal covers to the empty terminals.

7.10 Installing the Control Cables

7.10.1 Requirements for the Control Cables

Requirements for the control cables:

- Wire size: 0.25–4 mm^2 (22–12 AWG)
- Wire size with end ferrule: 0.25–2.5 mm^2 (22–14 AWG)
- Wire stripping length: 10–12 mm (0.4–0.5 in)

Make sure that the control cables are long enough to prevent tight bends in the cables between the control compartment and the frame of the drive. Use a flexible cable with fine-stranded wires meant for mobile installation.

7.10.2 Installing the Control Cables

1. Install the control cables into the option board or the terminal block.

Danfoss Drives Oy © 2026.06

See the pin numbering of the I/O and Relay Option in 7.6 I/O and Relay Option Connections and the pin numbering of the terminal blocks in 7.4 Control Compartment Connections.

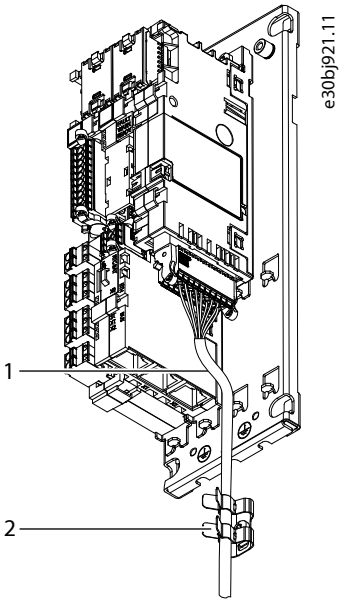

Figure 76: Example of Installing the Control Cables on the Option Board

1	Control cable	2	Cable clamp

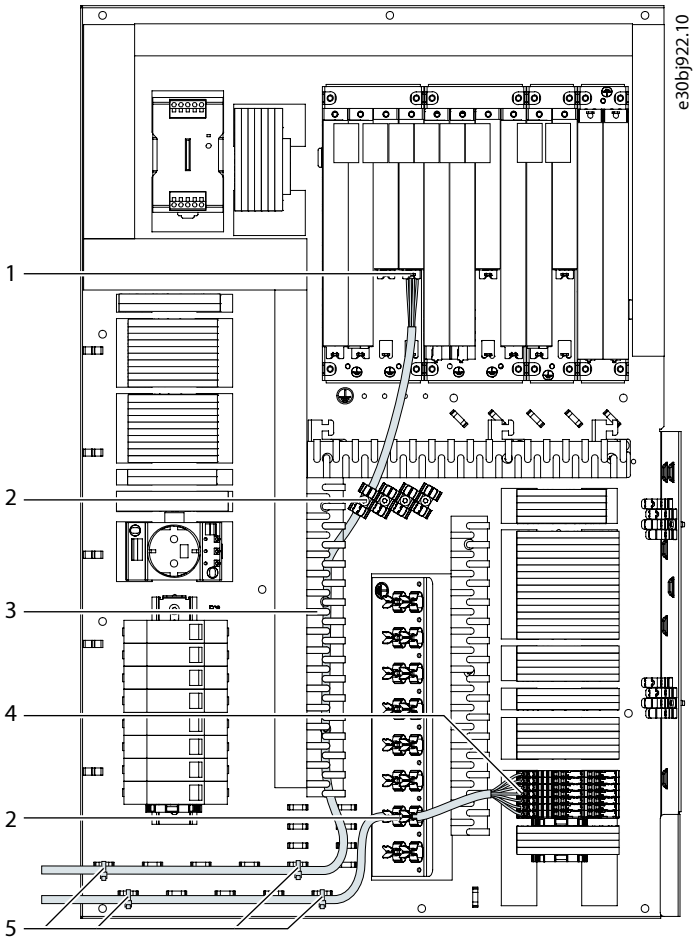

Figure 77: Example of Installing the Control Cables on Terminals Blocks

1	Option board	2	Cable clamp
3	Cable duct	4	Terminal block
5	Guidance for the control cable		

2. Strip the control cables. Attach the control cables to the cable clamps on the control compartment.

The lower part of the cable clamp fixes the cable to the plate and provides strain relief. The upper part provides ~360° grounding for the cable shield.

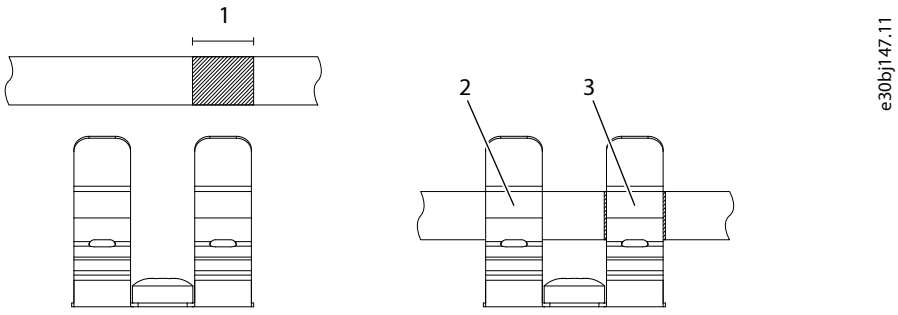

Figure 78: Stripping the Cable and Using the Grounding Plates

Danfoss Drives Oy © 2026.06

1	Stripping length, 10 mm (0.4 in)	2	Strain relief
3	Grounding		

8 Maintenance

8.1 Preventive Maintenance Recommendations

Generally, all technical equipment, including Danfoss drives, need a minimum level of preventive maintenance. To ensure trouble-free operation and long life of the drive, regular maintenance is recommended. It is also recommended as a good service practice to record a maintenance log with counter values, date, and time describing the maintenance and service actions.

Danfoss recommends the following inspections and service intervals for air-cooled drives/systems.

NOTICE

The service schedule for part replacements can vary depending on operating conditions. Under specific conditions, the combination of stressful operation and environmental conditions work together to reduce the lifetime of the components significantly. These conditions can include, for example, extreme temperature, dust, high humidity, hours of use, corrosive environment, and loading.

For operation in stressful conditions, Danfoss offers the DrivePro® Preventive Maintenance service. DrivePro® services extend the lifetime and increase the performance of the product with scheduled maintenance including customized part replacements. DrivePro® services are tailored to the specific application and operating conditions.

Table 29: Maintenance Schedule for Air-cooled Drives

Component	Inspection interval[1]	Service schedule[2]	Preventive maintenance actions
Installation			
Visual inspection	1 year	–	Check for the unusual, for example, for signs of overheating, aging, corrosion, and for dusty and damaged components.
Auxiliary equipment	1 year	According to manufacturer recommendations	Inspect equipment, switchgear, relays, disconnects, or fuses/circuit breakers. Examine the operation and condition for possible causes of operational faults or defects. The continuity check on fuses must be performed by trained service personnel.
EMC consideration	1 year	–	Inspect the wiring regarding the electromagnetic capability and the separation distance between control wiring and power cables.
Cable routing	1 year	–	Check for parallel routing of motor cables, mains wiring, and signal wiring. Avoid parallel routing. Avoid routing cables through free air without support. Check for aging and wearing of the cable insulation.
Control wiring	1 year	–	Check for tightness, damaged or crimped wires, or ribbon wires. Terminate the connections correctly with solid crimped ends. The use of shielded cables and grounded EMC plate, or a twisted pair is recommended.
Clearances	1 year	–	Check that the external clearances for proper airflow for cooling follow the requirements for the frame and product type. For clearances, refer to the local design regulations.
Sealing	1 year	–	Check that the sealing of the enclosure, the covers, and the cabinet doors are in good condition.
Corrosive environments	1 year	–	Conductive dust and aggressive gases, such as sulphide, chloride, and salt mist, can damage the electrical and mechanical components. Air filters do not remove airborne corrosive chemicals. Act based on the findings.
Drive			

Danfoss Drives Oy © 2026.06

Table 29: Maintenance Schedule for Air-cooled Drives - (continued)

Component	Inspection interval[1]	Service schedule[2]	Preventive maintenance actions
Programming	1 year	–	Check that the drive parameter settings are correct according to the motor, drive application, and I/O configuration. Only trained service personnel are allowed to perform this action.
Control panel	1 year	–	Check that the display pixels are intact. Check the event log for warnings and faults. Repetitive events are a sign of potential issues. If necessary, contact a local service center.
Drive cooling capacity	1 year	–	Check for blockages or constrictions in the air passages of the cooling channel. The heat sinks must be free of dust and condensation.
Capacitors, DC link	1 year	8–15+ years	The expected lifetime of the capacitors depends on the loading profile of the application and the ambient temperature. For applications with heavy loads in demanding environments or high ripple currents, replace electrolytic capacitors every 8 years and plastic foil capacitors every 12 years. If within the specifications of the drive type, replace every 10–15+ years. Only trained service personnel are allowed to perform this action.
Cleaning and filters	1 year	–	Clean the interior of the enclosure annually, and more frequently if necessary. The amount of dust in the filter or inside the enclosure is an indicator for when the next cleaning or filter replacement is required.
Fans	1 year	3–10 years	Inspect the condition and operational status of all cooling fans. With the power off, the fan axis should feel tight, and spinning the fan with a finger, the rotation should be almost silent and not have abnormal rotation resistance. When in RUN mode, fan vibration, excessive or strange noise is a sign of the bearings wearing, and the fan must be replaced.
Grounding	1 year	–	The drive system requires a dedicated ground wire connecting the drive, the output filter, and the motor to the building ground. Check that the ground connections are tight and free of paint or oxidation. Daisy-chain connections are not allowed. If applicable, braided straps are recommended.
PCB	1 year	10–12 years	Visually inspect the printed circuit boards for signs of damage or degrading due to aging, corrosive environments, dust, or environments with high temperatures. Only trained service personnel are allowed to perform the inspection and service action.
Power cables and wiring	1 year	–	Check for loose connections, aging, insulation condition, and proper torque to the drive connections. Check for proper rating of fuses and continuity check. Observe if there are any signs of operation in a demanding environment. For example, discoloration of the fuse housing can be a sign of condensation or high temperatures.
Vibration	1 year	–	Check for abnormal vibration or noise coming from the drive to ensure that the environment is stable for electronic components.
Insulator gaskets	1 year	10–15 years	Inspect the insulators for signs of degradation due to high temperature and aging. Replacement is based on findings or done at the same time as DC capacitor replacement. Only trained service personnel are allowed to perform this action.
Batteries	1 year	7–10 years	Replace the batteries according to the manufacturer recommendation. Replace the real-time clock battery in the control unit every 7–10 years.
Spare parts			

Table 29: Maintenance Schedule for Air-cooled Drives - (continued)

Component	Inspection interval[1]	Service schedule[2]	Preventive maintenance actions
Spare parts	1 year	2 years	Stock spares in their original boxes in a dry and clean environment. Avoid hot storage areas. Electrolytic capacitors require reforming as stated in the service schedule. The reforming must be performed by trained service personnel.
Exchange units and units stored for long periods before commissioning	1 year	2 years	Visually inspect for signs of damage, water, high humidity, corrosion, and dust within the visual field of view without disassembly. The exchange units with mounted electrolytic capacitors require reforming as stated in the service schedule. The reforming must be performed by trained service personnel.

1) Defined as the time after the commissioning/startup or the time from the previous inspection.

2) Defined as the time after the commissioning/startup or the time from the previous service schedule actions.

8.2 Using the Product Modified Label

In the accessories bag, there is also a "product modified" label. The function of the label is to tell the service personnel about the changes that are made in the drive.

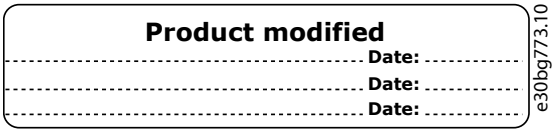

Figure 79: The Product Modified Label

1. Attach the label on the side of the drive, in a place where it is easy to find.
   a. Attach the label, for example, next to the other labels on the power unit.
2. If changes are made to the drive, write the change and date on the label.

8.3 Replacing the RTC Battery

The real-time clock (RTC) battery can be used to provide a reliable power source for the RTC. If power is lost in the control unit, the RTC battery keeps the internal real time. The time is used for scheduled activities and timestamping occurrences based on application needs. The RTC battery is optional and comes preinstalled if the option is selected.

⚠ CAUTION

RISK OF FIRE AND EXPLOSION

- Replace the battery with either a Panasonic BR1632A (3 V, 125 °C), Jauch Quartz CR1632 (246335) (3 V, 85 °C), or Renata Batteries CR1632 (3 V, 85 °C) coin-cell battery only. Using another battery may present a risk of fire or explosion. Only qualified personnel can exchange the battery.
- For detailed safety information, refer to the documentation provided with the battery.

⚠ CAUTION

RISK OF FIRE OR EXPLOSION

- Do not recharge or disassemble the battery, or dispose of it in fire.

1. Locate the RTC battery holder on the control board of the control unit.
2. Pull from the handle next to the text RTC BAT.

Danfoss Drives Oy © 2026.06

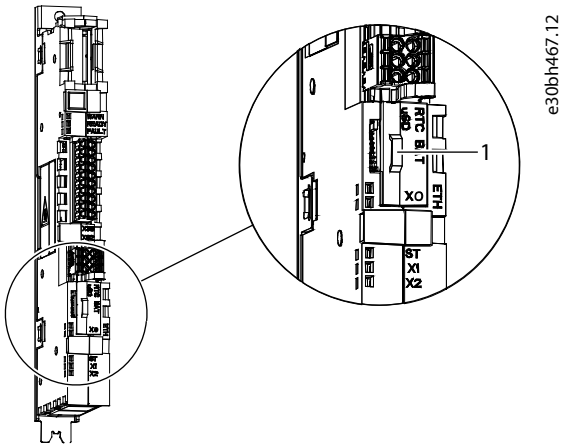

Figure 80: Location of the RTC Battery

1	The handle

The battery holder slides out.

3. To remove the battery, push it on the tooth side and slide it out of the plastic holder.

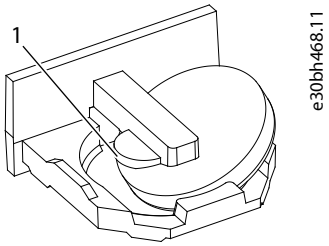

Figure 81: Replacing the Battery

1	The tooth

4. To put a new battery in place, start from the opposite side and slide it into the slot in the holder, the plus side towards the tooth.

The correct battery type is a coin type lithium battery.

5. Push the holder back into the control board.

8.4 Cleaning or Replacing the Door Filters

Clean filters are important to ensure a good air flow into the cabinet. The filters are only included in drives with protection rating IP54.

1. Locate the door filters on the outside of the cabinet door.
2. Pinch together the release tabs on the fan grill and remove the grill from the filter frame.

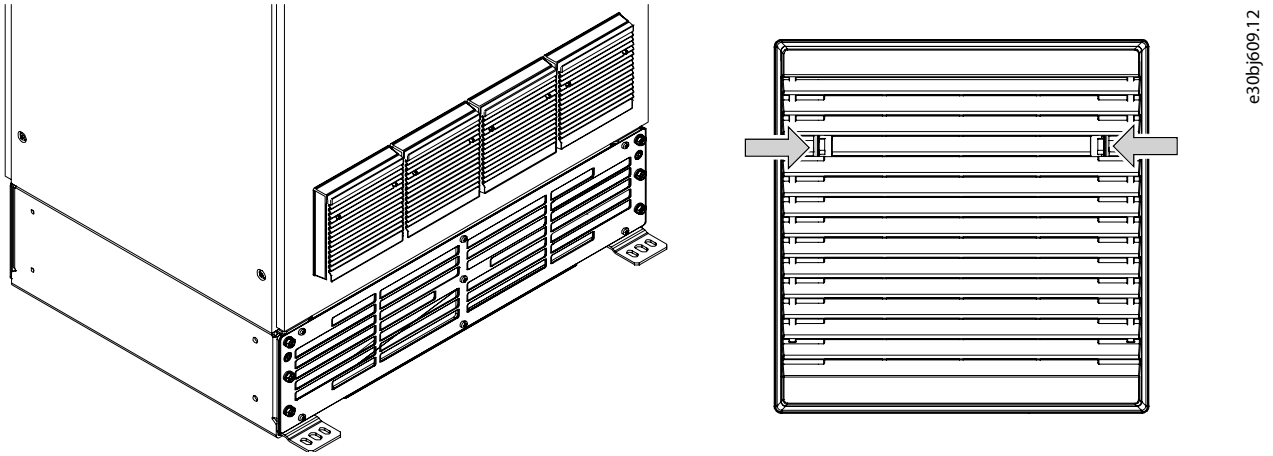

Figure 82: Removing the Fan Grill

3. Remove and clean or replace the filter.
4. Put the cleaned or new filter into the filter frame on the outside of the door.
5. Reposition the fan grill over the filter and press to snap into place.

Danfoss Drives Oy © 2026.06

9 Specifications

9.1 Tightening Torques

Table 30: Tightening Torques

Frame	Bolt	Tightening torque	
		Nm	In-lb
FE9, FE10	M4	1.8	16
	M5	2.7	24
	M6	6	53
FE9, FE10, AE10, AE11, IE10, IE11	M8	20	180
	M10	40	350
FE9, FE10, AE10, AE11, IE10, IE11	M12	70	620
	Grounding bolt (M8)	13.5	120

9.2 Dimension Illustrations

9.2.1 Dimensions of the Cabinet Feet

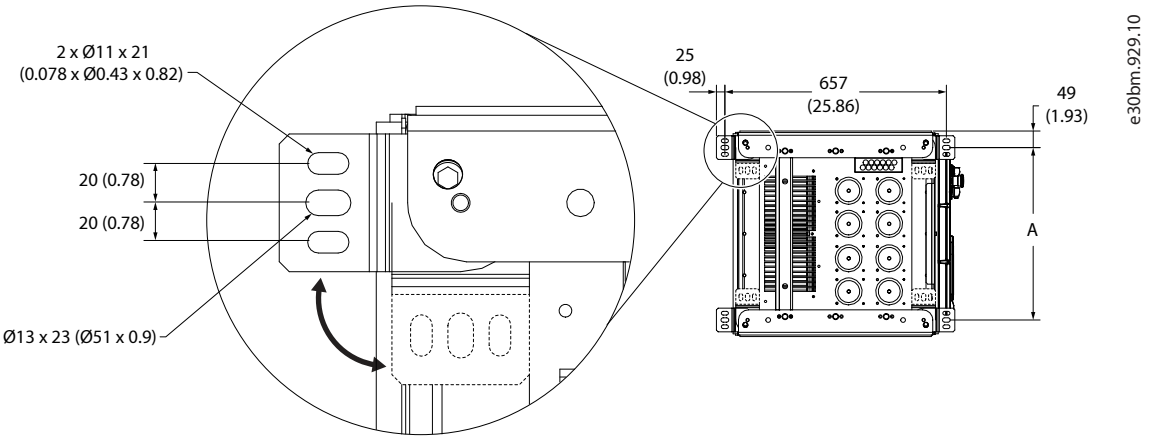

Figure 83: Dimensions of the Cabinet Feet, in mm (in)

A	310 mm, 510 mm, or 710 mm (12.2 in, 20.1 in, or 27.95 in), depending on the cabinet variant

9.2.2 Dimensions of the Enclosed Drive, FE9

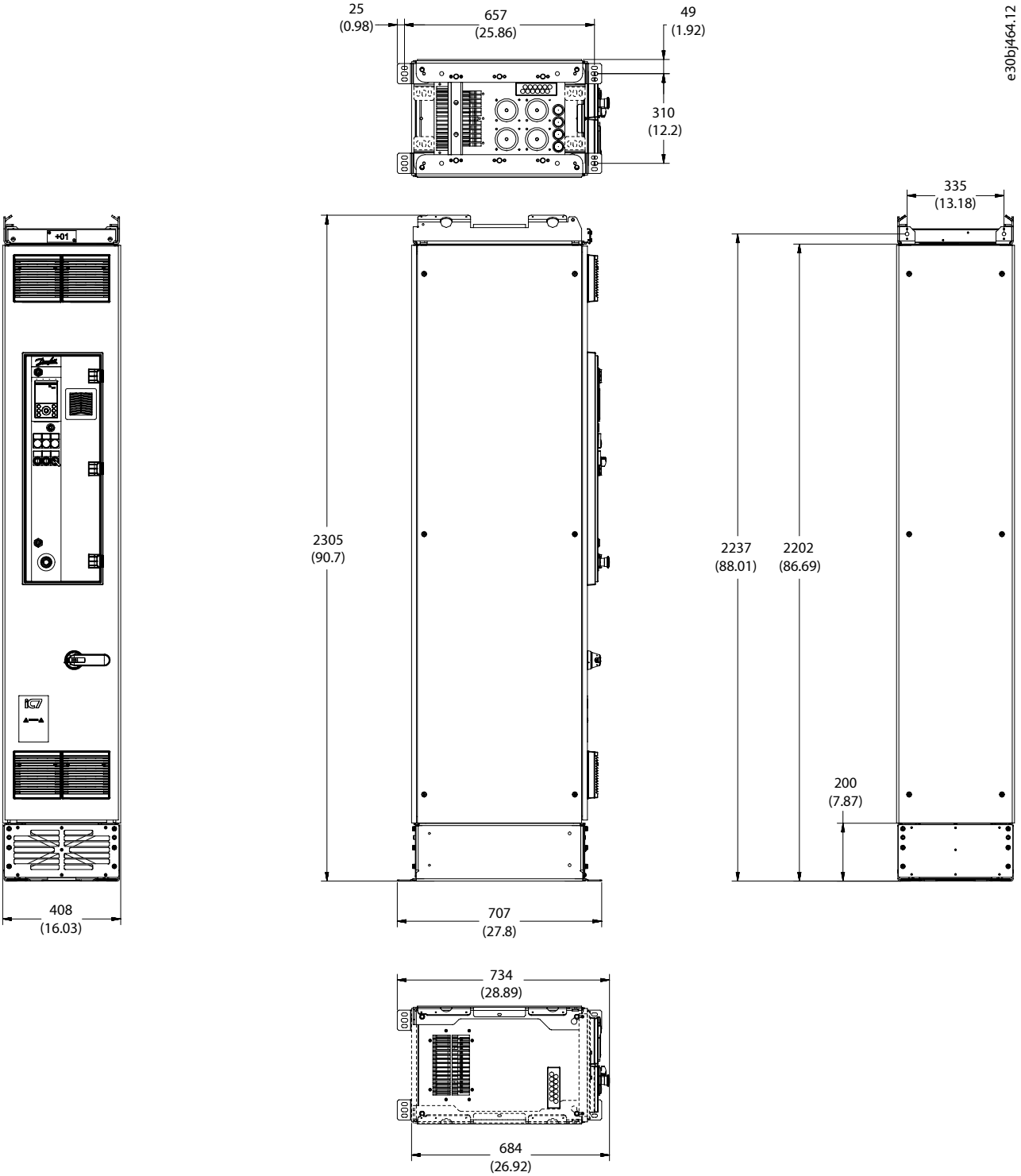

Figure 84: Dimensions of the Enclosed Drive, FE9, in mm (in)

Danfoss Drives Oy © 2026.06

9.2.3 Dimensions of the Enclosed Drive, FE10

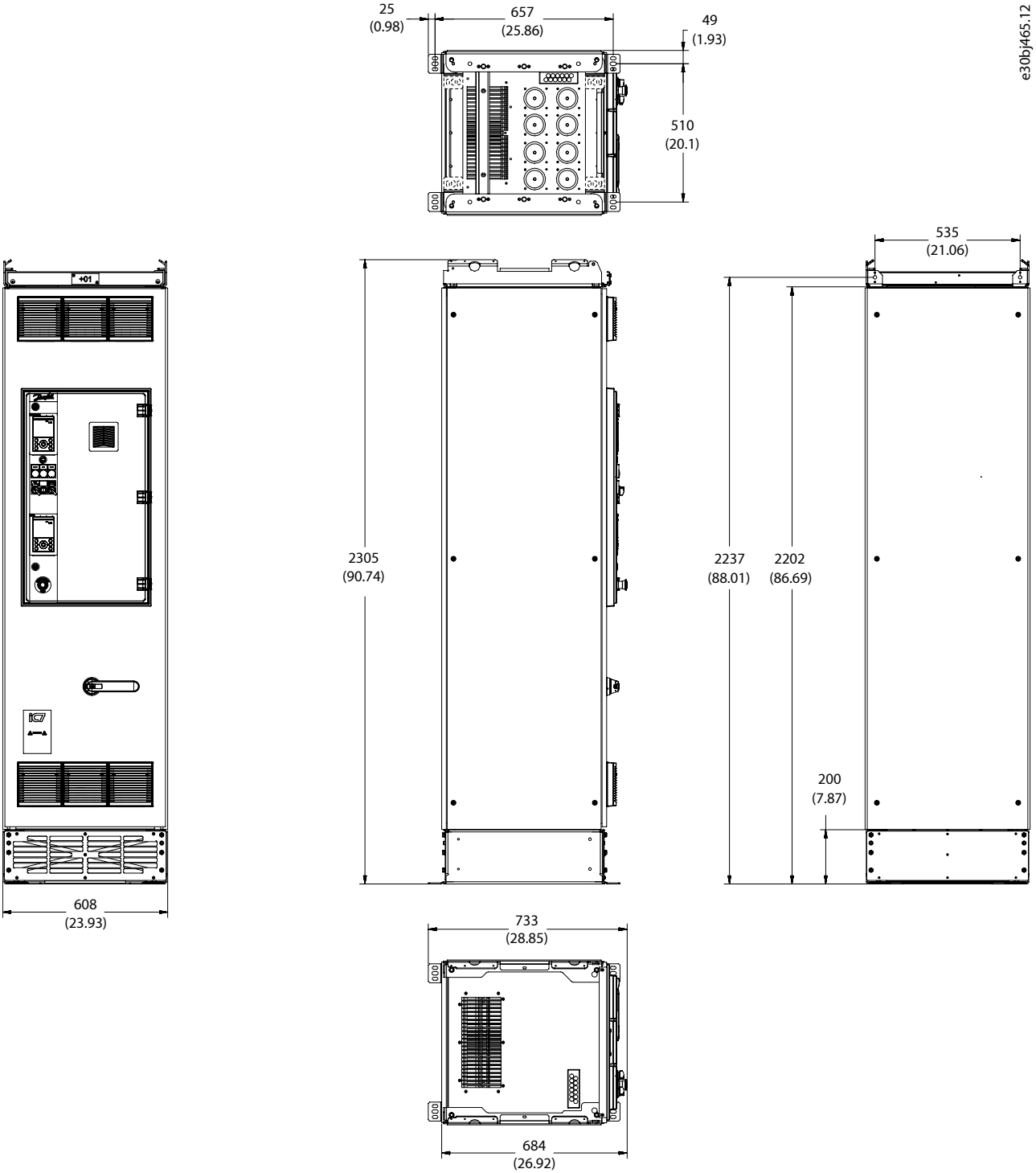

Figure 85: Dimensions of the Enclosed Drive, FE10, in mm (in)

9.2.4 Dimensions for the Bottom Cabling Option, AE10, IE10

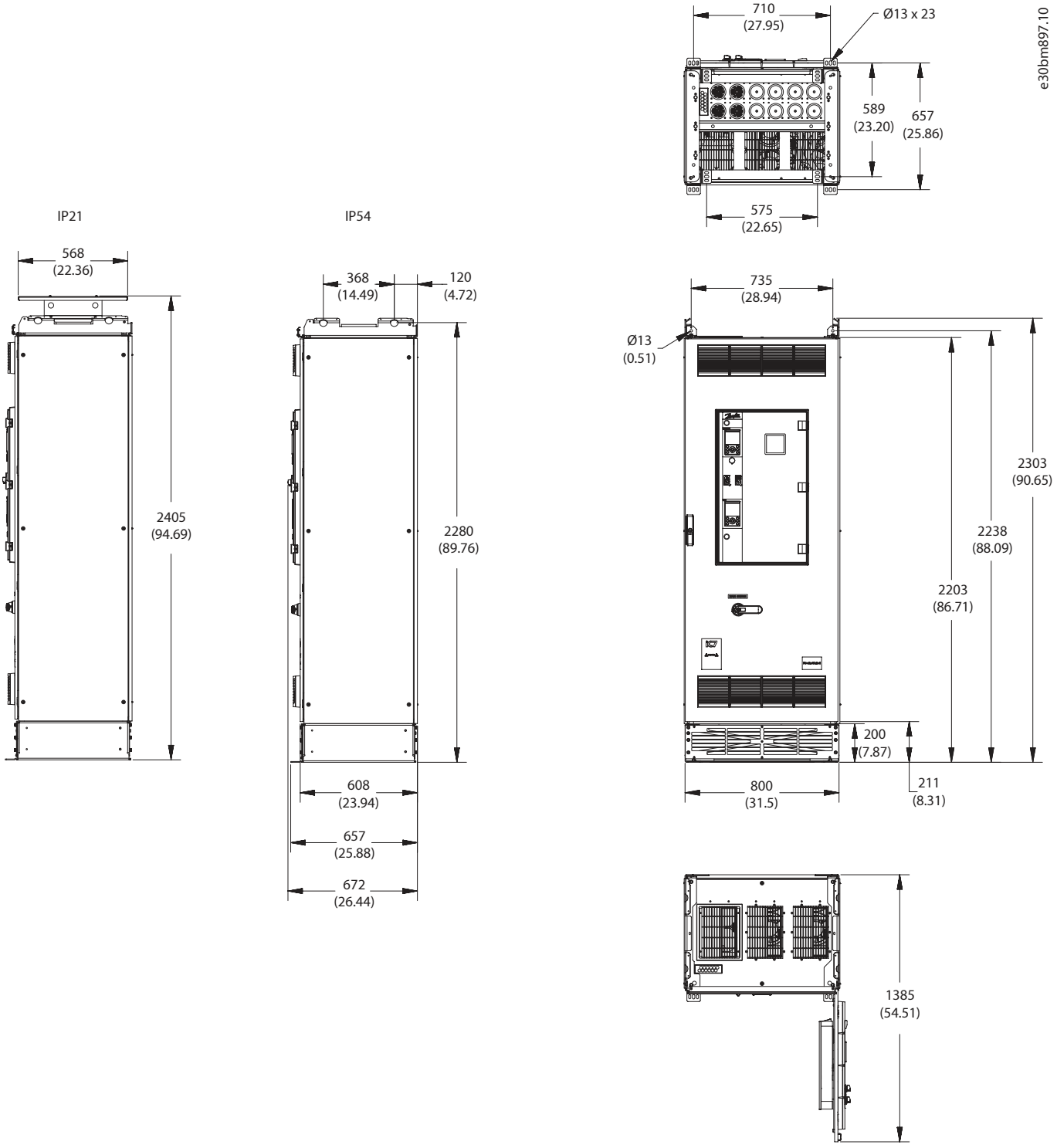

Figure 86: Dimensions for the Bottom Cabling Option, AE10, IE10, in mm (in)

Danfoss Drives Oy © 2026.06

9.2.5 Dimensions for the Bottom Cabling Option, AE11, IE11

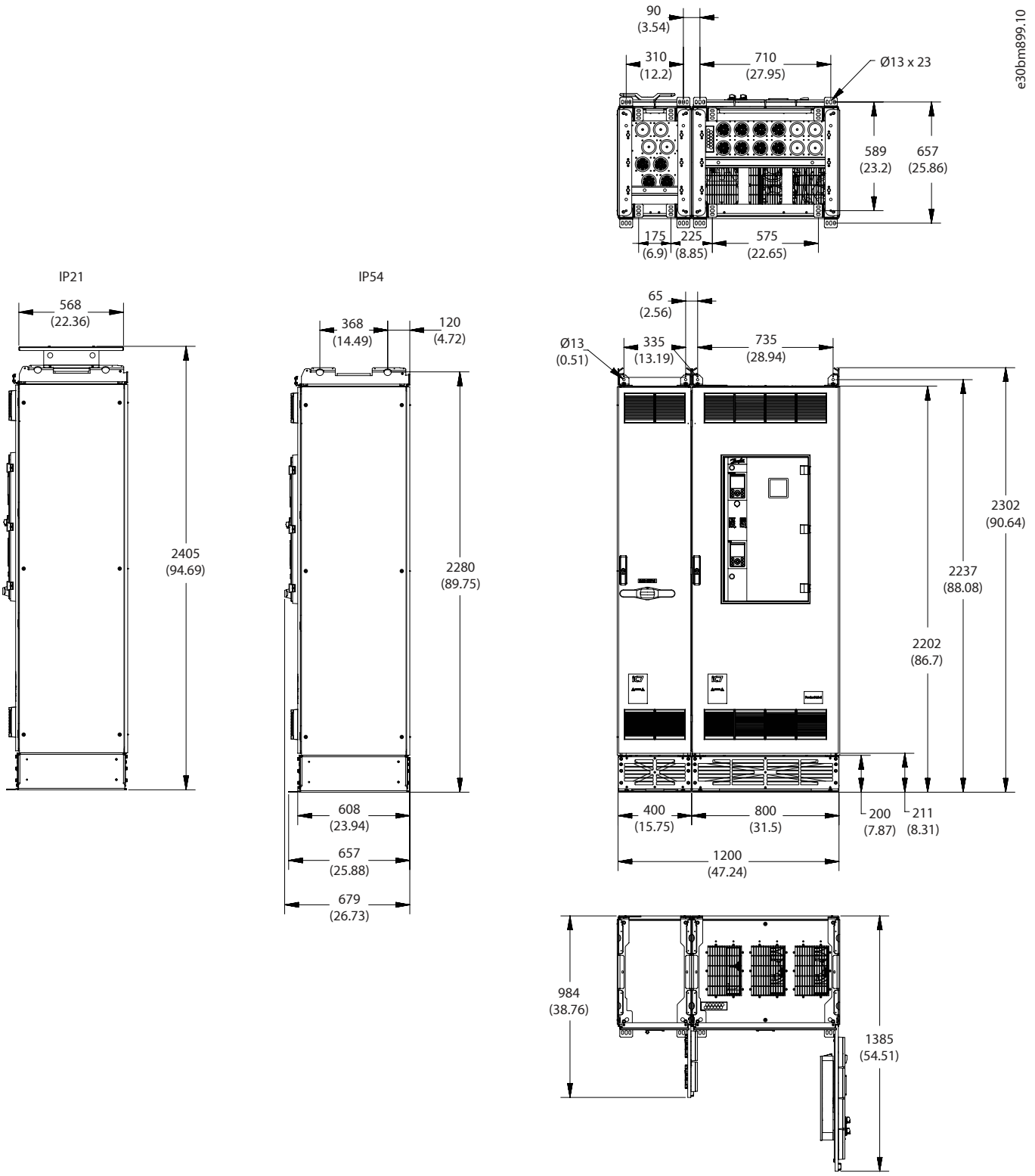

Figure 87: Dimensions for the Bottom Cabling Option, AE11, IE11, in mm (in)

9.2.6 Dimensions for the Bottom Cabling Option, 2 x AE10, 2 x IE10

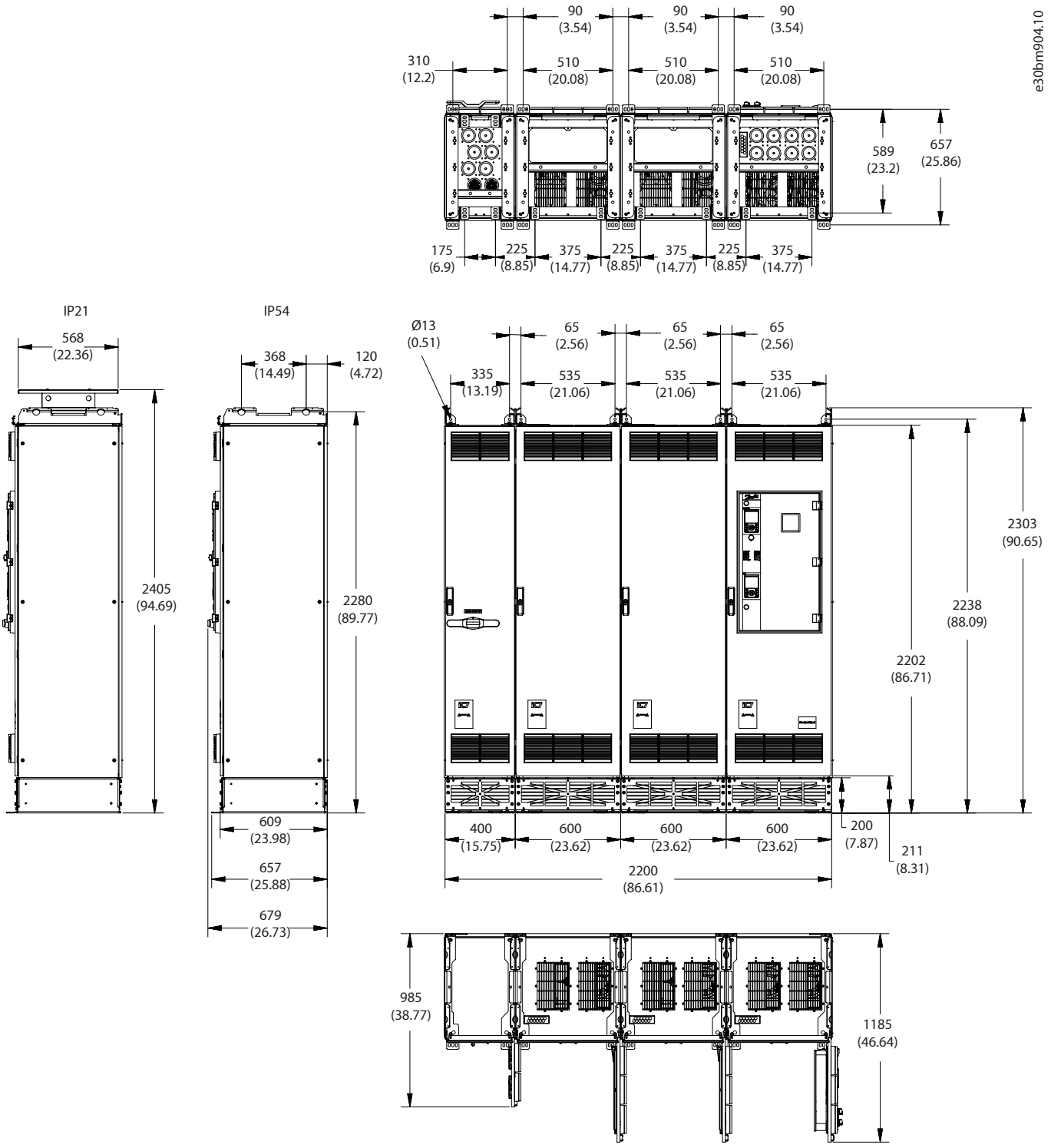

Figure 88: Dimensions for the Bottom Cabling Option, 2 x AE10, 2 x IE10, in mm (in)

Danfoss Drives Oy © 2026.06

9.2.7 Dimensions for the Bottom Cabling Option, 2 x AE11, 2 x IE11

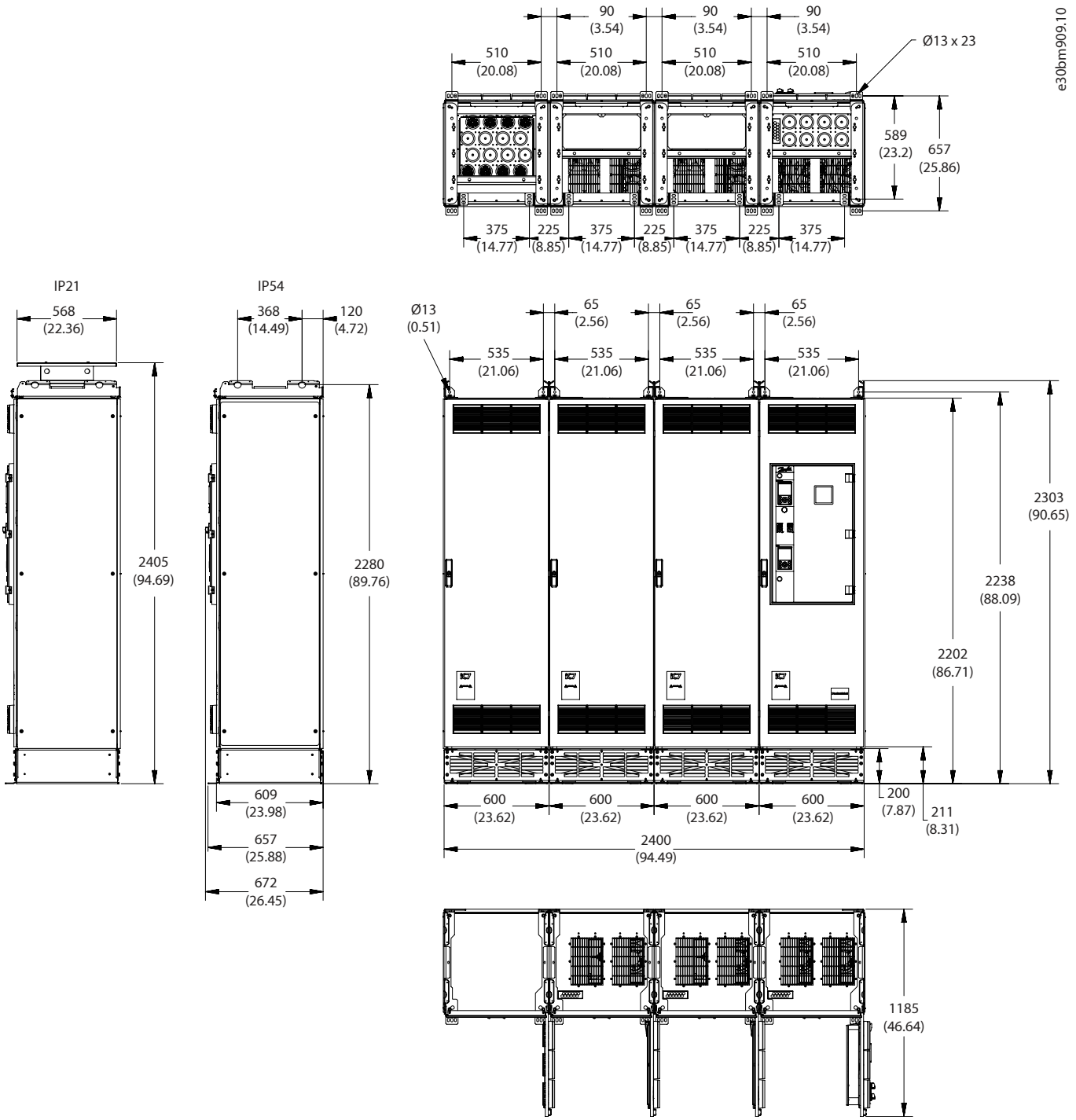

Figure 89: Dimensions for the Bottom Cabling Option, 2 x AE11, 2 x IE11, in mm (in)

9.2.8 Dimensions for the Bottom Cabling Option, 3 x AE11, 3 x IE11

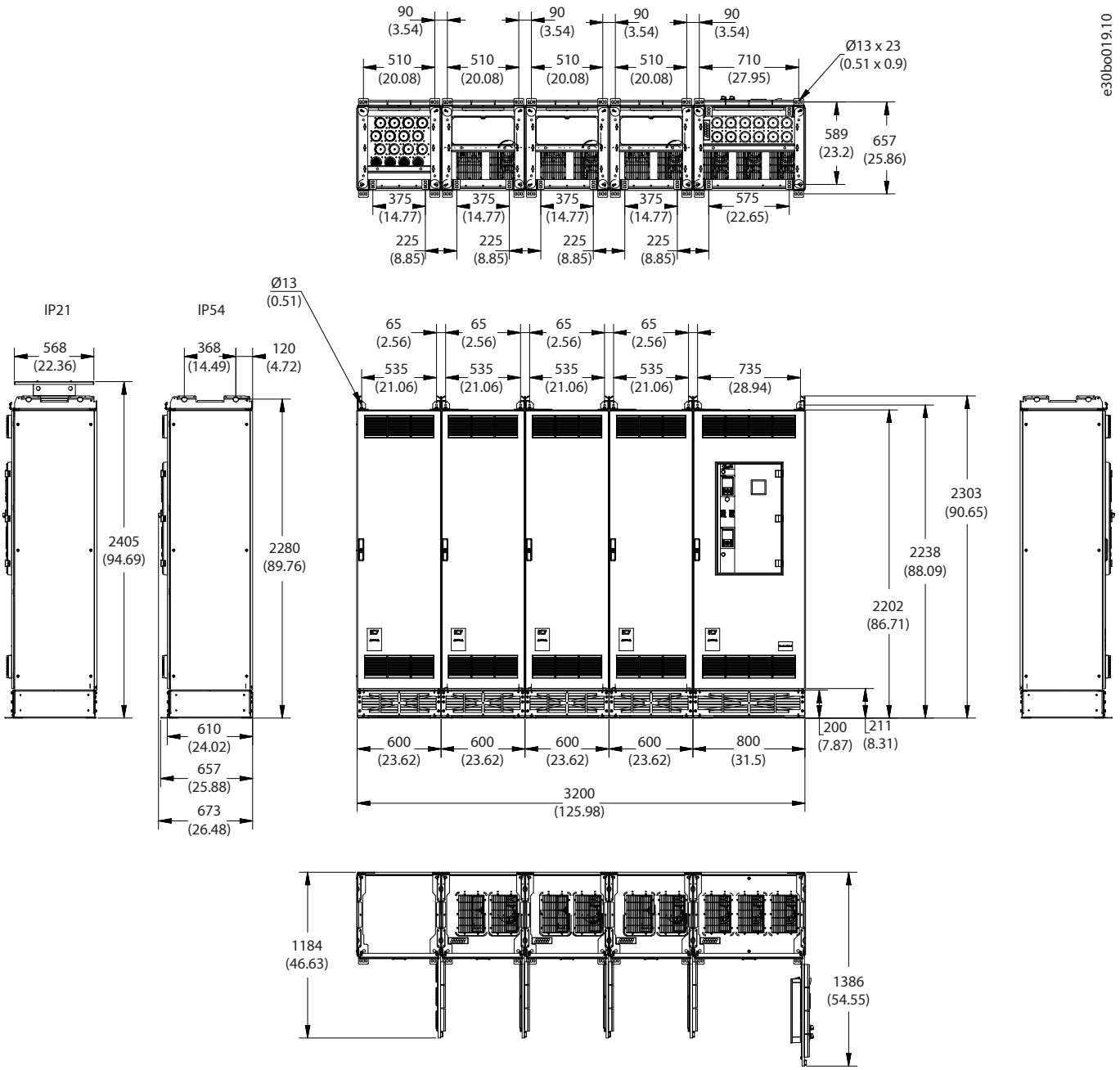

Figure 90: Dimensions for the Bottom Cabling Option, 3 x AE11, 3 x IE11, in mm (in)

Danfoss Drives Oy © 2026.06

9.2.9 Dimensions for the Top Cabling Option, FE9

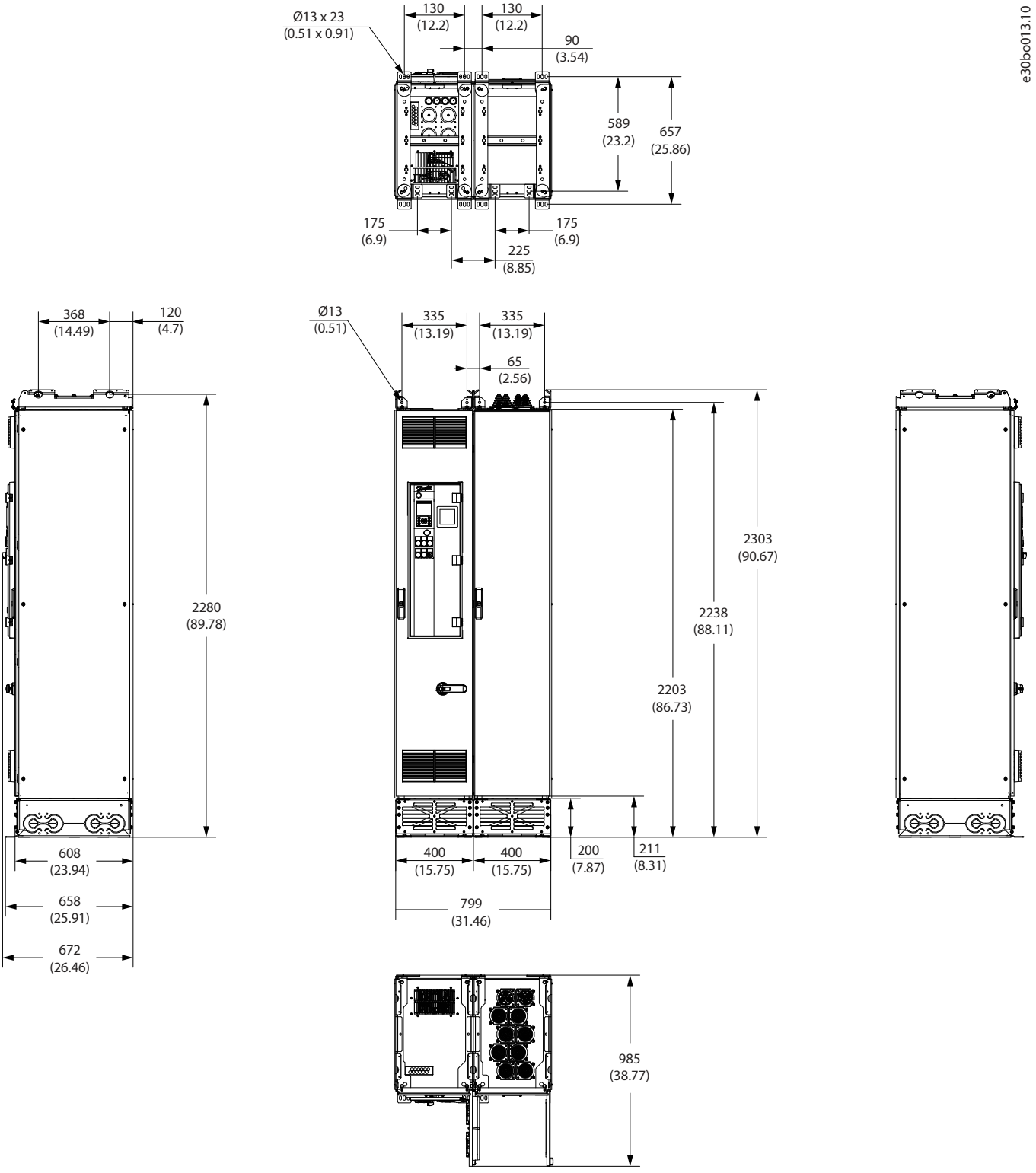

Figure 91: Dimensions for the Top Cabling Option, FE9, in mm (in)

9.2.10 Dimensions for the Top Cabling Option, FE10

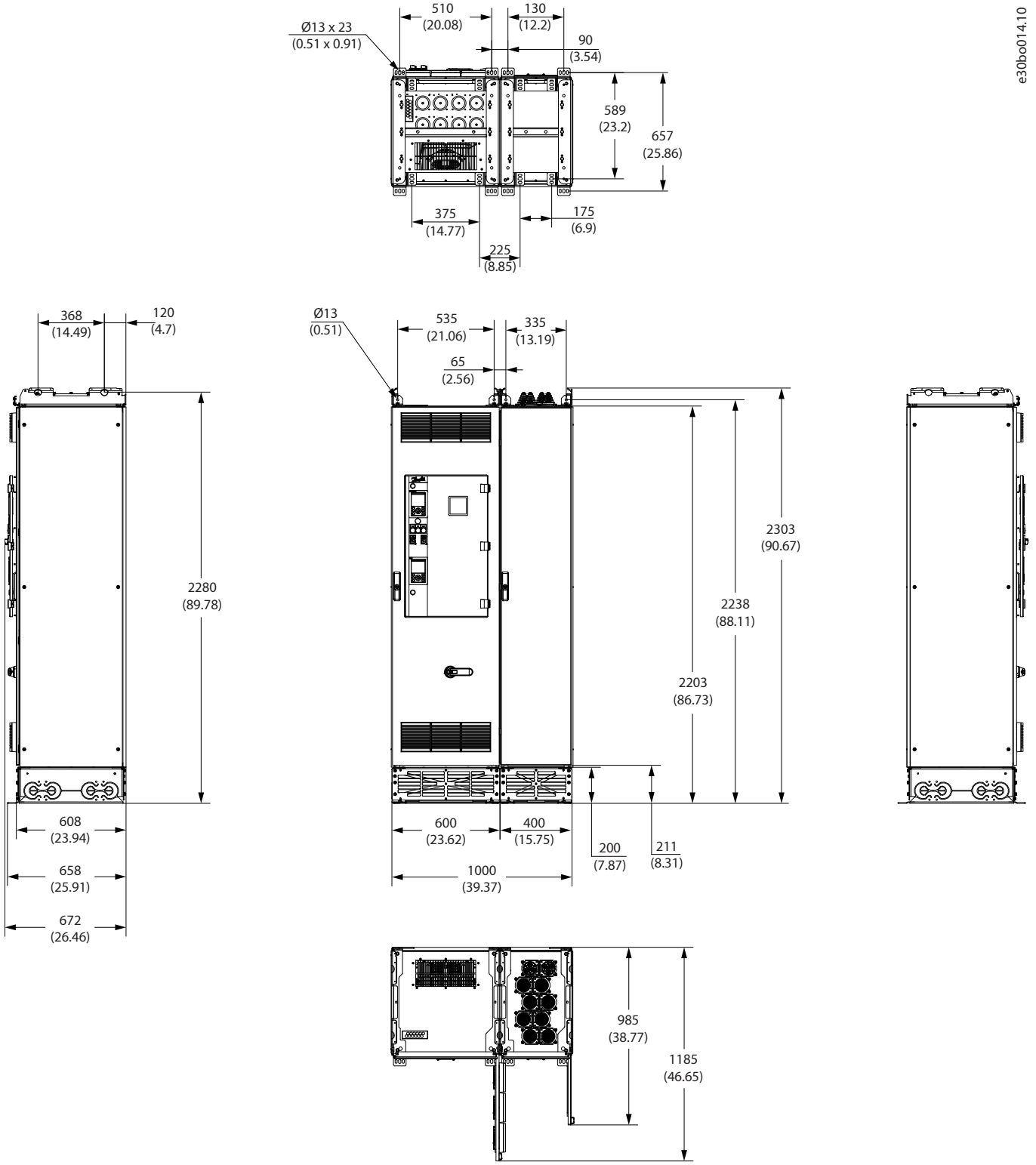

Figure 92: Dimensions for the Top Cabling Option, FE10, in mm (in)

Danfoss Drives Oy © 2026.06

9.2.11 Dimensions for the Top Cabling Option, AE10, IE10

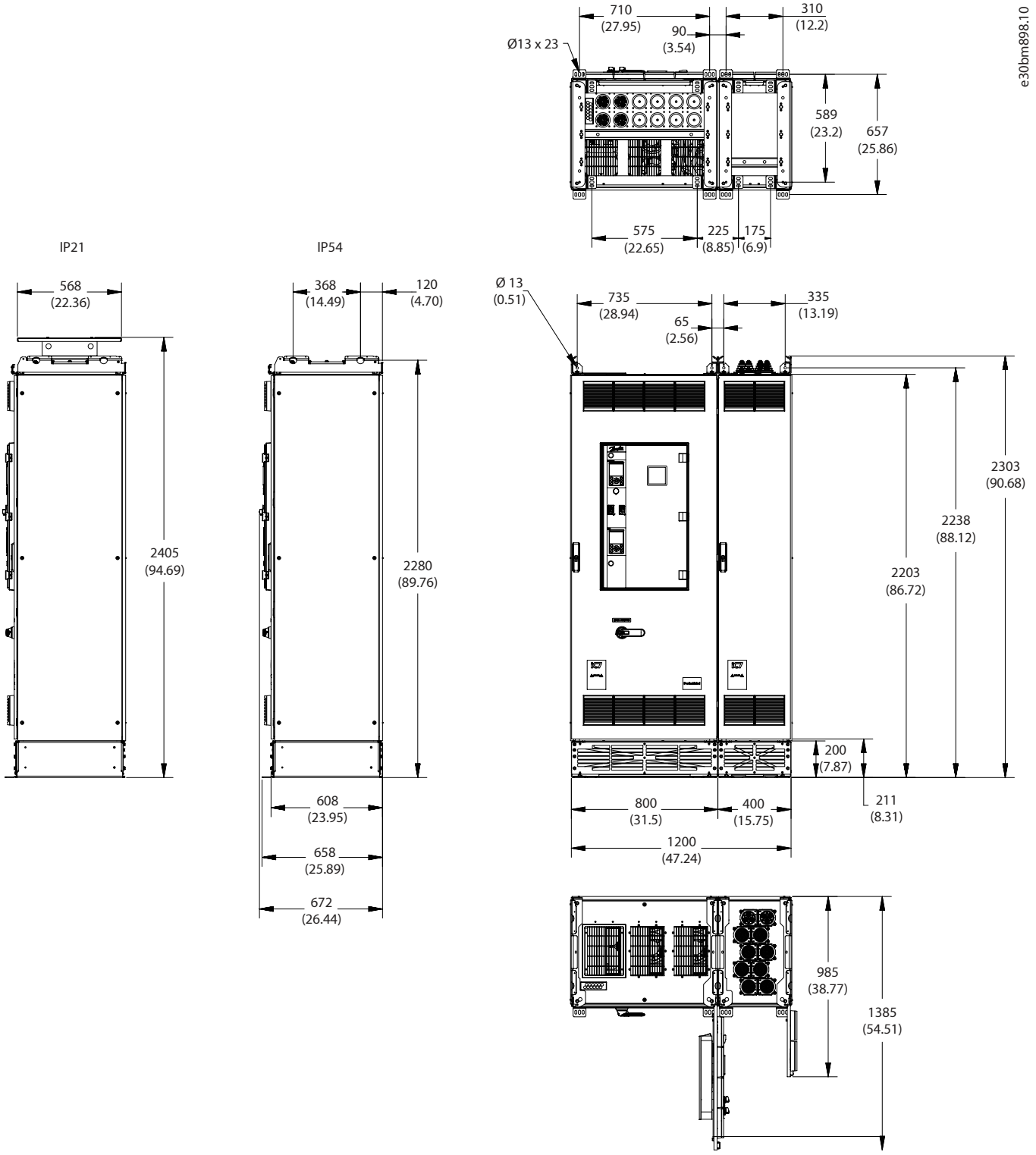

Figure 93: Dimensions for the Top Cabling Option, AE10, IE10, in mm (in)

9.2.12 Dimensions for the Top Cabling Option, AE11, IE11

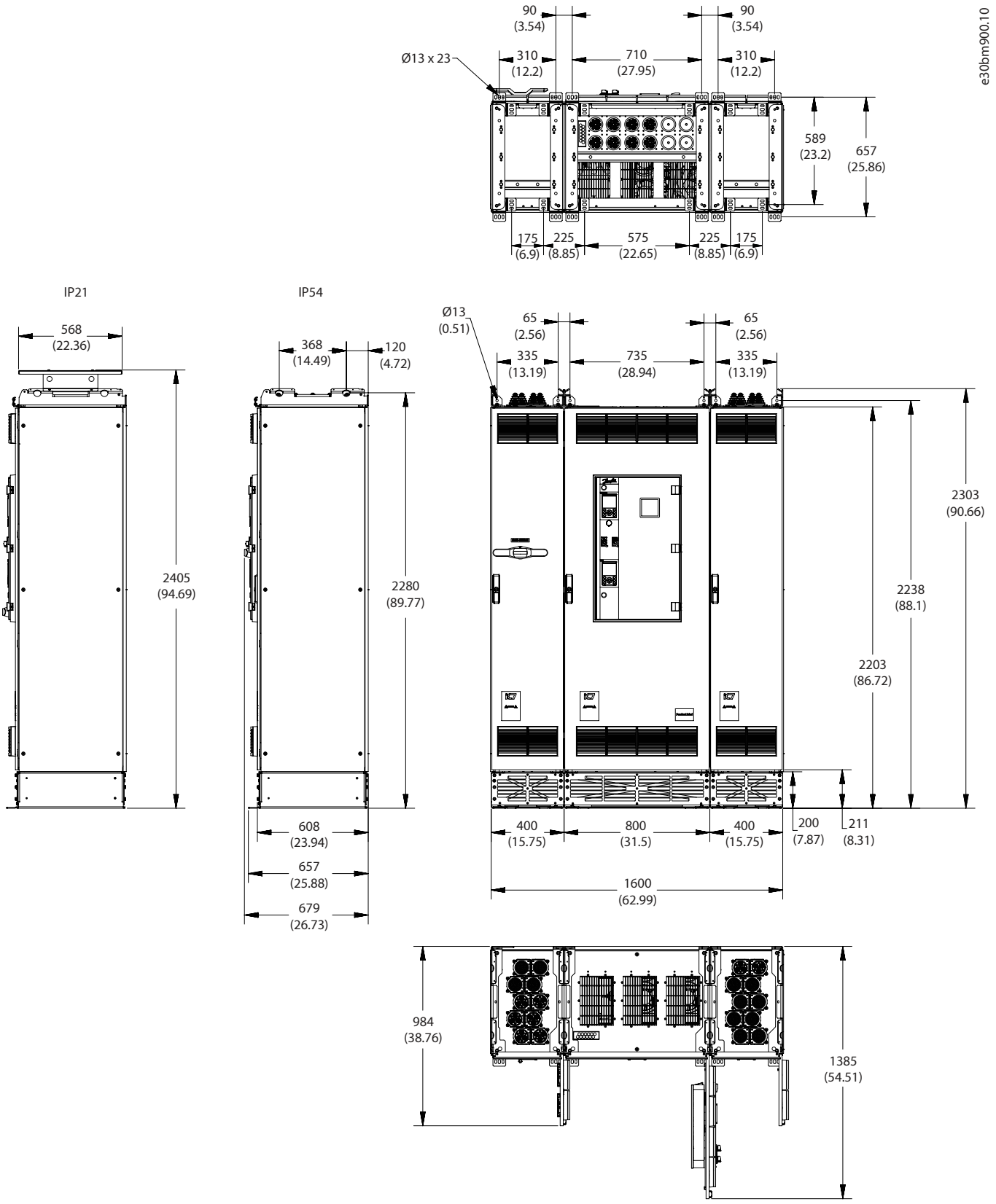

Figure 94: Dimensions for the Top Cabling Option, AE11, IE11, in mm (in)

Danfoss Drives Oy © 2026.06

9.2.13 Dimensions for the Top Cabling Option, 2 x AE10, 2 x IE10

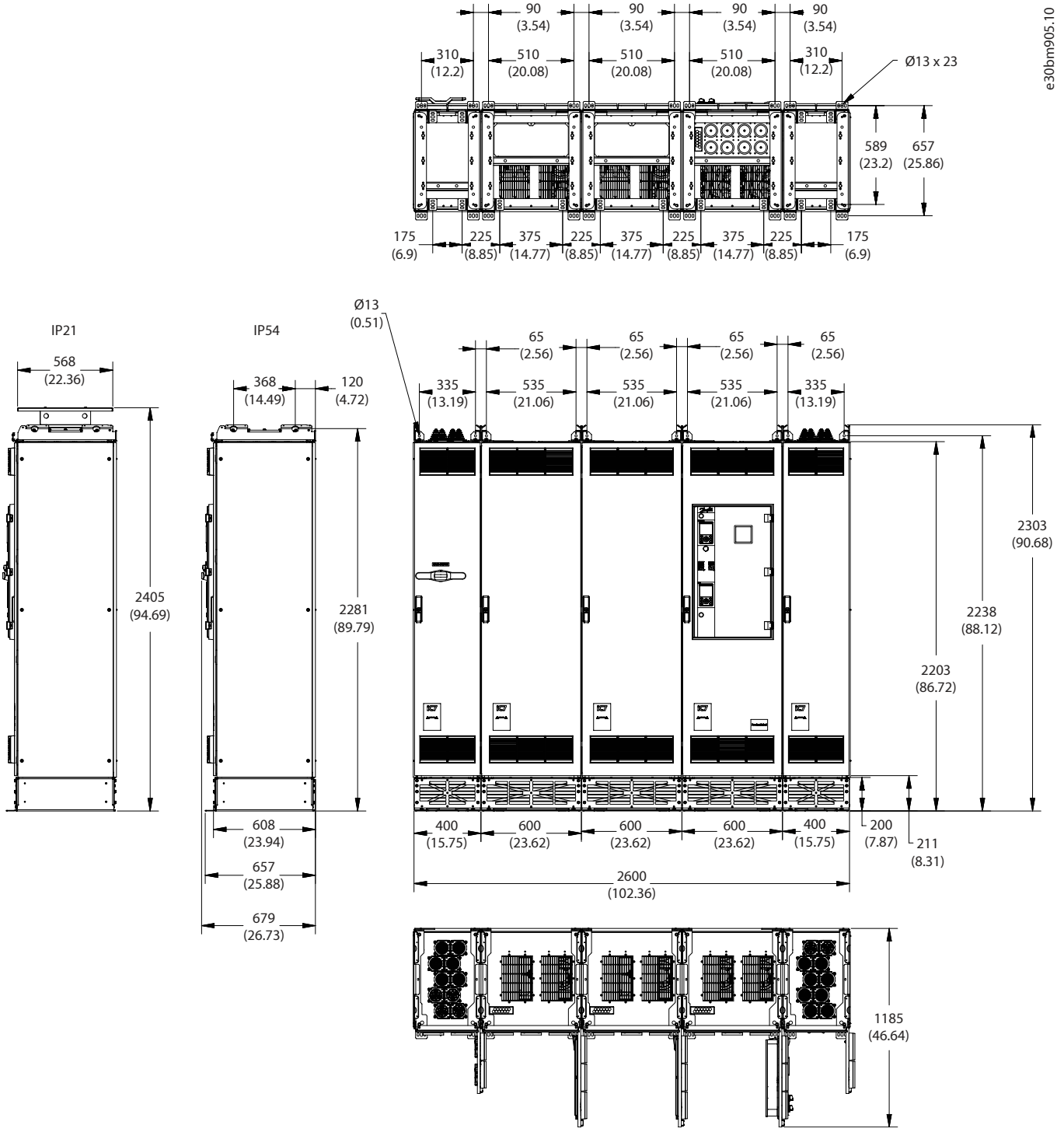

Figure 95: Dimensions for the Top Cabling Option, 2 x AE10, 2 x IE10, in mm (in)

9.2.14 Dimensions for the Top Cabling Option, 2 x AE11, 2 x IE11

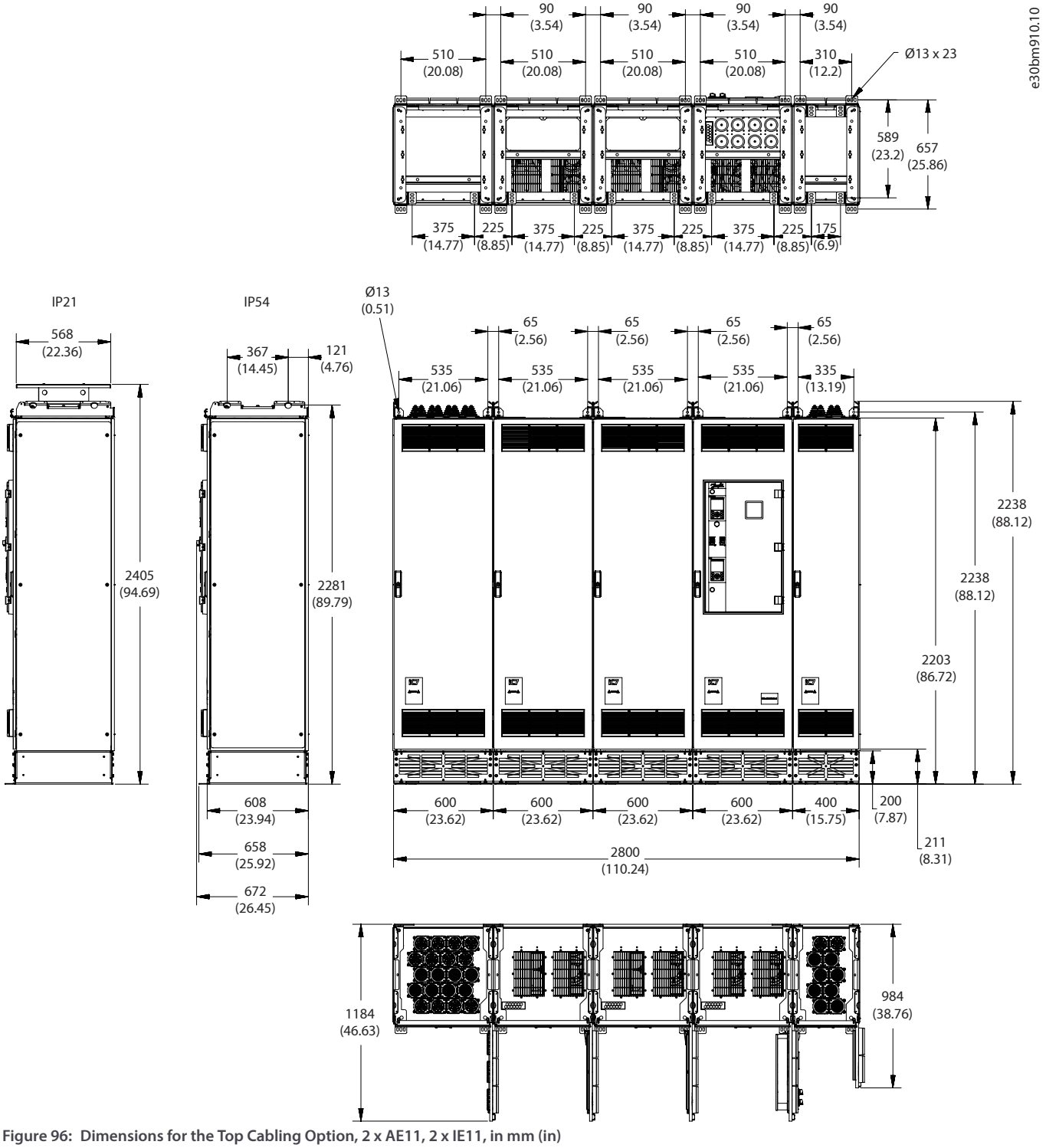

Figure 96: Dimensions for the Top Cabling Option, 2 x AE11, 2 x IE11, in mm (in)

Danfoss Drives Oy © 2026.06

9.2.15 Dimensions for the Top Cabling Option, 3 x AE11, 3 x IE11

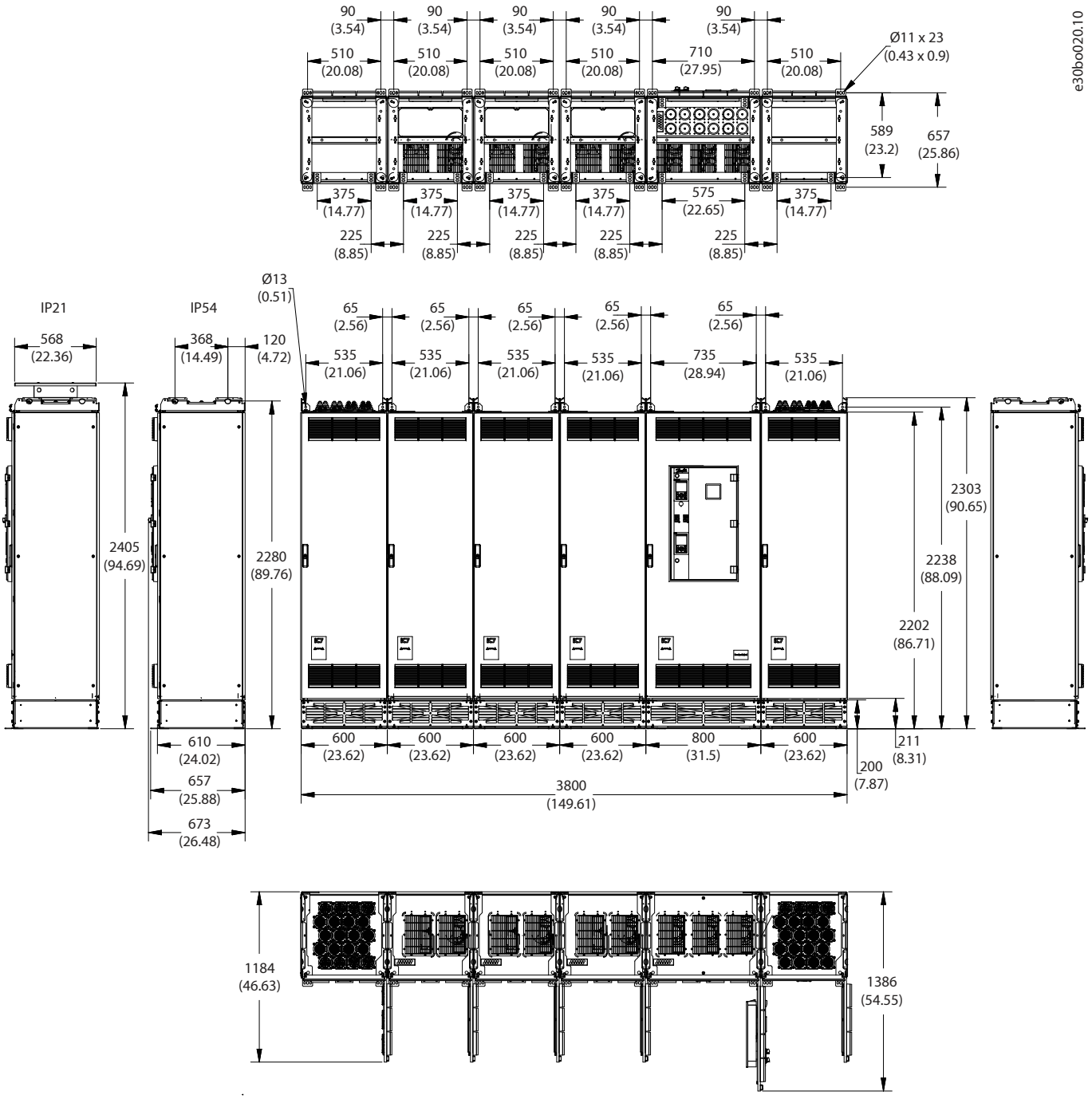

Figure 97: Dimensions for the Top Cabling Option, 3 x AE11, 3 x IE11, in mm (in)

9.2.16 Dimensions for Default Cooling, FE9

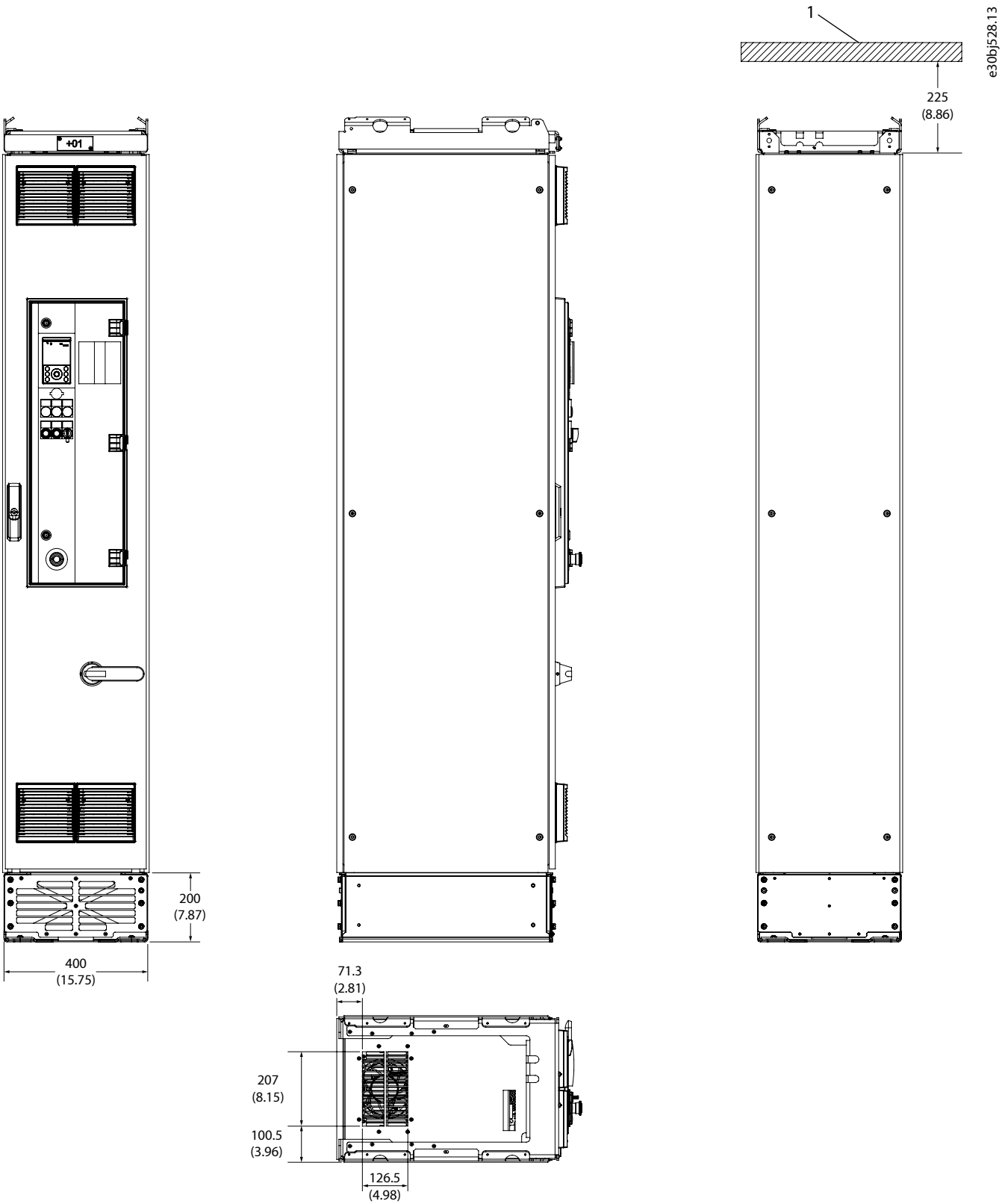

Figure 98: Dimensions for Default Cooling, FE9, in mm (in)

1	Roof

Danfoss Drives Oy © 2026.06

9.2.17 Dimensions for Default Cooling, FE10

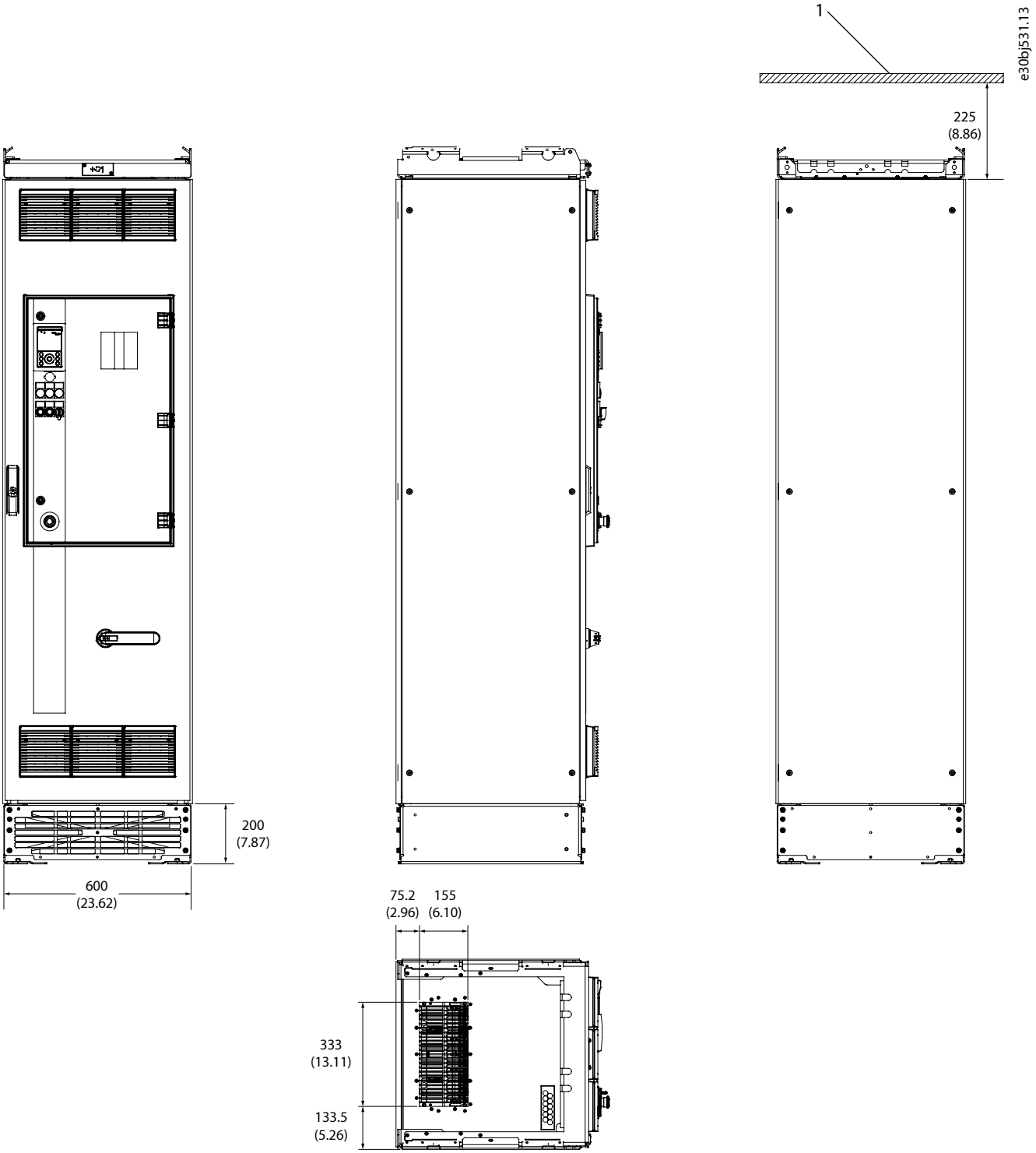

Figure 99: Dimensions for Default Cooling, FE10, in mm (in)

1	Roof

9.2.18 Dimensions for Default Cooling, AE10, IE10

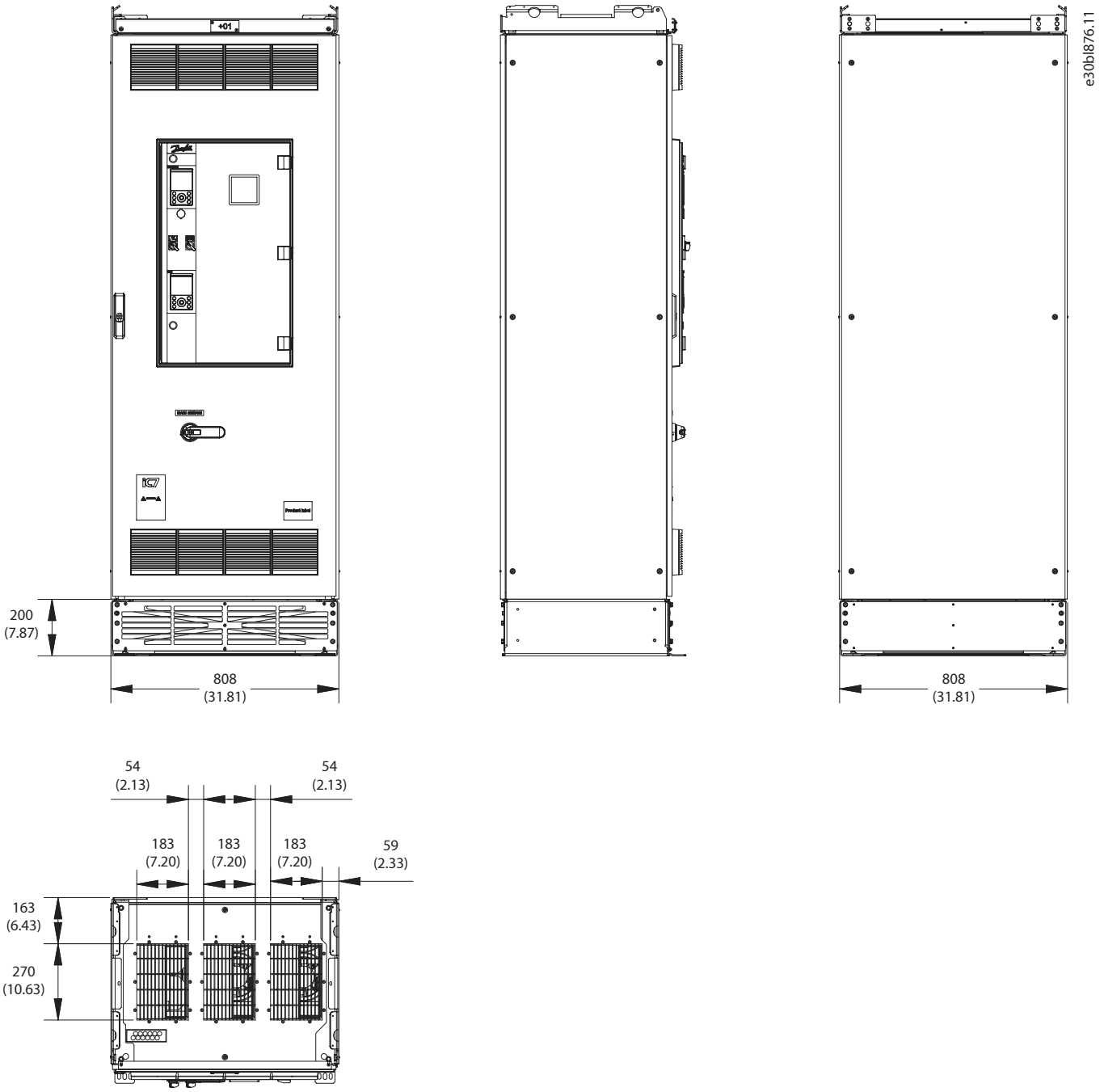

Figure 100: Dimensions for Default Cooling, AE10, IE10, in mm (in)

Danfoss Drives Oy © 2026.06

9.2.19 Dimensions for Default Cooling, AE11, IE11

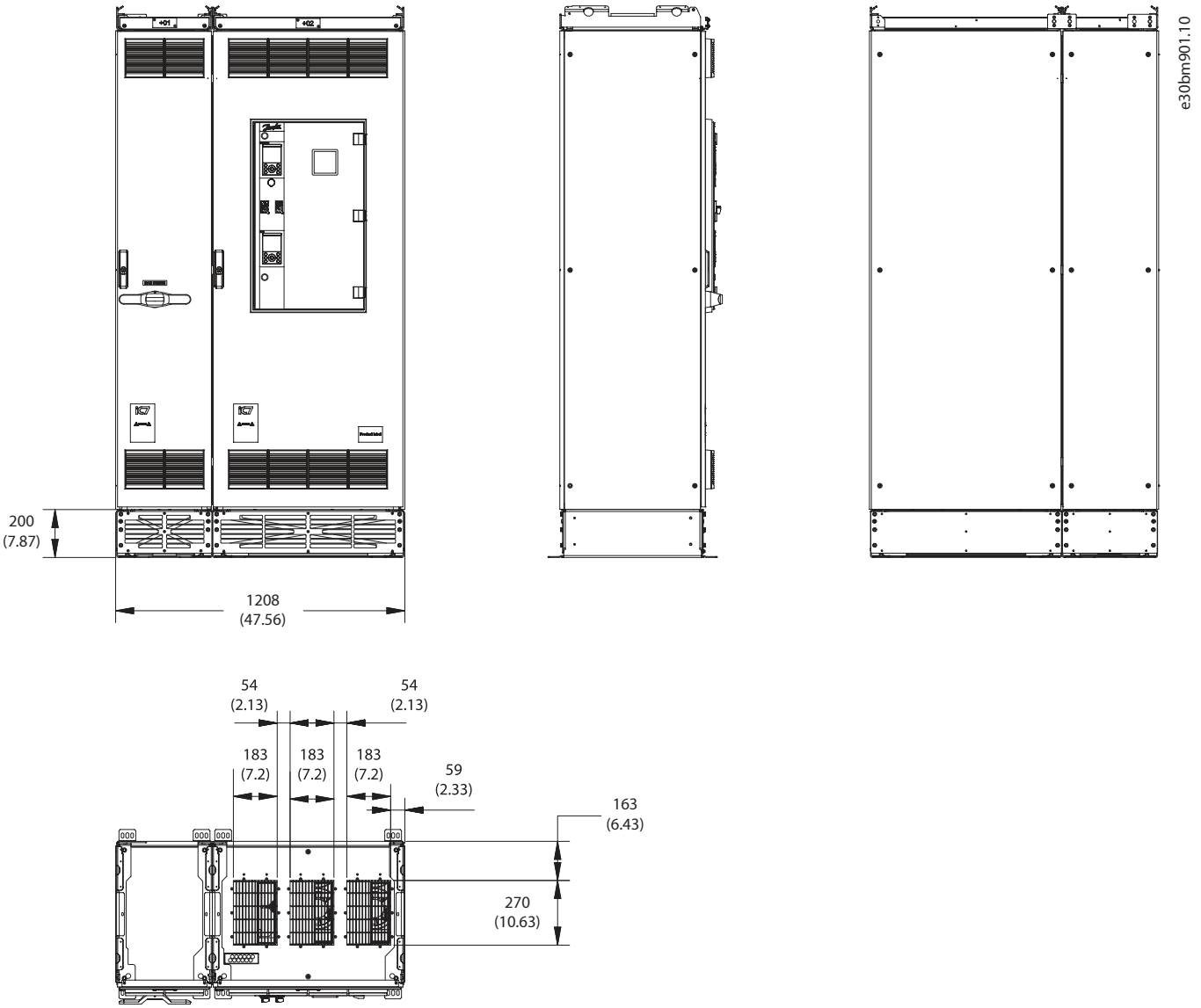

Figure 101: Dimensions for Default Cooling, AE11, IE11, in mm (in)

9.2.20 Dimensions for Default Cooling, 2 x AE10, 2 x IE10

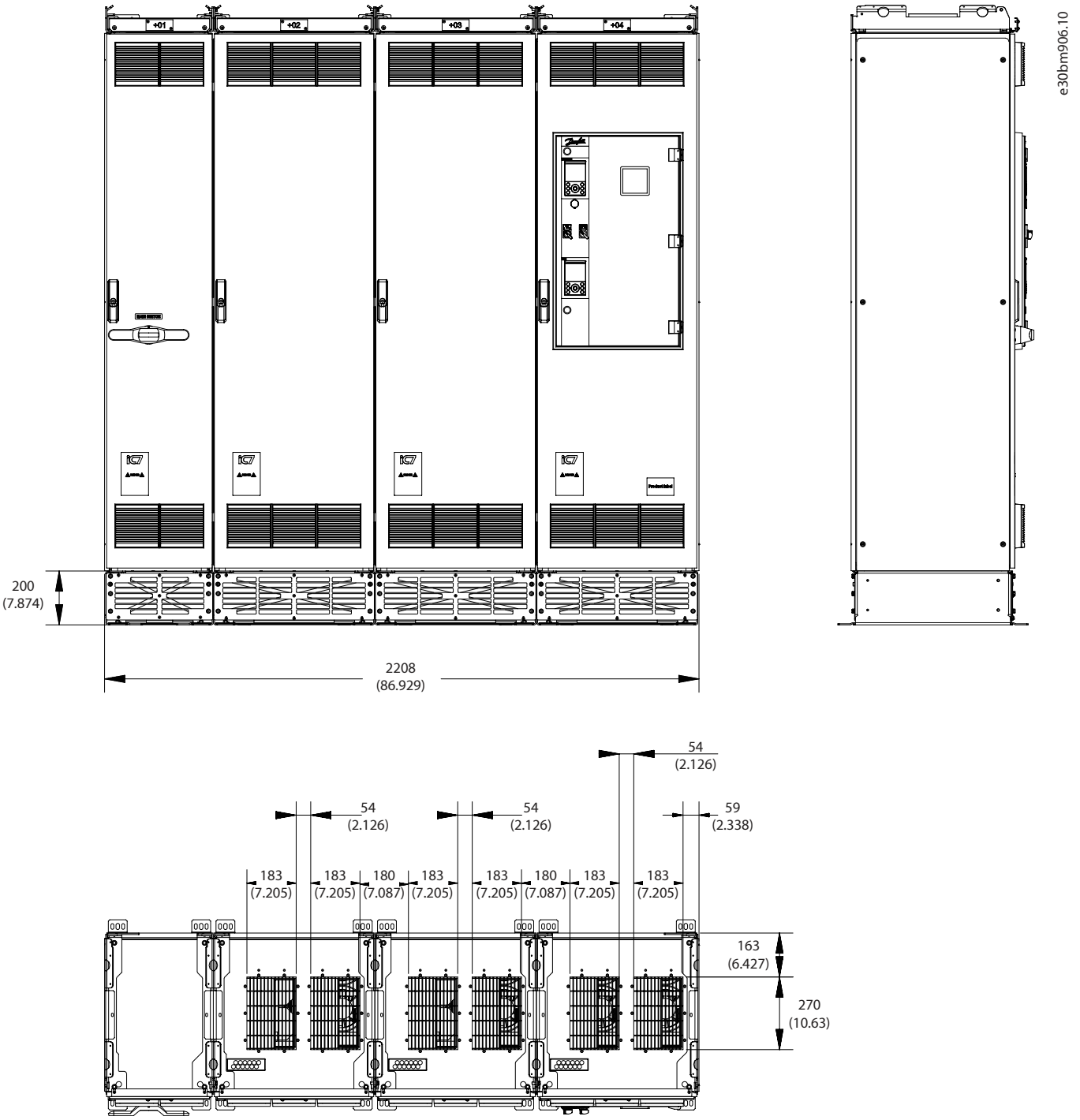

Figure 102: Dimensions for Default Cooling, 2 x AE10, 2 x IE10, in mm (in)

Danfoss Drives Oy © 2026.06

9.2.21 Dimensions for Default Cooling, 2 x AE11, 2 x IE11

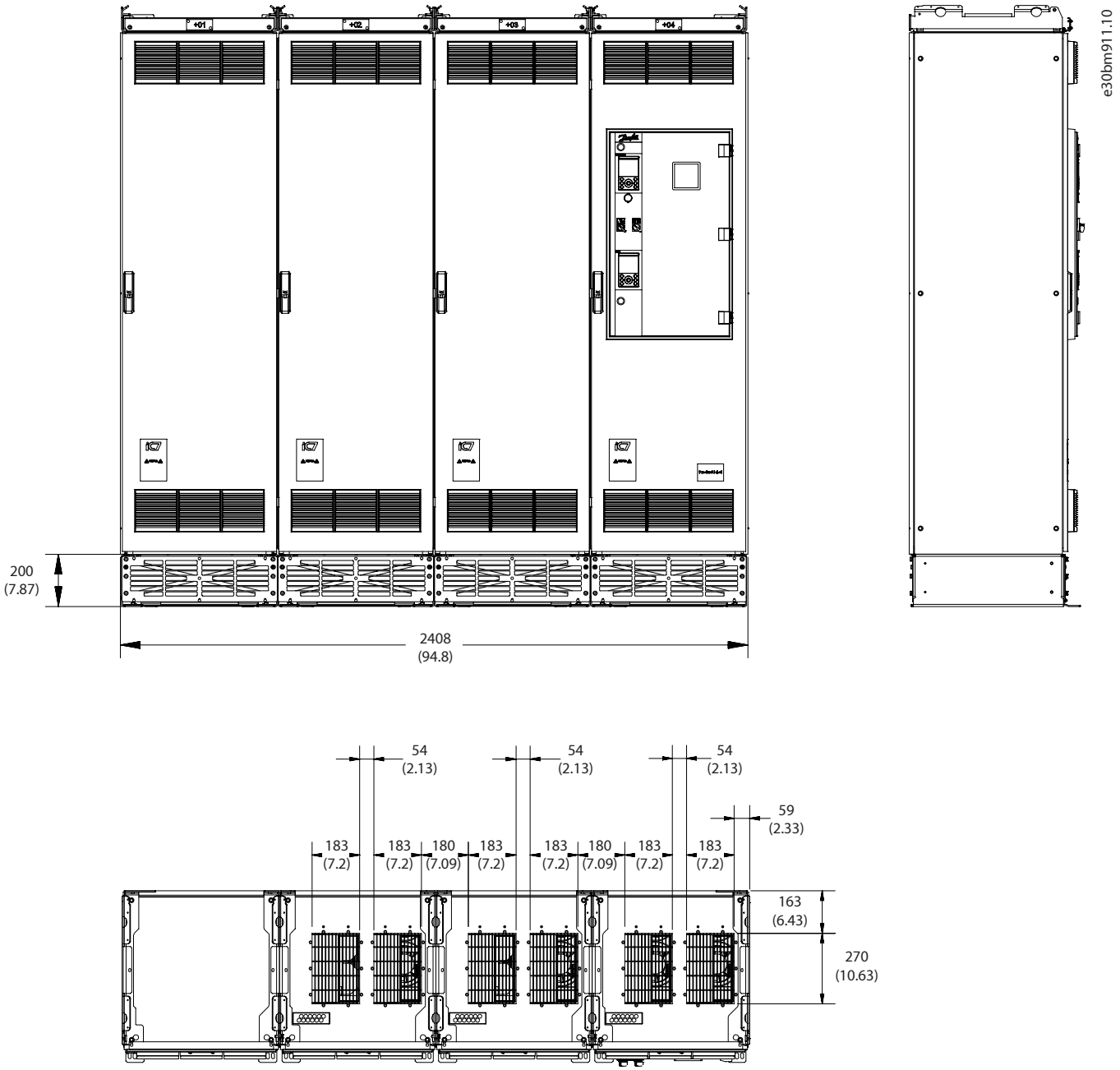

Figure 103: Dimensions for Default Cooling, 2 x AE11, 2 x IE11, in mm (in)

9.2.22 Dimensions for Default Cooling, 3 x AE11, 3 x IE11

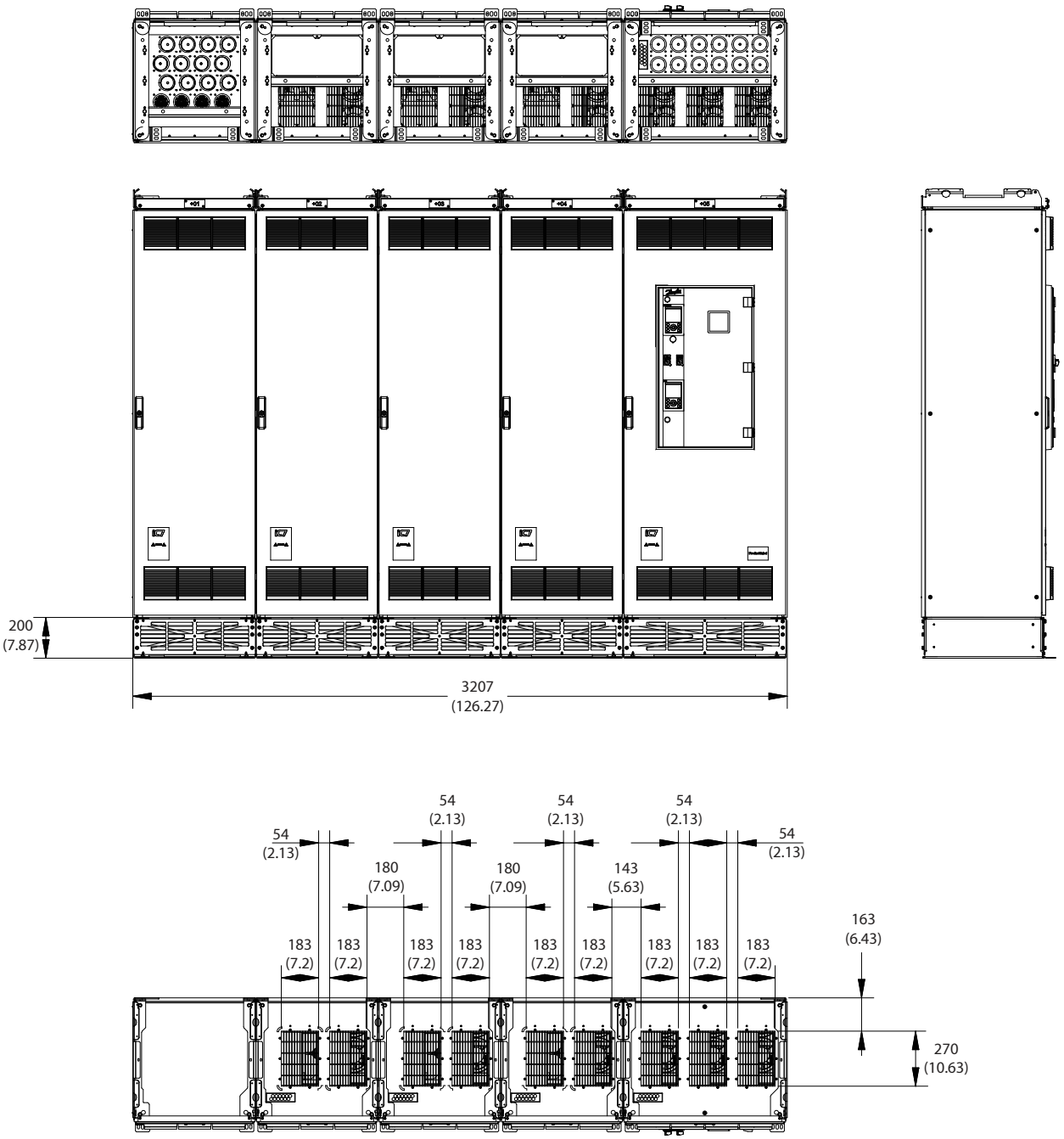

Figure 104: Dimensions for Default Cooling, 3 x AE11, 3 x IE11, in mm (in)

Danfoss Drives Oy © 2026.06

9.2.23 Dimensions for Back-channel Cooling Option, FE9

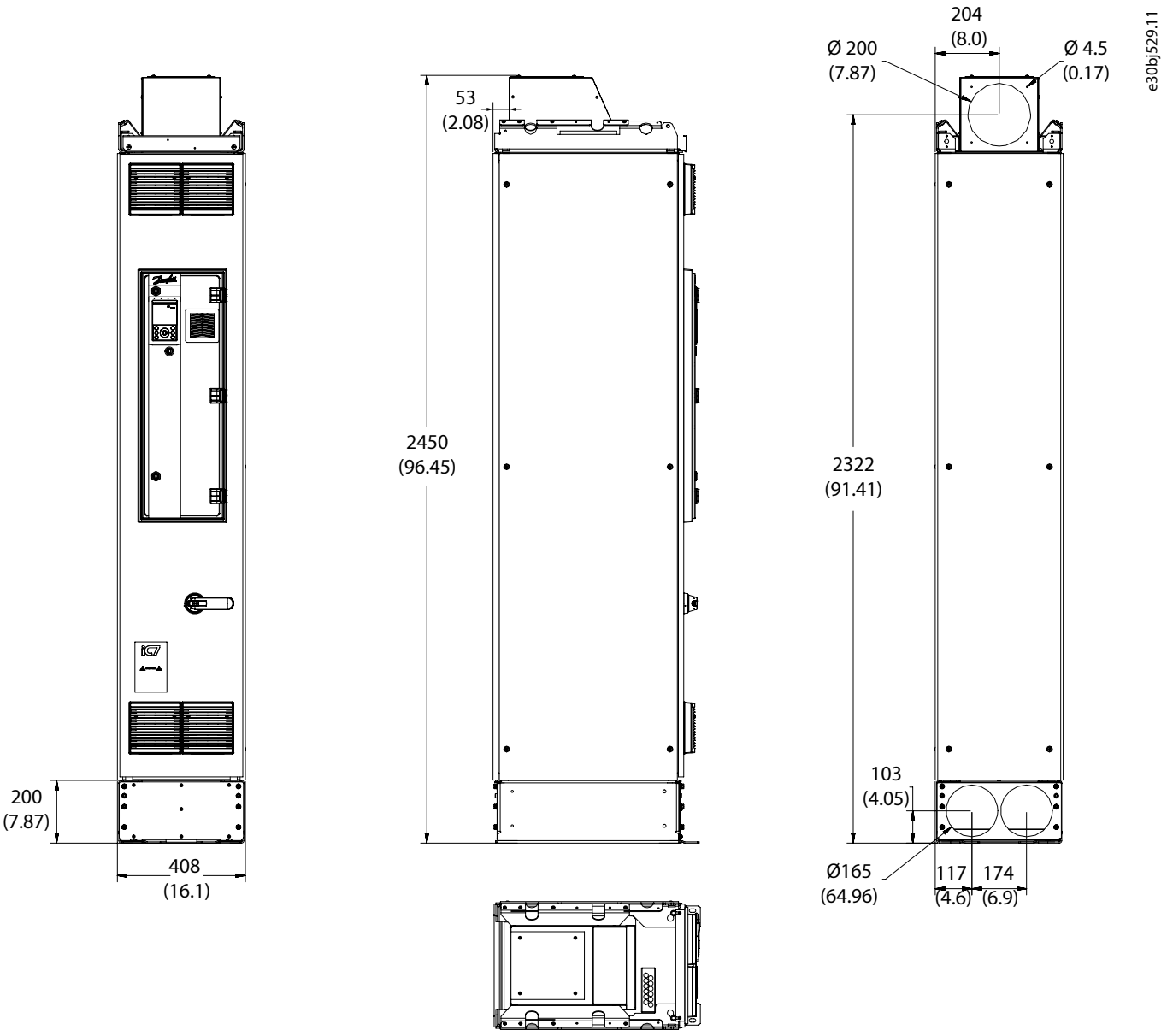

Figure 105: Dimensions for Back-channel Cooling (+OABC), FE9, in mm (in)

The exhaust air can also be directed upwards. See 9.2.30 Dimensions for the Cooling Air Output Flange Option, FE9.

9.2.24 Dimensions for Back-channel Cooling Option, FE10

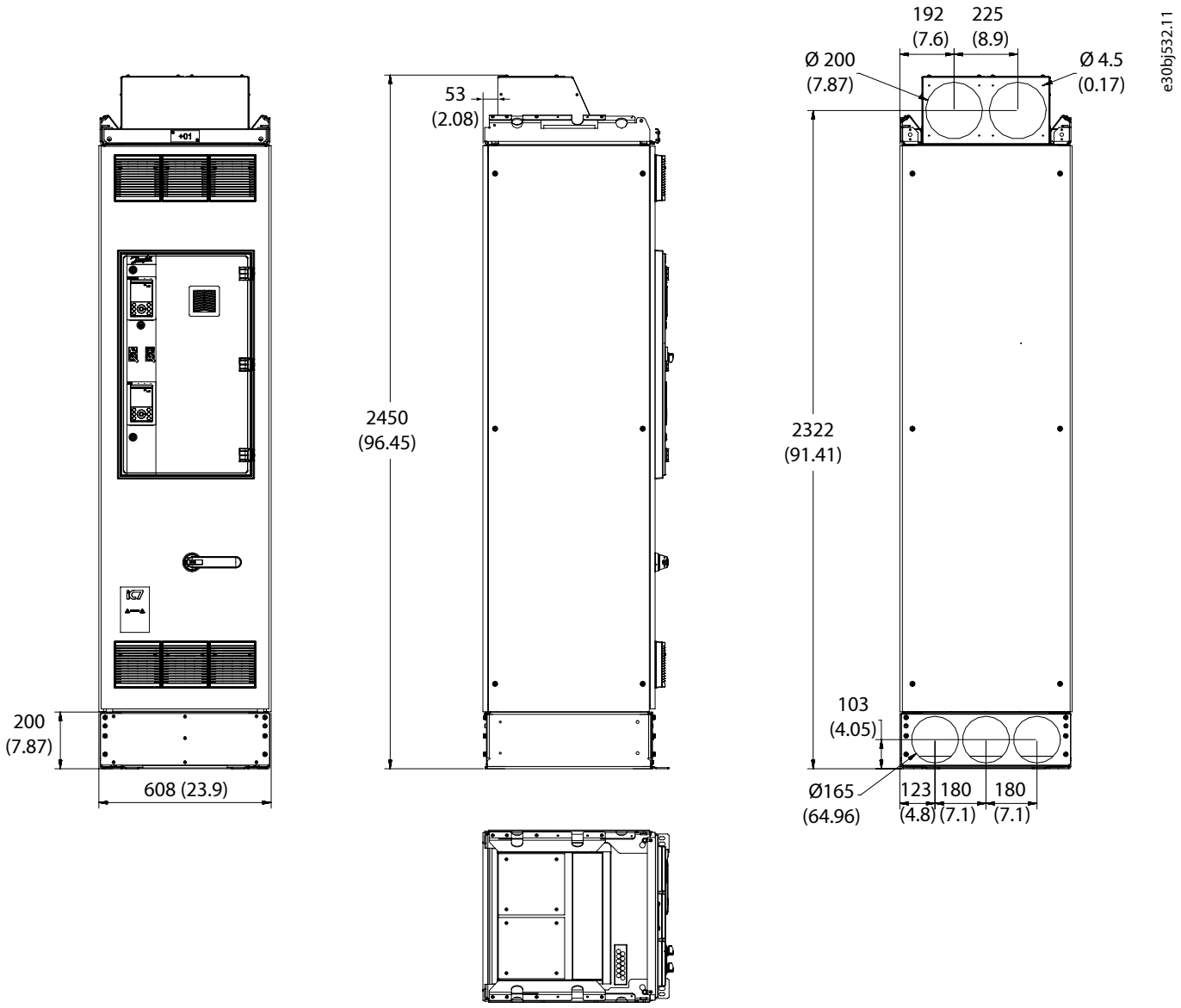

Figure 106: Dimensions for Back-channel Cooling (+OABC), FE10, in mm (in)

The exhaust air can also be directed upwards. See 9.2.31 Dimensions for the Cooling Air Output Flange Option, FE10.

Danfoss Drives Oy © 2026.06

9.2.25 Dimensions for Back-channel Cooling Option, AE10, IE10

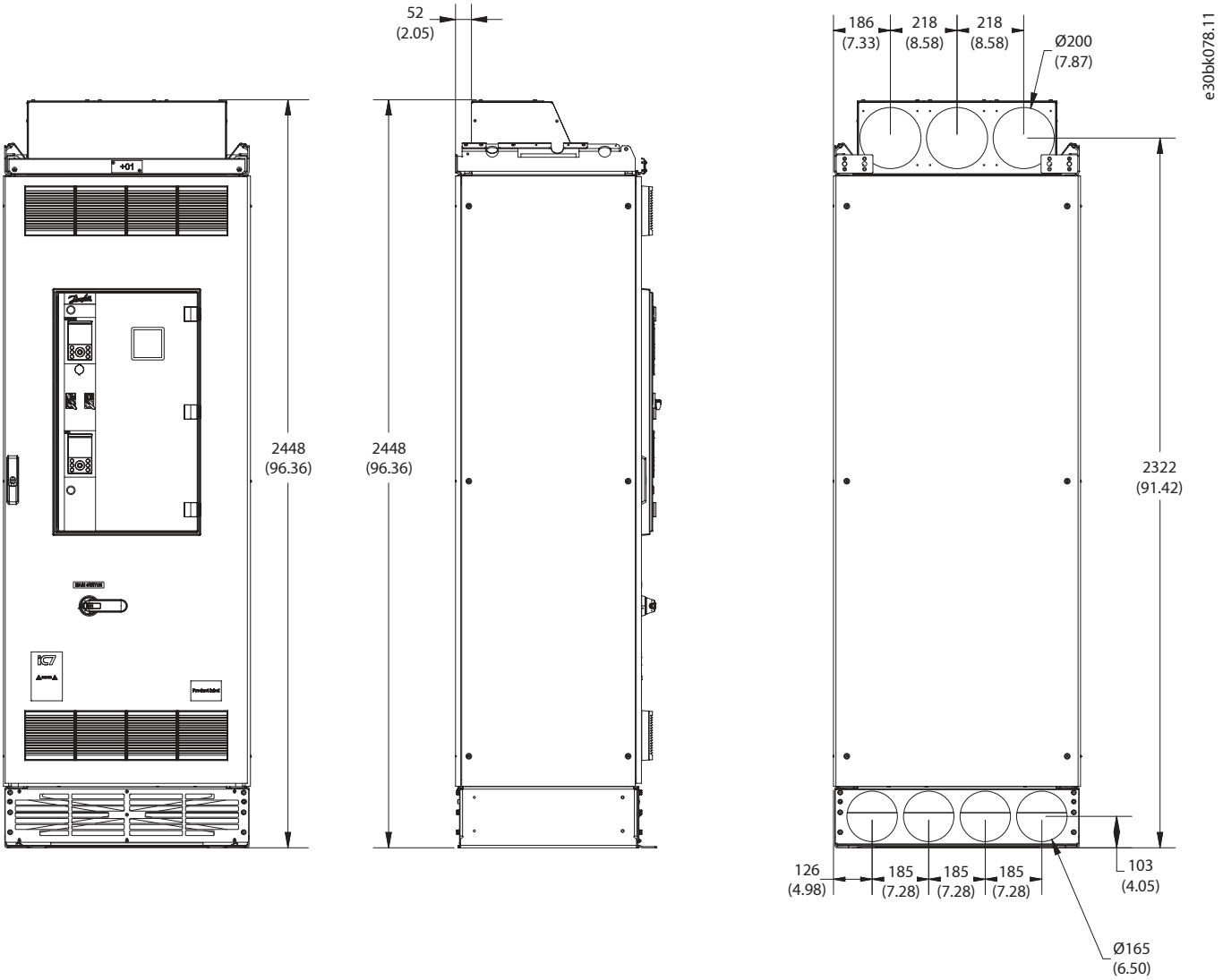

Figure 107: Dimensions for Back-channel Cooling (+OABC), AE10, IE10, in mm (in)

The exhaust air can also be directed upwards. See 9.2.32 Dimensions for the Cooling Air Output Flange Option, AE10, IE10.

9.2.26 Dimensions for Back-channel Cooling Option, AE11, IE11

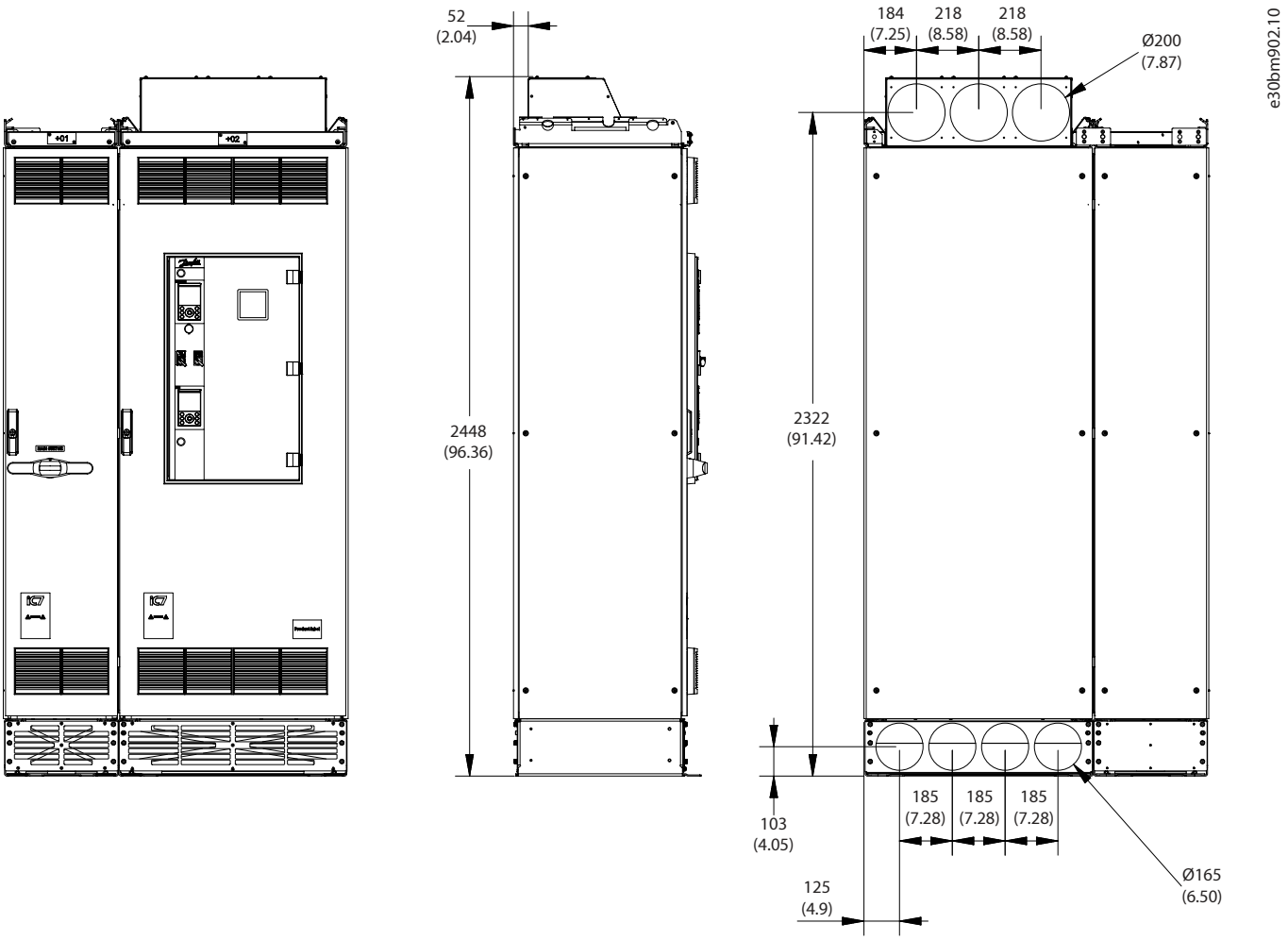

Figure 108: Dimensions for Back-channel Cooling (+OABC), AE11, IE11, in mm (in)

The exhaust air can also be directed upwards. See 9.2.33 Dimensions for the Cooling Air Output Flange Option, AE11, IE11.

Danfoss Drives Oy © 2026.06

9.2.27 Dimensions for Back-channel Cooling Option, 2 x AE10, 2 x IE10

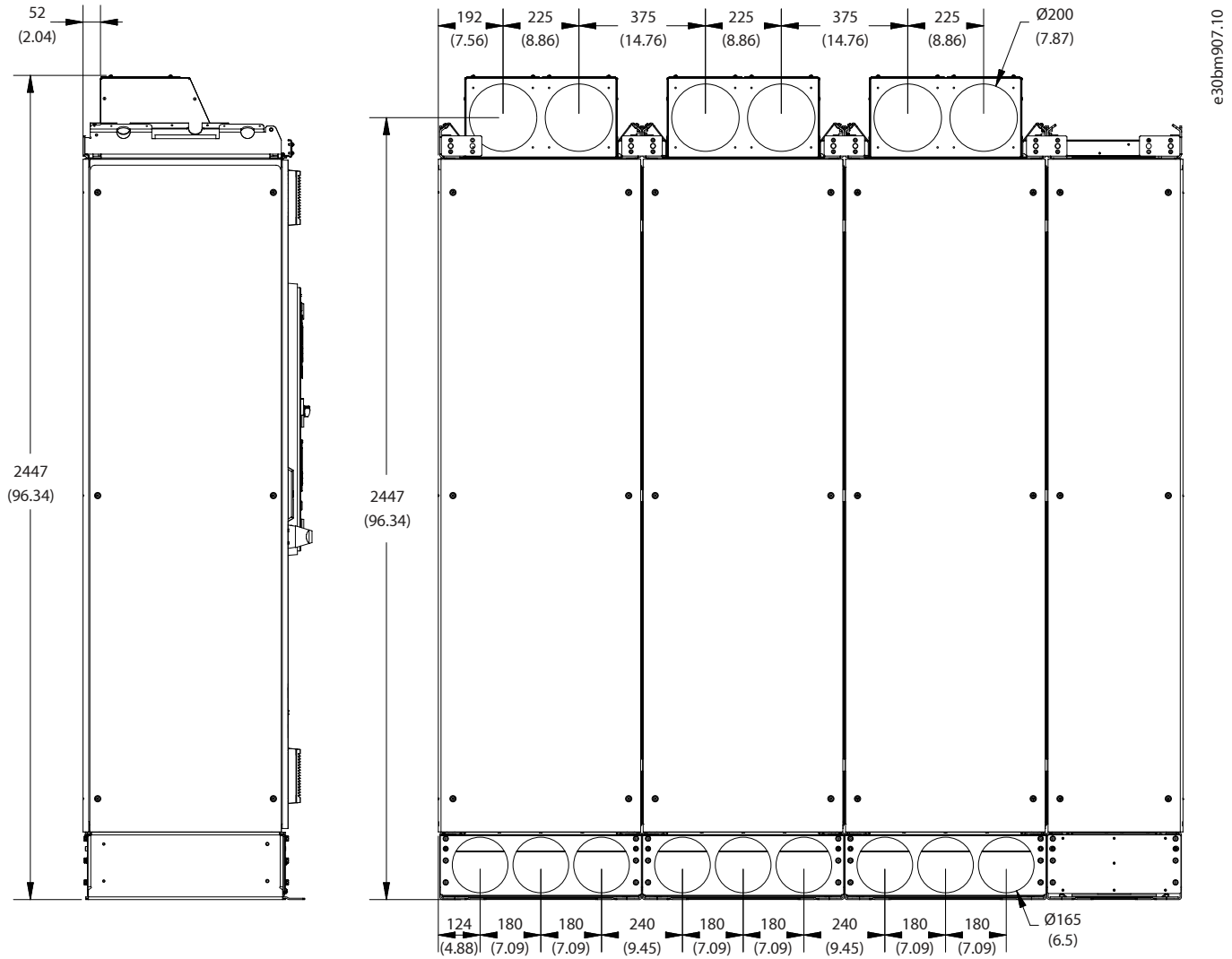

Figure 109: Dimensions for Back-channel Cooling (+OABC), 2 x AE10, 2 x IE10, in mm (in)

The exhaust air can also be directed upwards. See 9.2.34 Dimensions for the Cooling Air Output Flange Option, 2 x AE10, 2 x IE10.

9.2.28 Dimensions for Back-channel Cooling Option, 2 x AE11, 2 x IE11

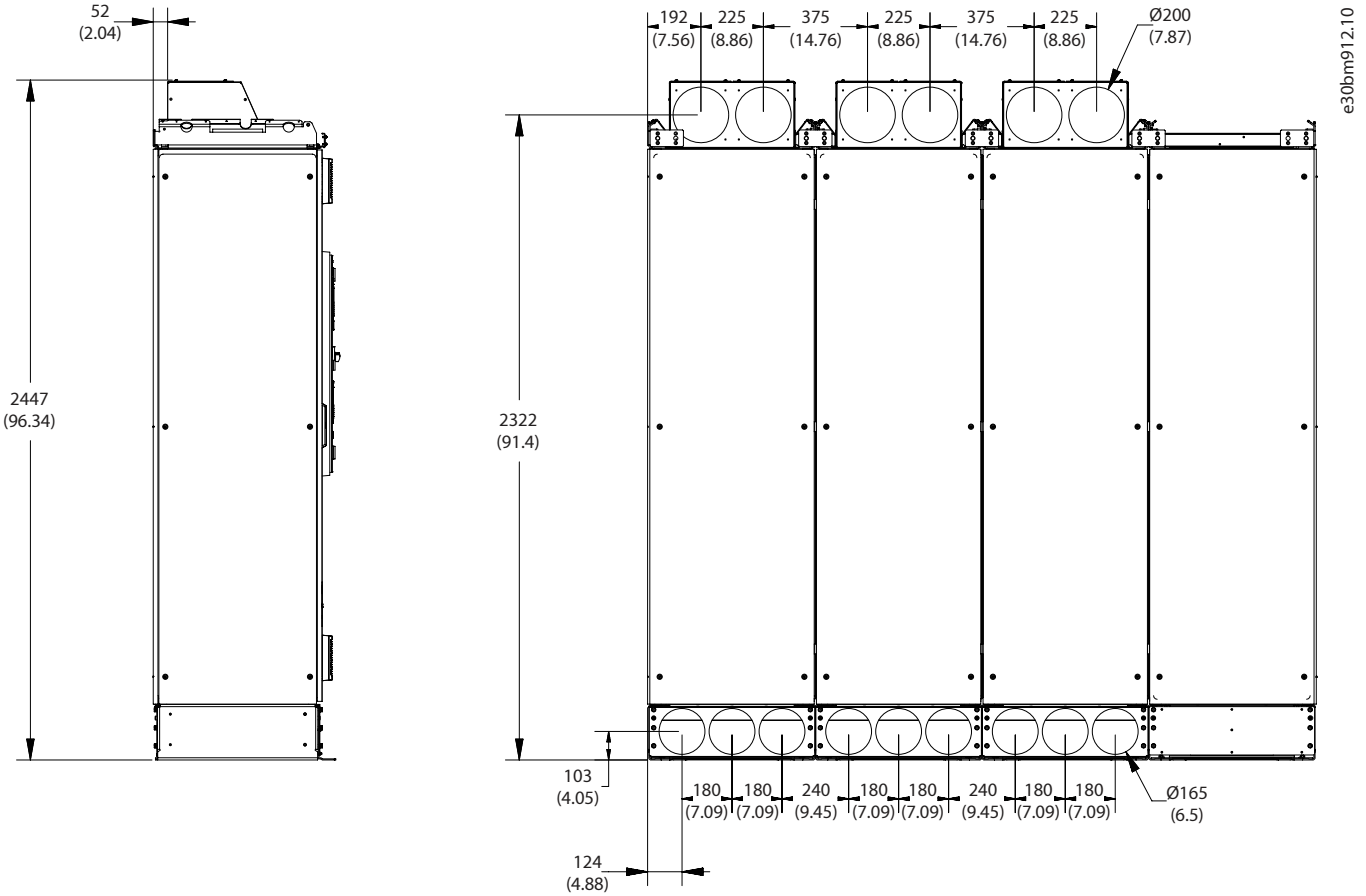

Figure 110: Dimensions for Back-channel Cooling (+OABC), 2 x AE11, 2 x IE11, in mm (in)

The exhaust air can also be directed upwards. See 9.2.35 Dimensions for the Cooling Air Output Flange Option, 2 x AE11, 2 x IE11.

Danfoss Drives Oy © 2026.06

9.2.29 Dimensions for Back-channel Cooling Option, 3 x AE11, 3 x IE11

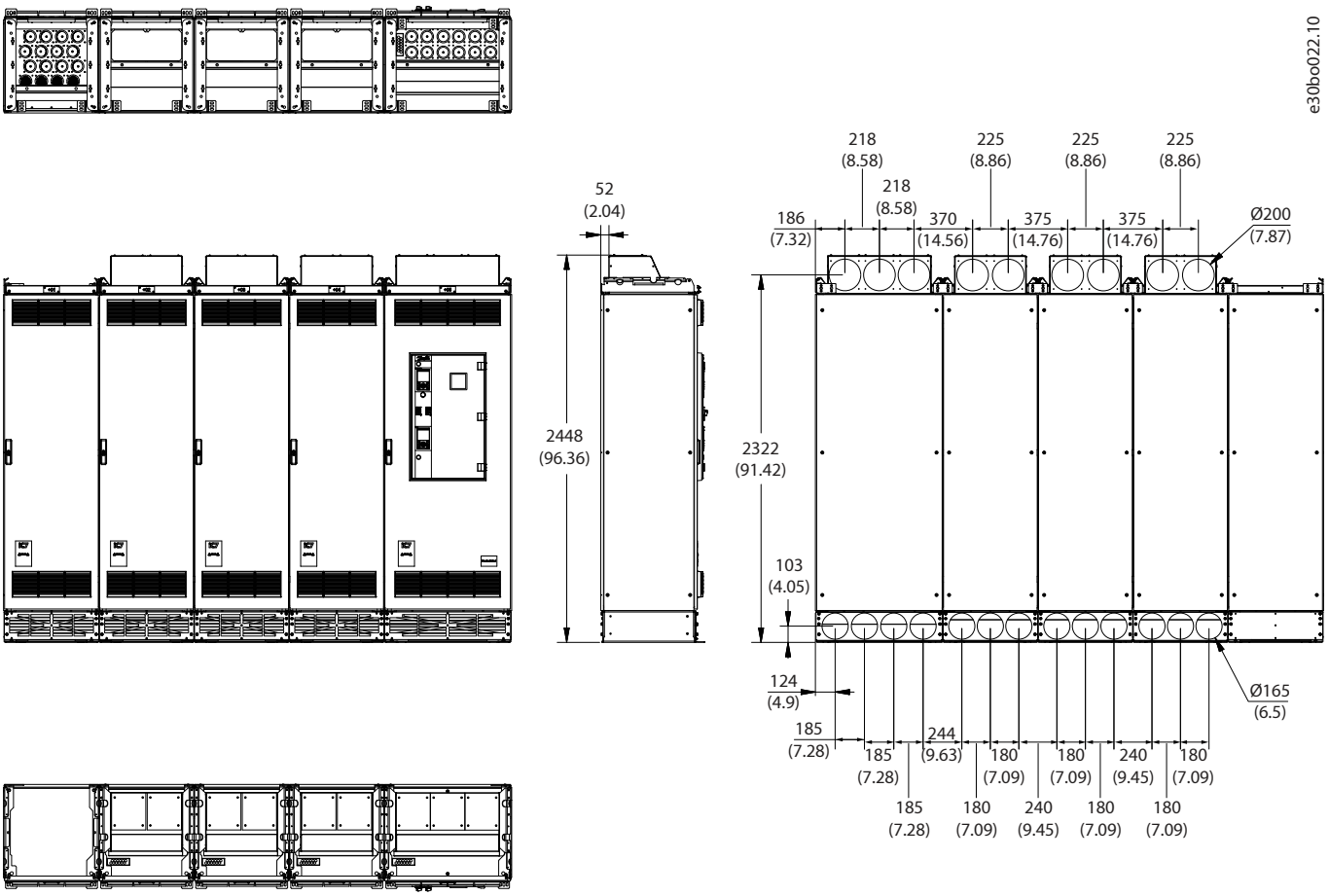

Figure 111: Dimensions for Back-channel Cooling (+OABC), 3 x AE11, 3 x IE11, in mm (in)

The exhaust air can also be directed upwards. See 9.2.36 Dimensions for the Cooling Air Output Flange Option, 3 x AE11, 3 x IE11.

9.2.30 Dimensions for the Cooling Air Output Flange Option, FE9

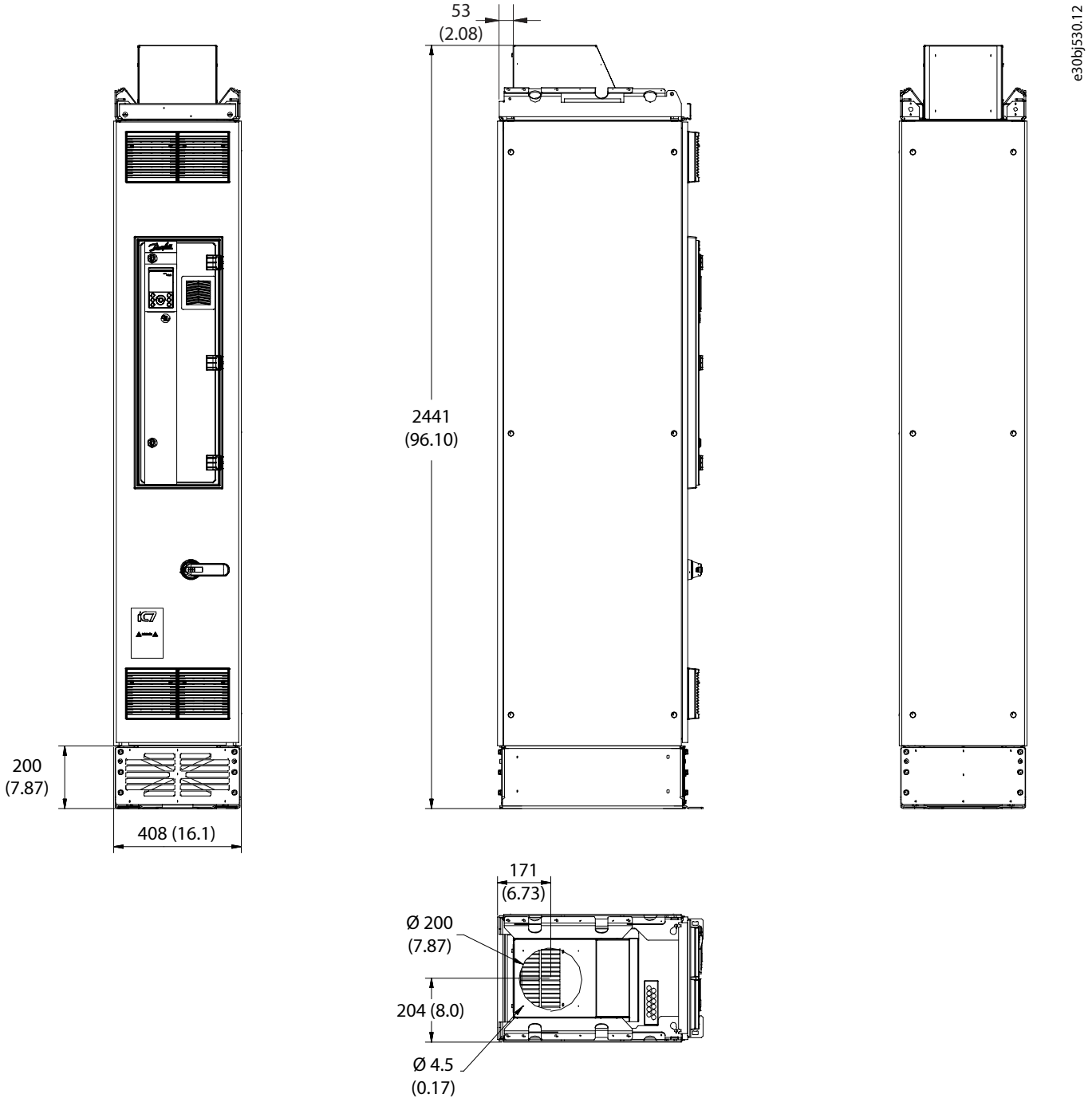

Figure 112: Dimensions for the Cooling Air Output Flange (+OAOF), FE9, in mm (in)

The exhaust air can also be directed backwards. See 9.2.23 Dimensions for Back-channel Cooling Option, FE9.

Danfoss Drives Oy © 2026.06

9.2.31 Dimensions for the Cooling Air Output Flange Option, FE10

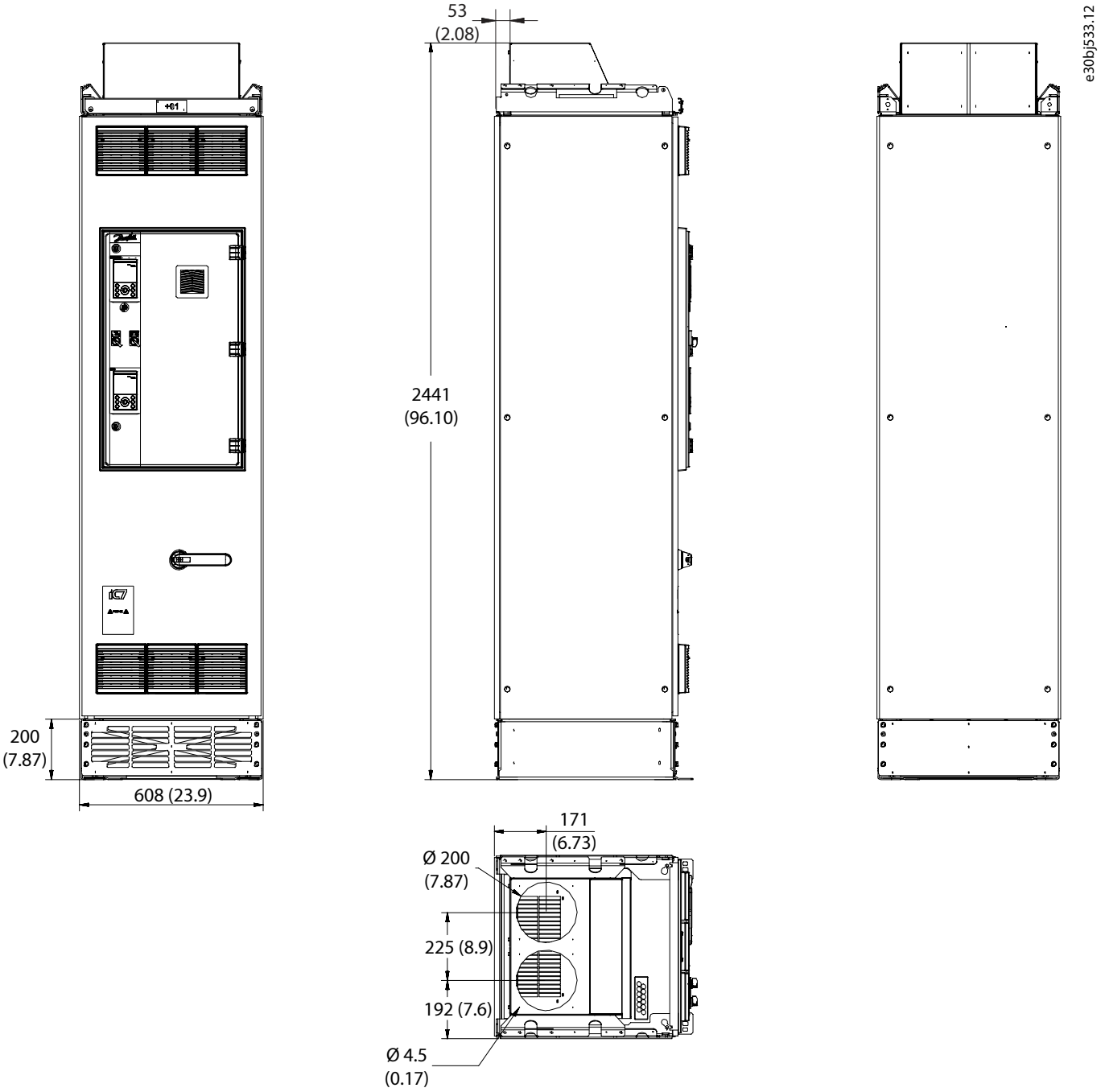

Figure 113: Dimensions for the Cooling Air Output Flange (+OAOF), FE10, in mm (in)

The exhaust air can also be directed backwards. See 9.2.24 Dimensions for Back-channel Cooling Option, FE10.

9.2.32 Dimensions for the Cooling Air Output Flange Option, AE10, IE10

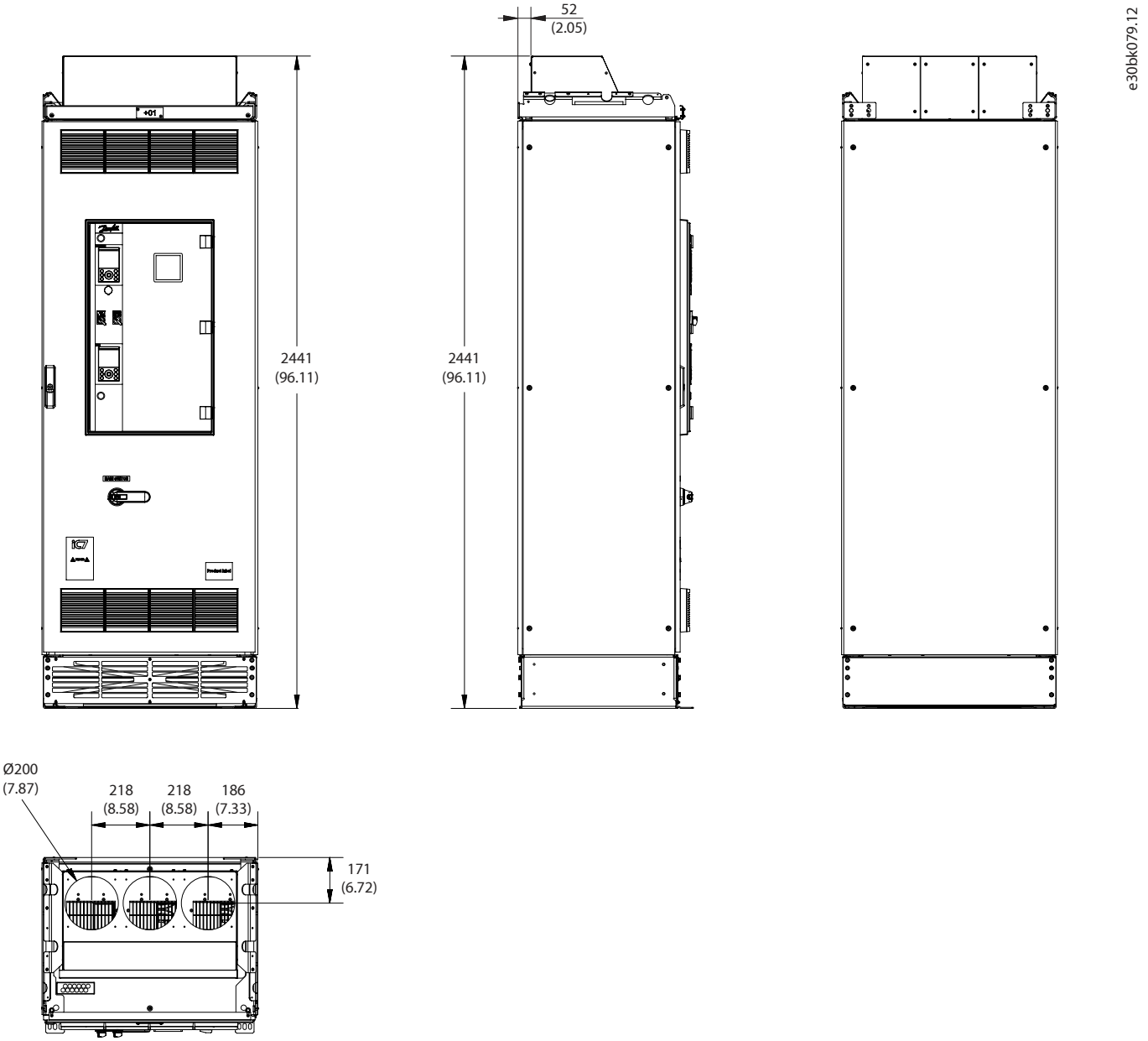

Figure 114: Dimensions for the Cooling Air Output Flange Option (+OAOF), AE10, IE10, in mm (in)

The exhaust air can also be directed backwards. See 9.2.25 Dimensions for Back-channel Cooling Option, AE10, IE10.

Danfoss Drives Oy © 2026.06

9.2.33 Dimensions for the Cooling Air Output Flange Option, AE11, IE11

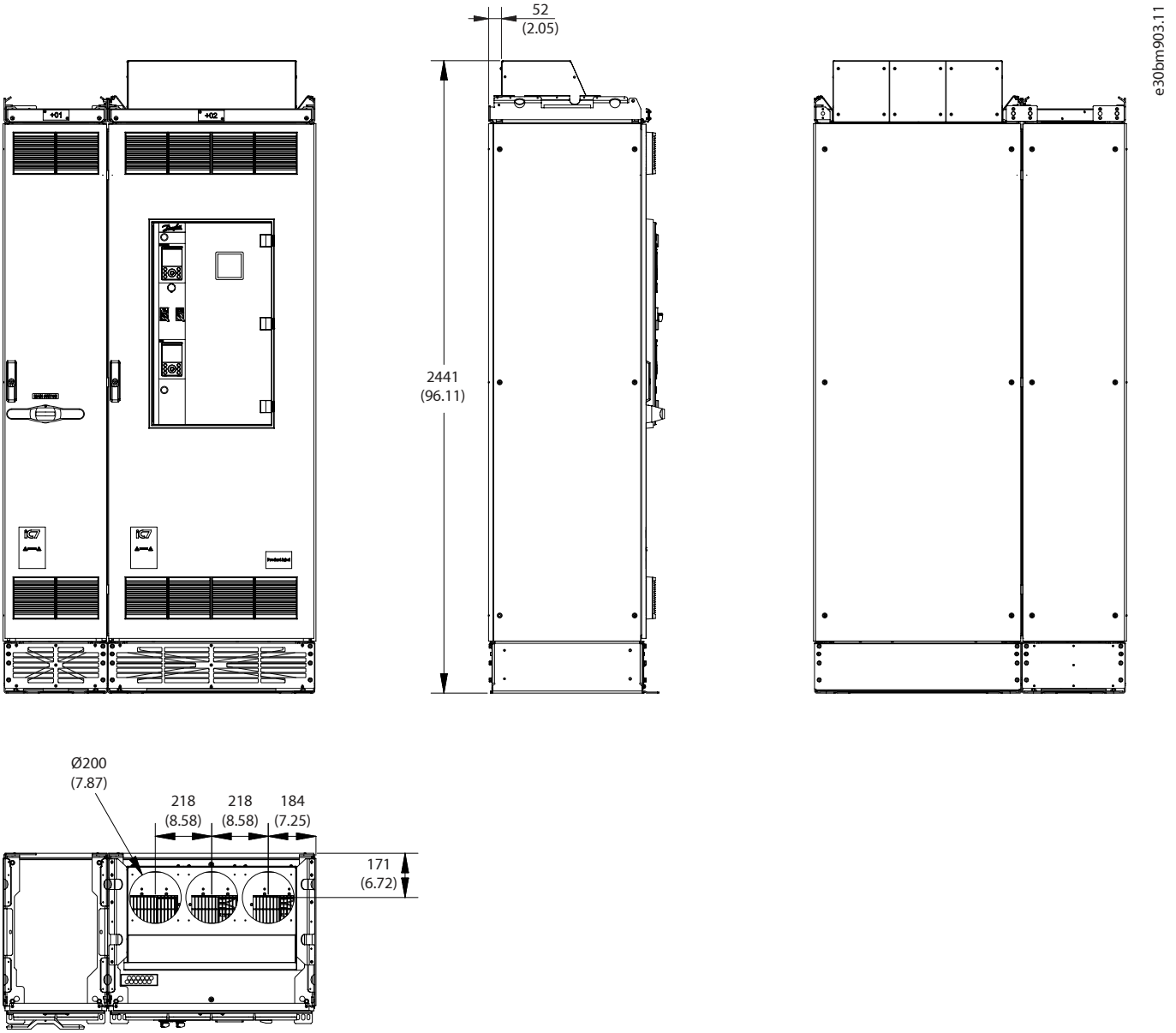

Figure 115: Dimensions for the Cooling Air Output Flange Option (+OAOF), AE11, IE11, in mm (in)

The exhaust air can also be directed backwards. See 9.2.26 Dimensions for Back-channel Cooling Option, AE11, IE11.

9.2.34 Dimensions for the Cooling Air Output Flange Option, 2 x AE10, 2 x IE10

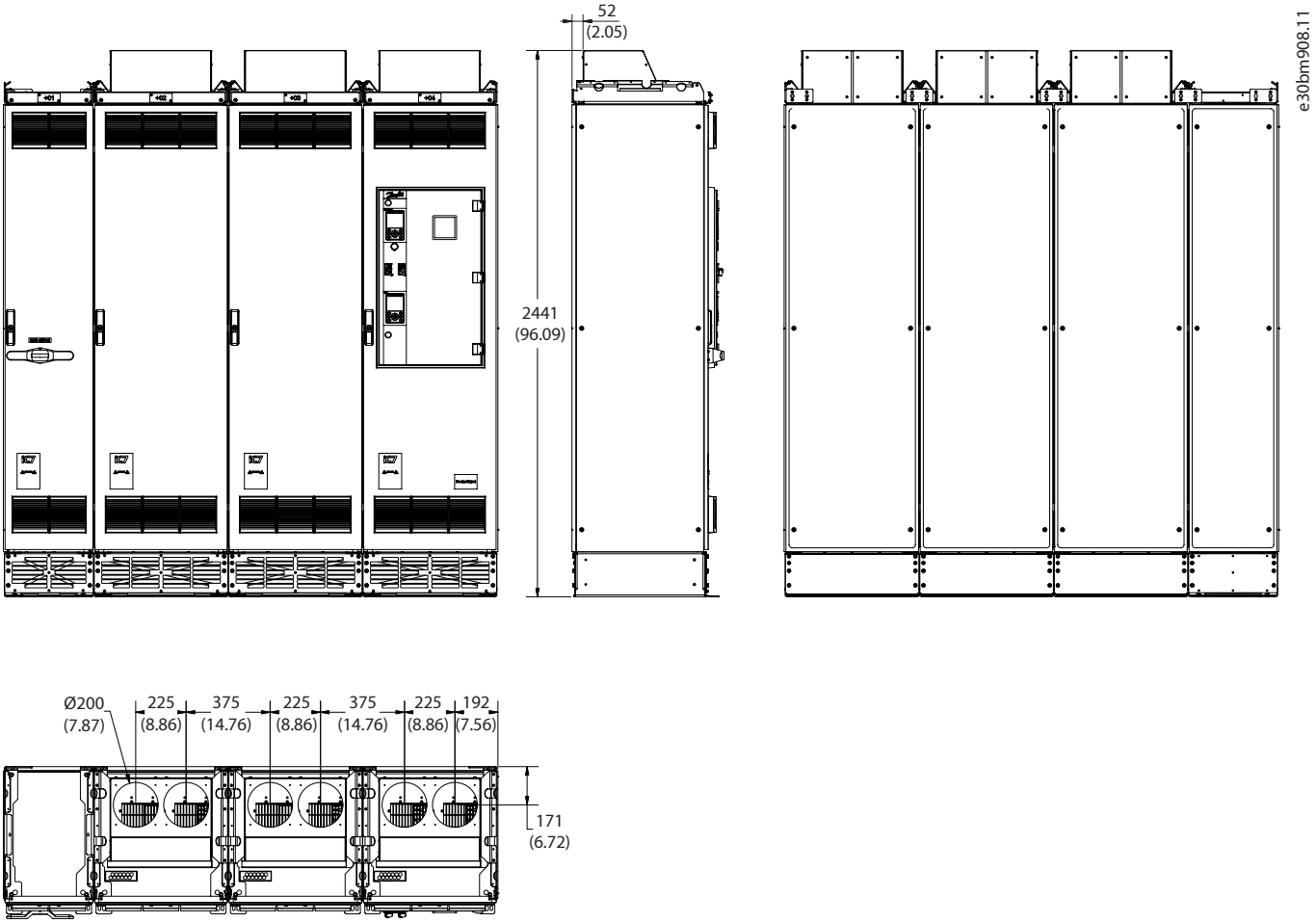

Figure 116: Dimensions for the Cooling Air Output Flange Option (+OAOF), 2 x AE10, 2 x IE10, in mm (in)

The exhaust air can also be directed backwards. See 9.2.27 Dimensions for Back-channel Cooling Option, 2 x AE10, 2 x IE10.

Danfoss Drives Oy © 2026.06

9.2.35 Dimensions for the Cooling Air Output Flange Option, 2 x AE11, 2 x IE11

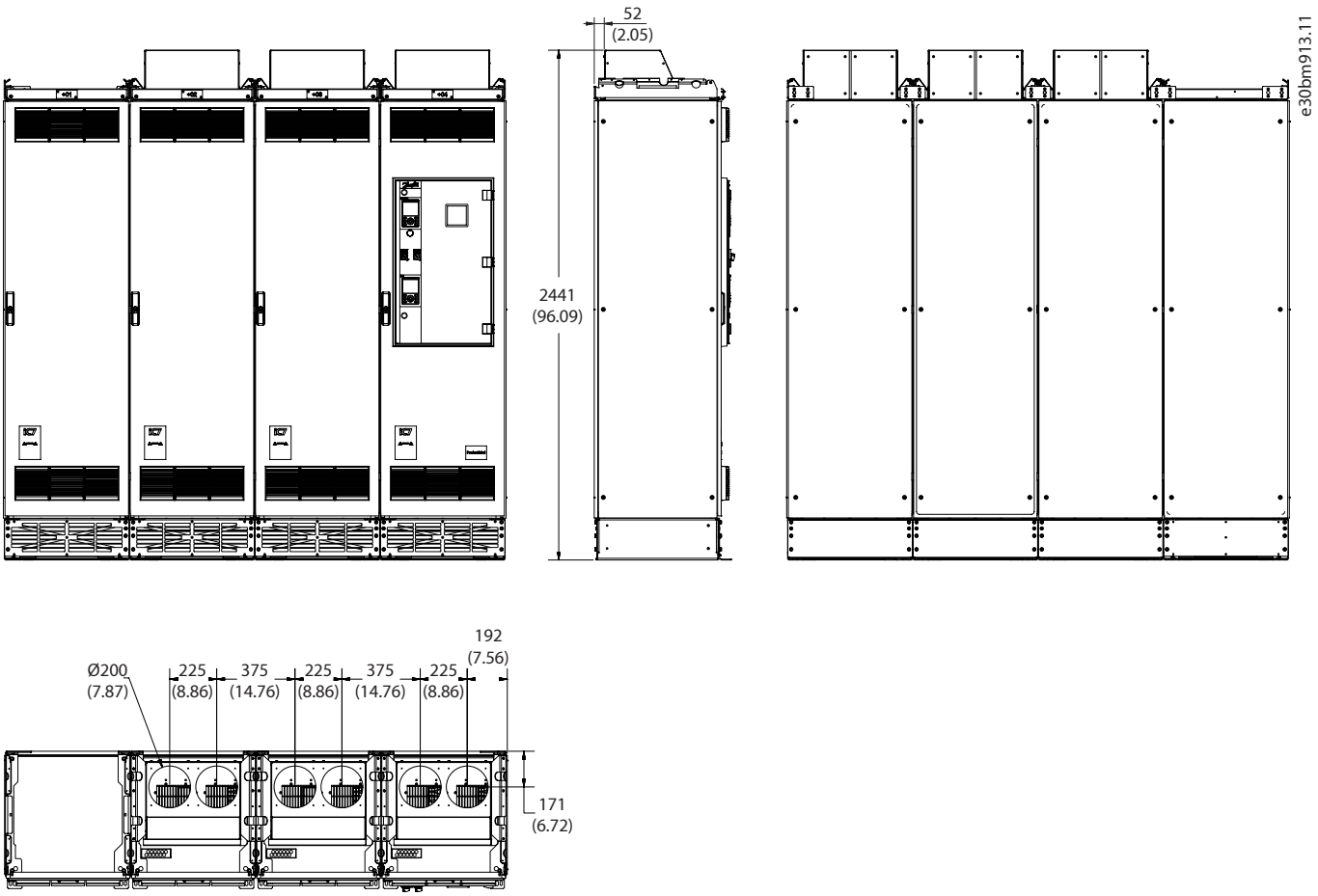

Figure 117: Dimensions for the Cooling Air Output Flange Option (+OAOF), 2 x AE11, 2 x IE11, in mm (in)

The exhaust air can also be directed backwards. See 9.2.28 Dimensions for Back-channel Cooling Option, 2 x AE11, 2 x IE11.

9.2.36 Dimensions for the Cooling Air Output Flange Option, 3 x AE11, 3 x IE11

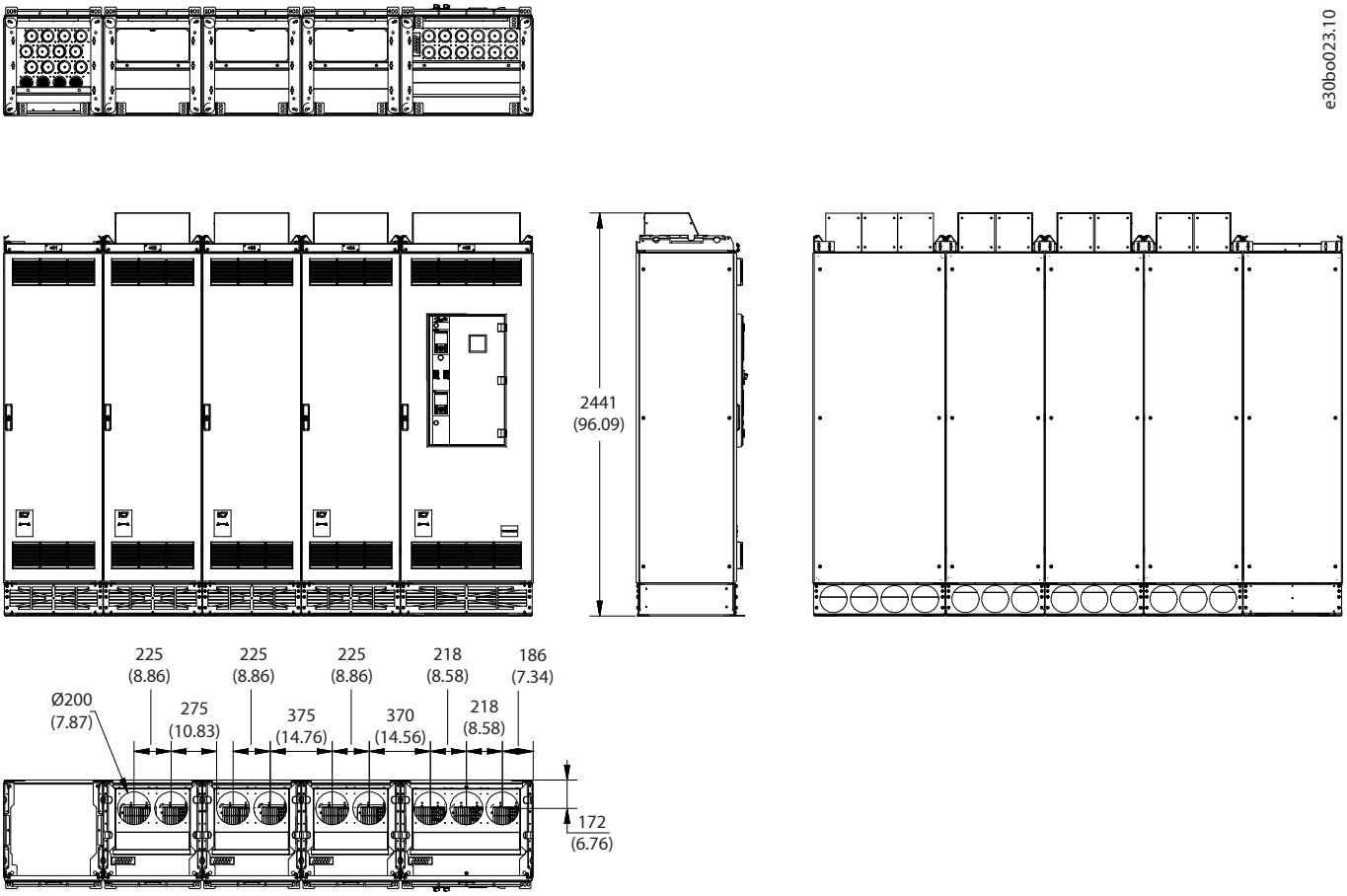

Figure 118: Dimensions for the Cooling Air Output Flange Option (+OAOF), 3 x AE11, 3 x IE11, in mm (in)

The exhaust air can also be directed backwards. See 9.2.29 Dimensions for Back-channel Cooling Option, 3 x AE11, 3 x IE11.

Danfoss Drives Oy © 2026.06

9.2.37 Dimensions for the Marine Construction Option

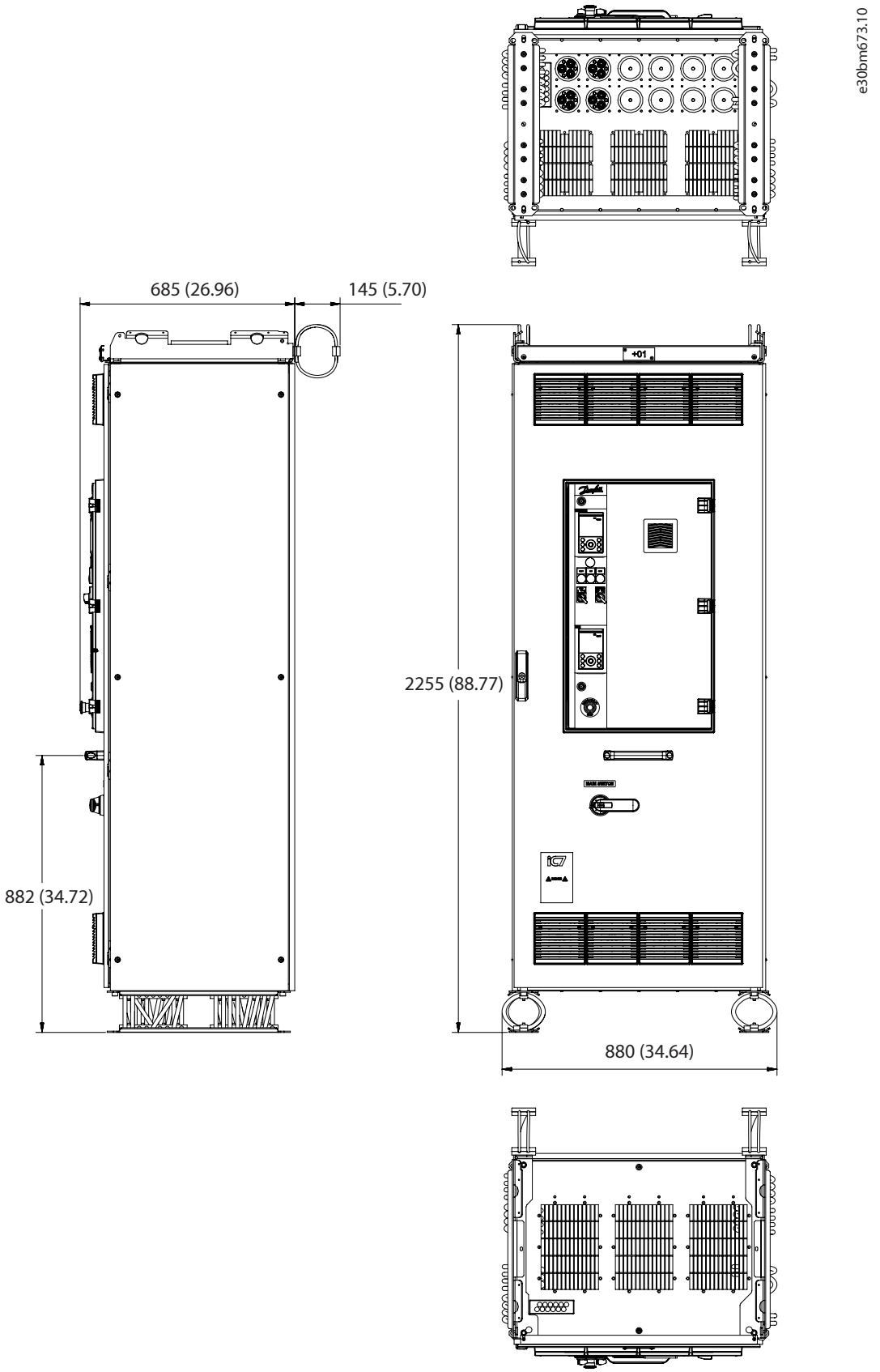

Figure 119: Dimensions for the Marine Construction Option, +AFMC

9.2.38 Dimensions of the Control Board

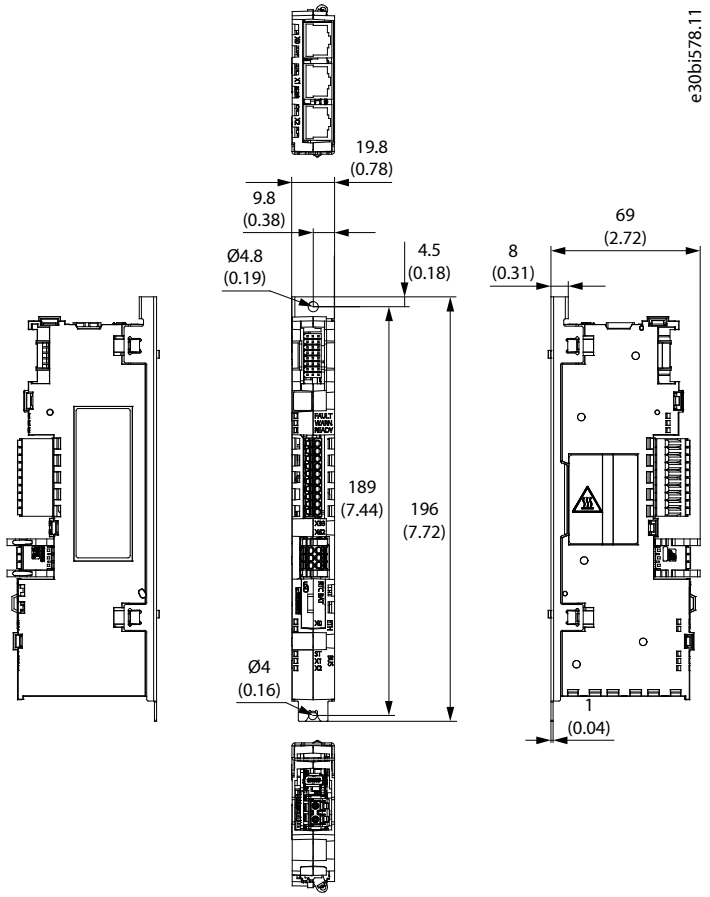

Figure 120: Dimensions of the Control Board in mm (in)

Danfoss Drives Oy © 2026.06

9.2.39 Dimensions of the I/O and Relay Option

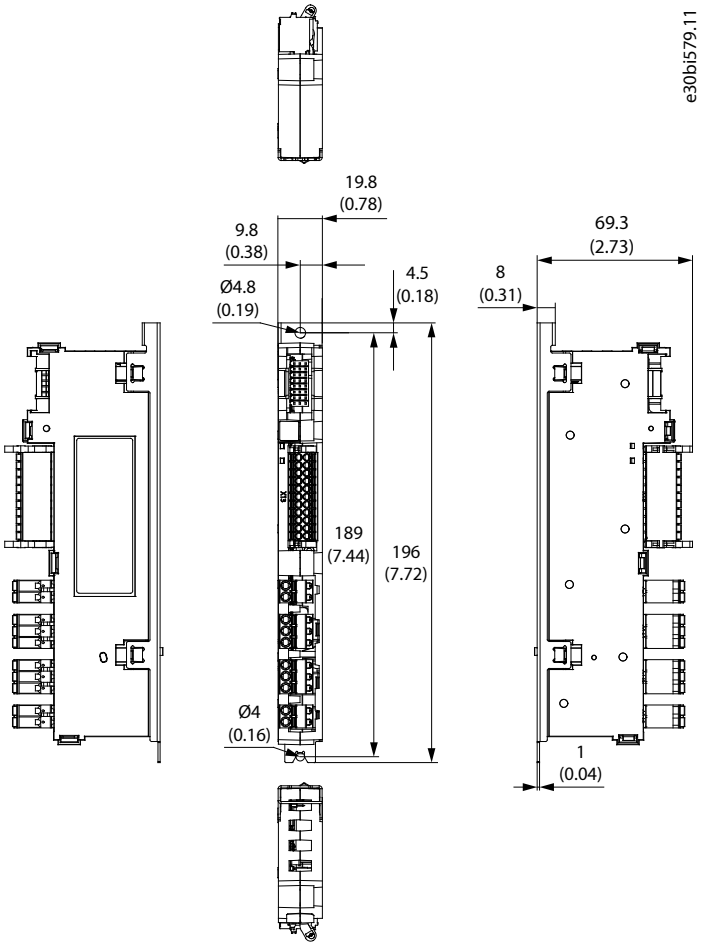

Figure 121: Dimensions of the I/O and Relay Option in mm (in)

9.2.40 Dimensions of an Option Board

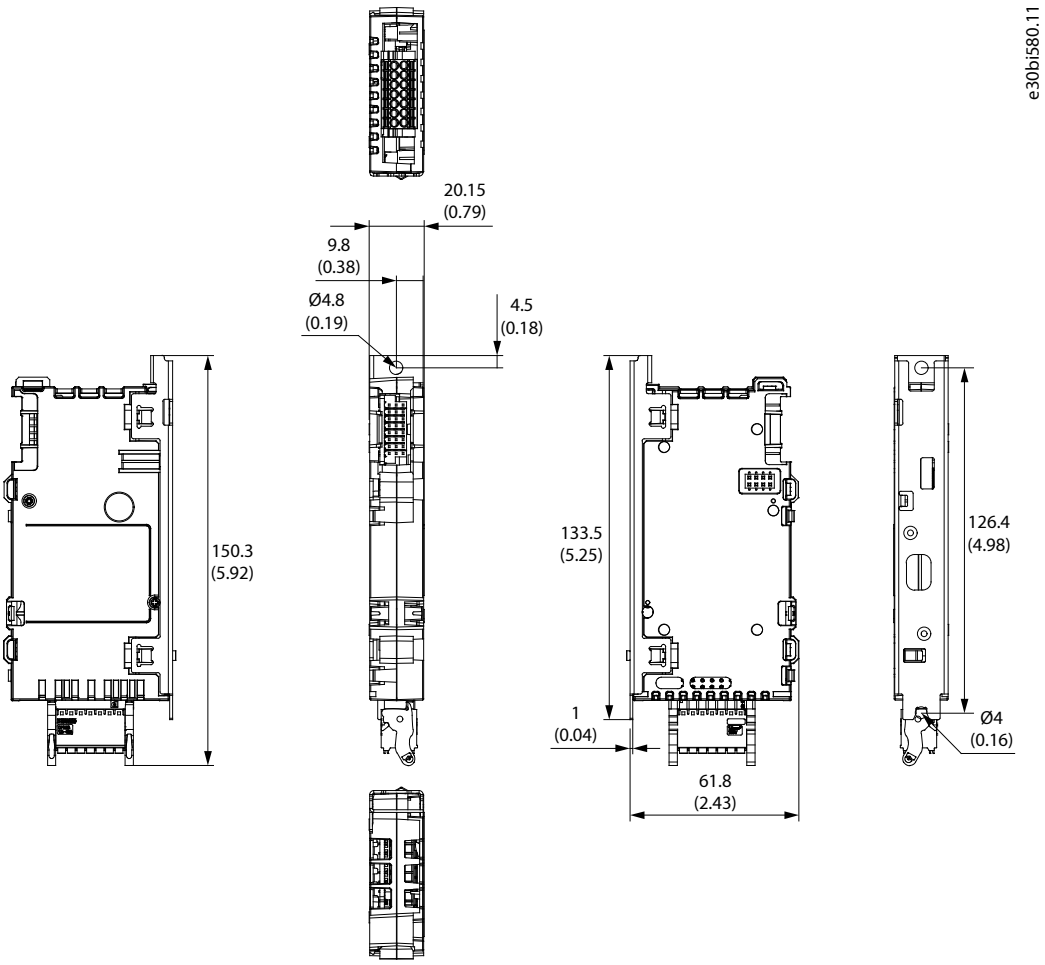

Figure 122: Dimensions of an Option Board in mm (in)

Danfoss Drives Oy © 2026.06

9.2.41 Dimensions of the 4-port Star Coupler Board

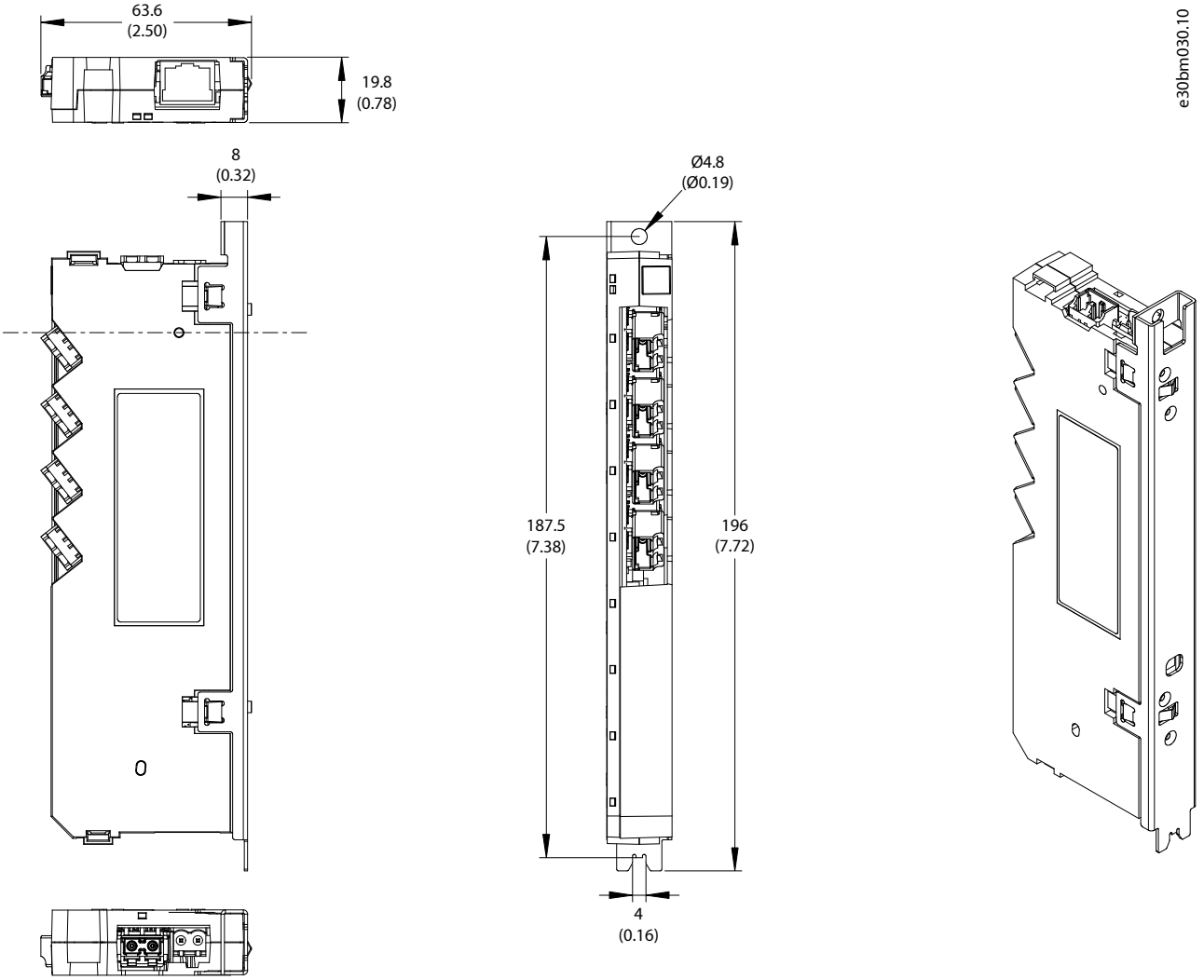

Figure 123: Dimensions of the 4-port Star Coupler Board in mm (in)

9.2.42 Dimensions of the 8-port Star Coupler Board

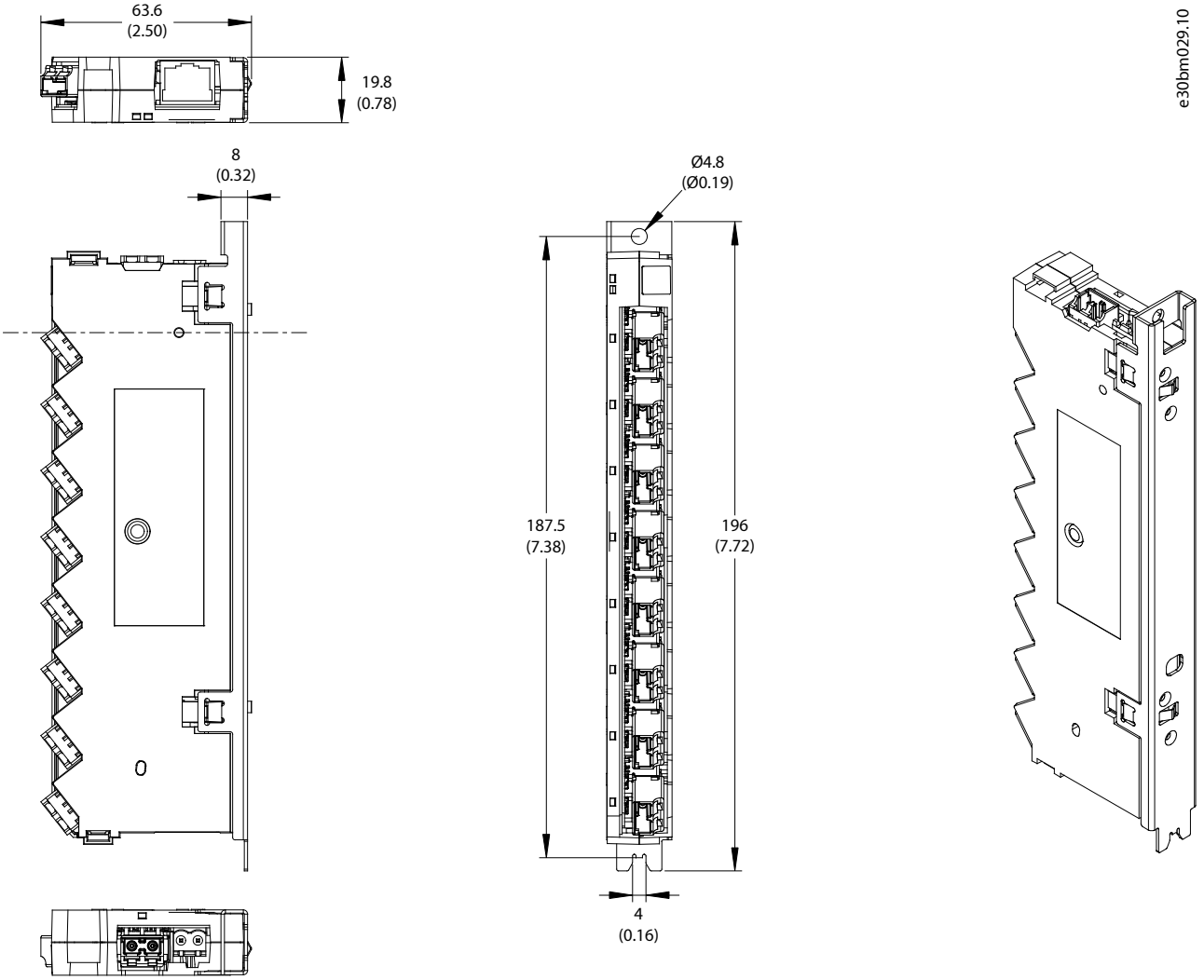

Figure 124: Dimensions of the 8-port Star Coupler Board in mm (in)

Danfoss Drives Oy © 2026.06

9.2.43 Dimensions of the 16-port Star Coupler Board

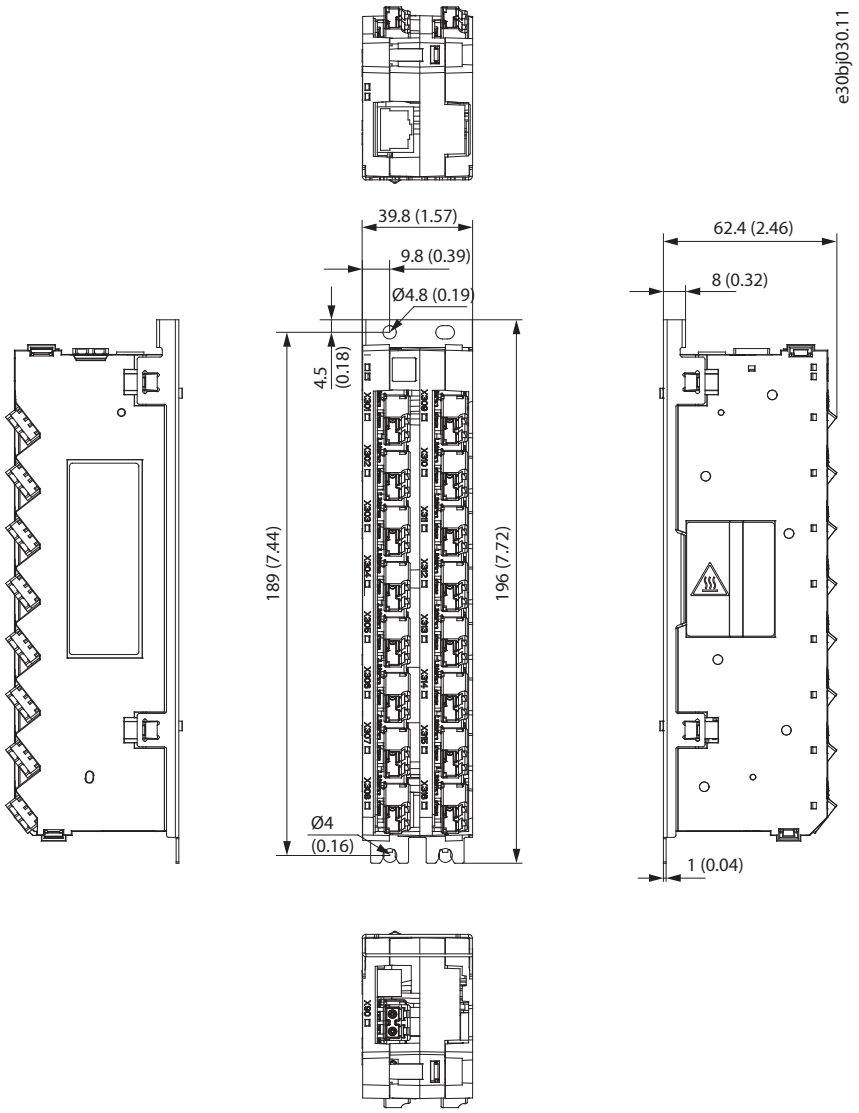

Figure 125: Dimensions of the 16-port Star Coupler Board in mm (in)

9.3 Wiring Diagrams

9.3.1 Wiring Diagram, FE9, FE10

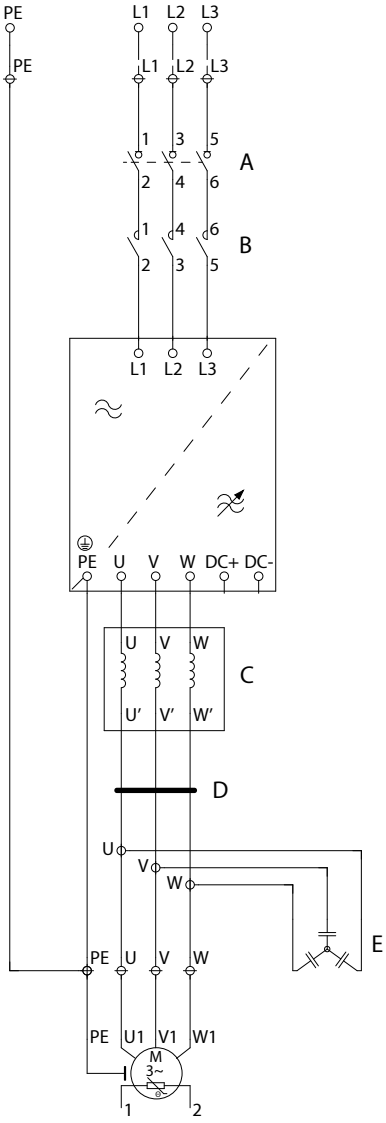

Figure 126: Wiring Diagram, FE9, FE10

A	Switch disconnector +GAMS	B	Contactor +GACO
C	dU/dt Filter choke +MADU	D	Common-mode Filter +MACM
E	dU/dt Filter capacitor +MADU		

Danfoss Drives Oy © 2026.06

9.3.2 Wiring Diagram, AE10+IE10, AE11+IE11, 261–590 A

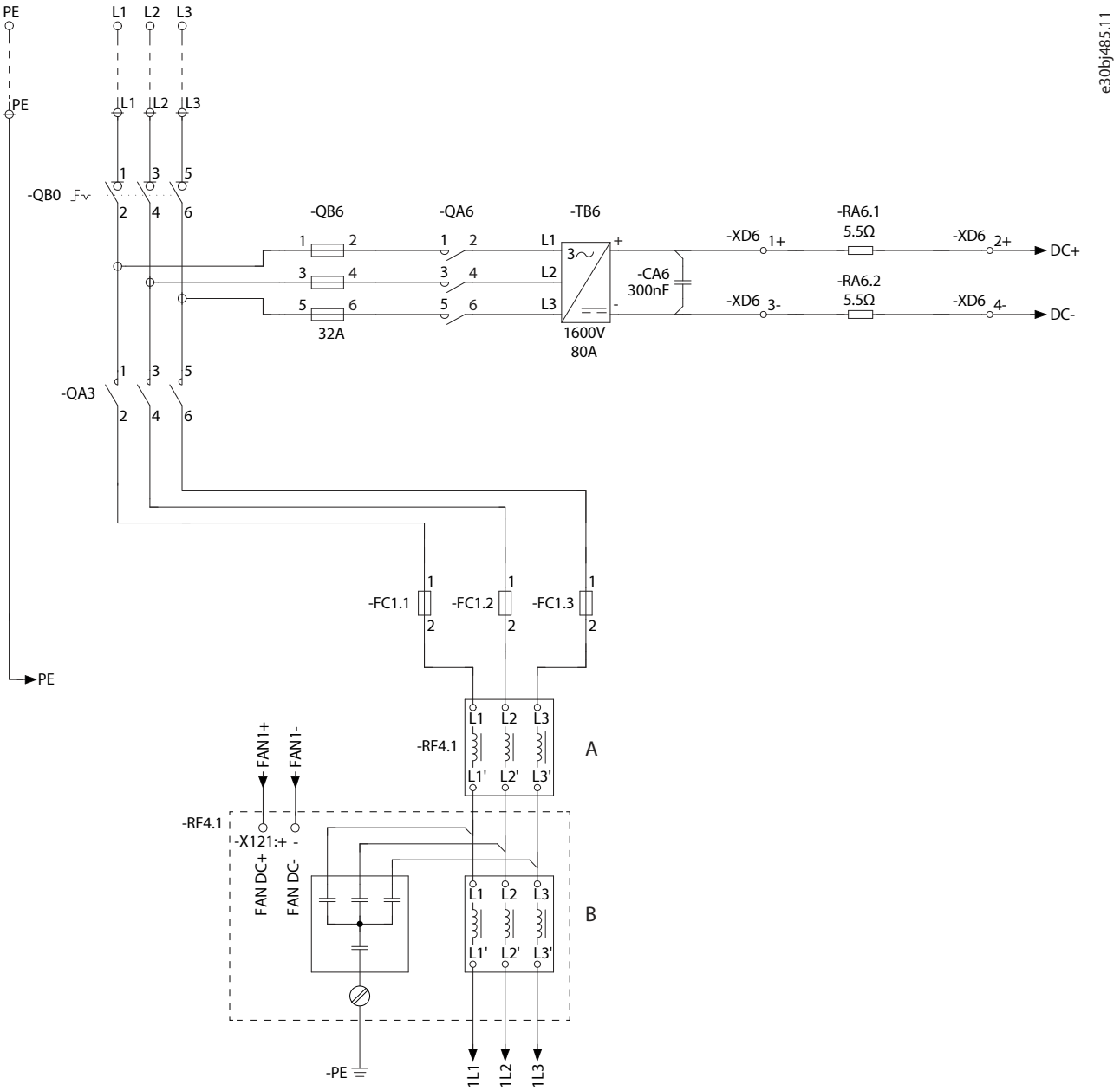

Figure 127: Wiring Diagram, AE10+IE10, AE11+IE11, 261–590 A

A	L Filter	B	LC Filter

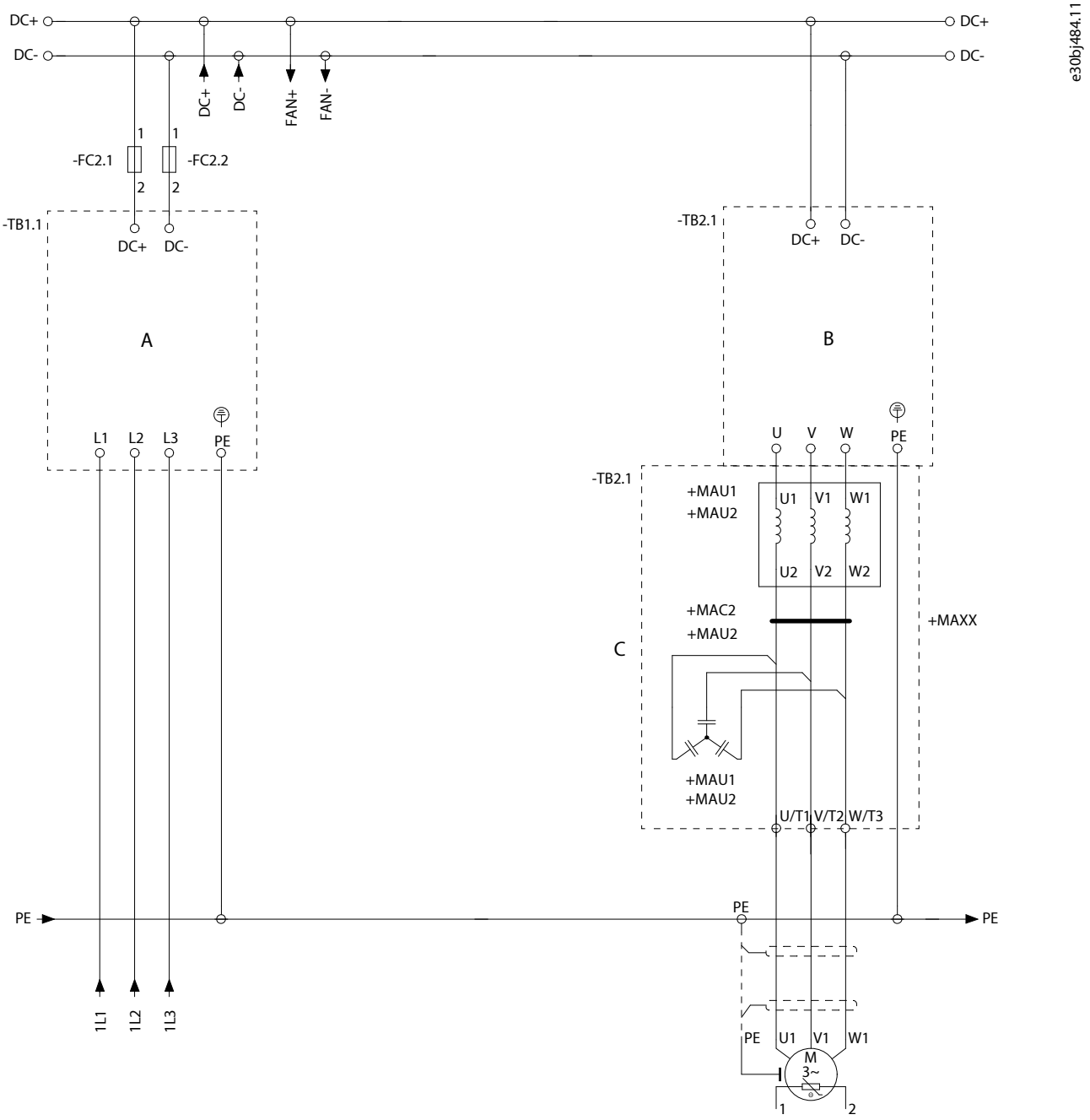

Figure 128: Wiring Diagram, AE10+IE10, AE11+IE11, 261–590 A (continued)

A	Power unit of the AFE module	B	Power unit of the inverter module
C	Integration unit		

Danfoss Drives Oy © 2026.06

9.3.3 Wiring Diagram, AE11+IE11, 658–880 A

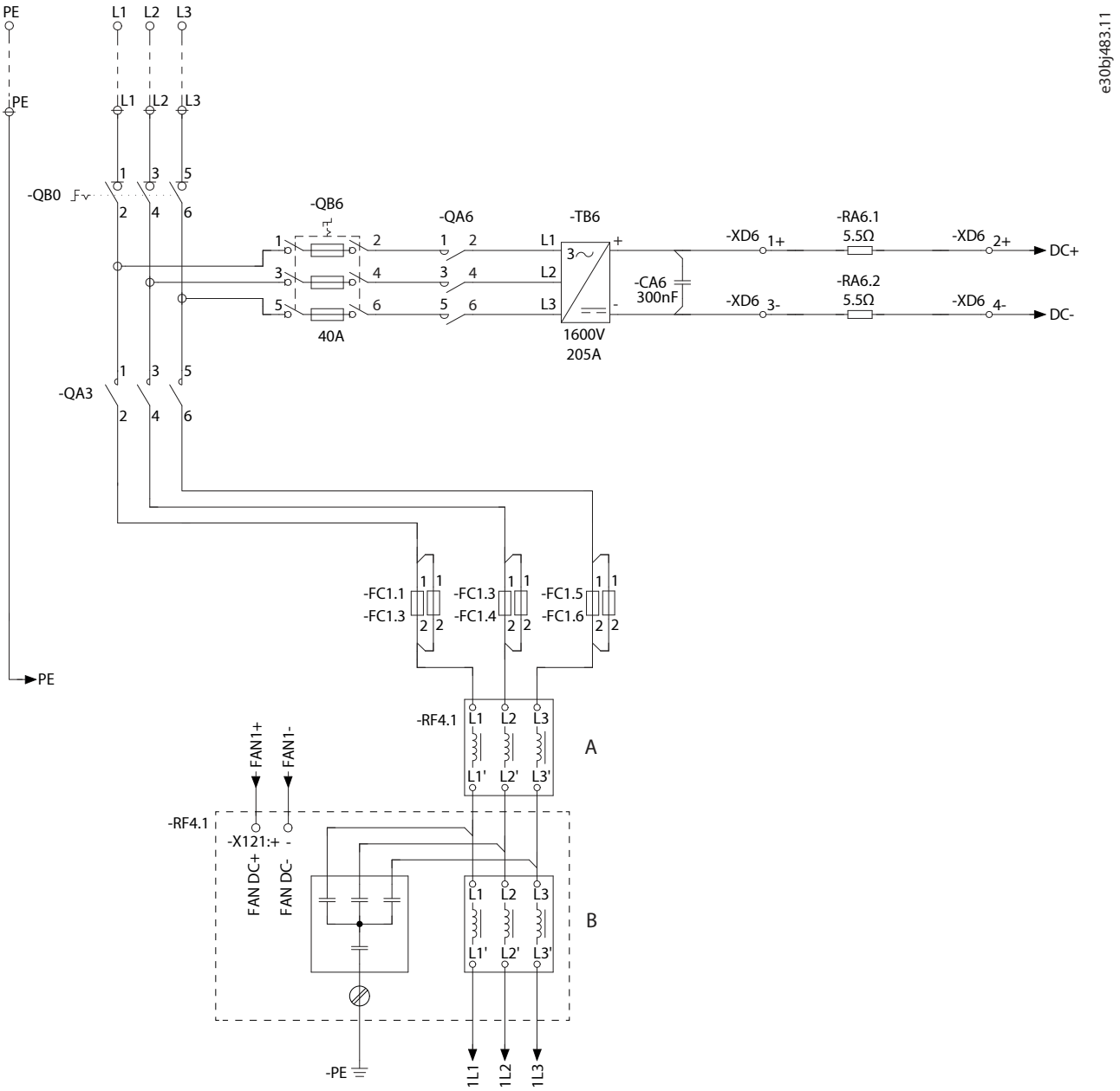

Figure 129: Wiring Diagram, AE11+IE11, 658–880 A

A	L Filter	B	LC Filter

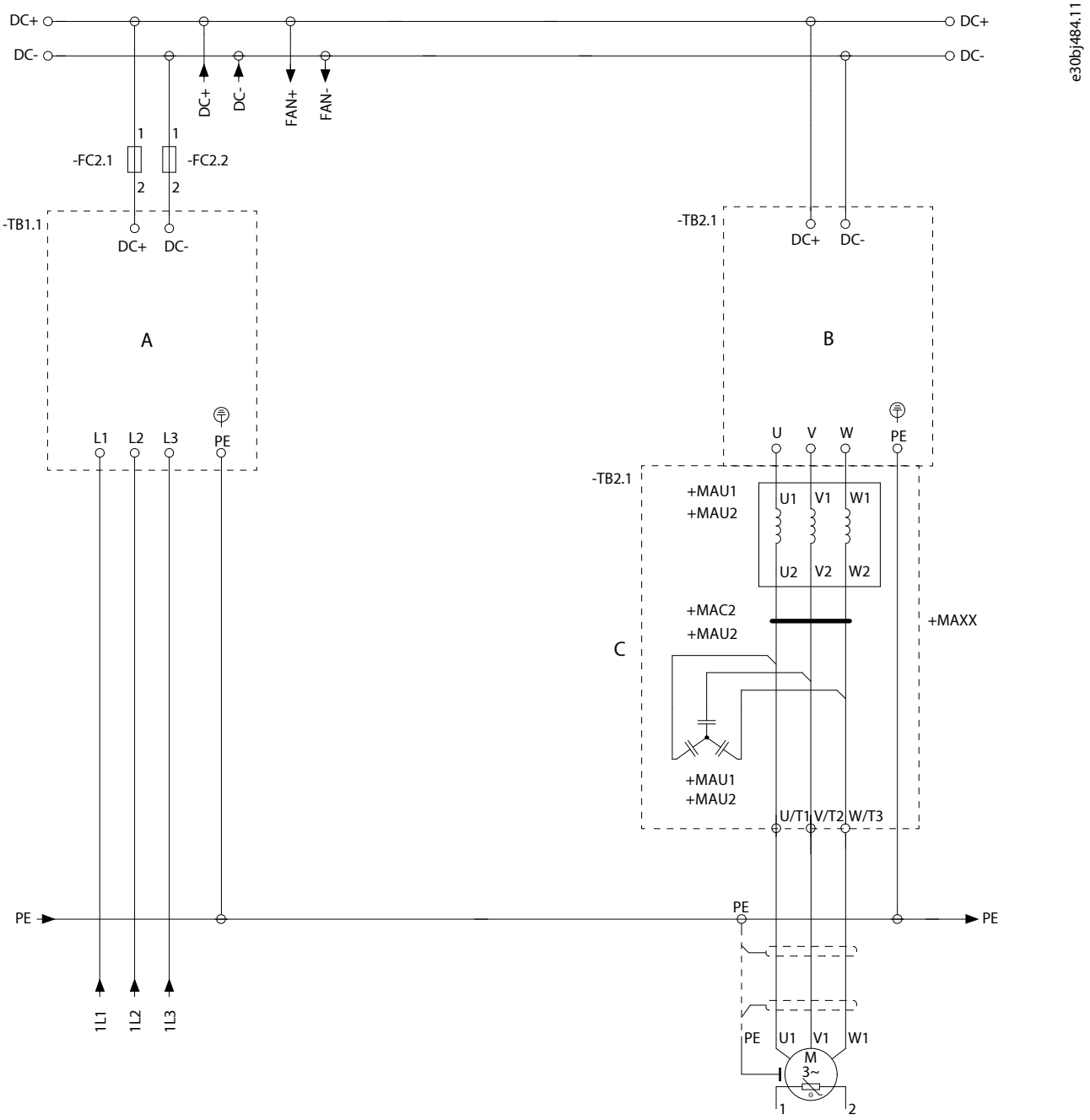

Figure 130: Wiring Diagram, AE11+IE11, 658–880 A (continued)

A	Power unit of the AFE module	B	Power unit of the inverter module
C	Integration unit		

9.3.4 Wiring Diagram, 2 x AE10+2 x IE10

This wiring diagram applies to these model codes:

- iC7-60EA3A**05**-1000...1100
- iC7-60EA3A**07**-650A...820A
- iC7-60EA3A**07**-945A (with 4 charging resistors)

Danfoss Drives Oy © 2026.06

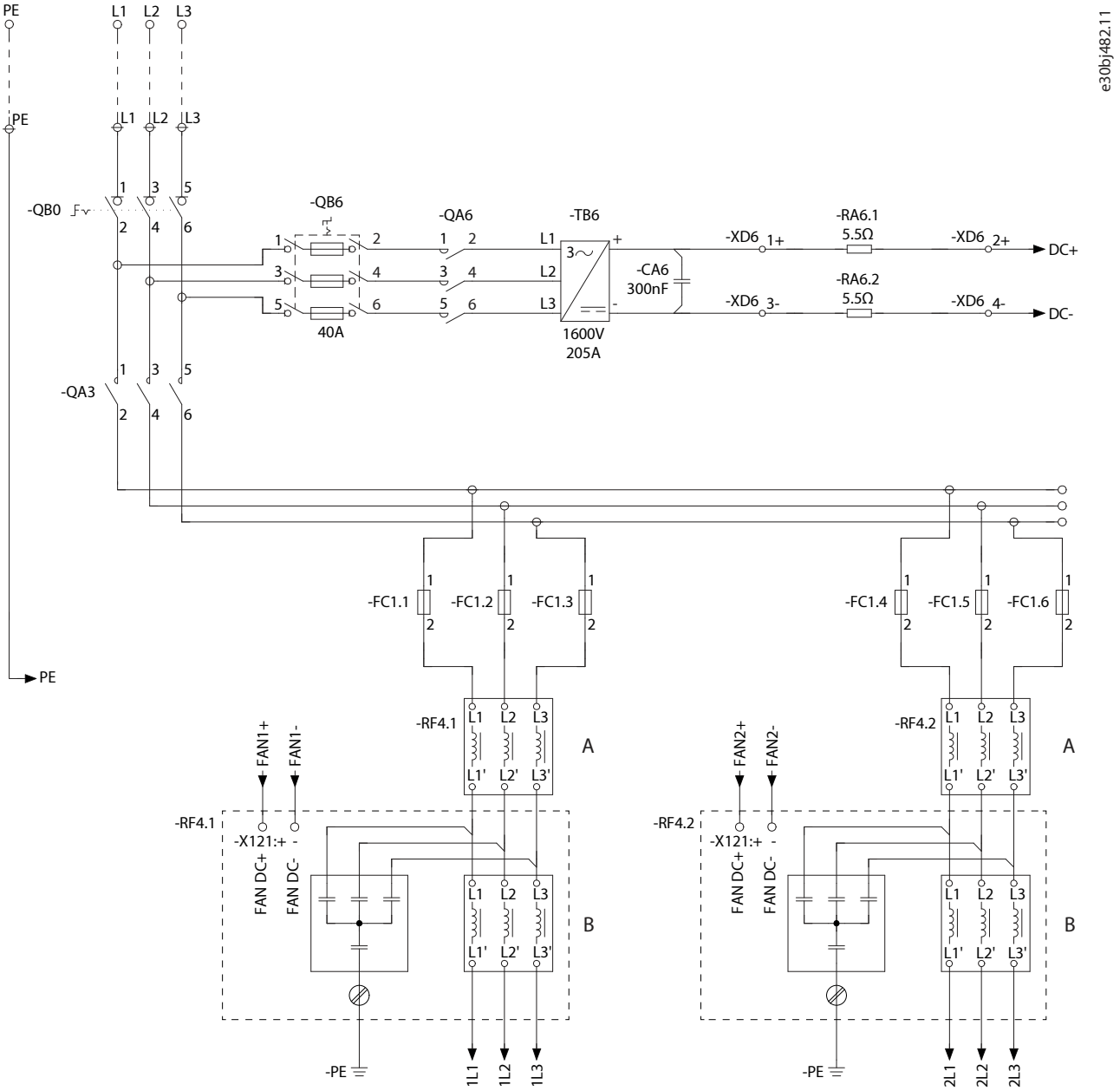

Figure 131: Wiring Diagram, 2 x AE10+2 x IE10, 1000–1100 A

A	L Filter	B	LC Filter

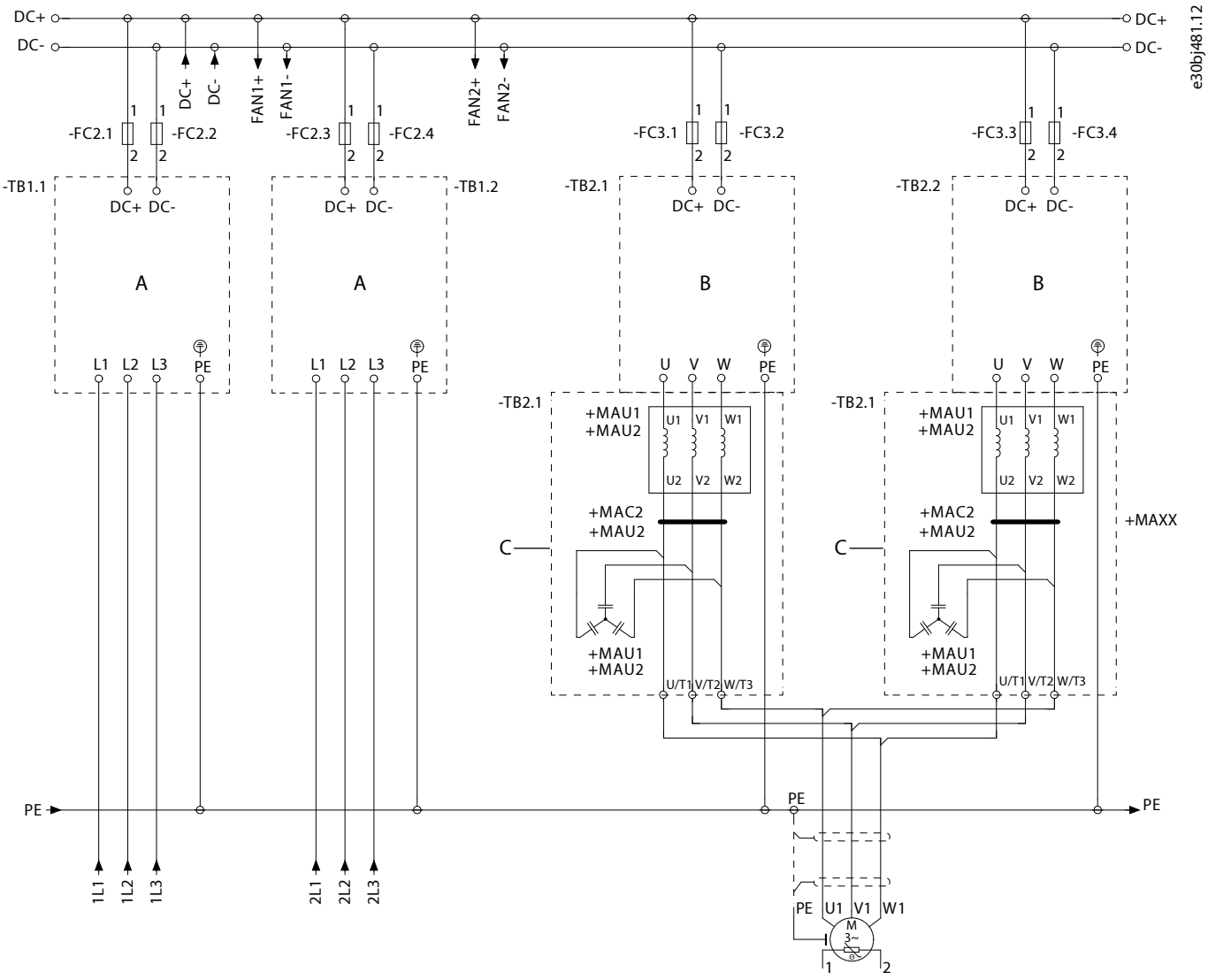

Figure 132: Wiring Diagram, 2 x AE10+2 x IE10, 1000–1100 A (continued)

A	Power unit of the AFE module	B	Power unit of the inverter module
C	Integration unit		

9.3.5 Wiring Diagram, 2 x AE11+2 x IE11

This wiring diagram applies to these model codes:

- iC7-60EA3A**05**-1260...1710
- iC7-60EA3A**07**-1060...1180

Danfoss Drives Oy © 2026.06

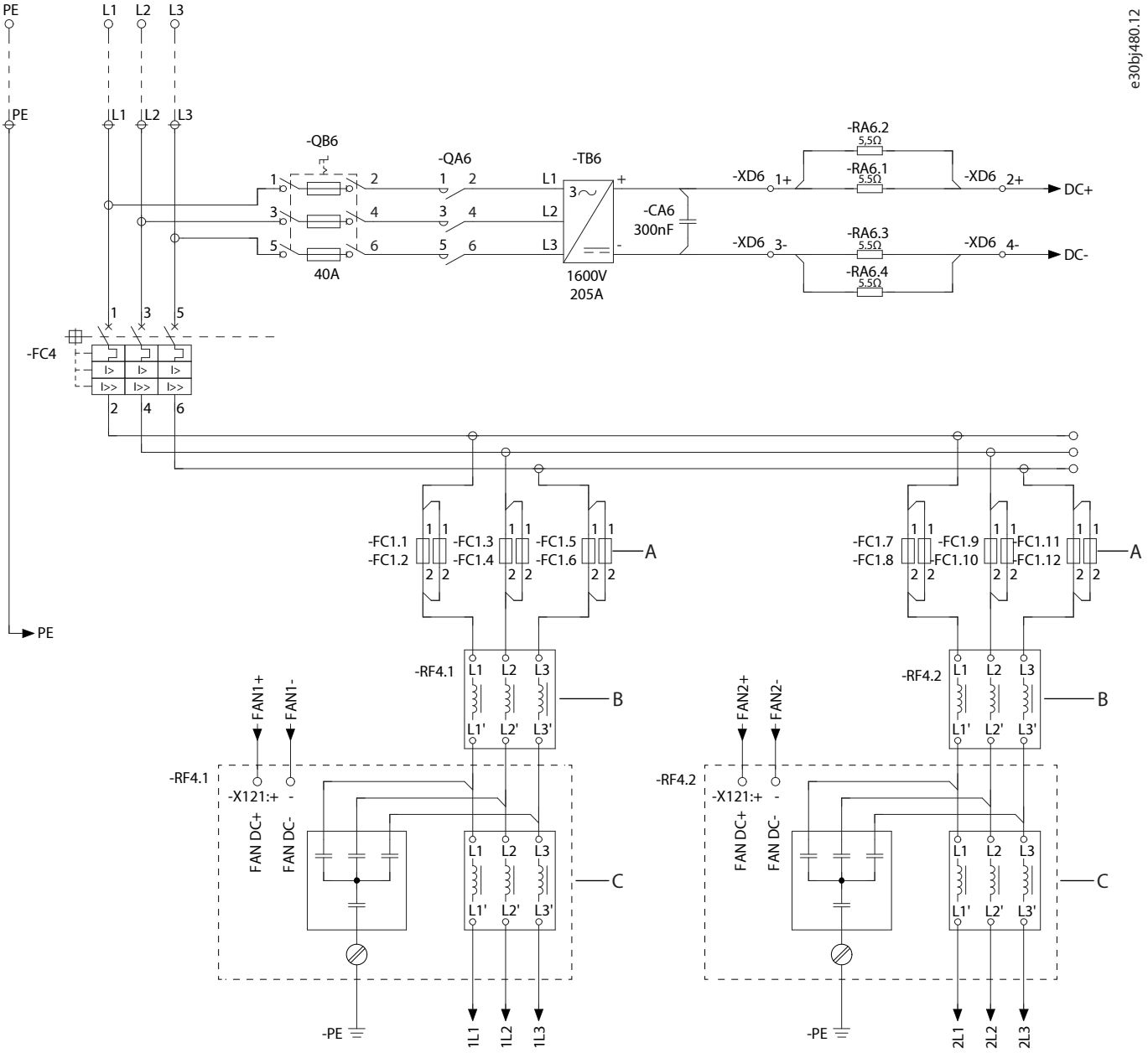

Figure 133: Wiring Diagram, 2 x AE11+2 x IE11, 1260–1710 A

A	AC fuses (there is either 1 or 2 fuses per phase)	B	L Filter
C	LC Filter		

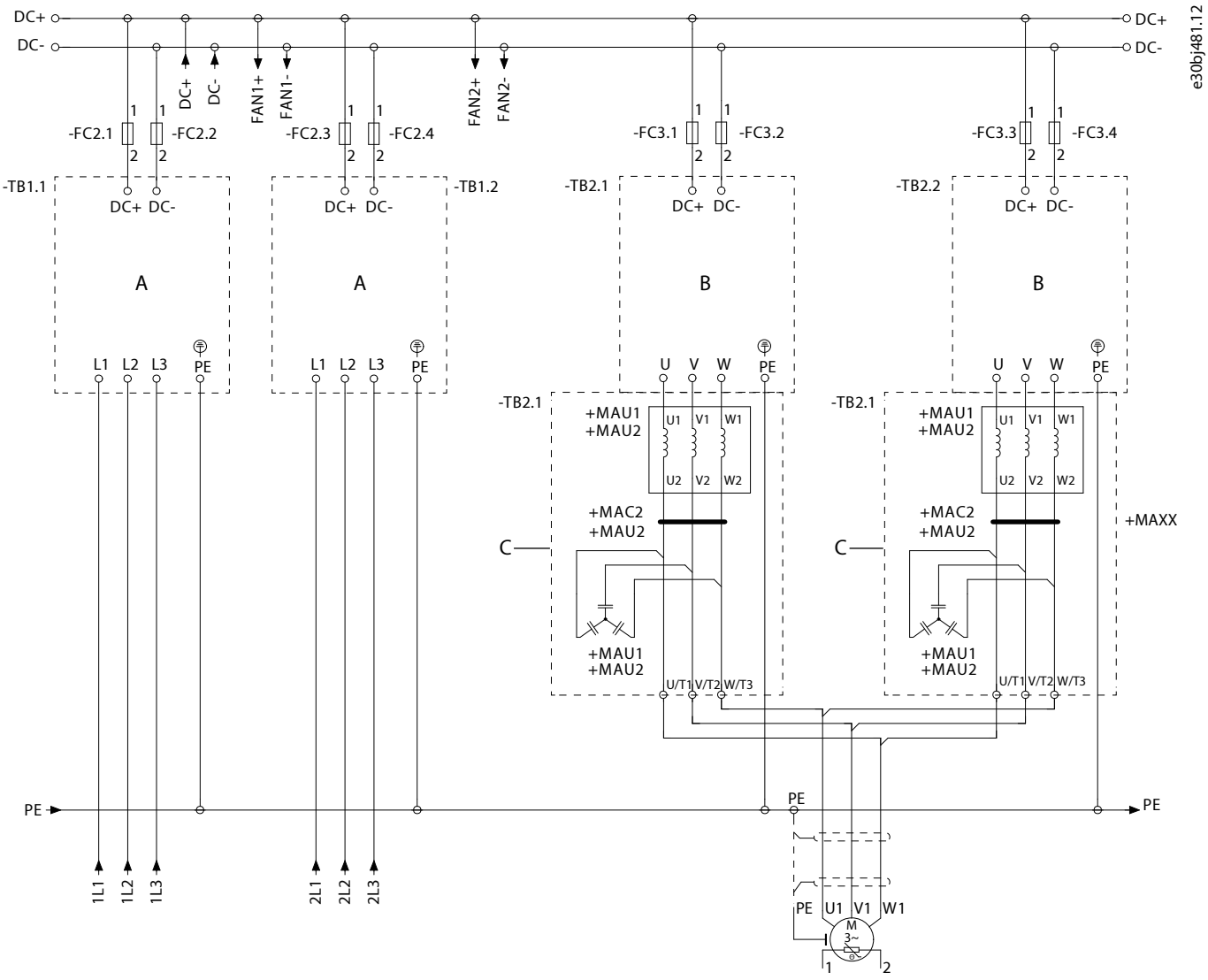

Figure 134: Wiring Diagram, 2 x AE11+2 x IE11, 1260–1710 A (continued)

A	Power unit of the AFE module	B	Power unit of the inverter module
C	Integration unit		

9.3.6 Wiring Diagram, 3 x AE11 + 3 x IE11

This wiring diagram applies to these model codes:

- iC7-60EA3A**05**-1960...2510
- iC7-60EA3A**07**-1300...1770

Danfoss Drives Oy © 2026.06

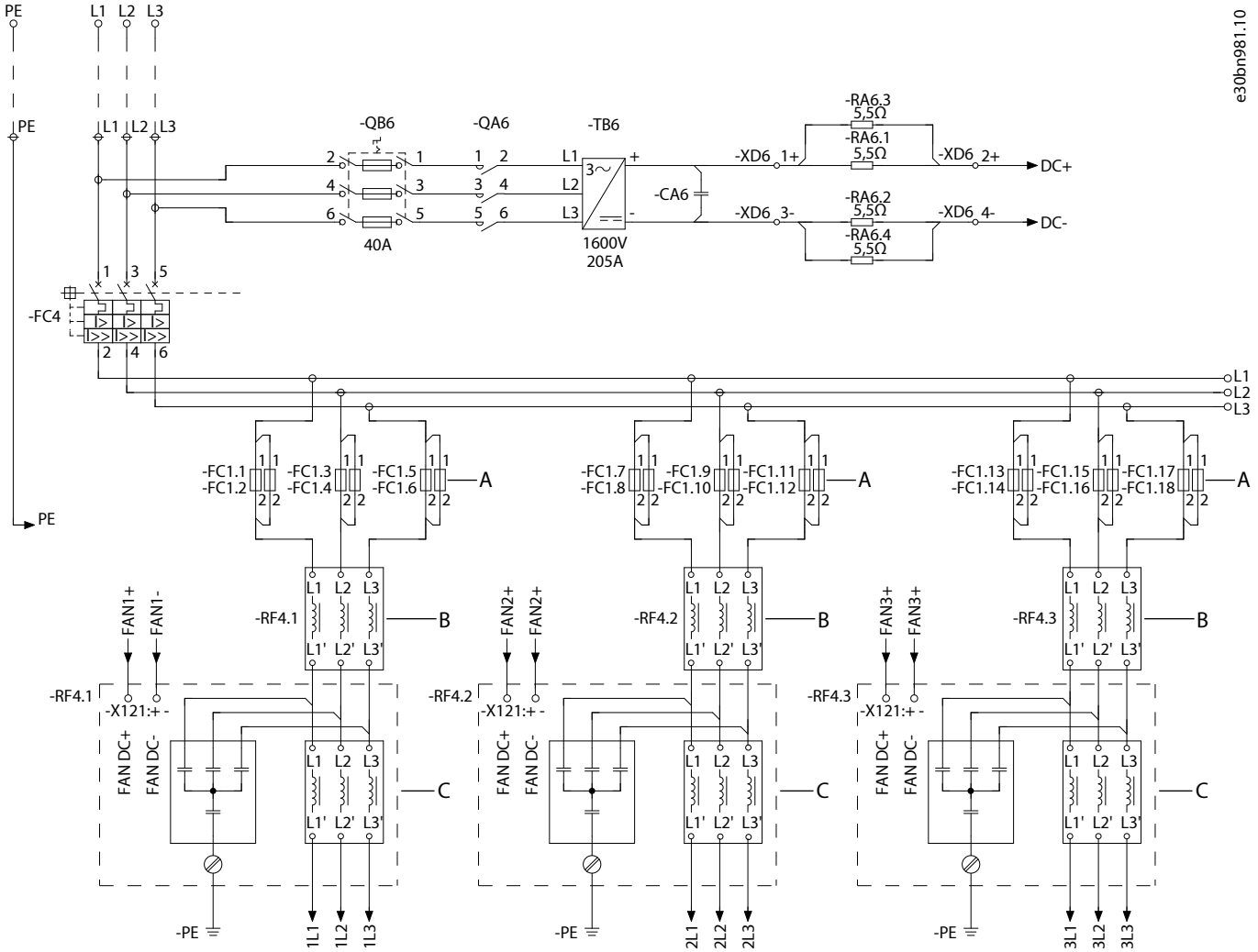

Figure 135: Wiring Diagram, 3 x AE11 + 3 x IE11

A	AC fuses (there is either 1 or 2 fuses per phase)	B	L Filter
C	LC Filter		

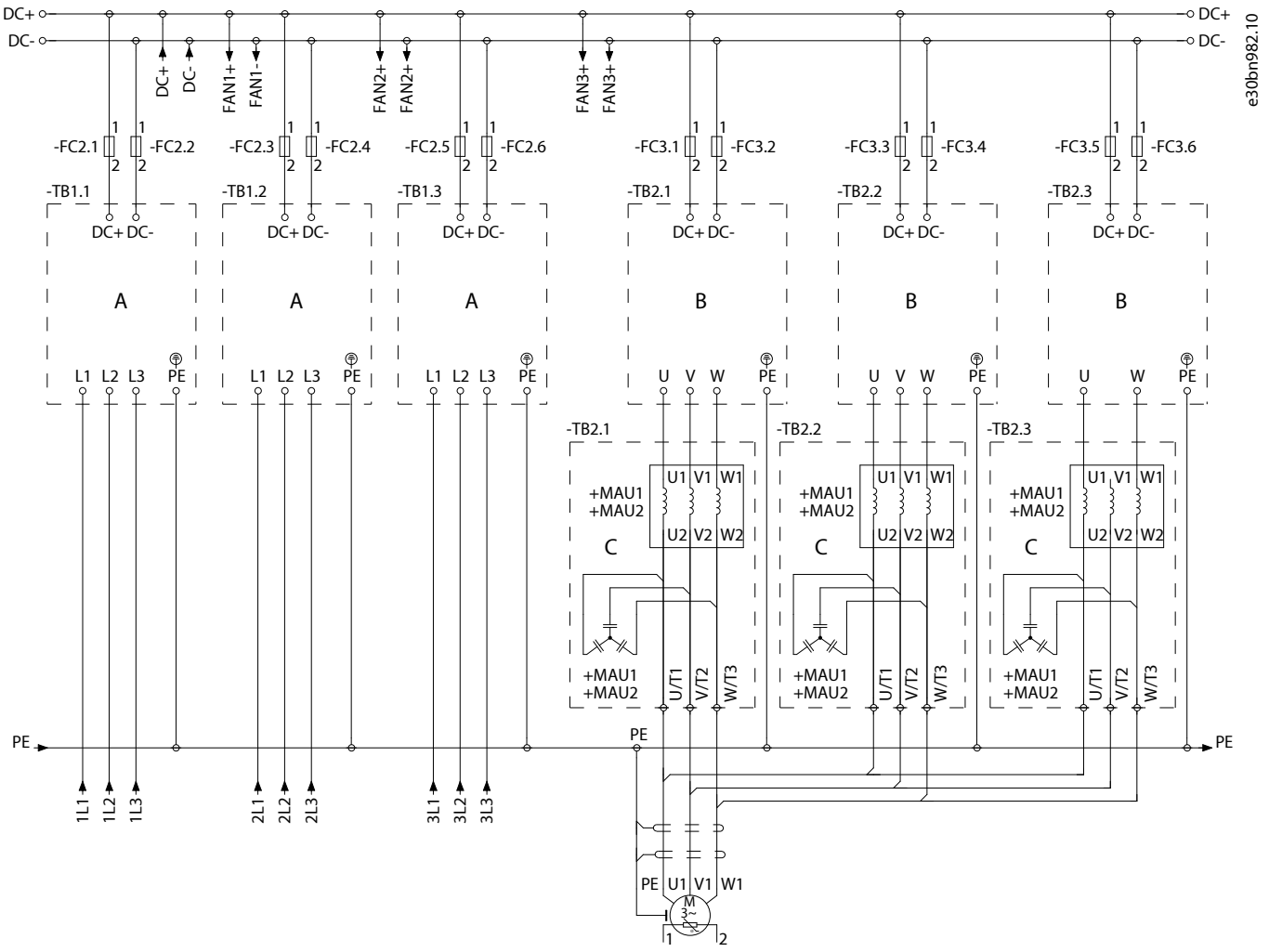

Figure 136: Wiring Diagram, 3 x AE11 + 3 x IE11 (continued)

A	Power unit of the AFE module	B	Power unit of the inverter module
C	Integration unit		

9.3.7 Pre-charging Control Wiring Diagram, AE10, AE11, IE10, IE11

NOTICE

This is a generic presentation of the system. Refer primarily to the wiring diagrams delivered with the product.

NOTICE

The products with frame designations FE9 and FE10 do not have a pre-charging control circuit.

Danfoss Drives Oy © 2026.06

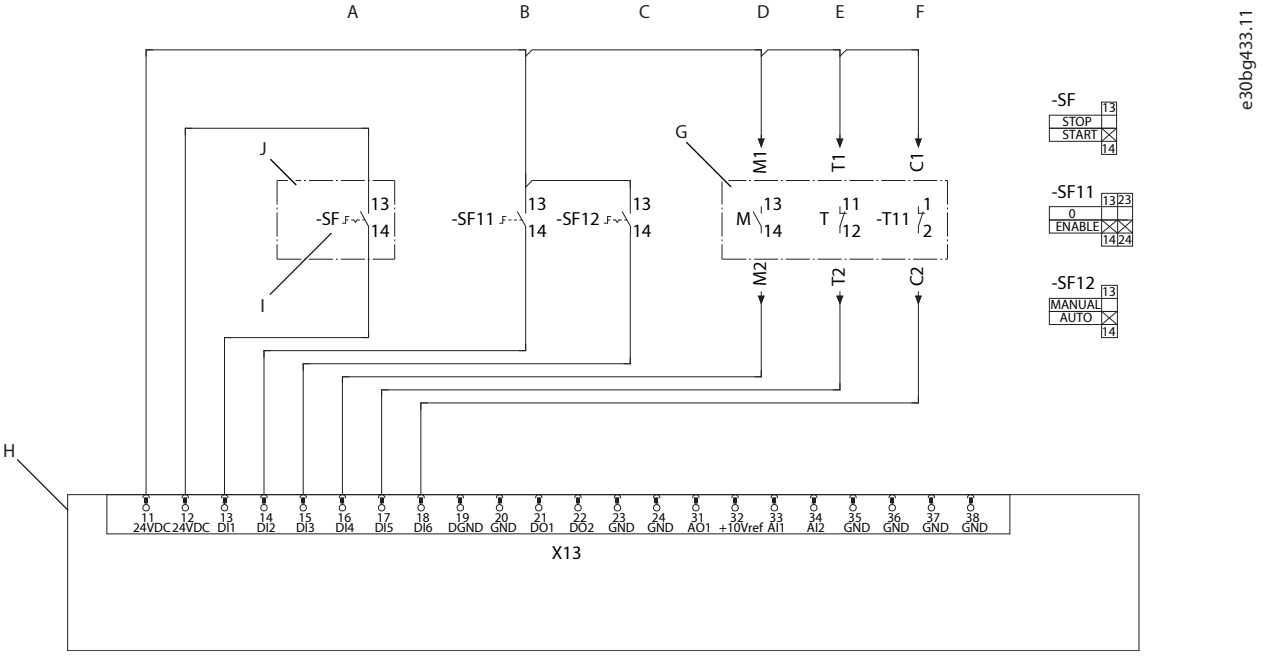

Figure 137: Pre-charging Control Wiring Diagram, AE10, AE11, IE10, IE11

A	AFE remote control start/stop	B	Mains 0-enable
C	Pre-charging man-auto	D	Main input device status
E	Main input device tripped (circuit breaker)	F	Main input section thermal fault
G	Status/supervision	H	I/O and Relay Option
I	AFE start/stop	J	Field connection

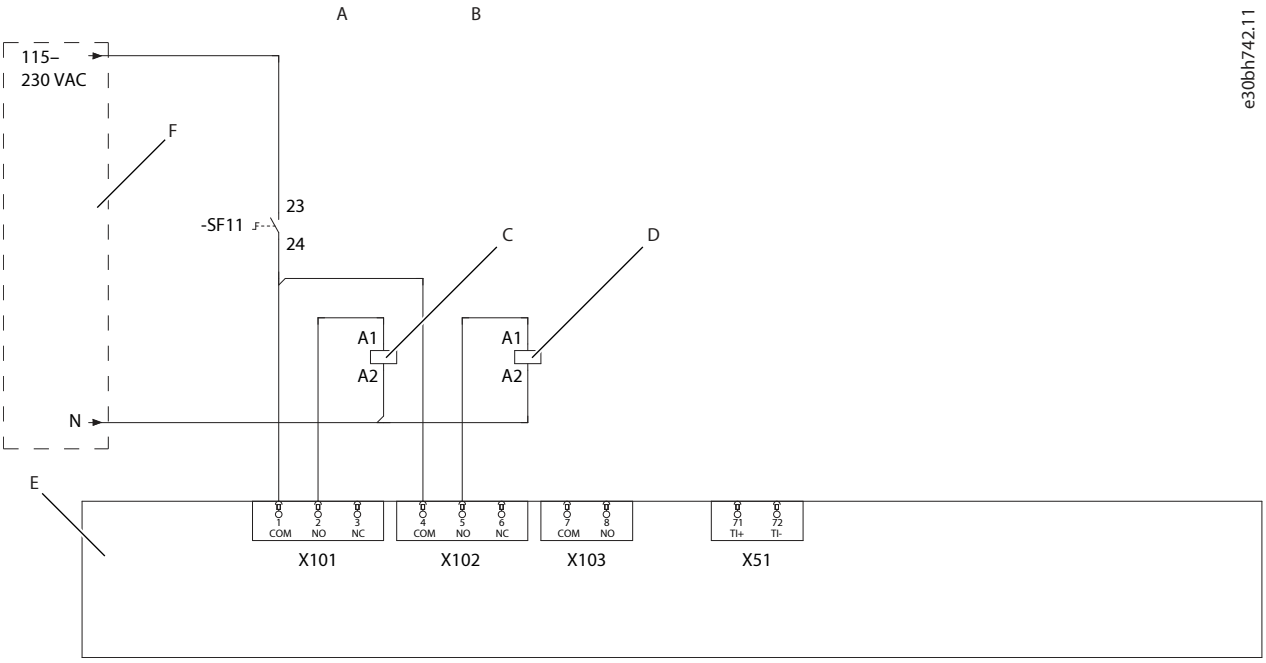

Figure 138: Pre-charging Control Wiring Diagram, AE10, AE11, IE10, IE11

A	Pre-charging contactor control	B	Main input device control
C	-QA6, Pre-charging contactor coil	D	-QA3, Mains contactor coil
E	I/O and Relay Option	F	Short-circuit protected supply

9.3.8 The Pre-charging Function

To avoid high inrush current to drive capacitors, pre-charge the drive before switching on main power.

The pre-charging function uses AFE control unit I/Os and relays. Pre-charging can be operated either locally (manually or automatically) or remotely (manually). The pre-charging circuit is protected by fuses installed in the fuse base (AE10, E10) or the fuse switch (AE11, IE11). Check that the mains 0-enable switch is in the 0 position. With 590 A drives and larger, close the pre-charging fuse switch (-QB6). After that, if the drive has a main switch (-QB0), close it. Check that all miniature circuit breakers are closed.

Manual operation

Turn the pre-charging MAN-AUTO switch (-SF12) to the manual position. Turn the mains 0-enable switch (-SF11) to the enable position. Pre-charging starts by pressing the *Run* button on the control panel of the AFE module. The pre-charging contactor closes. When pre-charging is done, the main input device closes and the pre-charging contactor opens. Perform pre-charging again after a power outage.

Automatic operation

Pre-charging starts automatically when pre-charging is enabled with mains 0-enable switch and pre-charging MAN-AUTO switch is in the auto position. The pre-charging contactor closes. When pre-charging is done, the main input device closes and the pre-charging contactor opens. Pre-charging is performed automatically after a power outage.

Remote operation

Turn the pre-charging MAN-AUTO switch to the manual position. Turn the mains 0-enable switch to the enable position. Pre-charging starts by activating Digital Input 1. The AFE starts and the pre-charging contactor closes. When pre-charging is done, the main input device closes and the pre-charging contactor opens. Perform pre-charging again after a power outage.

9.4 Options

9.4.1 Available Options for the Enclosed Drives

Table 31: Options for the Enclosed Drives

Option group	Plus code	Description
Input options	+GACO	Mains contactor
	+GAMS	Main switch
	+GACB	Air circuit breaker fixed
Grounding device	+GCEP	Provision for grounding device
	+GCES	Grounding switch
Motor heater control	+IAMH	Motor heater control
Cabinet heater	+IBCH	Cabinet heater
Motor fan control	+ICFC	Motor fan control
	+ICF1	Motor fan ctrl/supply 2.5–4 A
	+ICF2	Motor fan ctrl/supply 4–6.3 A
	+ICF3	Motor fan ctrl/supply 6.3–10 A
	+ICF4	Motor fan ctrl/supply 10–16 A
Motor brake control	+IDBC	Motor brake control

Danfoss Drives Oy © 2026.06

Table 31: Options for the Enclosed Drives - (continued)

Option group	Plus code	Description
24 V DC power supply	+IFCS	24 V DC power supply
Service socket	+IGS0	230 V AC socket CEE 7/3
Cabinet options power supply	+IHAT	Auxiliary AC voltage transformer
	+IHAS	Auxiliary AC supply terminals
Door signal lights	+IICD	Run, ready, fault
Emergency stop	+ILSS	STO/SS1 push button on door
Mains cabling direction	+KCIB	Bottom-entry
	+KCIT	Top-entry
Motor cabling direction	+KDOB	Bottom-entry
	+KDOT	Top-entry
Cable entry plate	+KFCP	Plate with no holes
Output filter	+MAC2	Common-mode Filter
	+MAU1	dU/dt Filter
	+MAU2	dU/dt Filter w/ CM filter
Additional cabinets	+NAR4	Empty 400 mm cabinet, right side of the drive
	+NAR6	Empty 600 mm cabinet, right side of the drive
	+NAR8	Empty 800 mm cabinet, right side of the drive
	+NAL4	Empty 400 mm cabinet, left side of the drive
	+NAL6	Empty 600 mm cabinet, left side of the drive
	+NAL8	Empty 800 mm cabinet, left side of the drive
Cooling options	+OABC	Back-channel cooling
	+OAOF	Cooling air output flange
Power unit lifting	+QALS	Lifting support for power unit
Marine Construction	+AFMC	Marine Construction
Shipping package	+TAWP	Wooden package
	+TASE	Sea container package

9.4.2 Air Circuit Breaker (+GACB)

At the factory, the network frequency of the circuit breaker trip unit is set to 50 Hz. If the network frequency is 60 Hz, the circuit breaker must be adjusted. Otherwise, the protection functions do not work correctly. Do not change the settings when the main supply is on.

NOTE: Do not operate the air circuit breaker directly from the ON/OFF push buttons on the air circuit breaker. If necessary, these buttons can be locked with a padlock with a maximum dimension of 8 mm.

Circuit breakers with a DIP switch-type trip unit:

- Select the correct network frequency with the DIP switch.

Circuit breakers with a touch screen:

1. Connect a USB-C cable between a laptop and the circuit breaker and the touch screen.
2. Navigate from the Home page to Settings -> Configuration -> Main Frequency.

   The default PIN code to access the configuration settings is 000001.
3. Change the main frequency.
4. Confirm the changes.
5. Check that the frequency is updated in the upper part of the touch screen.

9.4.3 Grounding Switch (+GCES)

⚠ WARNING

GROUNDING SWITCH OPTION

The grounding switch does not ground the upstream circuit of the air circuit breaker.

- Follow the local safety rules and regulations when operating the grounding switch.

The grounding switch option is used for work grounding during service of the enclosed drive.

The positions of the grounding switch:

- OFF. The handle is in the horizontal position.
- ⏚ = Main circuit of the enclosed drive is connected to ground. The handle is in the vertical position.

It is possible to lock the handle of the grounding switch into each of the positions with a padlock.

The simultaneous closing of the air circuit breaker and the grounding switch is prevented by electrical interlocking. The air circuit breaker is equipped with an undervoltage coil that is de-energized when the grounding switch is in the ⏚ position. The grounding switch is equipped with a locking coil which prevents the closing of the grounding switch when the air circuit breaker is closed.

When the grounding switch is in the ⏚ position, it is not possible to pre-charge the AFE module.

The auxiliary control voltage must be on when operating the grounding switch. When the grounding switch is interlocked, turning the handle can damage the grounding switch.

For more details, see the circuit diagrams delivered with the product.

9.4.4 STO/SS1 Push Button on Door (+ILSS)

The STO inputs are wired to the (-SFG) emergency stop push button on the control compartment door. External emergency stop push buttons can be connected to the same circuit.

See more information in the *iC7 Series Emergency Stop Button (+ILSS) Operating Guide, Enclosed Drives*.

9.4.5 Auxiliary AC supply (+IHAS)

A product with a maximum of 5 cabinet sections:

The Auxiliary AC supply (+IHAS) cable must be short-circuit and overload protected with a 16-A 2-pole C-curve miniature circuit breaker. In UL installations, the Auxiliary AC supply cable must be protected with a UL 489 16-A branch-circuit 2-pole miniature circuit breaker. The power requirement for the Auxiliary AC supply is a maximum of 1700 W.

A product with more than 5 cabinet sections:

The Auxiliary AC supply (+IHAS) cable must be short-circuit and overload protected with a 25-A 2-pole C-curve miniature circuit breaker. In UL installations, the Auxiliary AC supply cable must be protected with a UL 489 25-A branch-circuit 2-pole miniature circuit breaker. The power requirement for the Auxiliary AC supply is a maximum of 2000 W.

Danfoss Drives Oy © 2026.06

9.4.6 Motor Fan Control/Supply (+ICF1, +ICF2, +ICF3, +ICF4)

Motor fan control/supply (+ICF1, +ICF2, +ICF3, +ICF4) supply cable must be short-circuit protected according to the local regulations.

Protect the supply with an aM/gG fuse if the short circuit current is above these values:

- 690 V: above 3 kA
- 500 V: above 20 kA
- 440 V: above 30 kA
- 400 V: no limit

Table 32: Selecting the Fuse, IEC

Option	Fuse type	Maximum fuse rating
+ICF1, +ICF2, +ICF3	gG/aM	16 A
+ICF4	gG/aM	25 A

Table 33: Selecting the Fuse, UL

Option	Fuse type	Maximum fuse rating
+ICF1	Class J	15 A
+ICF2, +ICF3, +ICF4	Class J or R	25 A

9.5 Cable Sizes

9.5.1 General Cable Size Information

The IEC cable sizing is based on these conditions:

- Ambient temperature of 40 °C (104 °F).
- Cables laid side by side on cable ladders.
- Maximum 9 cables per ladder.
- 3 ladders on top of each other.
- XLPE insulated cables, with a maximum conductor temperature of 90 °C (194 °F).

In other conditions, refer to the local safety regulations, the input voltage, and the load current of the drive.

The UL cable sizing is based on these conditions:

- Ambient temperature of 40 °C (104 °F).
- 75 °C (167 °F) rated copper cables.
- Multicore cables installed in cable ducts.
  - If cable ducts are not used, keep sufficient spacing between the cables.
  - Do not stack or bundle the cables without proper spacing for longer than 600 mm (24 in).

In other conditions, refer to the local safety regulations, the input voltage, and the load current of the drive.

It is possible to use M12 cable lugs for the mains cables.

NOTICE

Use symmetrical cabling with system modules connected in parallel. Each module must have the same number of cables with an equal cross-section.

The cable size tables for the enclosed drives can be found with these links.

- 9.5.2 Mains Cable Size Recommendations, 380–500 V
- 9.5.3 Motor Cable Size Recommendations, 380–500 V
- 9.5.4 Mains Cable Size Recommendations, UL, 480 V
- 9.5.5 Motor Cable Size Recommendations, UL 480 V
- 9.5.6 Mains Cable Size Recommendations, 525–690 V
- 9.5.7 Motor Cable Size Recommendations, 525–690 V
- 9.5.8 Brake Cable Size Recommendations
- 9.5.9 Brake Cable Size Recommendations, UL

9.5.2 Mains Cable Size Recommendations, 380–500 V

Table 34: Mains Cable Size Recommendations, 380–500 V

Model code[1]	Frame	I_N [A]	Cable [mm^2]	Maximum cable size [mm^2]	Maximum number of mains cables[2]	Hole size of the mains terminal [mm]	Number of grounding holes on PE busbar	Hole size of the grounding terminal [mm]
iC7-60EA3N05-206A	FE9[3]	206	Cu 1 x (3x70+35) Al 1 x (3x120+41 Cu)	120 Cu/Al	2	Ø10.5	2	Ø10.5
iC7-60EA3N05-245A		245	Cu 1 x (3x95+50) Al 2 x (3x70+35 Cu)	120 Cu/Al	2	Ø10.5	2	Ø10.5
iC7-60EA3N05-302A		302	Cu 1 x (3x120+70) Al 2 x (3x95+29 Cu)	120 Cu/Al	2	Ø10.5	2	Ø10.5
iC7-60EA3N05-385A		385	Cu 2 x (3x95+50) Al 2 x (3x120+41 Cu)	120 Cu/Al	2	Ø10.5	2	Ø10.5
iC7-60EA3N05-480A	FE10[3]	480	Cu 2 x (3x120+70) Al 2 x (2x185+57 Cu)	240 Cu/120 Al	2	Ø13.5	4	Ø10.5
iC7-60EA3N05-588A		588	Cu 2 x (3x150+70) Al 2 x (3x240+41 Cu)	240 Cu/120 Al	2	Ø13.5	4	Ø10.5
iC7-60EA3x05-385A	AE10 + IE10[4]	325	Cu 1 x (3x150+70) Al 2 x (3x95+29 Cu)	240 Cu/Al	2[5]	Ø13.5[6]	4	Ø10.5
iC7-60EA3x05-480A		403	Cu 2 x (3x95+ 50) Al 2 x (3x120+41 Cu)	240 Cu/Al	2[5]	Ø13.5[6]	4	Ø10.5
iC7-60EA3x05-590A		508	Cu 2 x (3x120+70) Al 2 x (3x150+41 Cu)	240 Cu/Al	2[5]	Ø13.5[6]	4	Ø10.5
iC7-60EA3x05-658A	AE11 + IE11	571	Cu 2 x (3x150+70) Al 3 x (3x120+41 Cu)	240 Cu/Al	4	Ø13	5	Ø10.5
iC7-60EA3x05-730A		647	Cu 3 x (3x120+70) Al 3 x (3x150+70 Cu)	240 Cu/Al	4	Ø13	5	Ø10.5
iC7-60EA3x05-820A		728	Cu 3 x (3x120+70) Al 4 x (3x120+41 Cu)	240 Cu/Al	4	Ø13	5	Ø10.5
iC7-60EA3x05-880A		809	Cu 3 x (3x150+70) Al 4 x (3x120+41 Cu)	240 Cu/Al	4	Ø13	5	Ø10.5

Danfoss Drives Oy © 2026.06

Table 34: Mains Cable Size Recommendations, 380–500 V - (continued)

Model code[1]	Frame	I_N [A]	Cable [mm^2]	Maximum cable size [mm^2]	Maximum number of mains cables[2]	Hole size of the mains terminal [mm]	Number of grounding holes on PE busbar	Hole size of the grounding terminal [mm]
iC7-60EA3x05-1000	2 x AE10 + 2 x IE10	905	Cu 4 x (3x120+70) Al 4 x (3x185+57 Cu)	240 Cu/Al	6	Ø13	5	Ø10.5
iC7-60EA3x05-1100		1018	Cu 4 x (3x150+70) Al 6x (3 x 150 + 41 Cu)	240 Cu/Al	6	Ø13	5	Ø10.5
iC7-60EA3x05-1260	2 x AE11 + 2 x IE11	1148	Cu 6 x (3x95+50) Al 6 x (3x120+41 Cu)	240 Cu/Al	8	Ø13	8	Ø10.5
iC7-60EA3x05-1450		1293	Cu 6 x (3x120+70) Al 6 x (3x150+70 Cu)	240 Cu/Al	8	Ø13	8	Ø10.5
iC7-60EA3x05-1710		1453	Cu 6 x (3x150+70) Al 6 x (3x185+57 Cu)	240 Cu/Al	8	Ø13	8	Ø10.5
iC7-60EA3x05-1960	3 x AE11 + 3 x IE11	1777	Cu 6 x (3 x 185 + 95) Al 9 x (3 x 185 + 41 Cu)	240 Cu/Al	12	Ø13	8	Ø10.5
iC7-60EA3x05-2150		1938	Cu 9 x (3 x 120 + 70) Al 9 x (3 x 185 + 41 Cu)	240 Cu/Al	12	Ø13	8	Ø10.5
iC7-60EA3x05-2510		2261	Cu 9 x (3 x 185 + 95) Al 9 x (3 x 240 + 72 Cu)	240 Cu/Al	12	Ø13	8	Ø10.5

1) Model codes starting with iC7-60EA3x can be iC7-60EA3A or iC7-60EA3H.

2) Cable lugs installed on both sides of the fixing hole

3) With copper cables, use copper lugs. With aluminum cables, use bimetallic lugs.

4) Use bimetallic lugs. No direct aluminum contact to the mains terminals.

5) If the option Top-entry +KCIT is used, the maximum number of mains cables is 4.

6) If the option Top-entry +KCIT is used, the hole size is 13 mm.

9.5.3 Motor Cable Size Recommendations, 380–500 V

Table 35: Motor Cable Size Recommendations, 380–500 V

Model code[1]	Frame	I_N [A]	Cable [mm²]	Maximum cable size [mm²][2]	Maximum number of motor cables	Bolt size[3]	Number of grounding holes on PE busbar	Hole size of the grounding terminal [mm]
iC7-60EA3N05-206A	FE9	206	Cu 1 x (3x70+35) Al 1 x (3x120+41 Cu)	95 Cu/Al[4]	2[5]	M10	2	Ø10.5
iC7-60EA3N05-245A		245	Cu 1 x (3x95+50) Al 1 x (3x150+41 Cu)	95 Cu/Al[4]	2[5]	M10	2	Ø10.5
iC7-60EA3N05-302A		302	Cu 1 x (3x120+70) Al 2 x (3x95+29 Cu)	95 Cu/Al[4]	2[5]	M10	2	Ø10.5
iC7-60EA3N05-385A		385	Cu 2 x (3x95+50) Al 2 x (3x120+41 Cu)	95 Cu/Al[4]	2[5]	M10	2	Ø10.5
iC7-60EA3N05-480A	FE10	480	Cu 2 x (3x120+70) Al 2 x (2x185+57 Cu)	150 Cu/120 Al[4]	3[5]	M10	4	Ø10.5
iC7-60EA3N05-588A		588	Cu 2 x (3x150+70) Al 2 x (3x240+41 Cu)	150 Cu/120 Al[4]	3[5]	M10	4	Ø10.5
iC7-60EA3x05-385A	AE10 + IE10	394	Cu 1 x (3x185+95) Al 2 x (3x120+41 Cu)	240 Cu/Al	4[5]	M10	4	Ø10.5
iC7-60EA3x05-480A		490	Cu 2 x (3x120+70) Al 2 x (3x150+70 Cu)	240 Cu/Al	4[5]	M10	4	Ø10.5
iC7-60EA3x05-590A		601	Cu 2 x (3x150+70) Al 2 x (3x185+57 Cu)	240 Cu/Al	4[5]	M10	4	Ø10.5
iC7-60EA3x05-658A	AE11 + IE11	672	Cu 2 x (3x185+95) Al 3 x (3x150+70 Cu)	240 Cu/Al	4	M10	4	Ø10.5
iC7-60EA3x05-730A		746	Cu 3 x (3x150+70) Al 4 x (3x120+41 Cu)	240 Cu/Al	4	M10	4	Ø10.5
iC7-60EA3x05-820A		838	Cu 3 x (3x150+70) Al 4 x (3x150+70 Cu)	240 Cu/Al	4	M10	4	Ø10.5
iC7-60EA3x05-880A		899	Cu 4 x (3x120+70) Al 4 x (3x150+70 Cu)	240 Cu/Al	4	M10	4	Ø10.5
iC7-60EA3x05-1000	2 x AE10 + 2 x IE10	1021	Cu 4 x (3x150+70) Al 6 x (3x120+41 Cu)	240 Cu/Al	8	M10	8	Ø10.5
iC7-60EA3x05-1100		1123	Cu 4 x (3x185+95) Al 6 x (3x120+41 Cu)	240 Cu/Al	8	M10	8	Ø10.5
iC7-60EA3x05-1260	2 x AE11 + 2 x IE11	1287	Cu 6 x (3x120+70) Al 6 x (3x150+70 Cu)	240 Cu/Al	8	M10	8	Ø10.5
iC7-60EA3x05-1450		1481	Cu 6 x (3x150+70) Al 6 x (3x185+57 Cu)	240 Cu/Al	8	M10	8	Ø10.5
iC7-60EA3x05-1710		1746	Cu 6 x (3x185+95) Al 8 x (3x150+70 Cu)	240 Cu/Al	8	M10	8	Ø10.5

Danfoss Drives Oy © 2026.06

Table 35: Motor Cable Size Recommendations, 380–500 V - (continued)

Model code[1]	Frame	I_N [A]	Cable [mm²]	Maximum cable size [mm²][2]	Maximum number of motor cables	Bolt size[3]	Number of grounding holes on PE busbar	Hole size of the grounding terminal [mm]
iC7-60EA3x05-1960	3 x AE11 + 3 x IE11	2001	Cu 9 x (3 x 150 + 70) Al 12 x (3 x 150 + 41 Cu)	240 Cu/Al	12	M10	8	Ø10.5
iC7-60EA3x05-2150		2195	Cu 9 x (3 x 150 + 70) Al 12 x (3 x 150 + 41 Cu)	240 Cu/Al	12	M10	8	Ø10.5
iC7-60EA3x05-2510		2563	Cu 9 x (3 x 185 + 95) Al 12 x (3 x 185 + 57 Cu)	240 Cu/Al	12	M10	8	Ø10.5

1) Model codes starting with iC7-60EA3x can be iC7-60EA3A or iC7-60EA3H.

2) With the vertical PE busbar extension installed: 20 x Ø6.5 mm or 16 x Ø6.5 mm + 4 x Ø10.5 mm

3) If the option Top-entry +KDOT is used, the bolt size is M13.

4) If the option Top-entry +KDOT is used, the maximum cable size is 240 mm².

5) If the option Top-entry +KDOT is used, the maximum number of motor cables is 4.

9.5.4 Mains Cable Size Recommendations, UL, 480 V

Table 36: Mains Cable Size Recommendations, UL, 480 V

Model code[1]	Frame	I_N [A]	Mains cable [AWG]	Cable termination, Panduit terminal part number	Maximum cable size	Maximum number of mains cables[2] (hole size of the mains terminal [mm])	Number of grounding holes on PE busbar (hole size [mm])
iC7-60EA3N05-206A	FE9	206	2 x 1/0	LCAX1/0-12-X	300 MCM	2 (Ø10.5)	2 (Ø10.5)
iC7-60EA3N05-245A		245	2 x 2/0	LCAX2/0-12-X	300 MCM	2 (Ø10.5)	2 (Ø10.5)
iC7-60EA3N05-302A		302	2 x 4/0	LCAX4/0-12-X	300 MCM	2 (Ø10.5)	2 (Ø10.5)
iC7-60EA3N05-385A		385	2 x 300 MCM	LCAX300-12-6	300 MCM	2 (Ø10.5)	2 (Ø10.5)
iC7-60EA3N05-480A	FE10	480	3 x 4/0	LCAX4/0-12-X	300 MCM	3 (Ø13.5)	4 (Ø10.5)
iC7-60EA3N05-588A		588	3 x 300 MCM	LCAX300-12-6	300 MCM	3 (Ø13.5)	4 (Ø10.5)
iC7-60EA3x05-385A	AE10 + IE10	303	2 x 4/0	LCAX4/0-12-X	500 MCM	- (Ø13.5)	4 (Ø10.5)
iC7-60EA3x05-480A		352	2 x 250 MCM	LCAX250-12-X	500 MCM	- (Ø13.5)	4 (Ø10.5)
iC7-60EA3x05-590A		451	3 x 4/0	LCAX4/0-12-X	500 MCM	- (Ø13.5)	4 (Ø10.5)

Table 36: Mains Cable Size Recommendations, UL, 480 V - (continued)

Model code[1]	Frame	I_N [A]	Mains cable [AWG]	Cable termination, Panduit terminal part number	Maximum cable size	Maximum number of mains cables[2] (hole size of the mains terminal [mm])	Number of grounding holes on PE busbar (hole size [mm])
iC7-60EA3x05-658A	AE11 + IE11	500	3 x 250 MCM	LCAX250-12-X	500 MCM	4 (Ø10.5)	5 (Ø10.5)
iC7-60EA3x05-730A		554	3 x 300 MCM	LCAX300-12-6	500 MCM	4 (Ø10.5)	5 (Ø10.5)
iC7-60EA3x05-820A		604	3 x 350 MCM	LCAX350-12-6	500 MCM	4 (Ø10.5)	5 (Ø10.5)
iC7-60EA3x05-880A		704	4 x 250 MCM	LCAX250-12-X	500 MCM	4 (Ø10.5)	5 (Ø10.5)
iC7-60EA3x05-1000	2 x AE10 + 2 x IE10	755	4 x 300 MCM	LCAX300-12-6	500 MCM	4 (Ø10.5)	5 (Ø10.5)
iC7-60EA3x05-1100		855	4 x 350 MCM	LCAX350-12-6	500 MCM	4 (Ø10.5)	5 (Ø10.5)
iC7-60EA3x05-1260	2 x AE11 + 2 x IE11	955	6 x 4/0	LCAX4/0-12-X	500 MCM	8 (Ø10.5)	8 (Ø10.5)
iC7-60EA3x05-1450		1106	6 x 300 MCM	LCAX300-12-6	500 MCM	8 (Ø10.5)	8 (Ø10.5)
iC7-60EA3x05-1710		1306	6 x 350 MCM	LCAX350-12-6	500 MCM	8 (Ø10.5)	8 (Ø10.5)
iC7-60EA3x05-1960	3 x AE11 + 3 x IE11	1777	9 x 300MCM	LCAX300-12-6	500 MCM	12 (Ø10.5)	8 (Ø10.5)
iC7-60EA3x05-2150		1938	9 x 350MCM	LCAX350-12-6	500 MCM	12 (Ø10.5)	8 (Ø10.5)
iC7-60EA3x05-2510		2261	12 x 300MCM	LCAX300-12-6	500 MCM	12 (Ø10.5)	8 (Ø10.5)

1) Model codes starting with iC7-60EA3x can be iC7-60EA3A or iC7-60EA3H.

2) Cable lugs installed on both sides of the fixing hole

Danfoss Drives Oy © 2026.06

9.5.5 Motor Cable Size Recommendations, UL 480 V

Table 37: Motor Cable Size Recommendations, UL 480 V

Model code[1]	Frame	I_N [A]	Motor cable [AWG]	Cable termination, Panduit terminal part number	Maximum cable size	Maximum number of motor cables (bolt size)	Number of grounding holes on PE busbar (hole size [mm])[2]
iC7-60EA3N05-206A	FE9	206	2 x 1/0	LCAX300-12-6	300 MCM	2 (M10)	2 (Ø10.5)
iC7-60EA3N05-245A		245	2 x 2/0	LCAX300-12-6	300 MCM	2 (M10)	2 (Ø10.5)
iC7-60EA3N05-302A		302	2 x 4/0	LCAX300-12-6	300 MCM	2 (M10)	2 (Ø10.5)
iC7-60EA3N05-385A		385	2 x 300 MCM	LCAX300-12-6	300 MCM	2 (M10)	2 (Ø10.5)
iC7-60EA3N05-480A	FE10	480	3 x 4/0	LCAX300-12-6	300 MCM	3 (M10)	4 (Ø10.5)
iC7-60EA3N05-588A		588	3 x 300 MCM	LCAX300-12-6	300 MCM	3 (M10)	4 (Ø10.5)
iC7-60EA3x05-385A	AE10 + IE10	372	2 x 300 MCM	LCAX300-12-6	500 MCM	4 (M10)	4 (Ø10.5)
iC7-60EA3x05-480A		466	3 x 4/0	LCAX4/0-12-X	500 MCM	4 (M10)	4 (Ø10.5)
iC7-60EA3x05-590A		531	3 x 250 MCM	LCAX250-12-X	500 MCM	4 (M10)	4 (Ø10.5)
iC7-60EA3x05-658A	AE11 + IE11	603	3 x 350 MCM	LCAX350-12-6	500 MCM	4 (M10)	4 (Ø10.5)
iC7-60EA3x05-730A		672	4 x 250 MCM	LCAX250-12-X	500 MCM	4 (M10)	4 (Ø10.5)
iC7-60EA3x05-820A		746	4 x 300 MCM	LCAX300-12-6	500 MCM	4 (M10)	4 (Ø10.5)
iC7-60EA3x05-880A		838	4 x 350 MCM	LCAX350-12-6	500 MCM	4 (M10)	4 (Ø10.5)
iC7-60EA3x05-1000	2 x AE10 + 2 x IE10	940	6 x 4/0	LCAX4/0-12-X	500 MCM	8 (M10)	8 (Ø10.5)
iC7-60EA3x05-1100		1052	6 x 250 MCM	LCAX250-12-X	500 MCM	8 (M10)	8 (Ø10.5)
iC7-60EA3x05-1260	2 x AE11 + 2 x IE11	1174	6 x 300 MCM	LCAX300-12-6	500 MCM	8 (M10)	8 (Ø10.5)
iC7-60EA3x05-1450		1328	8 x 250 MCM	LCAX250-12-X	500 MCM	8 (M10)	8 (Ø10.5)
iC7-60EA3x05-1710		1603	8 x 300 MCM	LCAX300-12-6	500 MCM	8 (M10)	8 (Ø10.5)

Table 37: Motor Cable Size Recommendations, UL 480 V - (continued)

Model code[1]	Frame	I_N [A]	Motor cable [AWG]	Cable termination, Panduit terminal part number	Maximum cable size	Maximum number of motor cables (bolt size)	Number of grounding holes on PE busbar (hole size [mm])[2]
iC7-60EA3x05-1960	3 x AE11 + 3 x IE11	1940	9 x 350 MCM	LCAX350-12-6	500 MCM	12 (M10)	8 (Ø10.5)
iC7-60EA3x05-2150		2083	12 x 250 MCM	LCAX250-12-X	500 MCM	12 (M10)	8 (Ø10.5)
iC7-60EA3x05-2340		2195	12 x 300 MCM	LCAX300-12-6	500 MCM	12 (M10)	8 (Ø10.5)
iC7-60EA3x05-2510		2389	12 x 300 MCM	LCAX300-12-6	500 MCM	12 (M10)	8 (Ø10.5)

1) Model codes starting with iC7-60EA3x can be iC7-60EA3A or iC7-60EA3H.

2) With the vertical PE busbar extension installed: 20 x Ø6.5 mm or 16 x Ø6.5 mm + 4 x Ø10.5 mm

9.5.6 Mains Cable Size Recommendations, 525–690 V

Table 38: Mains Cable Size Recommendations, 525–690 V

Model code[1]	Frame	I_N [A]	Cable [mm^2]	Maximum cable size [mm^2]	Maximum number of mains cables[2]	Hole size of the mains terminal [mm]	Number of grounding holes on PE busbar	Hole size of the grounding terminal [mm]
iC7-60EA3x07-261A	AE10 + IE10[3]	235	Cu 1x (3 x 150 + 70) Al 1x (3 x 240 + 72)	240 Cu/Al	2[4]	Ø13.5[5]	4	Ø10.5
iC7-60EA3x07-325A		295	Cu 2x (3 x 70 + 35) Al 2x (3 x 120 + 41)	240 Cu/Al	2[4]	Ø13.5[5]	4	Ø10.5
iC7-60EA3x07-365A		332	Cu 2x (3 x 95+ 50) Al 2x (3 x 120 + 41)	240 Cu/Al	2[4]	Ø13.5[5]	4	Ø10.5
iC7-60EA3x07-416A		375	Cu 2x (3 x 95+ 50) Al 2x (3 x 150 + 41)	240 Cu/Al	2[4]	Ø13.5[5]	4	Ø10.5
iC7-60EA3x07-465A	AE11 + IE11[3]	422	Cu 2x (3 x 120 + 70) Al 2x (3 x 185 + 57)	240 Cu/Al	2[4]	Ø13.5[5]	4	Ø10.5
iC7-60EA3x07-525A		470	Cu 2x (3 x 150 + 70) Al 2x (3 x 240 + 72)	240 Cu/Al	2[4]	Ø13.5[5]	4	Ø10.5
iC7-60EA3x07-590A		526	Cu 2x (3 x 185+ 95) Al –[6]	240 Cu/Al	2[4]	Ø13.5[5]	4	Ø10.5
iC7-60EA3x07-650A	2 x AE10 + 2 x IE10	591	Cu 3x (3 x 120 + 70) Al 4x (3 x 120 + 41)	240 Cu/Al	4	Ø13	5	Ø10.5
iC7-60EA3x07-730A		666	Cu 4x (3 x 95+ 50) Al 4x (3 x 120 + 41)	240 Cu/Al	4	Ø13	5	Ø10.5
iC7-60EA3x07-820A		751	Cu 4x (3 x 95+ 50) Al 4x (3 x 150 + 41)	240 Cu/Al	4	Ø13	5	Ø10.5

Danfoss Drives Oy © 2026.06

Table 38: Mains Cable Size Recommendations, 525–690 V - (continued)

Model code[1]	Frame	I_N [A]	Cable [mm²]	Maximum cable size [mm²]	Maximum number of mains cables[2]	Hole size of the mains terminal [mm]	Number of grounding holes on PE busbar	Hole size of the grounding terminal [mm]
iC7-60EA3x07-945A	2 x AE11 + 2 x IE11	843	Cu 4x (3 x 120 + 70) Al 4x (3 x 185 + 57)	240 Cu/Al	4	Ø13	5	Ø10.5
iC7-60EA3x07-1060		937	Cu 4x (3 x 150 + 70) Al 4x (3 x 240 + 72)	240 Cu/Al	6	Ø13	8	Ø10.5
iC7-60EA3x07-1180		1031	Cu 4x (3 x 185+ 95) Al 4x (3 x 240 + 72)	240 Cu/Al	6	Ø13	8	Ø10.5
iC7-60EA3x07-1300	3 x AE11 + 3 x IE11	1124	Cu 6x (3 x 95+ 50) Al 6x (3 x 150 + 41)	240 Cu/Al	8	Ø13	8	Ø10.5
iC7-60EA3x07-1500		1312	Cu 4x (3 x 240 + 120) Al 6x (3 x 185 + 57)	240 Cu/Al	8	Ø13	8	Ø10.5
iC7-60EA3x07-1770		1498	Cu 6x (3 x 150 + 70) Al 6x (3 x 240 + 72)	240 Cu/Al	8	Ø13	8	Ø10.5

1) Model codes starting with iC7-60EA3x can be iC7-60EA3A or iC7-60EA3H.

2) Cable lugs installed on both sides of the fixing hole.

3) Use bimetallic lugs. No direct aluminum contact to the mains terminals.

4) If the option Top-entry +KCIT is used, the maximum number of mains cables is 4.

5) If the option Top-entry +KCIT is used, the hole size is 13 mm.

6) The product variant does not fulfill the supply cable amount requirements of the IEC61800-5-1 for Al cabling at the nominal ambient temperature with a x1.25 current. The IEC 60364-5-52 cable dimensioning is not possible according to the conditions listed in the beginning of this chapter. If ambient temperature is lower, or fewer cables are set on the ladder, and so on, this might be possible but must be considered case by case.

9.5.7 Motor Cable Size Recommendations, 525–690 V

Table 39: Motor Cable Size Recommendations, 525–690 V

Model code[1]	Frame	I_N [A]	Cable [mm²]	Maximum cable size [mm²]	Maximum number of motor cables	Bolt size[2]	Number of grounding holes on PE busbar	Hole size of the grounding terminal [mm]
iC7-60EA3x07-261A	AE10 + IE10	267	Cu 1x (3 x 185+ 95) Al 2x (3 x 95 + 29)	240 Cu/Al	4	M10	4	Ø10.5
iC7-60EA3x07-325A		332	Cu 2x (3 x 95+ 50) Al 2x (3 x 120 + 41)	240 Cu/Al	4	M10	4	Ø10.5
iC7-60EA3x07-365A		373	Cu 2x (3 x 95+ 50) Al 2x (3 x 150 + 41)	240 Cu/Al	4	M10	4	Ø10.5
iC7-60EA3x07-416A		425	Cu 2x (3 x 120 + 70) Al 2x (3 x 185 + 57)	240 Cu/Al	4	M10	4	Ø10.5
iC7-60EA3x07-465A	AE11 + IE11	475	Cu 2x (3 x 150 + 70) Al 2x (3 x 240 + 72)	240 Cu/Al	4	M10	4	Ø10.5
iC7-60EA3x07-525A		537	Cu 2x (3 x 185+ 95) Al 3x (3 x 150 + 41)	240 Cu/Al	4	M10	4	Ø10.5
iC7-60EA3x07-590A		603	Cu 2x (3 x 240 + 120) Al 3x (3 x 185 + 57)	240 Cu/Al	4	M10	4	Ø10.5

Table 39: Motor Cable Size Recommendations, 525–690 V - (continued)

Model code[1]	Frame	I_N [A]	Cable [mm²]	Maximum cable size [mm²]	Maximum number of motor cables	Bolt size[2]	Number of grounding holes on PE busbar	Hole size of the grounding terminal [mm]
iC7-60EA3x07-650A	2 x AE10 + 2 x IE10	664	Cu 2x (3 x 240 + 120) Al 4x (3 x 120 + 41)	240 Cu/Al	8	M10	8	Ø10.5
iC7-60EA3x07-730A		746	Cu 4x (3 x 95+ 50) Al 4x (3 x 150 + 41)	240 Cu/Al	8	M10	8	Ø10.5
iC7-60EA3x07-820A		838	Cu 4x (3 x 120 + 41) Al 4x (3 x 185 + 57)	240 Cu/Al	8	M10	8	Ø10.5
iC7-60EA3x07-945A	2 x AE11 + 2 x IE11	965	Cu 4x (3 x 150 + 70) Al 4x (3 x 240 + 72)	240 Cu/Al	8	M10	8	Ø10.5
iC7-60EA3x07-1060		1083	Cu 4x (3 x 185+ 95) Al 6x (3 x 150 + 41)	240 Cu/Al	8	M10	8	Ø10.5
iC7-60EA3x07-1180		1205	Cu 4x (3 x 240 + 120) Al 6x (3 x 185 + 57)	240 Cu/Al	8	M10	8	Ø10.5
iC7-60EA3x07-1300	3 x AE11 + 3 x IE11	1328	Cu 6x (3 x 150 + 70) Al 6x (3 x 240 + 72)	240 Cu/Al	12	M10	12	Ø10.5
iC7-60EA3x07-1500		1532	Cu 6x (3 x 185+ 95) Al 9x (3 x 150 + 41)	240 Cu/Al	12	M10	12	Ø10.5
iC7-60EA3x07-1770		1807	Cu 6x (3 x 240 + 120) Al 9x (3 x 185 + 57)	240 Cu/Al	12	M10	12	Ø10.5

1) Model codes starting with iC7-60EA3x can be iC7-60EA3A or iC7-60EA3H.

2) If the option Top-entry +KDOT is used, the bolt size is M13.

9.5.8 Brake Cable Size Recommendations

Table 40: Brake Cable Size Recommendations, 380–500 V

Model code	Frame	I_N [A]	Cable [mm²]	Maximum cable size [mm²]	Maximum number of brake cables	Bolt size
iC7-60EA3N05-206A	FE9	206	Cu 70 Al 120	120	2 per polarity	M10
iC7-60EA3N05-245A		245	Cu 95 Al 150	120	2 per polarity	M10
iC7-60EA3N05-302A		302	Cu 120 Al 2 x 95	120	2 per polarity	M10
iC7-60EA3N05-385A		385	Cu 2 x 95 Al 2 x 120	120	2 per polarity	M10
iC7-60EA3N05-480A	FE10	480	Cu 2 x (3x120+70) Al 2 x (2x185+57 Cu)	240	2	M10
iC7-60EA3N05-588A		588	Cu 2 x (3x150+70) Al 2 x (3x240+41 Cu)	240	2	M10

Danfoss Drives Oy © 2026.06

9.5.9 Brake Cable Size Recommendations, UL

Model code	Frame	I_N [A]	Cable AWG	Maximum cable size [mm^2]	Maximum number of brake cables	Bolt size
iC7-60EA3N 05-206A	FE9	206	2 x 4/0	4/0	2 per polarity	M10
iC7-60EA3N 05-245A		245	2 x 4/0	4/0	2 per polarity	M10
iC7-60EA3N 05-302A		302	2 x 4/0	4/0	2 per polarity	M10
iC7-60EA3N 05-385A		385	2 x 4/0	4/0	2 per polarity	M10
iC7-60EA3N 05-480A	FE10	480	2 x 400 MCM	400 MCM	2	M10
iC7-60EA3N 05-588A		588	2 x 400 MCM	400 MCM	2	M10

9.6 Fuses

9.6.1 Fuse Size Tables

The fuse size tables for the air-cooled enclosed drives can be found with these links.

- 9.6.2 AC Fuses, 380–500 V AC
- 9.6.3 DC Fuses, 465–800 V DC
- 9.6.4 AC Fuses, 525–690 V AC
- 9.6.5 DC Fuses, 640–1100 V DC
- 9.6.6 External Supply Protection for Input Devices

9.6.2 AC Fuses, 380–500 V AC

Table 41: AC Fuses, 380–500 V AC

Model code[1]	Frame	Rated current I_L [A]	Number of fuses	Fuse size	Part number	Fuse U_n [V]	Fuse I_n [A]	$I_{cp,mr}$ [A][2]
iC7-60EA3N05-206A	FE9	206	3	00	170M2619[3]	700	315	2000
iC7-60EA3N05-245A		245	3	00	170M2620[3]	700	350	2400
iC7-60EA3N05-302A		302	3	00	170M2621[3]	700	400	2800
iC7-60EA3N05-385A		385	3	00	170M9007[3]	550	475	3700
iC7-60EA3N05-480A	FE10	480	3	1	170M4016[3]	700	630	4500
iC7-60EA3N05-588A		588	3	1	170M4017[3]	700	700	5400
iC7-60EA3x05-385A	AE10 + IE10	385	3	33	PC33UD69V550TF[4]	690	550	3288
iC7-60EA3x05-480A		480	3	33	PC33UD69V700TF[4]	690	700	4822
iC7-60EA3x05-590A		590	3	33	PC33UD69V700TF[4]	690	700	4822

Table 41: AC Fuses, 380–500 V AC - (continued)

Model code[1]	Frame	Rated current I_L [A]	Number of fuses	Fuse size	Part number	Fuse U_n [V]	Fuse I_n [A]	$I_{cp,mr}$ [A][2]
iC7-60EA3x05-658A	AE11 + IE11	658	6[5]	33	PC33UD69V550TF[4]	690	550	6576
iC7-60EA3x05-730A		730	6[5]	33	PC33UD69V550TF[4]	690	550	6576
iC7-60EA3x05-820A		820	6[5]	33	PC33UD69V550TF[4]	690	550	6576
iC7-60EA3x05-880A		880	6[5]	33	PC33UD69V550TF[4]	690	550	6576
iC7-60EA3x05-1000	2 x AE10 + 2 x IE10	1000	6	33	PC33UD69V700TF[4]	690	700	–
iC7-60EA3x05-1100		1100	6	33	PC33UD69V700TF[4]	690	700	–
iC7-60EA3x05-1260	2 x AE11 + 2 x IE11	1260	12[5]	33	PC33UD69V550TF[4]	690	550	–
iC7-60EA3x05-1450		1450	12[5]	33	PC33UD69V550TF[4]	690	550	–
iC7-60EA3x05-1710		1710	12[5]	33	PC33UD69V550TF[4]	690	550	–
iC7-60EA3x05-1960	3 x AE11 + 3 x IE11	1960	18[5]	33	PC33UD69V550TF[4]	690	550	–
iC7-60EA3x05-2150		2150	18[5]	33	PC33UD69V550TF[4]	690	550	–
iC7-60EA3x05-2510		2510	18[5]	33	PC33UD69V550TF[4]	690	550	–

1) Model codes starting with iC7-60EA3x can be iC7-60EA3A or iC7-60EA3H.

2) Current, prospective, minimum rating

3) Bussmann

4) Mersen

5) Double fuse per phase

9.6.3 DC Fuses, 465–800 V DC

Table 42: DC Fuses, 465–800 V DC

Model code[1]	Frame	Rated current I_L [A]	Number of fuses	Fuse size	Part number	Fuse U_n [V]	Fuse I_n [A]
iC7-60EA3x05-385A	AE10 + IE10	385	2	73	PC73UD13C630TF	1250	630
iC7-60EA3x05-480A		480	2	73	PC73UD13C800TF	1250	800
iC7-60EA3x05-590A		590	2	73	PC73UD10C1000TF	1000	1000
iC7-60EA3x05-658A	AE11 + IE11	658	2	73	PC73UD90V13CTF	900	1250
iC7-60EA3x05-730A		730	2	73	PC73UD90V13CTF	900	1250
iC7-60EA3x05-820A		820	2	73	PC73UD85V14CTF	850	1400
iC7-60EA3x05-880A		880	2	73	PC73UD85V14CTF	850	1400
iC7-60EA3x05-1000	2 x AE10 + 2 x IE10	1000	8	73	PC73UD13C800TF	1250	800
iC7-60EA3x05-1100		1100	8	73	PC73UD10C1000TF	1000	1000
iC7-60EA3x05-1260	2 x AE11 + 2 x IE11	1260	8	73	PC73UD90V13CTF	900	1250
iC7-60EA3x05-1450		1450	8	73	PC73UD90V13CTF	900	1250
iC7-60EA3x05-1710		1710	8	73	PC73UD85V14CTF	850	1400
iC7-60EA3x05-1960	3 x AE11 + 3 x IE11	1960	12	73	PC73UD90V13CTF	900	1250
iC7-60EA3x05-2150		2150	12	73	PC73UD90V13CTF	900	1250
iC7-60EA3x05-2510		2510	12	73	PC73UD85V14CTF	850	1400

1) Model codes starting with iC7-60EA3x can be iC7-60EA3A or iC7-60EA3H.

Danfoss Drives Oy © 2026.06

9.6.4 AC Fuses, 525–690 V AC

Table 43: AC Fuses, 525–690 V AC, Mersen

Model code[1]	Frame	Rated current I_L [A]	Number of fuses	Fuse size	Mersen part number	Fuse U_n [V]	Fuse I_n [A]	Minimum $I_{cp,mr}$ [A]
iC7-60EA3x07-261A	AE10 + IE10	229	3	33	PC33UD69V550TF	690	550	3288
iC7-60EA3x07-325A		288	3	33	PC33UD69V550TF	690	550	3288
iC7-60EA3x07-365A		324	3	33	PC33UD69V550TF	690	550	3288
iC7-60EA3x07-416A		367	3	33	PC33UD69V630TF	690	630	4024
iC7-60EA3x07-465A	AE11 + IE11	413	3	33	PC33UD69V700TF	690	700	4822
iC7-60EA3x07-525A		459	3	33	PC33UD69V700TF	690	700	4822
iC7-60EA3x07-590A		514	3	33	PC33UD69V800TF	690	800	6141
iC7-60EA3x07-650A	2 x AE10 + 2 x IE10	578	6	33	PC33UD69V550TF	690	550	–
iC7-60EA3x07-730A		651	6	33	PC33UD69V550TF	690	550	–
iC7-60EA3x07-820A		734	6	33	PC33UD69V630TF	690	630	–
iC7-60EA3x07-945A	2 x AE11 + 2 x IE11	825	6	33	PC33UD69V630TF	690	630	–
iC7-60EA3x07-1060		917	6	33	PC33UD69V700TF	690	700	–
iC7-60EA3x07-1180		1009	6	33	PC33UD69V800TF	690	800	–
iC7-60EA3x07-1300	3 x AE11 + 3 x IE11	1100	9	33	PC33UD69V630TF	690	630	–
iC7-60EA3x07-1500		1284	9	33	PC33UD69V630TF	690	630	–
iC7-60EA3x07-1770		1467	9	33	PC33UD69V800TF	690	800	–

1) Model codes starting with iC7-60EA3x can be iC7-60EA3A or iC7-60EA3H.

Table 44: AC Fuses, 525–690 V AC, Eaton

Model code[1]	Frame	Rated current I_L [A]	Number of fuses	Fuse size	Eaton part number	Fuse U_n [V]	Fuse I_n [A]	Minimum $I_{cp,mr}$ [A]
iC7-60EA3x07-261A	AE10 + IE10	229	3	3	170M6458	690	500	2294
iC7-60EA3x07-325A		288	3	3	170M6458	690	500	2294
iC7-60EA3x07-365A		324	3	3	170M6460	690	630	3439
iC7-60EA3x07-416A		367	3	3	170M6460	690	630	3439
iC7-60EA3x07-465A	AE11 + IE11	413	3	3	170M6461	690	700	4069
iC7-60EA3x07-525A		459	3	3	170M6462	690	800	5158
iC7-60EA3x07-590A		514	3	3	170M6462	690	800	5158
iC7-60EA3x07-650A	2 x AE10 + 2 x IE10	578	6	3	170M6458	690	500	–
iC7-60EA3x07-730A		651	6	3	170M6460	690	630	–
iC7-60EA3x07-820A		734	6	3	170M6460	690	630	–
iC7-60EA3x07-945A	2 x AE11 + 2 x IE11	825	6	3	170M6461	690	700	–
iC7-60EA3x07-1060		917	6	3	170M6462	690	800	–
iC7-60EA3x07-1180		1009	6	3	170M6462	690	800	–

Table 44: AC Fuses, 525–690 V AC, Eaton - (continued)

Model code[1]	Frame	Rated current I_L [A]	Number of fuses	Fuse size	Eaton part number	Fuse U_n [V]	Fuse I_n [A]	Minimum $I_{cp,mr}$ [A]
iC7-60EA3x07-1300	3 x AE11 + 3 x IE11	1100	9	3	170M6460	690	630	–
iC7-60EA3x07-1500		1284	9	3	170M6461	690	700	–
iC7-60EA3x07-1770		1467	9	3	170M6462	690	800	–

1) Model codes starting with iC7-60EA3x can be iC7-60EA3A or iC7-60EA3H.

9.6.5 DC Fuses, 640–1100 V DC

Table 45: DC Fuses, 640–1100 V DC, Mersen

Model code[1]	Frame	Rated current I_L [A]	Number of fuses	Fuse size	Mersen part number	Fuse U_n [V]	Fuse I_n [A]
iC7-60EA3x07-261A	AE10 + IE10	229	2	73	PC73UD13C500TF	1250	500
iC7-60EA3x07-325A		288	2	73	PC73UD13C500TF	1250	500
iC7-60EA3x07-365A		324	2	73	PC73UD13C700TF	1250	700
iC7-60EA3x07-416A		367	2	73	PC73UD13C700TF	1250	700
iC7-60EA3x07-465A	AE11 + IE11	413	2	73	PC73UD13C800TF	1250	800
iC7-60EA3x07-525A		459	2	73	PC73UD12C900TF	1300	900
iC7-60EA3x07-590A		514	2	73	PC73UD12C900TF	1300	900
iC7-60EA3x07-650A	2 x AE10 + 2 x IE10	578	8	73	PC73UD13C500TF	1250	500
iC7-60EA3x07-730A		651	8	73	PC73UD13C700TF	1250	700
iC7-60EA3x07-820A		734	8	73	PC73UD13C700TF	1250	700
iC7-60EA3x07-945A	2 x AE11 + 2 x IE11	825	8	73	PC73UD13C800TF	1250	800
iC7-60EA3x07-1060		917	8	73	PC73UD12C900TF	1300	900
iC7-60EA3x07-1180		1009	8	73	PC73UD12C900TF	1300	900
iC7-60EA3x07-1300	3 x AE11 + 3 x IE11	1100	12	73	PC73UD13C700TF	1250	700
iC7-60EA3x07-1500		1284	12	73	PC73UD12C900TF	1300	900
iC7-60EA3x07-1770		1467	12	73	PC73UD12C900TF	1300	900

1) Model codes starting with iC7-60EA3x can be iC7-60EA3A or iC7-60EA3H.

Table 46: DC Fuses, 640–1100 V DC, Eaton

Model code[1]	Frame	Rated current I_L [A]	Number of fuses	Fuse size	Eaton part number	Fuse U_n [V]	Fuse I_n [A]
iC7-60EA3x07-261A	AE10 + IE10	229	2	3	180D6344	900	630
iC7-60EA3x07-325A		288	2	3	180D6344	900	630
iC7-60EA3x07-365A		324	2	3	180D6346	900	800
iC7-60EA3x07-416A		367	2	3	180D6346	900	800
iC7-60EA3x07-465A	AE11 + IE11	413	2	3	180D6348	900	1000
iC7-60EA3x07-525A		459	2	3	180D6348	900	1000
iC7-60EA3x07-590A		514	2	3	180D6348	900	1000

Danfoss Drives Oy © 2026.06

Table 46: DC Fuses, 640–1100 V DC, Eaton - (continued)

Model code[1]	Frame	Rated current I_L [A]	Number of fuses	Fuse size	Eaton part number	Fuse U_n [V]	Fuse I_n [A]
iC7-60EA3x07-650A	2 x AE10 + 2 x IE10	578	8	3	180D6344	900	630
iC7-60EA3x07-730A		651	8	3	180D6346	900	800
iC7-60EA3x07-820A		734	8	3	180D6346	900	800
iC7-60EA3x07-945A	2 x AE11 + 2 x IE11	825	8	3	180D6348	900	1000
iC7-60EA3x07-1060		917	8	3	180D6348	900	1000
iC7-60EA3x07-1180		1009	8	3	180D6348	900	1000
iC7-60EA3x07-1300	3 x AE11 + 3 x IE11	1100	12	3	180D6344	900	630
iC7-60EA3x07-1500		1284	12	3	180D6348	900	1000
iC7-60EA3x07-1770		1467	12	3	180D6348	900	1000

1) Model codes starting with iC7-60EA3x can be iC7-60EA3A or iC7-60EA3H.

9.6.6 External Supply Protection for Input Devices

The enclosed drives with a mains contactor or a main switch must be protected with external protective devices. The external fuses listed in the table meet IEC Type 1 coordination requirements for contactor short-circuit performance and are required for main switch protection.

Alternatively, the enclosed drives can be protected with an external molded-case circuit breaker (MCCB). Use only the MCCBs listed below, together with the specified protection settings.

Enable the circuit breaker with long-time (L), short-time (S) and instantaneous (I) protection. The short-time delay allows coordination with the semiconductor protection fuses of the drive. The instantaneous protection ensures rapid clearing of high short-circuit faults.

The specified MCCBs and protection settings ensure compliance with overload capability, short-circuit energy limitation, and internal component withstand requirements.

Table 47: External Fuses of the Enclosed Drives, 380–500 V AC

Model code[1]	Frame	Maximum IEC fuse	Maximum UL fuse
iC7-60EA3N05-206A	FE9, FE10	gG 315 A[2] or gG 355 A	Class J, 600 A
iC7-60EA3N05-245A		gG 315 A	Class J, 600 A
iC7-60EA3N05-302A		gG 400 A	Class J, 600 A
iC7-60EA3N05-385A		gG 500 A	Class J, 600 A
iC7-60EA3N05-480A		gG 630 A	Class J, 800 A
iC7-60EA3N05-588A			Class J, 800 A
iC7-60EA3x05-385A	AE10 + IE10	gG 630 A	–
iC7-60EA3x05-480A			
iC7-60EA3x05-590A			–
iC7-60EA3x05-658A	AE11 + IE11	gG 1000 A	–
iC7-60EA3x05-730A			
iC7-60EA3x05-820A			
iC7-60EA3x05-880A			

Table 47: External Fuses of the Enclosed Drives, 380–500 V AC - (continued)

Model code[1]	Frame	Maximum IEC fuse	Maximum UL fuse
iC7-60EA3x05-1000	2 x AE10 + 2 x IE10	gG 1250 A	–
iC7-60EA3x05-1100			–

1) Model codes starting with iC7-60EA3x can be iC7-60EA3A or iC7-60EA3H.

2) With the mains contactor option

Table 48: External Fuses of the Enclosed Drives, 525–690 V AC

Model code	Frame	Maximum IEC fuse	Maximum UL fuse
iC7-60EA3x07-261A	AE10 + IE10	gG 630 A	–
iC7-60EA3x07-325A		gG 630 A	–
iC7-60EA3x07-365A		gG 630 A	–
iC7-60EA3x07-416A		gG 630 A	–
iC7-60EA3x07-465A	AE11 + IE11	gG 630 A	–
iC7-60EA3x07-525A		gG 630 A	–
iC7-60EA3x07-590A		gG 630 A	–
iC7-60EA3x07-650A	2 x AE10 + 2 x IE10	gG 1000 A	–
iC7-60EA3x07-730A		gG 1000 A	–
iC7-60EA3x07-820A		gG 1000 A	–
iC7-60EA3x07-945A	2 x AE11 + 2 x IE11	gG 1000 A	–

The allowed prospective short-circuit current (I_{cc}) with MCCB depends on the rated supply voltage of the device.

- At 400 V AC supply voltage, the maximum prospective short-circuit current is 65 kA.
- At 500 V AC supply voltage, the maximum prospective short-circuit current is 40 kA.
- At 690 V AC supply voltage, the maximum prospective short-circuit current is 30 kA.

At higher supply voltages, the short-circuit energy increases and the allowable prospective short-circuit current is therefore reduced. This ensures that the energy let-through of the upstream protective device remains within the withstand capability of the internal components.

Table 49: External MCCBs of the Enclosed Drives, 380–500 V AC

Model code	Frame	MCCB model (Eaton)	MCCB order number (Eaton)
iC7-60SA3N05-480A	FE10	NZMH3-VX630	191351
iC7-60SA3N05-588A			
iC7-60SA3A05-385A	AE10 + IE10	NZMH3-VX630	191351
iC7-60SA3A05-480A			
iC7-60SA3A05-590A			
iC7-60SA3A05-658A	AE11 + IE11	NZMH4-VX800	191453
iC7-60SA3A05-730A			
iC7-60SA3A05-820A		NZMH4-VX1000	191454
iC7-60SA3A05-880A			

Danfoss Drives Oy © 2026.06

Table 49: External MCCBs of the Enclosed Drives, 380–500 V AC - (continued)

Model code	Frame	MCCB model (Eaton)	MCCB order number (Eaton)
iC7-60SA3A05-1000	2 x AE10 + 2 x IE10	NZMH4-VX1250	191455
iC7-60SA3A05-1100			

Table 50: External MCCBs of the Enclosed Drives, 525–690 V AC

Model code	Frame	MCCB model (Eaton)	MCCB order number (Eaton)
iC7-60EA3A07-261A	AE10 + IE10	NZMH3-VX630	191351
iC7-60EA3A07-325A			
iC7-60EA3A07-365A			
iC7-60EA3A07-416A			
iC7-60EA3A07-465A	AE11 + IE11	NZMH3-VX630	191351
iC7-60EA3A07-525A			
iC7-60EA3A07-590A			
iC7-60EA3A07-650A	2 x IE10 + 2 x IE10	NZMH4-VX800	191453
iC7-60EA3A07-730A			
iC7-60EA3A07-820A		NZMH4-VX1000	191454
iC7-60EA3A07-945A	2 x IE11 + 2 x IE11	NZMH4-VX1000	191454

Table 51: MCCB Settings, Eaton

MCCB model	L setting	S setting	I setting
NZMH3, NZMH4	$I_r = 1$ $t_r = 20$	$I_{sd} = 6$ $t_S = 0.1$ i^2*t = OFF	$I_i = 8$

9.7 Current Ratings

9.7.1 General Current Rating Information

The current rating tables show the ratings of the enclosed drives at relevant voltage ratings. The current rating tables for the different products can be found with these links.

- 9.7.2 Current Ratings for 6-pulse Enclosed Drives, FE9 and FE10, 400 V AC
- 9.7.3 Current Ratings for 6-pulse Enclosed Drives, FE9 and FE10, UL, 460 V AC
- 9.7.4 Current Ratings for 6-pulse Enclosed Drives, FE9 and FE10, 500 V AC
- 9.7.5 Current Ratings for Regenerative AFE, 400 V AC
- 9.7.6 Current Ratings for Regenerative AFE, UL, 460 V AC
- 9.7.7 Current Ratings for Regenerative AFE, 500 V AC
- 9.7.8 Current Ratings for Regenerative AFE, 525 V AC
- 9.7.9 Current Ratings for Regenerative AFE, 690 V AC
- 9.7.10 Current Ratings for Low-harmonic AFE, 400 V AC
- 9.7.11 Current Ratings for Low-harmonic AFE, UL, 460 V AC
- 9.7.12 Current Ratings for Low-harmonic AFE, 500 V AC

- 9.7.13 Current Ratings for Low-harmonic AFE, 525 V AC
- 9.7.14 Current Ratings for Low-harmonic AFE, 690 V AC

Table 52: Abbreviations Used in the Rating Tables

Abbreviation	Description
I_N	Nominal current. If the process does not require any overloadability or the process does not include any load variation or margin for overloadability, the dimensioning can be done according to this current.
I_L	Nominal current with low overload (110%). Allows a +10% load variation for 1 minute every 5 minutes.
I_H	Nominal current with high overload (150%). Allows a +50% load variation for 1 minute every 5 minutes.
I_{peak}	Start current. Available for 3 s at start, then as long as the enclosed drive temperature allows. Relevant for inverter modules.
P_L	Output power at low overload
P_H	Output power at high overload

9.7.2 Current Ratings for 6-pulse Enclosed Drives, FE9 and FE10, 400 V AC

Table 53: Current Ratings for 6-pulse Enclosed Drives, FE9 and FE10, 400 V AC (380–440 V AC)

Model code	Frame	Nominal ratings			Low overload		High overload		Typical motor power, 400 V AC	
		$I_{N\text{-}in}$ [A]	I_N [A]	I_{peak} [A]	$I_{L\text{-}in}$ [A]	I_L [A]	$I_{H\text{-}in}$ [A]	I_H [A]	P_L [kW]	P_H [kW]
iC7-60EA3N05-206A	FE9	203	206	289	199	206	164	170	110	90
iC7-60EA3N05-245A		241	245	351	236	245	199	206	132	110
iC7-60EA3N05-302A		297	302	417	291	302	236	245	160	132
iC7-60EA3N05-385A		379	385	514	371	385	291	302	200	160
iC7-60EA3N05-480A	FE10	472	480	655	463	480	371	385	250	200
iC7-60EA3N05-588A		578	588	816	567	588	463	480	315	250

9.7.3 Current Ratings for 6-pulse Enclosed Drives, FE9 and FE10, UL, 460 V AC

Table 54: Current Ratings for 6-pulse Enclosed Drives, FE9 and FE10, UL, 460 V AC (440–480 V AC)

Model code	Frame	Nominal ratings			Low overload		High overload		Typical motor power, 480 V AC	
		$I_{N\text{-}in}$ [A]	I_N [A]	I_{peak} [A]	$I_{L\text{-}in}$ [A]	I_L [A]	$I_{H\text{-}in}$ [A]	I_H [A]	P_L [Hp]	P_H [Hp]
iC7-60EA3N05-206A	FE9	185	196	283	196	196	154	166	150	125
iC7-60EA3N05-245A		227	240	334	240	240	181	196	200	150
iC7-60EA3N05-302A		285	302	408	302	302	222	240	250	200
iC7-60EA3N05-385A		343	364	514	364	364	279	302	300	250
iC7-60EA3N05-480A	FE10	430	456	619	456	456	336	364	350	300
iC7-60EA3N05-588A		490	520	776	520	520	421	456	450	350

Danfoss Drives Oy © 2026.06

9.7.4 Current Ratings for 6-pulse Enclosed Drives, FE9 and FE10, 500 V AC

Table 55: Current Ratings for 6-pulse Enclosed Drives, FE9 and FE10, 500 V AC (480–500 V AC)

Model code	Frame	Nominal ratings			Low overload		High overload		Typical motor power, 500 V AC	
		$I_{N\text{-}in}$ [A]	I_N [A]	I_{peak} [A]	$I_{L\text{-}in}$ [A]	I_L [A]	$I_{H\text{-}in}$ [A]	I_H [A]	P_L [kW]	P_H [kW]
iC7-60EA3N05-206A	FE9	193	196	283	189	196	160	166	132	110
iC7-60EA3N05-245A		236	240	334	232	240	189	196	160	132
iC7-60EA3N05-302A		297	302	408	291	302	232	240	200	160
iC7-60EA3N05-385A		358	364	514	351	364	291	302	250	200
iC7-60EA3N05-480A	FE10	449	456	619	440	456	351	364	315	250
iC7-60EA3N05-588A		512	520	776	501	520	440	456	355	315

9.7.5 Current Ratings for Regenerative AFE, 400 V AC

Table 56: Current Ratings for Regenerative AFE, 400 V AC

Model code	Frame	Nominal ratings			Low overload		High overload		Typical motor power, 400 V AC	
		$I_{N\text{-}in}$ [A]	I_N [A]	I_{peak} [A]	$I_{L\text{-}in}$ [A]	I_L [A]	$I_{H\text{-}in}$ [A]	I_H [A]	P_L [kW]	P_H [kW]
iC7-60EA3A05-385A	AE10+IE10	325	394	510	317	385	254	300	200	160
iC7-60EA3A05-480A		403	490	655	394	480	317	385	250	200
iC7-60EA3A05-590A		508	601	816	497	588	394	480	315	250
iC7-60EA3A05-658A	AE11+IE11	571	672	930	559	658	394	547	355	250
iC7-60EA3A05-730A		647	746	1031	633	730	499	606	400	315
iC7-60EA3A05-820A		728	838	1158	712	820	562	681	450	355
iC7-60EA3A05-880A		809	899	1243	791	880	633	731	500	400
iC7-60EA3A05-1000	2 x AE10+2 x IE10	905	1021	1411	886	1000	712	830	560	450
iC7-60EA3A05-1100		1018	1123	1553	997	1100	791	913	630	500
iC7-60EA3A05-1260	2 x AE11+2 x IE11	1148	1287	1785	1123	1260	886	1050	710	560
iC7-60EA3A05-1450		1293	1481	2057	1265	1450	997	1210	800	630
iC7-60EA3A05-1710		1453	1746	2414	1423	1710	1123	1420	900	710
iC7-60EA3A05-1960	3 x AE11+3 x IE11	1777	2001	2771	1740	1960	1265	1630	1100	800
iC7-60EA3A05-2150		1938	2195	3043	1898	2150	1423	1790	1200	900
iC7-60EA3A05-2510		2261	2563	3553	2214	2510	1740	2090	1400	1100

9.7.6 Current Ratings for Regenerative AFE, UL, 460 V AC

Table 57: Current Ratings for Regenerative AFE, UL, 460 V AC

Model code	Frame	Nominal ratings			Low overload		High overload		Typical motor power, 480 V AC	
		$I_{N\text{-}in}$ [A]	I_N [A]	I_{peak} [A]	$I_{L\text{-}in}$ [A]	I_L [A]	$I_{H\text{-}in}$ [A]	I_H [A]	P_L [Hp]	P_H [Hp]
iC7-60EA3A05-385A	AE10+IE10	303	372	510	296	364	247	300	300	250
iC7-60EA3A05-480A		352	466	619	344	456	296	364	350	300
iC7-60EA3A05-590A		451	531	776	441	520	344	456	450	350
iC7-60EA3A05-658A	AE11+IE11	500	603	833	489	590	344	490	500	350
iC7-60EA3A05-730A		554	672	930	542	658	443	547	550	450
iC7-60EA3A05-820A		604	746	1031	591	730	492	606	600	500
iC7-60EA3A05-880A		704	838	1158	688	820	542	681	700	550
iC7-60EA3A05-1000	2 x AE10+2 x IE10	755	940	1299	738	920	591	764	750	600
iC7-60EA3A05-1100		855	1052	1454	837	1030	640	855	850	650
iC7-60EA3A05-1260	2 x AE11+2 x IE11	955	1174	1632	935	1150	738	960	950	750
iC7-60EA3A05-1450		1106	1328	1836	1082	1300	837	1080	1100	850
iC7-60EA3A05-1710		1306	1603	2227	1279	1570	1082	1310	1300	1100
iC7-60EA3A05-1960	3 x AE11+3 x IE11	1608	1940	2686	1574	1900	1279	1580	1600	1300
iC7-60EA3A05-2150		1709	2083	2890	1673	2040	1279	1700	1700	1300
iC7-60EA3A05-2510		1909	2389	3315	1869	2340	1574	1950	1900	1600

9.7.7 Current Ratings for Regenerative AFE, 500 V AC

Table 58: Current Ratings for Regenerative AFE, 500 V AC

Model code	Frame	Nominal ratings			Low overload		High overload		Typical motor power, 500 V AC	
		$I_{N\text{-}in}$ [A]	I_N [A]	I_{peak} [A]	$I_{L\text{-}in}$ [A]	I_L [A]	$I_{H\text{-}in}$ [A]	I_H [A]	P_L [kW]	P_H [kW]
iC7-60EA3A05-385A	AE10+IE10	322	372	510	315	364	254	300	250	200
iC7-60EA3A05-480A		406	466	619	397	456	315	364	315	250
iC7-60EA3A05-590A		457	531	776	447	520	397	456	355	315
iC7-60EA3A05-658A	AE11+IE11	518	603	833	506	590	399	490	400	315
iC7-60EA3A05-730A		583	672	930	570	658	450	547	450	355
iC7-60EA3A05-820A		647	746	1031	633	730	506	606	500	400
iC7-60EA3A05-880A		725	838	1158	709	820	570	681	560	450
iC7-60EA3A05-1000	2 x AE10+2 x IE10	815	940	1299	797	920	633	764	630	500
iC7-60EA3A05-1100		919	1052	1454	899	1030	709	855	710	560
iC7-60EA3A05-1260	2 x AE11+2 x IE11	1034	1174	1632	1012	1150	797	960	800	630
iC7-60EA3A05-1450		1164	1328	1836	1139	1300	899	1080	900	710
iC7-60EA3A05-1710		1422	1603	2227	1392	1570	1012	1310	1100	800

Danfoss Drives Oy © 2026.06

Table 58: Current Ratings for Regenerative AFE, 500 V AC - (continued)

Model code	Frame	Nominal ratings			Low overload		High overload		Typical motor power, 500 V AC	
		$I_{N\text{-}in}$ [A]	I_N [A]	I_{peak} [A]	$I_{L\text{-}in}$ [A]	I_L [A]	$I_{H\text{-}in}$ [A]	I_H [A]	P_L [kW]	P_H [kW]
iC7-60EA3A05-1960	3 x AE11+3 x IE11	1680	1940	2686	1645	1900	1265	1580	1300	1000
iC7-60EA3A05-2150		1809	2083	2890	1771	2040	1392	1700	1400	1100
iC7-60EA3A05-2510		2067	2389	3315	2024	2340	1518	1950	1600	1200

9.7.8 Current Ratings for Regenerative AFE, 525 V AC

Table 59: Current Ratings for Regenerative AFE, 525 V AC (525–550 V AC)

Model code	Frame	Nominal ratings			Low overload		High overload		Typical motor power, 525 V AC	
		$I_{N\text{-}in}$ [A]	I_N [A]	I_{peak} [A]	$I_{L\text{-}in}$ [A]	I_L [A]	$I_{H\text{-}in}$ [A]	I_H [A]	P_L [kW]	P_H [kW]
iC7-60EA3A07-261A	AE10 + IE10	235	267	369	193	261	192	217	160	132
iC7-60EA3A07-325A		293	332	459	242	325	238	270	200	160
iC7-60EA3A07-365A		329	373	544	302	365	282	320	250	200
iC7-60EA3A07-416A		388	425	589	380	416	302	346	315	250
iC7-60EA3A07-465A	AE11 + IE11	388	475	657	380	465	302	386	315	250
iC7-60EA3A07-525A		437	537	742	428	525	380	436	355	315
iC7-60EA3A07-590A		492	603	833	482	590	428	490	400	355
iC7-60EA3A07-650A	2 x AE10 + 2 x IE10	554	664	918	543	650	482	540	450	400
iC7-60EA3A07-730A		615	746	1060	603	730	543	623	500	450
iC7-60EA3A07-820A		689	838	1156	675	820	603	680	560	500
iC7-60EA3A07-945A	2 x AE11 + 2 x IE11	874	965	1343	856	945	675	790	710	560
iC7-60EA3A07-1060		984	1083	1496	964	1060	759	880	800	630
iC7-60EA3A07-1180		1107	1205	1666	1085	1180	856	980	900	710
iC7-60EA3A07-1300	3 x AE11 + 3 x IE11	1230	1328	1836	1205	1300	964	1080	1000	800
iC7-60EA3A07-1500		1353	1532	2117	1326	1500	1085	1245	1100	900
iC7-60EA3A07-1770		1599	1807	2499	1567	1770	1326	1470	1300	1100

9.7.9 Current Ratings for Regenerative AFE, 690 V AC

Table 60: Current Ratings for Regenerative AFE, 690 V AC (600–690 V AC)

Model code	Frame	Nominal ratings			Low overload		High overload		Typical motor power, 690 V AC	
		$I_{N\text{-}in}$ [A]	I_N [A]	I_{peak} [A]	$I_{L\text{-}in}$ [A]	I_L [A]	$I_{H\text{-}in}$ [A]	I_H [A]	P_L [kW]	P_H [kW]
iC7-60EA3A07-261A	AE10 + IE10	235	267	369	229	261	184	217	250	200
iC7-60EA3A07-325A		295	332	459	288	325	229	270	315	250
iC7-60EA3A07-365A		332	373	510	324	365	229	300	355	250
iC7-60EA3A07-416A		375	425	587	367	416	290	345	400	315

Table 60: Current Ratings for Regenerative AFE, 690 V AC (600–690 V AC) - (continued)

Model code	Frame	Nominal ratings			Low overload		High overload		Typical motor power, 690 V AC	
		$I_{N\text{-}in}$ [A]	I_N [A]	I_{peak} [A]	$I_{L\text{-}in}$ [A]	I_L [A]	$I_{H\text{-}in}$ [A]	I_H [A]	P_L [kW]	P_H [kW]
iC7-60EA3A07-465A	AE11 + IE11	422	475	657	413	465	326	386	450	355
iC7-60EA3A07-525A		470	537	742	459	525	367	436	500	400
iC7-60EA3A07-590A		526	603	833	514	590	413	490	560	450
iC7-60EA3A07-650A	2 x AE10 + 2 x IE10	591	664	918	578	650	459	540	630	500
iC7-60EA3A07-730A		666	746	1029	651	730	514	605	710	560
iC7-60EA3A07-820A		751	838	1156	734	820	578	680	800	630
iC7-60EA3A07-945A	2 x AE11 + 2 x IE11	843	965	1335	825	945	651	785	900	710
iC7-60EA3A07-1060		937	1083	1496	917	1060	734	880	1000	800
iC7-60EA3A07-1180		1031	1205	1666	1009	1180	825	980	1100	900
iC7-60EA3A07-1300	3 x AE11 + 3 x IE11	1124	1328	1836	1100	1300	917	1080	1200	1000
iC7-60EA3A07-1500		1312	1532	2117	1284	1500	1100	1245	1400	1200
iC7-60EA3A07-1770		1498	1807	2499	1467	1770	1284	1470	1600	1400

9.7.10 Current Ratings for Low-harmonic AFE, 400 V AC

Table 61: Current Ratings for Low-harmonic AFE, 400 V AC

Model code	Frame	Nominal ratings			Low overload		High overload		Typical motor power, 400 V AC	
		$I_{N\text{-}in}$ [A]	I_N [A]	I_{peak} [A]	$I_{L\text{-}in}$ [A]	I_L [A]	$I_{H\text{-}in}$ [A]	I_H [A]	P_L [kW]	P_H [kW]
iC7-60EA3H05-385A	AE10+IE10	325	394	510	317	385	254	300	200	160
iC7-60EA3H05-480A		403	490	655	394	480	317	385	250	200
iC7-60EA3H05-590A		508	603	816	497	590	394	480	315	250
iC7-60EA3H05-658A	AE11+IE11	571	672	930	559	658	394	547	355	250
iC7-60EA3H05-730A		647	746	1031	633	730	499	606	400	315
iC7-60EA3H05-820A		728	838	1158	712	820	562	681	450	355
iC7-60EA3H05-880A		809	899	1243	791	880	633	731	500	400
iC7-60EA3H05-1000	2 x AE10+2 x IE10	905	1021	1411	886	1000	712	830	560	450
iC7-60EA3H05-1100		1018	1123	1553	997	1100	791	913	630	500
iC7-60EA3H05-1260	2 x AE11+2 x IE11	1148	1287	1785	1123	1260	886	1050	710	560
iC7-60EA3H05-1450		1293	1481	2057	1265	1450	997	1210	800	630
iC7-60EA3H05-1710		1453	1746	2414	1423	1710	1123	1420	900	710
iC7-60EA3H05-1960	3 x AE11+3 x IE11	1777	2001	2771	1740	1960	1265	1630	1100	800
iC7-60EA3H05-2150		1938	2195	3043	1898	2150	1423	1790	1200	900
iC7-60EA3H05-2510		2261	2563	3553	2214	2510	1740	2090	1400	1100

Danfoss Drives Oy © 2026.06

9.7.11 Current Ratings for Low-harmonic AFE, UL, 460 V AC

Table 62: Current Ratings for Low-harmonic AFE, UL, 460 V AC

Model code	Frame	Nominal ratings			Low overload		High overload		Typical motor power, 480 V AC	
		$I_{N\text{-}in}$ [A]	I_N [A]	I_{peak} [A]	$I_{L\text{-}in}$ [A]	I_L [A]	$I_{H\text{-}in}$ [A]	I_H [A]	P_L [Hp]	P_H [Hp]
iC7-60EA3H05-385A	AE10+IE10	303	372	510	296	364	247	300	300	250
iC7-60EA3H05-480A		352	466	619	344	456	296	364	350	300
iC7-60EA3H05-590A		451	531	776	441	520	344	456	450	350
iC7-60EA3H05-658A	AE11+IE11	500	603	833	489	590	344	490	500	350
iC7-60EA3H05-730A		554	672	930	542	658	443	547	550	450
iC7-60EA3H05-820A		604	746	1031	591	730	492	606	600	500
iC7-60EA3H05-880A		704	838	1158	688	820	542	681	700	550
iC7-60EA3H05-1000	2 x AE10+2 x IE10	755	940	1299	738	920	591	764	750	600
iC7-60EA3H05-1100		855	1052	1454	837	1030	640	855	850	650
iC7-60EA3H05-1260	2 x AE11+2 x IE11	955	1174	1632	935	1150	738	960	950	750
iC7-60EA3H05-1450		1106	1328	1836	1082	1300	837	1080	1100	850
iC7-60EA3H05-1710		1306	1603	2227	1279	1570	1082	1310	1300	1100
iC7-60EA3H05-1960	3 x AE11+3 x IE11	1608	1940	2686	1574	1900	1279	1580	1600	1300
iC7-60EA3H05-2150		1709	2083	2890	1673	2040	1279	1700	1700	1300
iC7-60EA3H05-2510		1909	2389	3315	1869	2340	1574	1950	1900	1600

9.7.12 Current Ratings for Low-harmonic AFE, 500 V AC

Table 63: Current Ratings for Low-harmonic AFE, 500 V AC

Model code	Frame	Nominal ratings			Low overload		High overload		Typical motor power, 500 V AC	
		$I_{N\text{-}in}$ [A]	I_N [A]	I_{peak} [A]	$I_{L\text{-}in}$ [A]	I_L [A]	$I_{H\text{-}in}$ [A]	I_H [A]	P_L [kW]	P_H [kW]
iC7-60EA3H05-385A	AE10+IE10	322	372	510	315	364	254	300	250	200
iC7-60EA3H05-480A		406	466	619	397	456	315	364	315	250
iC7-60EA3H05-590A		457	531	776	447	520	397	456	355	315
iC7-60EA3H05-658A	AE11+IE11	518	603	833	506	590	399	490	400	315
iC7-60EA3H05-730A		583	672	930	570	658	450	547	450	355
iC7-60EA3H05-820A		647	746	1031	633	730	506	606	500	400
iC7-60EA3H05-880A		725	838	1158	709	820	570	681	560	450
iC7-60EA3H05-1000	2 x AE10+2 x IE10	815	940	1299	797	920	633	764	630	500
iC7-60EA3H05-1100		919	1052	1454	899	1030	709	855	710	560
iC7-60EA3H05-1260	2 x AE11+2 x IE11	1034	1174	1632	1012	1150	797	960	800	630
iC7-60EA3H05-1450		1164	1328	1836	1139	1300	899	1080	900	710
iC7-60EA3H05-1710		1422	1603	2227	1392	1570	1012	1310	1100	800

Table 63: Current Ratings for Low-harmonic AFE, 500 V AC - (continued)

Model code	Frame	Nominal ratings			Low overload		High overload		Typical motor power, 500 V AC	
		$I_{N\text{-}in}$ [A]	I_N [A]	I_{peak} [A]	$I_{L\text{-}in}$ [A]	I_L [A]	$I_{H\text{-}in}$ [A]	I_H [A]	P_L [kW]	P_H [kW]
iC7-60EA3H05-1960	3 x AE11+3 x IE11	1680	1940	2686	1645	1900	1265	1580	1300	1000
iC7-60EA3H05-2150		1809	2083	2890	1771	2040	1392	1700	1400	1100
iC7-60EA3H05-2510		2067	2389	3315	2024	2340	1518	1950	1600	1200

9.7.13 Current Ratings for Low-harmonic AFE, 525 V AC

Table 64: Current Ratings for Low-harmonic AFE, 525 V AC (525–550 V AC)

Model code	Frame	Nominal ratings			Low overload		High overload		Typical motor power, 525 V AC	
		$I_{N\text{-}in}$ [A]	I_N [A]	I_{peak} [A]	$I_{L\text{-}in}$ [A]	I_L [A]	$I_{H\text{-}in}$ [A]	I_H [A]	P_L [kW]	P_H [kW]
iC7-60EA3H07-261A	AE10 + IE10	235	267	369	193	261	192	217	160	132
iC7-60EA3H07-325A		293	332	459	242	325	238	270	200	160
iC7-60EA3H07-365A		329	373	544	302	365	282	320	250	200
iC7-60EA3H07-416A		388	425	589	380	416	302	346	315	250
iC7-60EA3H07-465A	AE11 + IE11	388	475	657	380	465	302	386	315	250
iC7-60EA3H07-525A		437	537	742	428	525	380	436	355	315
iC7-60EA3H07-590A		492	603	833	482	590	428	490	400	355
iC7-60EA3H07-650A	2 x AE10 + 2 x IE10	554	664	918	543	650	482	540	450	400
iC7-60EA3H07-730A		615	746	1060	603	730	543	623	500	450
iC7-60EA3H07-820A		689	838	1156	675	820	603	680	560	500
iC7-60EA3H07-945A	2 x AE11 + 2 x IE11	874	965	1343	856	945	675	790	710	560
iC7-60EA3H07-1060		984	1083	1496	964	1060	759	880	800	630
iC7-60EA3H07-1180		1107	1205	1666	1085	1180	856	980	900	710
iC7-60EA3H07-1300	3 x AE11 + 3 x IE11	1230	1328	1836	1205	1300	964	1080	1000	800
iC7-60EA3H07-1500		1353	1532	2117	1326	1500	1085	1245	1100	900
iC7-60EA3H07-1770		1599	1807	2499	1567	1770	1326	1470	1300	1100

9.7.14 Current Ratings for Low-harmonic AFE, 690 V AC

Table 65: Current Ratings for Low-harmonic AFE, 690 V AC (600–690 V AC)

Model code	Frame	Nominal ratings			Low overload		High overload		Typical motor power, 690 V AC	
		$I_{N\text{-}in}$ [A]	I_N [A]	I_{peak} [A]	$I_{L\text{-}in}$ [A]	I_L [A]	$I_{H\text{-}in}$ [A]	I_H [A]	P_L [kW]	P_H [kW]
iC7-60EA3H07-261A	AE10 + IE10	235	267	369	229	261	184	217	250	200
iC7-60EA3H07-325A		295	332	459	288	325	229	270	315	250
iC7-60EA3H07-365A		332	373	510	324	365	229	300	355	250
iC7-60EA3H07-416A		375	425	587	367	416	290	345	400	315

Danfoss Drives Oy © 2026.06

Table 65: Current Ratings for Low-harmonic AFE, 690 V AC (600–690 V AC) - (continued)

Model code	Frame	Nominal ratings			Low overload		High overload		Typical motor power, 690 V AC	
		$I_{N\text{-}in}$ [A]	I_N [A]	I_{peak} [A]	$I_{L\text{-}in}$ [A]	I_L [A]	$I_{H\text{-}in}$ [A]	I_H [A]	P_L [kW]	P_H [kW]
iC7-60EA3H07-465A	AE11 + IE11	422	475	657	413	465	326	386	450	355
iC7-60EA3H07-525A		470	537	742	459	525	367	436	500	400
iC7-60EA3H07-590A		526	603	833	514	590	413	490	560	450
iC7-60EA3H07-650A	2 x AE10 + 2 x IE10	591	664	918	578	650	459	540	630	500
iC7-60EA3H07-730A		666	746	1029	651	730	514	605	710	560
iC7-60EA3H07-820A		751	838	1156	734	820	578	680	800	630
iC7-60EA3H07-945A	2 x AE11 + 2 x IE11	843	965	1335	825	945	651	785	900	710
iC7-60EA3H07-1060		937	1083	1496	917	1060	734	880	1000	800
iC7-60EA3H07-1180		1031	1205	1666	1009	1180	825	980	1100	900
iC7-60EA3H07-1300	3 x AE11 + 3 x IE11	1124	1328	1836	1100	1300	917	1080	1200	1000
iC7-60EA3H07-1500		1312	1532	2117	1284	1500	1100	1245	1400	1200
iC7-60EA3H07-1770		1498	1807	2499	1467	1770	1284	1470	1600	1400

9.8 Output Current Derating

9.8.1 Derating the Output Current, 380–500 V AC

The output current must be derated in the following cases.

- When the ambient temperature is above 40 °C (104 °F).
- When the installation altitude is higher than 1000 m (3300 ft).
- For inverter modules, derating is required when the switching frequency is higher than 3 kHz.

NOTE: The default switching frequency for AFE modules is 4 kHz and it should not be changed.

NOTE: For the FE9 and FE10, the maximum switching frequency is 8 kHz.

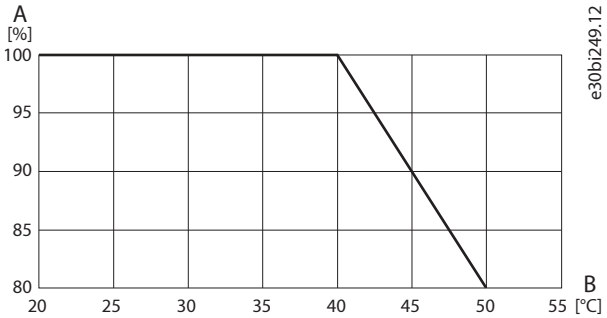

Figure 139: Output Current Derating vs. Ambient Temperature

A	Allowed output current	B	Ambient temperature

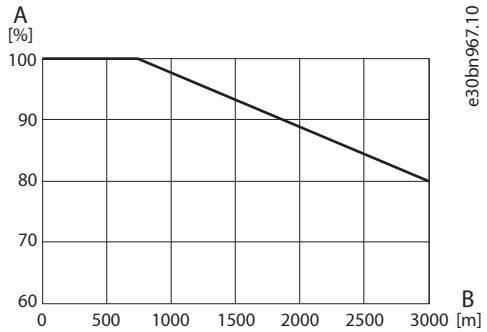

Figure 140: Output Current Derating vs. Installation Altitude

A	Allowed output current	B	Installation altitude, above sea level

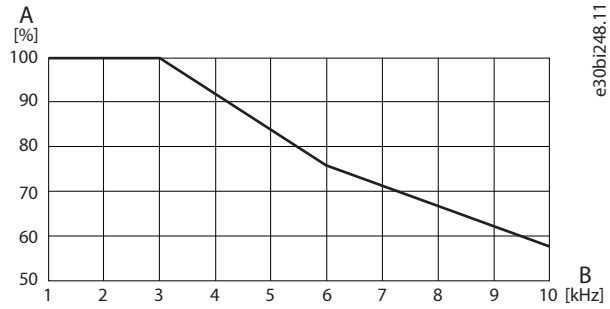

Figure 141: Output Current Derating vs. Switching Frequency (INU)

A	Allowed output current	B	Switching frequency

9.8.2 Derating the Output Current, 525–690 V AC

The output current must be derated in the following cases.

- When the ambient temperature is above 40 °C (104 °F).
- When the installation altitude is higher than 1000 m (3300 ft).
- For inverter modules, derating is required when the switching frequency is higher than 2 kHz.

NOTE: The default switching frequency for AFE/GC modules is 3 kHz.

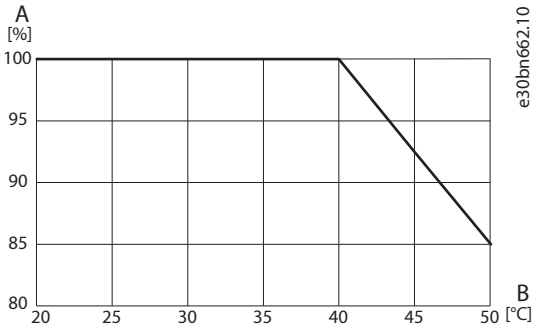

Figure 142: Output Current Derating vs. Ambient Temperature, 525–690 V AC

A	Allowed output current	B	Ambient temperature

Danfoss Drives Oy © 2026.06

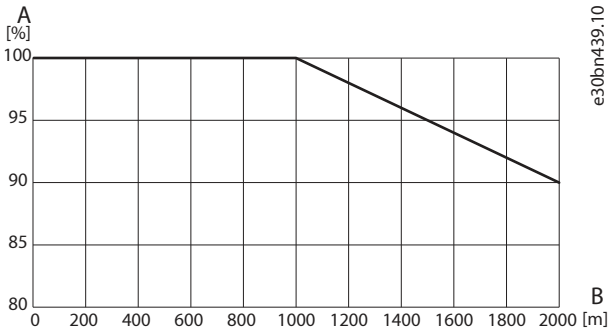

Figure 143: Output Current Derating vs. Installation Altitude, 525–690 V AC

A	Allowed output current	B	Installation altitude, above sea level

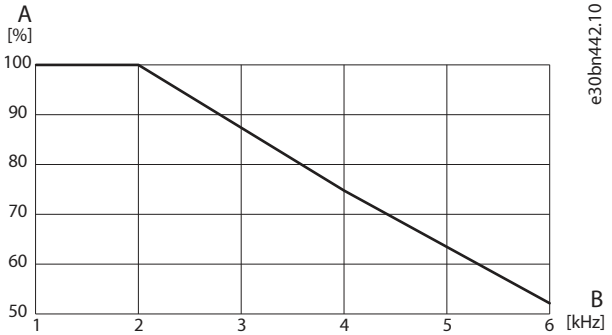

Figure 144: Output Current Derating vs. Switching Frequency (Inverter), 525–690 V AC

A	Allowed output current	B	Switching frequency

9.8.3 Output dU/dt Filter Derating

With the enclosed drives AE10 and AE11, it is possible to use a dU/dt filter.

The nominal switching frequency with the dU/dt Filter:

- 500 V: 3 kHz (DPWM)
- 690 V: 2 kHz (DPWM)

The maximum switching frequency with the dU/dt Filter:

- 500 V: 10 kHz (DPWM)
- 690 V: 6 kHz (DPWM)

The dU/dt Filter can be used without derating up to 70 Hz. For output frequencies higher than 70 Hz, current must be derated according to the curve shown in Figure 145. Above 120 Hz, a special high-speed filter is recommended.

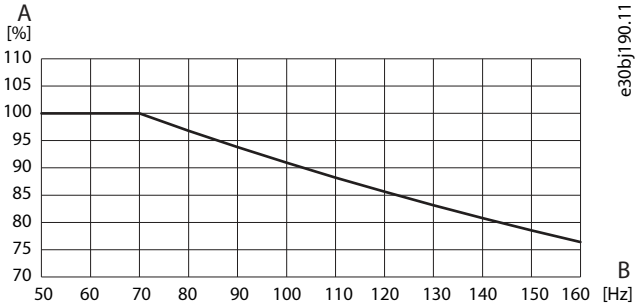

Figure 145: Output Frequency Derating

A	Allowed current	B	Output frequency

Maximum motor cable length depends mainly on switching frequency, DC-link voltage, and motor cable setup. In nominal conditions, the maximum motor cable length is 150 m (492 ft). The motor cable length is based on the maximum number of cables for each frame. For example, the limits for a 590 A filter are based on 3 parallel cables, and for an 880 A filter on 4 parallel cables. The default motor cable operating capacitance is 0.75 nF/m. If another cable type is used, or the number of cables connected in parallel does not match the recommendations, the maximum motor cable length must be derated so that the maximum total motor cable capacitance is not exceeded.

Losses are higher in the low output frequency range (0–5 Hz). If drives are operating in this range, the maximum motor cable length (capacitance) must be derated 10%.

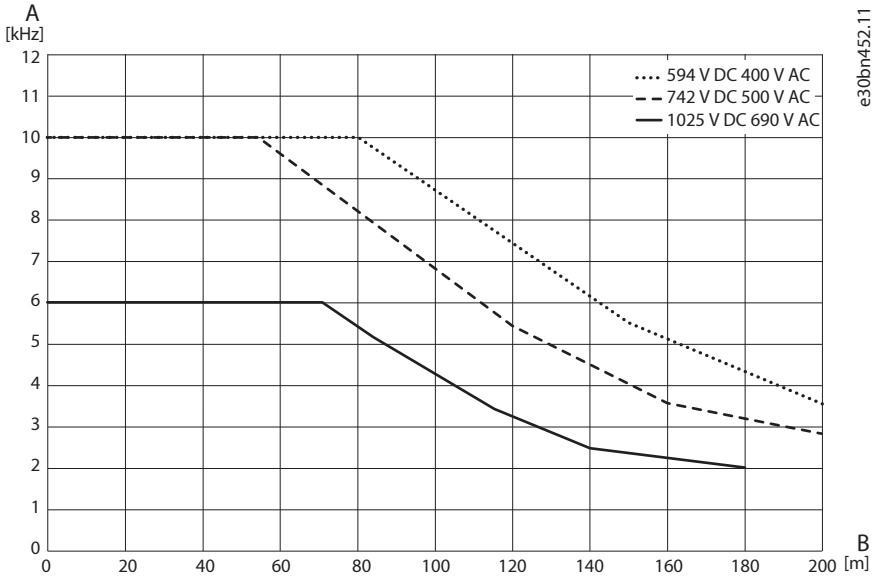

Figure 146: Safe Operating Area of the dU/dt Filter OF7U1

A	Switching frequency	B	Default cable length

The safe operating curves for dU/dt filters are shown in Figure 146. The motor cable length is based on the default cabling of the matching drive. If there are multiple cables, the actual cable capacitance is the sum of each cable capacitance. It is assumed that the default cable type has a capacitance of 75 nF/100 m. If other cabling arrangement is used than the default, the maximum cable length must be derated so that the given total cable capacitance of safe operating curves are not exceeded.

9.8.4 Output Common-mode Filter Derating

With the enclosed drives AE10 and AE11, it is possible to use a common-mode filter. With the common-mode filter, the nominal switching frequency is 3 kHz DPWM. The maximum switching frequency is 6 kHz DPWM at 690 V and 10 kHz DPWM at 500 V. The common-mode filter can operate in the whole output frequency range of the drive.

The maximum motor cable length depends mainly on switching frequency, DC-link voltage, and motor cable setup. In nominal conditions, the maximum motor cable length is 150 m (492 ft). The motor cable length is based on the maximum number of cables for each frame. For example, the limits for a 590 A filter are based on 3 parallel cables, and for an 880 A filter on 4 parallel cables. The default motor cable operating capacitance is 0.75 nF/m. If another cable type is used, or the number of cables connected in parallel does not match the recommendations, the maximum motor cable length must be derated so that the maximum total motor cable capacitance is not exceeded.

Losses are higher in the low output frequency range (0–5 Hz). If drives are operating in this range, the maximum motor cable length (capacitance) must be derated 20%.

Danfoss Drives Oy © 2026.06

In an IT system, filter losses in a single-phase ground fault depend on the setup. All capacitances to ground should be minimized to minimize the fault current. The fault current increases the losses, and continuous operation during the ground fault cannot be guaranteed, especially if the filter is already in the limits without the fault. The filter has temperature protection against too high ground fault currents.

9.9 Power Losses

9.9.1 Power Losses of 6-pulse Enclosed Drives, 500 V AC

Table 66: Power Losses of 6-pulse Enclosed Drives, 500 V AC

Model code	Frame	Nominal current, low overload [A]	Total power loss [kW]
iC7-60EA3N05-206A	FE9	199	2.3
iC7-60EA3N05-245A		236	2.7
iC7-60EA3N05-302A		291	3.4
iC7-60EA3N05-385A		371	4.0
iC7-60EA3N05-480A	FE10	463	5.1
iC7-60EA3N05-588A		567	6.3

9.9.2 Power Losses of Regenerative and Low-Harmonic Enclosed Drives, 500 V AC

Table 67: Power Losses of Regenerative and Low-Harmonic Enclosed Drives, 500 V AC

Model code[1]	Frame	Nominal current, low overload [A]	Total power loss [kW]
iC7-60EA3x05-385A	AE10+IE10	317	6.1
iC7-60EA3x05-480A		394	7.8
iC7-60EA3x05-590A		497	10.9
iC7-60EA3x05-658A	AE11+IE11	559	10.8
iC7-60EA3x05-730A		633	12.7
iC7-60EA3x05-820A		712	14.9
iC7-60EA3x05-880A		791	17.4
iC7-60EA3x05-1000	2 x AE10+2 x IE10	886	17.8
iC7-60EA3x05-1100		997	21.0
iC7-60EA3x05-1260	2 x AE11+2 x IE11	1123	22.0
iC7-60EA3x05-1450		1265	27.0
iC7-60EA3x05-1710		1423	34.2
iC7-60EA3x05-1960	3 x AE11+3 x IE11	1740	38.5
iC7-60EA3x05-2150		1898	47.0
iC7-60EA3x05-2340		2056	50.5
iC7-60EA3x05-2510		2214	61.9

1) Model codes starting with iC7-60EA3x05 can be iC7-60EA3A05 or iC7-60EA3H05.

9.10 Technical Data

9.10.1 Mains Connections

Table 68: Mains Connections

Item	Technical data
Nominal AC voltage	Voltage class 5: 3 x 380...500 V AC ±10%, -15% at reduced power Voltage class 7: 3 x 525...690 V AC ±10%, -15% at reduced power
Protective class	Class I
Mains network	TN-S, TN-C, IT, TT, and delta-coupled and corner-grounded. (Supply voltage limited to 500 V AC for corner-grounded networks.) In North America: solidly grounded wye, ungrounded delta/wye, resistance-grounded or reactance-grounded system, corner-grounded delta
Mains frequency	45...66 Hz
Voltage imbalance	3% of rated voltage
Short-circuit current rating, with the specified fuses	The maximum short-circuit current I_{cc} is ≤ 65 kA. Options +GSEP, +GCES: • The maximum short-circuit current I_{cc} is ≤ 50 kA. • The maximum peak short-circuit current I_p is 110 kA.
True power factor (λ)	≥ 0.9 nominal at rated load
Displacement power factor (DPF)	AFE: 1 6-pulse: 0.97
Switching on input supply from a discharged drive	FE09–FE10: Maximum 1 time/2 minutes
Overvoltage category	Category III

9.10.2 Motor Connections

Table 69: Motor Connections

Item	Technical data
Output voltage	0–100% of supply voltage
Output frequency	0...599 Hz [(1)]
Switching frequency	1.5…8 kHz, default 3 kHz
Field weakening point	1...600 Hz
Motor control principles	U/f control VVC+ (Vector Voltage Control) FVC+ (Flux Vector Control)
Motor and generator types supported	Induction/asynchronous motor Non-Salient Permanent Magnet Motor
Torque control, torque step rise time	Open loop: <5 ms with nominal torque and <1 ms with nominal torque with AFE supply Closed loop: <5 ms with nominal torque and <1 ms with nominal torque with AFE supply

Danfoss Drives Oy © 2026.06

Table 69: Motor Connections - (continued)

Item	Technical data
Torque control, static accuracy	Open loop: <2% of motor nominal torque up to nominal speed and <4% of motor nominal torque in the field weakening area Closed loop: <2% of motor nominal torque up to nominal speed and <4% of motor nominal torque in the field weakening area
Speed control, static accuracy	Open loop: 5% of motor nominal slip up to motor nominal motor frequency and 10% of motor nominal slip in the field weakening area Closed loop: 0.01% static error of nominal speed with encoder PPR of 1024 or better
Speed control, dynamic accuracy (response)	Open loop: 0.2...0.4% s with nominal torque step Closed loop: 0.1...0.2% s with nominal torque step
Motor control resolution	Reference setpoint resolution 31 bit + sign
Cable length	up to 150 m (492 ft) shielded motor cable up to 300 m (984 ft) unshielded motor cable

1) Dependent on voltage, current, and control mode

9.10.3 Ambient Conditions

Table 70: Ambient Conditions

Item	Technical data
Protection rating	IP21 IP54
Ambient operating temperature	-15 °C...0 °C (5 °F...32 °F) (no frost). The highest current rating of AE11 and IE11 must be derated 20% in freezing conditions. 0 °C...+40 °C (32 °F...104 °F) (at I_N) with derating up to +50 °C (122 °F).
Installation temperature	–10 °C...+70 °C (14 °F...158 °F)
Storage/transportation temperature	–40 °C...+70 °C (-40 °F...158 °F)
Relative humidity	5...95% RH, no condensation, no dripping water
Environmental conditions storage	(IEC 60721-3-1) Climatic conditions: Class 1K21 Chemically active substances: Class 1C2 Biological conditions: Class 1B1 Mechanical conditions: Class 1M11 Mechanically active substances: Class 1S12
Environmental conditions transportation	(IEC 60721-3-2) Climatic conditions: Class 2K11 Chemically active substances: Class 2C2 Biological conditions: Class 2B1 Mechanical conditions: Class 2M5 Mechanically active substances: Class 2S5

Table 70: Ambient Conditions - (continued)

Item	Technical data
Environmental conditions operation	(IEC 60721-3-3) Climatic conditions: Class 3K22 Chemically active substances: Class C4 (ISO 9223:2012) (1) Biological conditions: Class 3B1 Mechanical conditions: Class 3M11 Mechanically active substances: Class 3S6 Special climatic conditions (heat radiation): Class 3Z1
Pollution degree	PD2
Altitude	0...2000 m (0...6600 ft) above sea level: TT, IT, Delta-coupled and corner-grounded network (max 500 V). 0...3000 m (0...9800 ft) above sea level: in case network is not corner-grounded (voltage class 5) 0...2000 m (0...6600 ft) above sea level (voltage class 07) 2000 m (6600 ft): Star-coupled network Above 1000 m (3300 ft): derating of the output current by 1% per each 100 m (330 ft) is required.
Vibration (IEC60068-2-6)	Displacement amplitude ±0.5 mm (peak), 5–22 Hz) (2) Constant peak acceleration 10 m/s^2 (1 g_n), 22–150 Hz
Shock (IEC60068-2-27)	max 4 G, 11 ms (in package)
Sound pressure level	Acoustic noise level is >70 dB(A).

1) On board level on coated boards.

2) FE9 and FE10: 0.25 mm

9.10.4 EMC (IEC 61800-3)

Table 71: EMC Data

Item	Technical data
Immunity	Fulfills EN 61800-3, 1st and 2nd environment
Emissions	EN 61800-3, category C3, if the drive is installed according to instructions. All: The drive can be changed to C4 for IT type mains.

Danfoss Drives Oy © 2026.06

9.10.5 Protections

Table 72: Protections

Item	Technical data
Overvoltage trip limit	Voltage class 05: 911 V DC Voltage class 07: 1250 V DC
Undervoltage trip limit	Depends on mains voltage (0.8775 x mains voltage) Voltage class 05: • Mains voltage 380–440 V AC: 334 V DC • Mains voltage 440–480 V AC: 334 V DC • Mains voltage 480–500 V AC: 447 V DC Voltage class 07: • Mains voltage 525–550 V AC: 334 V DC • Mains voltage 550–600 V AC: 447 V DC • Mains voltage 600–690 V AC: 696 V DC
Ground fault protection	Yes
Mains supervision	Yes
Motor phase supervision	Yes
Overcurrent protection	Yes
Unit overtemperature protection	Yes
Motor overload protection	Yes [1]
Motor stall protection	Yes
Motor underload protection	Yes

1) The motor overload protection activates at 110% of the full load current.

9.10.6 Product Compliance

Table 73: Product Compliance

Item	Technical data
Conformity	CE, RCM, KC, EAC, UA, UKCA. See the product label of the drive for more approvals.
Safety standards	IEC/EN 61800-5-1 IEC/EN 62477-1
Functional safety	There are separate functional safety operating guides for enclosed drive solutions based on frequency converters and system modules: • For FE9 and FE10 frequency converter based solutions, see the *iC7-Automation Functional Safety Operating Guide, Frequency Converters*. • For system-module-based solutions, see the *iC7 Series Functional Safety Operating Guide, Air-cooled and Liquid-cooled System Modules.*
Marine type approvals	–

9.10.7 Efficiency

Table 74: Efficiency

Item	Technical data
Efficiency	Inverter module >99%, AFE module + LCL filter 97.5%, FE module 97.1% at 500 V AC, 1.5 kHz

Danfoss Drives Oy © 2026.06

Danfoss Drives Oy
Runsorintie 7
FIN-65380 Vaasa
drives.danfoss.com

Any information, including, but not limited to information on selection of product, its application or use, product design, weight, dimensions, capacity or any other technical data in product manuals, catalog descriptions, advertisements, etc. and whether made available in writing, orally, electronically, online or via download, shall be considered informative, and is only binding if and to the extent, explicit reference is made in a quotation or order confirmation. Danfoss cannot accept any responsibility for possible errors in catalogs, brochures, videos and other material. Danfoss reserves the right to alter its products without notice. This also applies to products ordered but not delivered provided that such alterations can be made without changes to form, fit or function of the product. All trademarks in this material are property of Danfoss A/S or Danfoss group companies. Danfoss and the Danfoss logo are trademarks of Danfoss A/S. All rights reserved.

AJ389643274589en-010301
Danfoss Drives Oy © 2026.06

1 7 2 F 6 4 0 9 C