iC7 Series Grid Converter with Grid Codes

iC7-Hybrid



Explore our solutions
www.danfoss.com

Contents

1. INTRODUCTION TO IC7-HYBRID 9

1.1. OVERVIEW 9

2. GRID CONVERTER WITH GRID CODES APPLICATION SOFTWARE OVERVIEW 10

2.1. GRID CONVERTER WITH GRID CODES APPLICATION INTRODUCTION 10
2.2. GRID CONVERTER APPLICATION INTRODUCTION 11
2.3. SUPPORTED FIELDBUS COMMUNICATION PROTOCOLS 14
2.5. GRID CONVERTER OPERATION MODES 15
2.6. APPLICATION MENU STRUCTURE 16
2.6.1. Main Parameter Groups 16
2.6.2. Control Mode and Reference Group 17
2.7. OVERVIEW OF CONTROL PLACES 18
2.7.1. Continue Operation 18
2.7.2. I/O Control 19
2.7.3. Fieldbus Control 19
2.7.4. Local Control 19
2.7.5. PC Control 19

3. QUICK START 20

3.1. QUICK STARTUP 20
3.2. START SEQUENCE 21
3.2.1. Starting when DC-Link Pre-Charge Ready is the MCB Closing Mode 22
3.3. STOP SEQUENCE 24
3.5. STARTING WHEN FILTER ENERGIZATION READY IS THE MCB CLOSING MODE 25
3.6. PARALLELING GRID CONVERTERS 27
3.6.1. Drooping when paralleling with a common DC link 28
3.7. IC7-HYBRID STRING PCS 300 KVA HARDWARE PARAMETERS 30

4. OPERATION PRINCIPLES 31

4.1. ISLAND MODE 31
4.2. DROOP CONTROL (MICROGRID CONTROL) 32
4.3. DROOP CONTROL WITH BASE LOAD 34
4.4. PQ CONTROL 36
4.5. DC-LINK VOLTAGE CONTROL (AFE CONTROL MODE) 36
4.6. AC CURRENT AND POWER CONTROL 36
4.7. DC CURRENT AND POWER CONTROL 36
4.8. MAINS VOLTAGE SENSORLESS AND SENSORED OPERATION 37
4.8.1. Line Filter Energization and Transformer Magnetization 37
4.8.2. Closed Loop AC Voltage Control 37
4.9. DC CURRENT AND POWER CONTROL 38
4.10. DC-LINK CURRENT CONTROL 38
4.11. TRANSFORMER-INTERACTIVE CONTROL 41
4.12. BLACK START AND BLACKOUT PREVENTION 43

5. MONITORING SIGNALS 43

5.1. MONITORING SIGNAL TABLES 43
5.1.1. Basic monitoring 43
5.1.2. Control mode and reference monitoring 45
5.1.3. Limit monitoring 45

5.1.4. Start and Stop monitoring. 45
5.1.5. Control place monitoring 45
5.1.6. Converter output monitoring 46
5.1.7. Grid Monitoring 46
5.1.8. DC-Link Monitoring 46
5.1.9. Converter Control Monitoring 46
5.1.10. Protection monitoring 47
5.1.11. Custom Status Word monitoring 47
5.1.12. Power unit monitoring 47
5.1.13. Cooling Fan monitoring 47
5.1.14. Fieldbus process data monitoring 48
5.1.15. Grid Code monitoring 48
5.2. MONITORING SIGNAL DESCRIPTIONS 49
5.2.1. Basic monitoring 49
5.2.2. Operation mode and reference monitoring 63
5.2.3. Limit monitoring 65
5.2.4. Start and Stop monitoring. 66
5.2.5. Control place monitoring 67
5.2.6. Converter output monitoring 67
5.2.7. Grid Monitoring 68
5.2.8. DC-Link Monitoring 69
5.2.9. Converter Control Monitoring 69
5.2.10. Protection monitoring 70
5.2.11. Custom Status Word monitoring 72
5.2.12. Power unit monitoring 72
5.2.13. Cooling fan monitoring 72
5.2.14. Fieldbus process data monitoring 73
5.2.15. Grid Code Monitoring 77

6. APPLICATION PARAMETER LISTS 79

6.1. BASIC PARAMETERS 79
6.2. CONTROL MODE AND REFERENCES 79
6.2.1. Control mode 79
6.2.2. Grid Frequency Reference 80
6.2.3. Grid Voltage Reference 81
6.2.4. Grid Current Reference 82
6.2.5. Grid Power Reference 82
6.2.6. DC-Link Voltage Reference 83
6.2.7. DC-Link Current Reference 83
6.2.8. DC-Link Power Reference 83
6.3. LIMITS 84
6.3.1. Grid Current Limit 84
6.3.2. Grid Power Limit 84
6.3.3. Short Term Current Injection 84
6.3.4. DC-Link Voltage Limiters 85
6.4. I/O INPUTS 86
6.4.1. I/O Digital Inputs 86
6.4.2. I/O Analog Inputs 86
6.5. I/O OUTPUTS 87
6.5.1. Digital Outputs 87
6.5.2. Delayed Digital outputs 87
6.5.3. Analog outputs 88
6.6. START AND STOP SETTINGS. 88

6.6.1. Start Settings 88
6.6.2. Quick Stop 88
6.6.3. Pre-Charge 89
6.6.4. Main Circuit Breaker 89
6.6.5. LCL-Filter Energization 89
6.7. CONTROL PLACES 90
6.7.1. Control Place Settings 90
6.7.2. Local Control 90
6.7.3. I/O Control 90
6.7.4. Fieldbus Control 90
6.8. CONVERTER CONTROL 91
6.8.1. Modulation 91
6.8.2. Advanced Grid Control 91
6.8.3. Advanced DC-Link Control 92
6.8.1. Power Unit Settings 92
6.8.2. Cooling Fan Control 92
6.8.3. LCL-Filter 92
6.9. PROTECTION AND RESPONSES 93
6.9.1. General settings 93
6.9.2. Misc. Responses 93
6.9.3. External Event 93
6.9.4. Cooling Monitor 93
6.9.5. Measured temperature protection 94
6.9.6. Thermistor monitoring 96
6.9.7. Live Zero 96
6.9.8. Fieldbus protection 96
6.9.9. HMI Connection Loss 97
6.9.10. Cooling Fan Supervision 97
6.9.11. Limit Supervision 97
6.9.12. Grid Frequency Supervision 97
6.9.13. Grid Voltage Supervision 97
6.9.14. Missing Grid Phase 97
6.9.15. Pre-Charge Monitoring 98
6.9.16. Surge Protection 98
6.10. EXTERNAL GRID SYNCHRONIZATION 98
6.11. GRID CODE PARAMETERS 99
6.11.1. General Settings 99
6.11.2. Disconnection 100
6.11.3. Connection and Reconnection 103
6.11.4. Reactive Power Functions 104
6.11.5. Reactive Current Functions 106
6.11.6. Active Power control 107
6.11.7. Limit Controls 109
6.11.8. Field testing 111
6.12. MAINTENANCE & SERVICE 112
6.13. EVENTS 112
6.13.1. Event Simulation 112
6.14. OPERATION COUNTERS 112
6.15. TOOLS 112
6.15.1. Cyber security 112
6.15.2. Troubleshooting 112
6.16. CUSTOMIZATION 112

6.16.1. Basic Setting 113
6.16.2. Custom Status Word 113

7. APPLICATION PARAMETER DESCRIPTION 114

7.1. BASIC PARAMETERS 114
7.2. CONTROL MODE AND REFERENCES 119
7.2.1. Control Mode 119
7.2.2. Grid Frequency Reference 121
7.2.3. Grid Voltage Reference 124
7.2.4. Grid Current Reference 127
7.2.5. Grid Power Reference 129
7.2.6. DC-Link Voltage Reference 131
7.2.7. DC-Link Current Reference 133
7.2.8. DC-Link Power Reference 134
7.3. LIMITS 135
7.3.1. Grid Current Limit 135
7.3.2. Grid Power Limit 139
7.3.3. Short-term Current Injection 141
7.3.4. DC-Link Voltage Limiters 143
7.4. I/O INPUTS 145
7.4.1. I/O Digital Inputs 146
7.4.2. I/O Analog Inputs 148
7.5. I/O OUTPUTS 149
7.5.1. General Digital Outputs 149
7.5.2. Delayed Digital Outputs 152
7.5.3. Analog outputs 154
7.6. START AND STOP SETTINGS 156
7.6.1. Start Settings 156
7.6.2. Quick Stop 157
7.6.3. Pre-Charging 158
7.6.4. Main Circuit Breaker 159
7.6.5. LCL-Filter Energization 161
7.7. CONTROL PLACES 162
7.7.1. Control Place Settings 163
7.7.2. Local Control 165
7.7.3. I/O Control 166
7.7.4. Fieldbus Control 167
7.8. CONVERTER CONTROL 168
7.8.1. Modulation 168
7.8.2. Advanced Grid Control 170
7.8.3. Advanced DC-Link Control 173
7.8.4. Power Unit Settings 174
7.8.5. Cooling Fan Control 174
7.8.6. LCL-Filter 175
7.9. PROTECTION AND RESPONSES 176
7.9.1. General setting 176
7.9.2. Misc. Responses 176
7.9.3. External Event 177
7.9.4. Cooling Monitor 179
7.9.5. Measured temperature protection 180
7.9.6. Thermistor monitoring 185
7.9.7. Live Zero 187

7.9.8. Fieldbus protection 188
7.9.9. HMI Connection Loss 192
7.9.10. Cooling Fan Supervision 192
7.9.11. Limit Supervision 194
7.9.12. Grid Frequency Supervision 196
7.9.13. Grid Voltage Supervision 199
7.9.14. Missing Grid Phase 201
7.9.15. Pre-Charge Monitoring 202
7.9.16. Surge Protection 202
7.10. External Grid Synchronization (Menu Index 2.10) 203
7.11. Grid Code parameters 208
7.11.1. General Settings 208
7.11.2. Disconnection 212
7.11.3. Connection and Reconnection 217
7.11.4. Reconnection 218
7.11.5. Reactive Power Functions 219
7.11.6. Reactive Current Functions 229
7.11.7. Active Power Control 233
7.11.8. Limit Controls 245
7.11.9. Calibration 250
7.11.10. Field Testing 251

8. MAINTENANCE & SERVICE (MENU INDEX 3) 252

8.1. Software Information (Menu Index 3.1) 252
8.2. Events (Menu Index 3.2) 252
8.3. Event Simulation (Menu Index 3.2.3) 253
8.4. Operational Counters (Menu Index 3.3) 254
8.5. Tools (Menu Index 3.5) 256
8.5.1. Cyber security 256
8.5.2. Troubleshooting 256
8.6. Backup & Restore (Menu Index 3.4) 257
8.6.1. Backup 257
8.6.2. Restore 257

9. CUSTOMIZATION MENU INDEX 5) 258

9.1. Basic Settings (Menu Index 5.1) 258
9.2. Control Panel (Menu Index 5.2) 258
9.2.1. Readout Screen 1 (Menu Index 5.2.1) 258
9.2.2. Readout Screen 1 (Menu Index 5.2.2) 259
9.2.3. Custom Status Word (Menu Index 5.3) 259

10. OPTION SETTING (MENU INDEX 9) 263

10.1. I/O And Relay Status (Menu Index 9.3) 263
10.2. Digital Inputs/Outputs (Menu Index 9.4) 265
10.2.1. Input T13 (Menu Index 9.4.1) 265
10.2.2. Input T14 (Menu Index 9.4.2) 265

11. FIELDBUS CONTROL IN DETAIL 266

11.1. Fieldbus Control word 1335 268
11.2. Fieldbus Status Word 1307 271
11.3. Microgrid Control Word 1500 272
11.4. Grid Control Status Word 6540 273

11.5. Application Specific Status Word 1 274
11.6. Application Specific Status Word 2 275
11.7. Fault Status Word 1 276
11.8. Fault Status Word 2 277
11.9. Warning Status Word 1 278
11.10. Warning Word 2 279
11.11. Grid Ctrl. Status Word 280
11.12. Grid Ctrl. Ready Status Word 281
11.13. Application Ready Status Word 282
11.14. Limit Control Status Word 283
11.15. Ext. Grid Status Word 284
11.16. General Status Word 01 285
11.17. Standby Mode Status Word 286
11.18. DC Contactor Status Word 287
11.19. Grid Ctrl. Mode Selection Status Word 288
11.20. Grid Supervision Status Word 289
11.21. Grid Code State 290

12. CONNECTIVITY 291

Integrated Communication 291
Protocols 293

13. PROTECTION FEATURES 295

13.1. DC-link overvoltage protection 295
13.2. Overtemperature protection 295
13.3. Overcurrent protection 295
13.4. Cooling supervision 295
13.5. Filter temperature protection 296
13.6. Missing phase 296
13.7. Limit Supervision 296
13.8. Quick Stop 296
13.9. Measured Temperature Protection 296

14. PROBLEM SOLVING 298

15. FAULTS AND WARNINGS 299

1 Introduction to the Application Guide

1.1 Version History

This guide is regularly reviewed and updated. All suggestions for improvement are welcome.

The original language of this guide is in English.

Version	Remarks	Software Version
AB566232147932en-010101	General Release 1	Application software version 1.2.5 Firmware version 5.36.4

1.2 Purpose of this Application Guide

This application guide provides information on operating the Grid Converter application of the iC7 series. The application guide provides an overview of parameters and value ranges for operating the converter.

In addition to converter parameters, information on the various user interfaces to configure converter parameters, configuration examples with recommended parameter settings, and troubleshooting steps are included in the application guide.

Intended Audience

The intended audience of the application guide is trained personnel, automation engineers, and configurators with experience in operating with parameters and with basic knowledge of AC drives.

1.3 Additional Resources

Additional resources are available with related information.

The iC7-Hybrid PROFINET guide, iC7 Modbus guide, and iC7 EtherCAT guide include information on how to configure the fieldbus.

The Design Guide provides information about the capability and functionality to design power conversion systems with Danfoss iC7 series.

The Safety Guide provides important safety information related to iC7 series.

The Installation Guide covers the mechanical and electrical installation of power converters.

1.4 Safety Symbols

The following symbols are used in documentation and products.

DANGER

Indicates a hazardous situation which, if not avoided, will result in death or serious injury.

WARNING

Indicates a hazardous situation which, if not avoided, could result in death or serious injury.

CAUTION

Indicates a hazardous situation which, if not avoided, could result in minor or moderate injury.

NOTICE

Indicates information considered important, but not hazard-related (for example, messages relating to property damage).

	ISO warning symbol for general warnings
	ISO warning symbol for hot surfaces and burn hazard
	ISO warning symbol for high voltage and electric shock
	Symbol for indicating the required discharge time of the capacitors in the product.
	ISO action symbol for referring to the instructions

Danfoss Drives Oy © 2026.07

1. Introduction to iC7-Hybrid

1.1. Overview

iC7-Hybrid is an enabler in electrification and hybridization applications. iC7-Hybrid covers all power conversion needs in low voltage AC and DC systems. iC7-Hybrid can be used to integrate diverse energy sources and energy storage to a utility grid, microgrid, or DC distribution. Some of the typical applications include:

- peak shaving
- time shifting
- backup power
- grid forming
- power quality
- marine shore supply

The following application software is available in iC7-Hybrid:

- **Grid Converter:** Grid Converter is a dedicated power converter for grid forming, advanced grid control, and bi-directional AC/DC power conversion. Grid Converter is an ideal inverter solution for smart grid applications such as micro grid forming, AC coupled energy storage, shaft generator grid interface, and other flexible AC/DC or AC/AC power conversion applications.
- **DC/DC Converter:** DC/DC Converter is a bi-directional power converter, enabling interconnection of two direct current (DC) systems having different voltage levels. Some of the benefits of the DC/DC converter are a wide source voltage range and the possibility for accurate current, voltage, or power control. The DC/DC converter overcomes the mismatches between the operating voltage ranges of the energy source and the system DC voltage and enables the flexible combining of different power source technologies in one system.
- **Generator:** Generator is a multipurpose inverter targeted for the power generation and advanced multi-purposes use cases in marine vessels. It can be used to control shaft generators, auxiliary generators and motors in vessels as well as shore connection to the electric grid at harbor. The Generator application provides the interface between variable speed AC power generation or motor and the DC bus of the system. The same physical hardware can be used for motor/generator control as well as the on-board shore connection.
- **Grid Converter with Grid Codes:** The Grid Converter with Grid Codes application is an extension of the Grid Converter application including the grid code functionality. Grid code compliance enables power generation to a utility power grid.

Table 1: iC7-Hybrid Application Software Compatibility

Product	Application Software	Hardware Compatibility
iC7-Hybrid	Grid Converter	Liquid-cooled System Modules
	DC/DC Converter	Liquid-cooled System Modules
	Generator	Liquid-cooled System Modules
	Grid Converter with Grid Codes	Liquid-cooled System Modules (G7 voltage class), String PCS

Danfoss offers a power converter FMU model for system simulation, which includes full functionality of the power conversion control and application layer. A hardware in the loop (HIL) simulation setup of the iC7 Series controller is also available for real time simulation purposes, such as PLC integration testing.

2. Grid Converter with Grid Codes Application Software Overview

2.1. Grid Converter with Grid Codes Application Introduction

The Grid Converter with Grid Codes application is based on the Grid Converter application with added Grid Code functions.

Grid Code requirements

- P2.2.1.1 ID161 Operation Mode needs to be 6 / Active Current/Power
- P2.2.1.2 ID163 Converter Reference Mode needs to be 1 / Power Control

Grid Code functions are enabled from P2.11.1.1 ID5593 Grid Code Activation, default Enabled. Without proper grid code settings, the converter issues the warning *5824 Grid Code No Settings* and does not allow the converter to start. See parameters:

- P2.11.1.1 No. 5593 Grid Code Activation
- P2.11.1.2 No. 5785 Grid Code Setting Selection
- P2.11.1.3 No. 5786 Grid Code Region Selection

Parameters 2-13 in the same parameter group enable or disable individual grid code functions. All are active by default, while most functions are not active by default.

Disconnection and reconnection parameters have a generic default setting for frequency and voltage.

Grid code parameters do not follow P 2.1.18 2947 Current/Power Positive Direction. Instead, parameters are always entered as a positive signal towards the grid. Internal logic handles sign conversion whenever parameter 2947 Current/Power Positive Direction is changed.

2.2. Grid Converter Application Introduction

Grid Converter is used for grid forming, grid control, and bi-directional AC/DC power conversion. Grid Converter can create an AC grid on its own (Island mode) or operate in parallel with other generating units (droop control/microgrid mode). Active and reactive power control mode (PQ-control) is provided for fast power control.

It is also possible to control AC power by offsetting the droop curve in droop control with base load control mode. Grid forming power control modes have the advantage that the power flow can be controlled, and blackouts prevented, in case other generation is lost in the microgrid. Advanced DC-link voltage control, DC power control, and DC current control modes are also available for DC load applications, such as electrolyzers or motor drives.

Grid Converter can change smoothly from one operating mode to another, which provides flexibility and stability to the power system.

The short circuit current injection feature can be used to activate protective devices when a fault occurs in a microgrid. When a fault is detected, Grid Converter feeds high short-circuit current to the grid, and normal operation continues after the fault is cleared. The overloadability of the Grid Converter can be used to handle direct online motor starting.

The electrical schematic of the Grid Converter is presented in Figures 1 and 2. The schematic is based on the 3-phase inverter topology with a capacitor bank in the DC link. There is also an AC line filter that is filtering the high frequency current produced by the pulse width modulation from the grid current waveforms. The line filter is either an LCL or LC circuit, with a dedicated transformer. The electrical topology enables bi-directional power flow control. Alternating voltage and current are rectified into direct current when power is transferred from the AC system to the DC system. The direct current and voltage are inverted to alternating current when power is transferred from the DC system to the AC system.

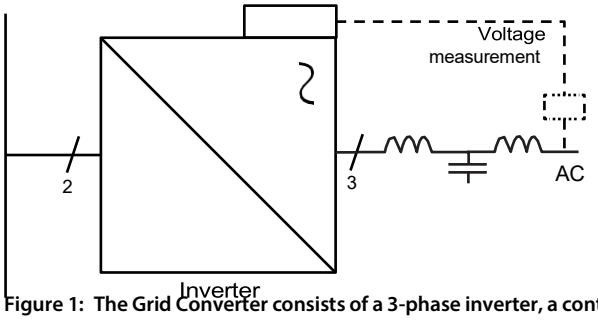

Figure 1: The Grid Converter consists of a 3-phase inverter, a control unit, and an LCL filter. AC voltage measurement is optional.

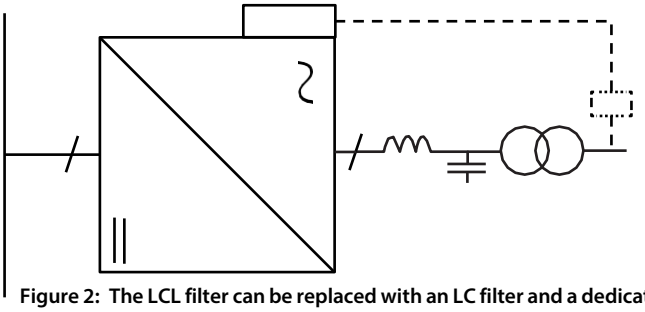

Figure 2: The LCL filter can be replaced with an LC filter and a dedicated transformer. The LC filter and transformer are equivalent to the LCL filter from the point of view of the circuit.

Grid Converter supports both open loop (without auxiliary mains voltage measurement) and closed loop AC voltage and frequency control schemes. The frequency and voltage droop controls handle load

sharing between other generating units, and reactive power management (droop control mode). The droop curves can be offset with references to adjust power when operating in base load mode. The references are given either as active and reactive current or power. DC-link undervoltage and overvoltage controllers can be used to manage the DC-link voltage level in the grid-forming control modes (microgrid). Alternatively, Grid Converter can be operated in the DC voltage control mode (AFE), providing closed loop DC-link voltage regulation. A wide range of limiting and protection functions enable easy and safe power management system design. On-the-fly transitioning between the control modes is possible, to increase system design possibilities and redundancy. Grid Converters can be paralleled with or without communication between converters according to system needs. Paralleling provides flexible scalability of the system into high powers.

The following illustrations depict typical Grid Converter system solutions:

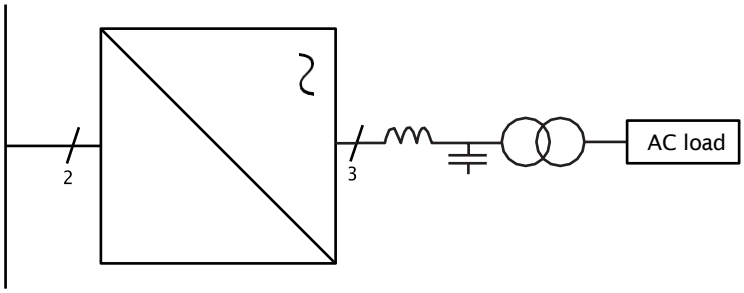

Figure 3: Grid converter for creating and supplying a microgrid system

Typical use cases include an onboard microgrid for marine vessel hotel loads, a local microgrid in rural areas, or a shore supply system.

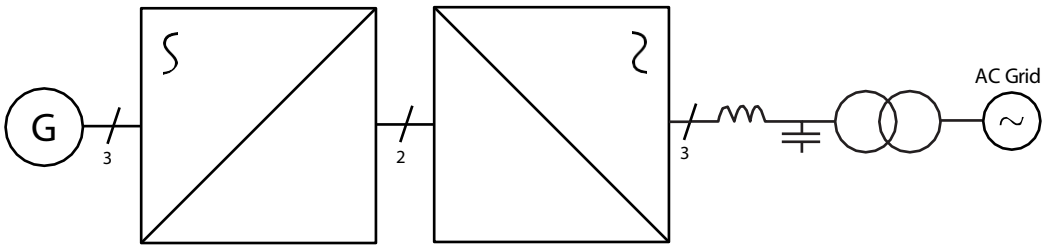

Figure 4: Distributed power generation with Grid Converter as the grid interface.

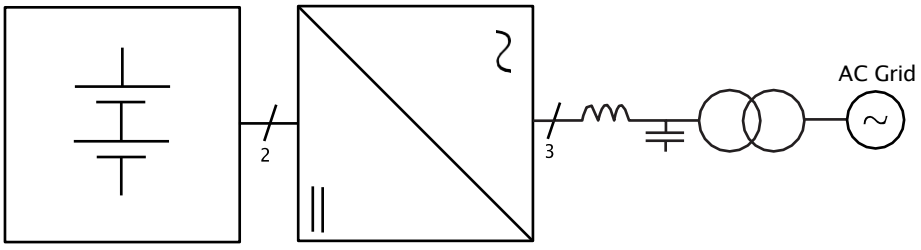

Figure 5: An AC coupled energy storage system

The energy storage is directly connected to the DC link of the grid converter to realize an AC coupled energy storage system

The Grid Converter software includes the primary controls for voltage, frequency, and power, and the converter-level controls for DC-link voltage, power, and current. These features are implemented using converter-level measurements and available option board extensions including the external AC voltage

measurement. Grid Converter can synchronize the local microgrid to an external grid with the help of the voltage measurement option.

The flexible communication interface and wide range of adjustable features support the end users to complete the system with hierarchical or decentralized controls. Power and energy management systems (PMS, EMS) are needed on the system level, since the Grid Converter application software only provides the functions to implement the power conversion control and limitations. If batteries are used with the Grid Converter, a battery management system (BMS) is mandatory for safety. The items supplied by Danfoss are a component in the system and the system integrator is responsible for the system level implementation of the installation.

Overview of the Grid Converter application software functionality is illustrated in Figure 4. The Grid Converter application software provides functions to handle the start and stop sequences from different control places and includes the control of the interfacing circuit breaker and pre-charging circuit. Auxiliary protection features such as filter temperature monitoring and cooling unit supervision are also available. Flexible interfaces are provided towards the upper system, including a configurable fieldbus interface and customizable I/O interfaces. Flexible PC tools and a local control panel are available for the user interface. With the help of these features, the Grid Converter can be smoothly interfaced with external power and energy management systems (PMS, EMS) or with a battery management system (BMS). The Danfoss iC7 control platform offers an application PLC programming feature that allows the user to incorporate additional functionality in the application software that is run on the control unit.

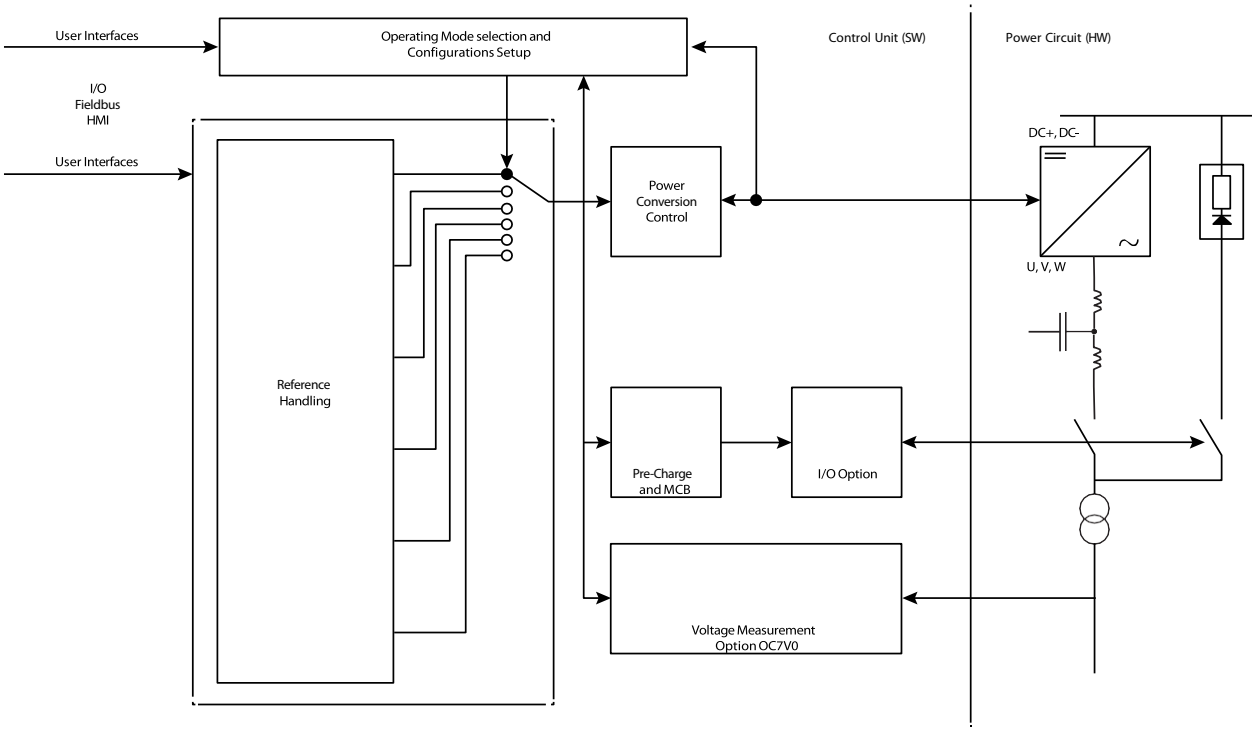

Figure 6: Grid Converter application software overview

2.3. Supported Fieldbus Communication Protocols

Supported fieldbus protocols based on the product configuration:

Table 1: Fieldbus Protocols

Fieldbus Protocol	Availability
MODBUS TCP	Embedded protocol For configuration, refer to the iC7 Series Modbus Operating Guide.
PROFINET	Embedded protocol. Requires a license to activate. For configuration, refer to the iC7-Hybrid PROFINET Operating Guide.
ETHERNET I/P	Embedded protocol. Requires a license to activate. For configuration, refer to the iC7-Hybrid EtherNet/IP Operating Guide.
ETHERCAT	Embedded protocol. Requires a license to activate. For configuration, refer to the iC7-Hybrid EtherCAT Operating Guide.

2.5. Grid Converter Operation Modes

Grid Converter has five operation modes, and the available references and limit controllers with priority order are summarized in the table.

Transitions between the operation modes can be done instantly, for example through the fieldbus control word. As an example, the transition from DC-link voltage control to droop control when the operating mode of a shaft generator system is changed from Power Take In (PTI) to Power Take Out (PTO). Supplementary voltage-limiting controllers and current limits can be enabled or disabled when required. By default, all limit controllers are active for all operation modes. The following table provides an overview of how different modes can be used together with different limit controllers. Supplementary voltage-limiting controllers and current limits can be enabled or disabled when required.

0 Island **Grid Forming**

The primary control objective is to regulate source frequency and voltage to a fixed value, such as when the converter operates in isochronous mode. Active and reactive power is determined by load. Only one isochronous converter can be connected to same grid.

1 Droop **Grid Forming**

Voltage and frequency regulated based on dropping curves. Active and reactive power is determined by load. Parallel converters connected to same grid share load by drooping.

2 Droop with base load **Grid Forming**

Voltage and frequency regulated based on drooping curves. Active and reactive power is determined by load. Droop curves are offset based on current/power references. Parallel converters connected to same grid share load by drooping.

3 PQ Control **Grid Forming**

Active power/current and reactive power/current determined based on upper control system. Parallel converters connected to the same AC bus share the load based on the given references

4 DC Link Voltage (AFE) **Grid Following**

Active power based on DC link load. Reactive power controllable.

5 DC Link Current/Power **Grid Following**

DC-Link active power/current and reactive power/current determined based on upper control system.

6 Active Current/Power **Grid Following**

Active power/current and reactive power/current determined based on upper control system.

2.6. Application Menu Structure

Grid Converter with Grid Codes uses an easy and intuitive menu structure. Monitoring signals are gathered under one menu, mainly following the parameter subgrouping.

Parameters are grouped mainly by their overall functionality. Basic Parameters has most of the parameters that are always needed regardless to what kind of system converter is used.

When using the application for the first time, it is recommended to open all menus to see the included submenus. The menus are structured so that there is no need to remember where one specific parameter is, instead the parameter can be found based on its functionality.

2.6.1. Main Parameter Groups

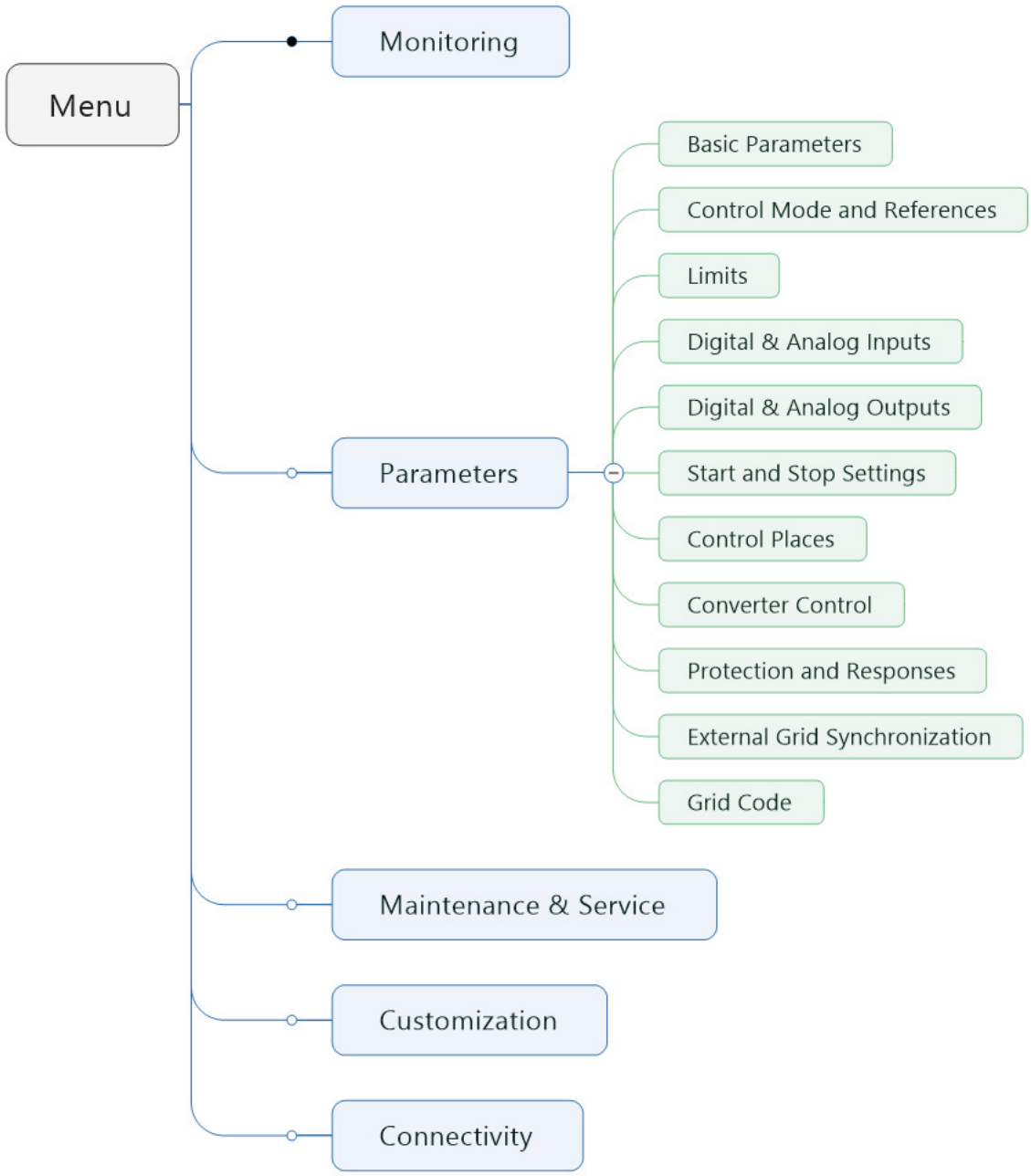

2.6.2. Control Mode and Reference Group

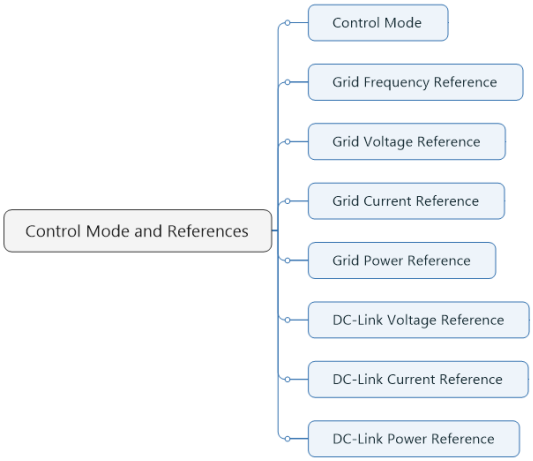

2.7. Overview of Control Places

The converter can be controlled from four different control places:

- PC Control (MyDrive Insight)
- Local Control (control panel)
- I/O Control
- Fieldbus Control

The priority order of the control places if there are simultaneous control requests from PC control and local control, and for control place forcing, is as follows:

1. PC Control
2. Local Control
3. I/O Control
4. Fieldbus Control

Each control place defines the source for start, stop, and event reset commands. The latter depends on parameter 5.5.2.7 Control Place Independent Reset. There are also other commands that are control place specific, depending on the selected control place. The reference which must be followed can be configured by reference selection parameters, independently from the selected control place.

The reference can be selected from the following:

- Preset (Parameter in the menu)
- Fieldbus Process Data
- Analog Input

While in local control or PC control, the reference can only be given as Preset (Parameter in the menu).

2.7.1. Continue Operation

Normally, if the unit is running when the control place is changed, it stops. If the Continue Operation function is enabled for the new control place, the unit continues running when the control place is switched as long as a stop is not requested through the new control place.

Continue Operation can be enabled with parameter 5.5.3.1.3 in local control, parameter 5.5.4.2.1 in fieldbus control, and parameter 5.5.5.1.9 in I/O control.

If State High Start or Rising Edge Start is the selected start mode in the new control place, a low start signal or control word bit also generates a stop request. Therefore the unit does not continue running. State High Start or Rising Edge Start can be selected as the start mode with parameter 5.5.5.1.7 in I/O control and parameter 5.5.4.2.2 in fieldbus control.

2.7.2. I/O Control

I/O control can either be selected with the parameter 5.5.2.8 Remote Control Place or can be forced using the parameter 5.5.2.3 Force I/O Control Input.

While in I/O Control, the converter can be started or stopped with the parameter 5.5.5.1.1 I/O Start Input. A stop command can also be issued with the parameter 5.5.5.1.3 I/O Stop Input. Faults and warnings can be reset while in I/O control with the parameter 5.5.5.1.6 I/O Reset Input.

The start and stop mode of the converter can be configured with the parameter 5.5.5.1.7 I/O Start Mode.

2.7.3. Fieldbus Control

The fieldbus control place can be activated either with the parameter 5.5.2.8 Remote Control Place, or it can be forced with the parameter 5.5.2.4 Force FB Control Input. The fieldbus control place allows you to send control commands based on the fieldbus profile. The fieldbus status word is always available and updated irrespective of the active control place. The fieldbus start and stop mode is configured with the parameter 5.5.4.2.2 FB Start Mode. Start and stop modes are described in the following table.

2.7.4. Local Control

Local control can only be requested from the control panel. The request is always rising edge based, the local control place is requested and released by pressing the Rem/Local button. Only the start and stop commands are possible using the respective buttons in the control panel. However, the Stop button stops the converter irrespective to the active control place. Holding the Stop button for 3 seconds issues a Switch Off command, which opens the main circuit breaker (if it exists).

It is also possible to reset a fault from the active fault screen.

2.7.5. PC Control

PC control can be requested using the PC tool, MyDrive Insight.

The converter can be started and stopped using MyDrive Insight. The Coast Stop button issues a Switch Off command, which opens the main circuit breaker (if it exists). There is also a fault reset button.

3. Quick Start

3.1. Quick Startup

Select the operation mode with parameter 2.2.1.1 Grid Converter Operation Mode (No 161)

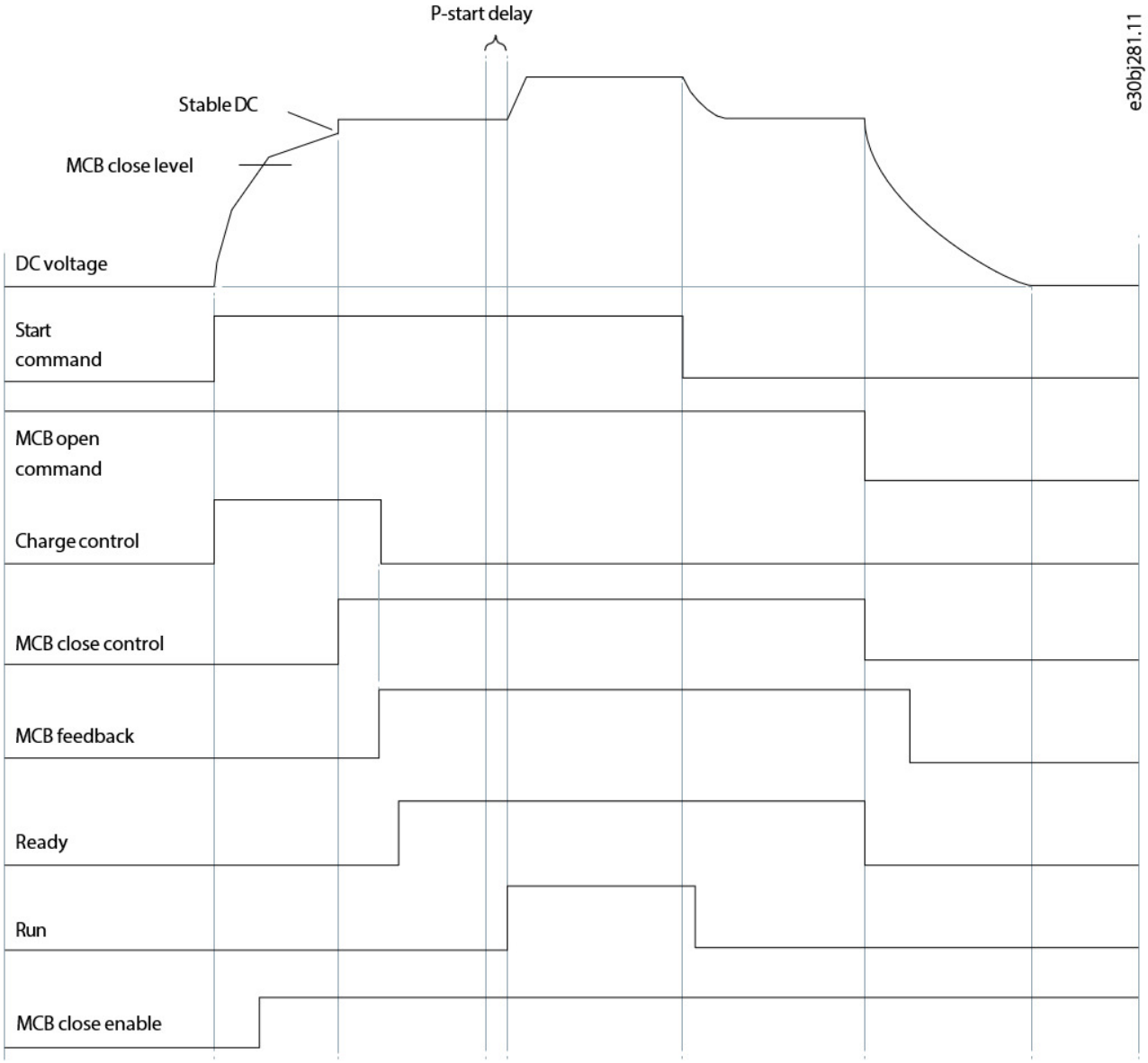

Basic Start and Stop Sequence of Grid Converter

3.2. Start Sequence

The power-up sequence of the grid converter system can be configured. The start sequence and parameters Pre-Charge Ready Level (No. 6566) and MCB Closing Mode (No. 6559) affect the startup behavior. The Main Circuit Breaker closing mode can be configured to be 1 of the following:

- DC-Link pre-charging ready (this is the default selection)
- Start command
- DC-Link pre-charging ready or start command
- LCL filter energized

The DC link pre-charging can be started based on a start command or a dedicated digital input. The start and stop sequence, charging, and the main circuit breaker can be controlled via the fieldbus or the I/O interface.

The stop mode can be configured based on the application requirements. Through this feature, it is possible to achieve a controlled deceleration of the converter output power before the modulation is stopped. The ramp rate can be configured with the parameter Ramp Stop (No. 6791). If this parameter is set to zero, the Ramp Stop feature is disabled, and the converter defaults to an immediate stop of modulation.

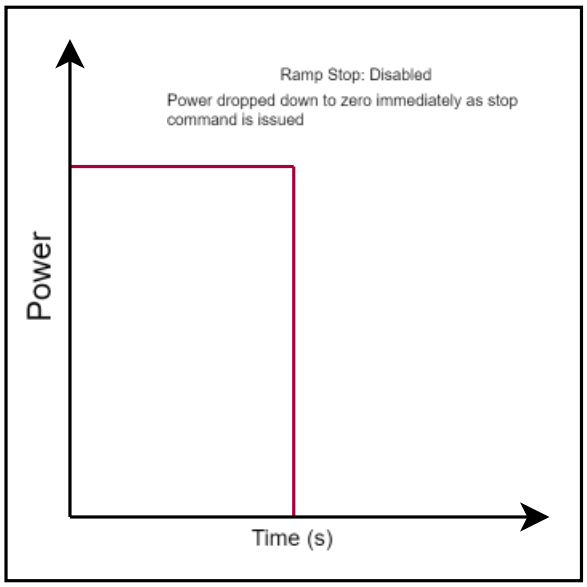

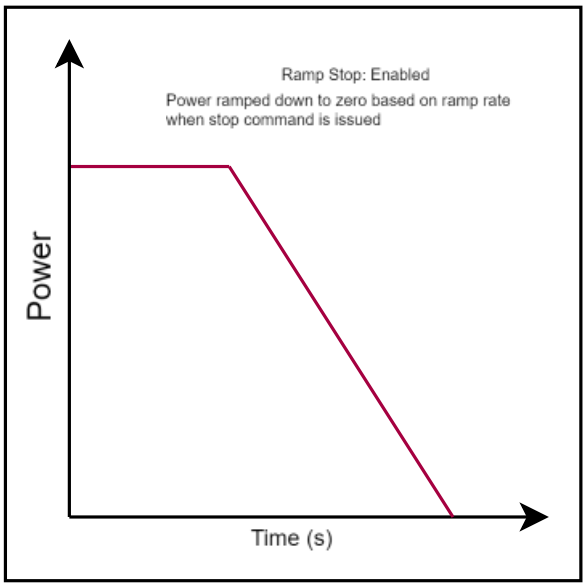

3.2.1. Starting when DC-Link Pre-Charge Ready is the MCB Closing Mode

In a typical startup sequence, the unit is responsible for controlling the DC-link precharging and connecting to the AC grid using the Main Circuit Breaker (MCB) with default settings. The following start and stop sequence illustrations provide an overview on the process conditions and stages.

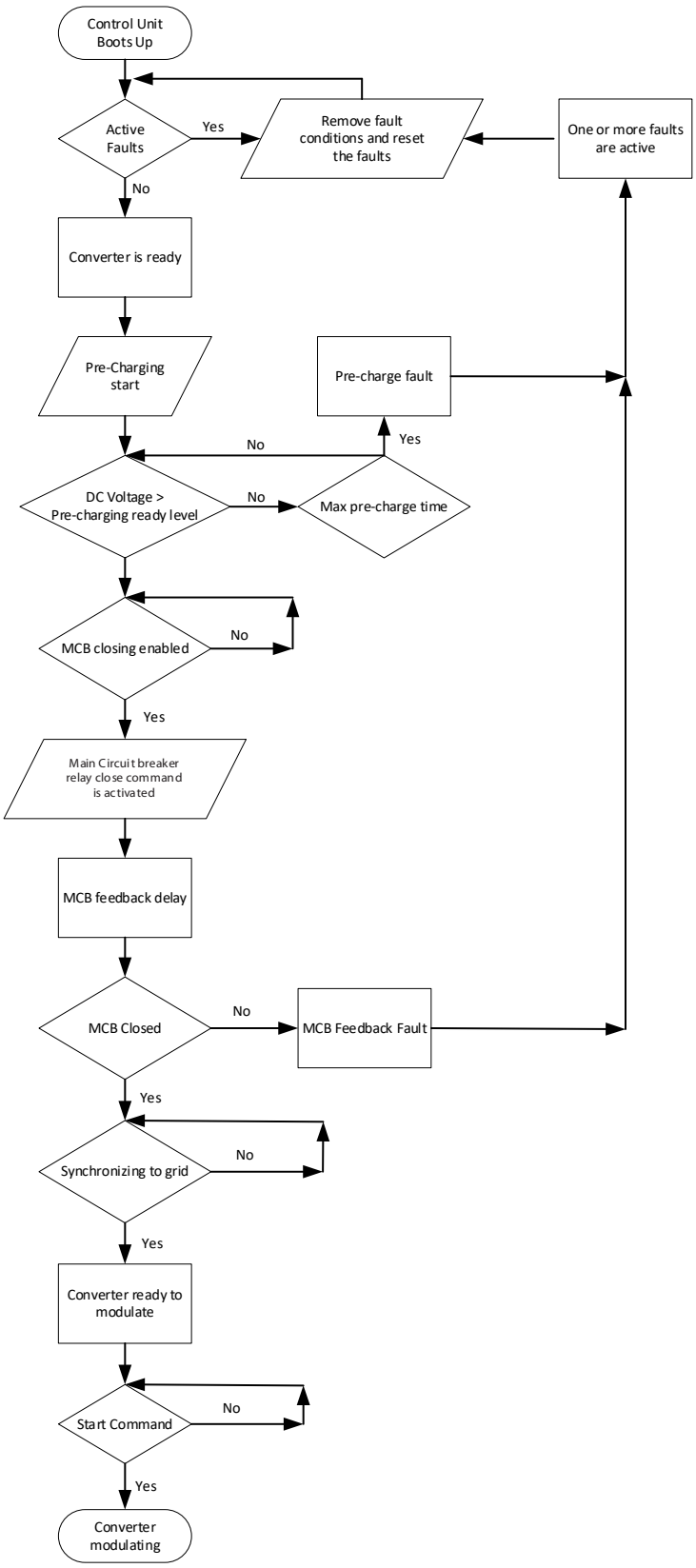

Figure 33: Start Sequence

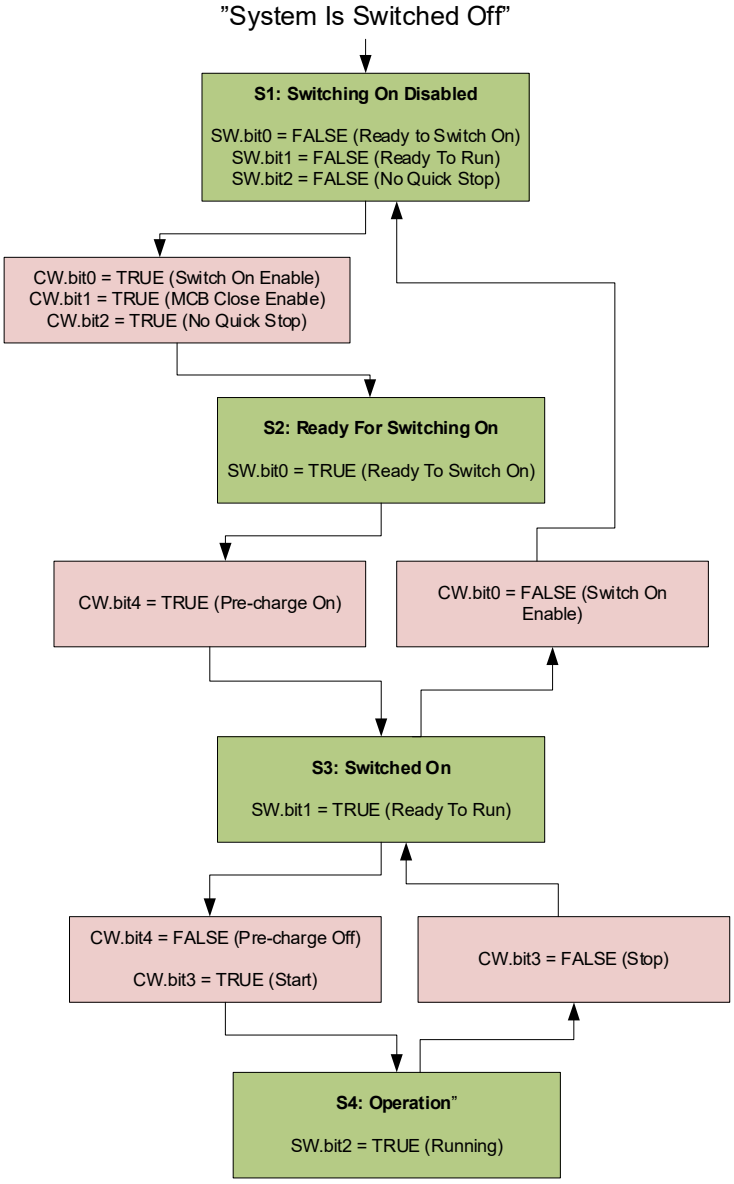
"System Is Switched Off"
S1: Switching On Disabled
SW.bit0 = FALSE (Ready to Switch On)
SW.bit1 = FALSE (Ready To Run)
SW.bit2 = FALSE (No Quick Stop)
CW.bit0 = TRUE (Switch On Enable)
CW.bit1 = TRUE (MCB Close Enable)
CW.bit2 = TRUE (No Quick Stop)
S2: Ready For Switching On
SW.bit0 = TRUE (Ready To Switch On)
CW.bit4 = TRUE (Pre-charge On)
CW.bit0 = FALSE (Switch On Enable)
S3: Switched On
SW.bit1 = TRUE (Ready To Run)
CW.bit4 = FALSE (Pre-charge Off)
CW.bit3 = TRUE (Start)
CW.bit3 = FALSE (Stop)
S4: Operation"
SW.bit2 = TRUE (Running)

3.3. Stop Sequence

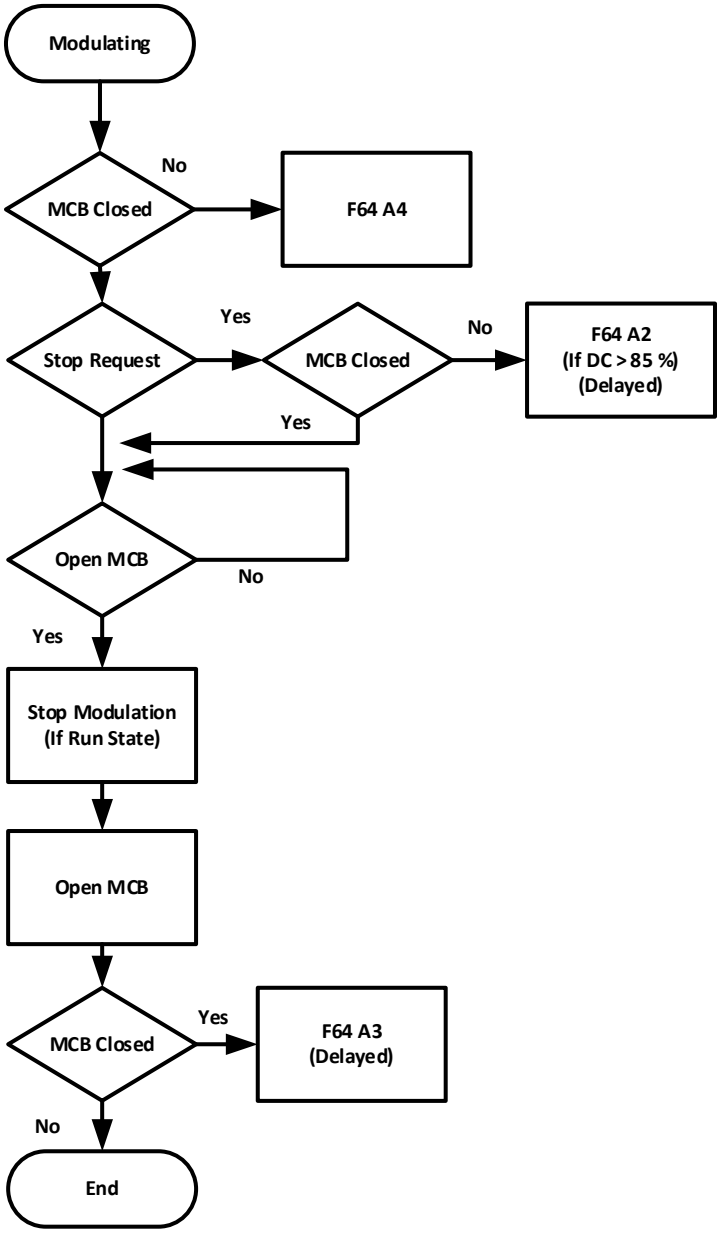

3.5. Starting when Filter Energization Ready is the MCB Closing Mode

In this mode, the DC link is charged first, and the converter is allowed to run to pre-energize and synchronize the voltage of the LCL filter before the command to close the main circuit breaker is issued. An external voltage measurement board is required for this mode. The voltage measurement board must be connected behind the main circuit breaker. A typical startup sequence, when the unit is responsible for controlling the DC-link pre-charging and connecting to the AC grid after the filter is energized, is illustrated in Figure 36.

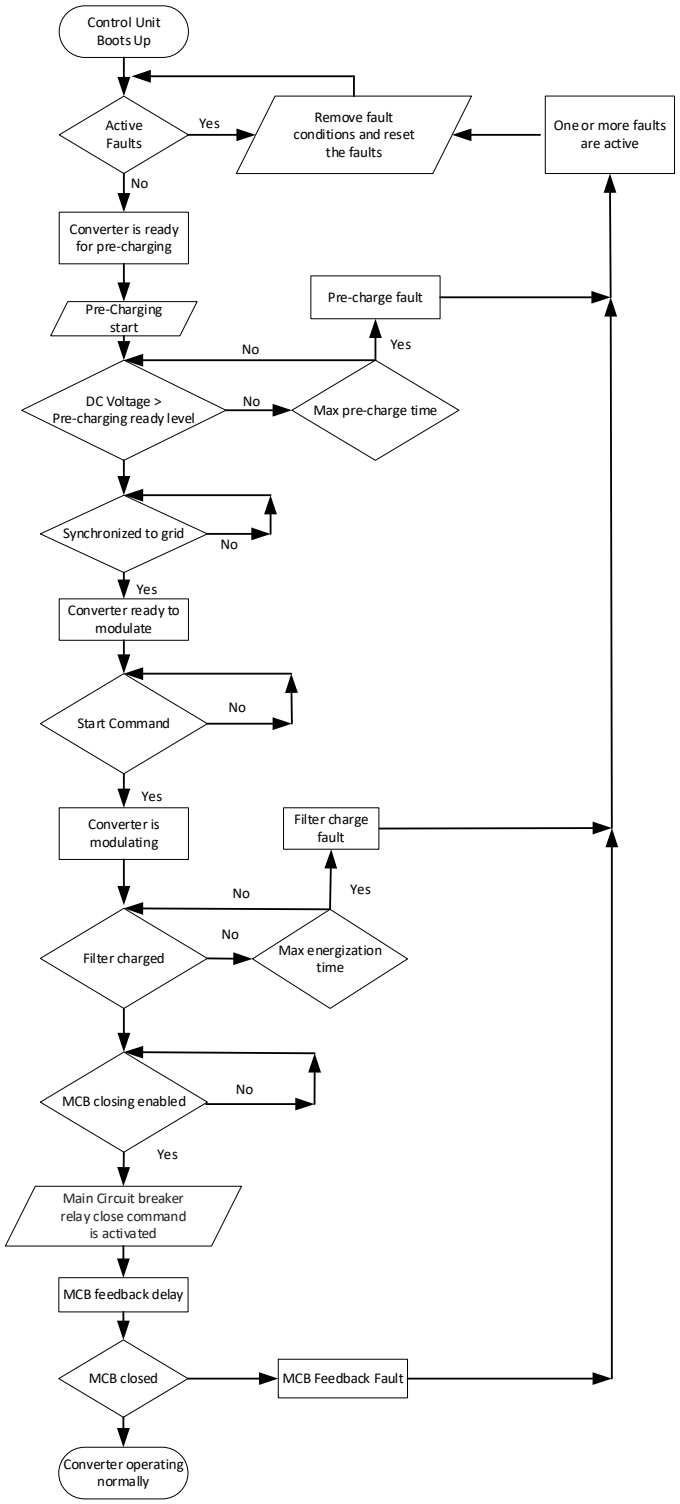

Figure 36: Start Sequence when Filter Energization Ready is the MCB Closing Mode

This mode reduces the inrush current from the grid when the main circuit breaker is closed. Before the main circuit breaker is closed, the filter voltage is ramped up to the measured grid voltage during the time defined by parameter 3.6.6 Filter Voltage Ramp Time. If filter energization takes more than the time defined by parameter 3.6.7 Max. Filter Energization Time, filter energization fails and causes a fault. DC-link pre-charging has a minimum pre-charging time, which can be set using parameter 5.25.2.3 Min. Pre-Charge Time. The minimum pre-charging time must be configured according to the dimensioning of the pre.charging circuit

3.6. Paralleling Grid Converters

Paralleling refers to a system in which multiple Grid Converters are connected to the same DC bus or to the same AC bus or microgrid. Several power units can operate under one control unit using a star coupler board, and this configuration is considered a single Grid Converter from the system level point of view. Grid Converter Design Guide describes the technical considerations for paralleling in depth, and the electrical system designer must refer to it when designing a parallel system. Typical paralleling configurations are illustrated in the following figure.

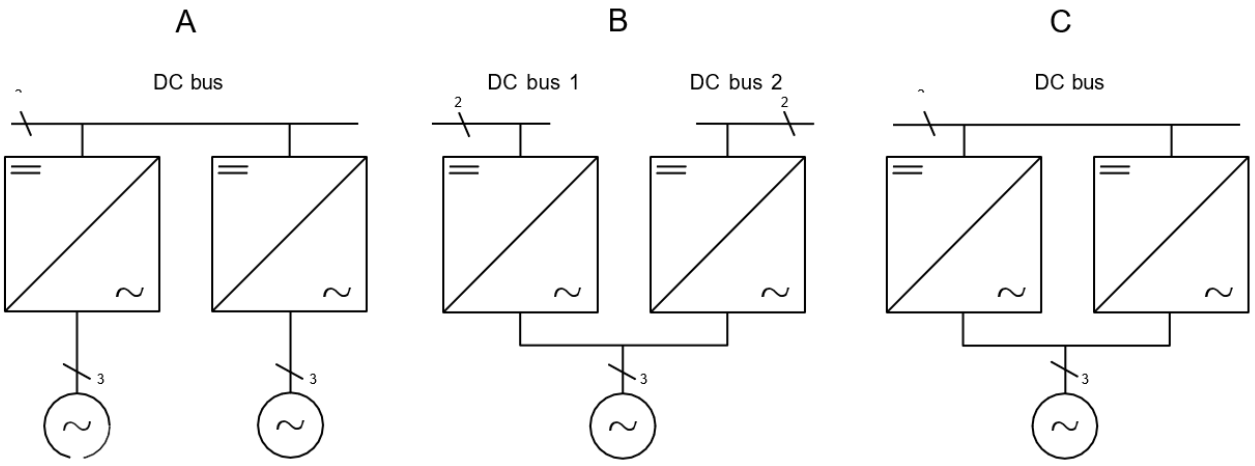

Figure 24: Topologies: A) Common DC bus B) Common AC grid C) Common DC bus and AC bus D) Same as topology C, but the converters have their own transformers

	A: Common DC bus	B: Common AC grid	C: Common DC bus and AC grid	D: Common DC bus and AC grid with transformers
DC voltage control (or undervoltage/ overvolt- age controller)	DC voltage droop		Paralleling synchronization mode: Without communication between converters DC voltage droop Same switching frequency Same reactive reference Same modulator type This feature may have hardware dependencies.	This can be considered the same as option A
Droop control (Micro- grid mode)		AC voltage and fre- quency droop	Paralleling synchronization mode: Without communication between converters DC voltage and frequency droop. Same switching frequency Same modulator type This feature may have hardware dependencies.	
AC/DC power/ current and droop control base load control modes			Paralleling synchronization mode: Without communication between converters Same references for all Converters Same switching frequency Same modulator type This feature may have hardware dependencies.	

3.6.1. Drooping when paralleling with a common DC link

Drooping is available for DC-link voltage control and DC-link undervoltage and overvoltage control. It enables load sharing between parallel converters with individual control units and without the need for control-to-control communication. The droop modifies the reference voltage as a function of output current. The full output current is never provided when the controlled voltage is at the reference. This guarantees that the integral action of the voltage controllers does not lead to uneven load sharing due to voltage

measurement tolerances. Instead, the converters are sharing the load autonomously independent of the number of parallel converters. The droop gain k, or the slope, is defined as the ratio of voltage change to current change, as follows: k= ΔV(%)/ΔI(%)

where

k = droop gain

ΔV(%) = change in controlled voltage, in percentage ΔI(%) = change in controlled current, in percentage

The final voltage reference modified by the droop is: Vref,final(%) = Vref(%) – kI(%) = Vref(%) – ΔVref (%) where

Vref (%) = the given voltage reference percentage ΔVref(%) = the effect of the droop in the reference ΔVref,final(%) = the final reference, affected by the droop

The droop slope produced on the reference is shown in the following figure when k = 4.

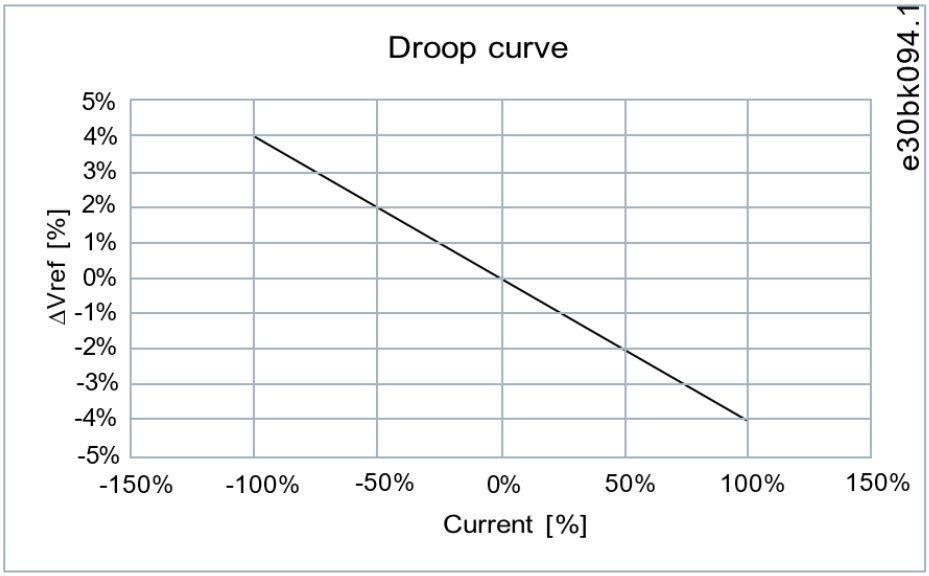

Figure 25: Example of Droop with k = 4

If the voltage must stay unchanged regardless of the load, an upper control system (typically a power management system) is required to monitor the load or voltage and adjust the common voltage reference to all units. For example, in a system where droop is set according to Figure 25 the voltage decreases by 4% when the load current is 100%. To maintain the voltage in the original reference, the upper control system monitors the system, and in this case increases the voltage reference by 4% for all parallel units.

This behavior is exemplified in Figure 26. The points A-B-C-D describe the behavior with positive current, and A-E-F-G with negative current. In the beginning, the operating point is A with no load. Next, the current increases to 100% positive output, the operating point moves to B, and the voltage reference is offset by –4%. The upper control compensates the droop effect by increasing the centralized voltage

reference given to all voltage controlling units and the operating point moves to C. If the system is unloaded, the operating point moves from C to D and the upper control must adjust the centralized reference to return the system back to the desired voltage. The points A-E-F-G-A illustrate the behavior in the case of negative current.

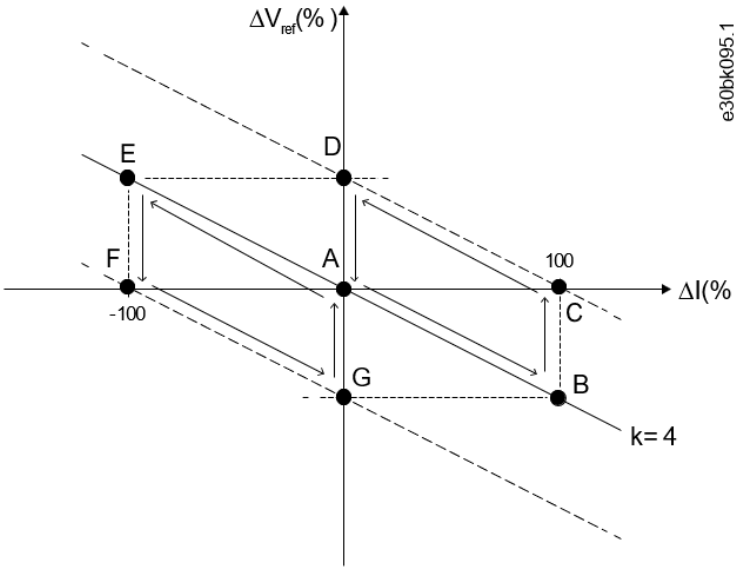

Figure 26: Drooping and Compensation of the Offset by Secondary Control

When DC-link voltage drooping is enabled, the DC voltage decreases as a function of the load current. The DC voltage reference and drooping gain are set so that the minimum boost requirement is satisfied. For example, if the minimum boost is set to 102% and the drooping is set to 3%, the DC voltage reference is set to 106% to cover the 110% overload.

3.7. iC7-Hybrid String PCS 300 kVA hardware parameters

String PCS 300 kVA hardware has internal MCB control and voltage measurement. Therefore, the following parameters have no effect on the application when String PCS 300 kVA hardware is used.

2.1.4	6539	Grid Voltage Feedback Source
2.1.5	6541	Filter Voltage Feedback Source
2.1.6	6547	Filter Voltage Feedback Location
2.1.14	6133	Grid Voltage Feedback Location
2.4.1.13	6552	MCB Feedback Close Input
2.4.1.14	6553	MCB Feedback Open Input
2.6.3.1	6563	Pre-Charge Request Output
2.6.4.1	6551	MCB Close Output
2.6.4.5	6555	MCB Close Pulse Output
2.6.4.6	6556	MCB Open Pulse Output

4. Operation principles

4.1. Island mode

In Island mode, the grid converter forms and powers the AC grid. Drooping is disabled and thus the unit operates with fixed voltage and frequency as per the references. The unit cannot operate in parallel with other island mode units without converter-to-converter communication. The other power-generating units in the system operate in the grid-following mode, or use some other method for PQ control. In island mode, the converter always starts with voltage ramp, meaning that the voltage is ramped from zero to the reference to energize the AC system.

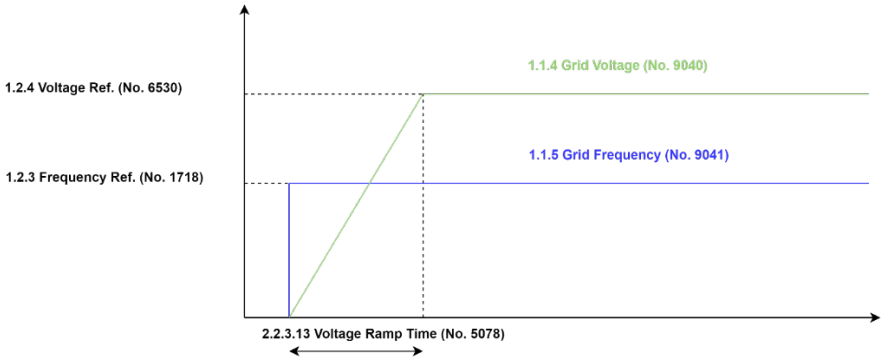

Figure 7: Island Mode Start

Voltage and frequency reference sources can be configured as nominal grid values or references can be set through the fieldbus interface. The digital potentiometer makes it possible to adjust references, for example using the fieldbus control word. The U/f curve and voltage and frequency ramps define the internal grid voltage and frequency reference, which are then fed to voltage and current controllers. DC-link overvoltage and undervoltage controllers and current limit controllers are available in island mode.

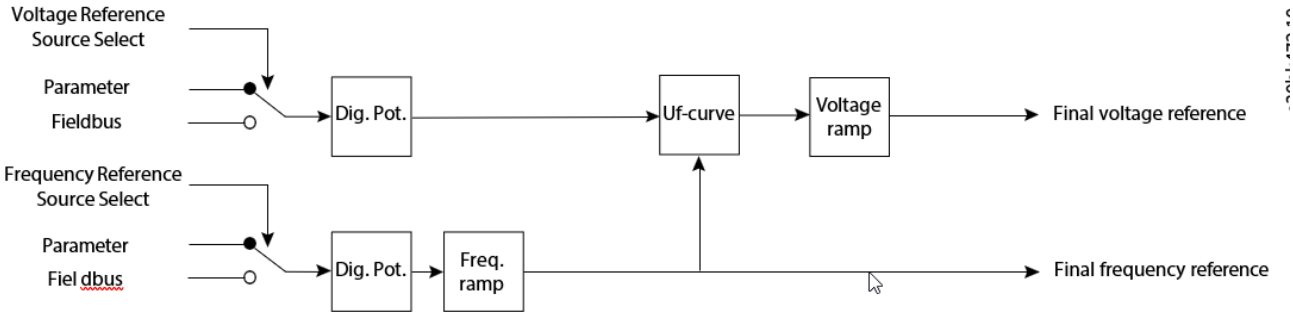

Figure 8: Voltage and Frequency Reference Chain

4.2. Droop Control (Microgrid Control)

In Droop Control, also called microgrid control, the grid converter operates using AC grid frequency and voltage drooping which guarantees active and reactive power sharing between other generating units.

The voltage and frequency reference source can be programmed to be nominal grid values, or the reference can be given through the fieldbus interface. The digital potentiometer makes it possible to adjust references, for example using the fieldbus control word. The u/f curve and voltage and frequency ramps, as well as the droops, define the internal grid voltage and frequency reference, which are then fed to voltage and current controllers.

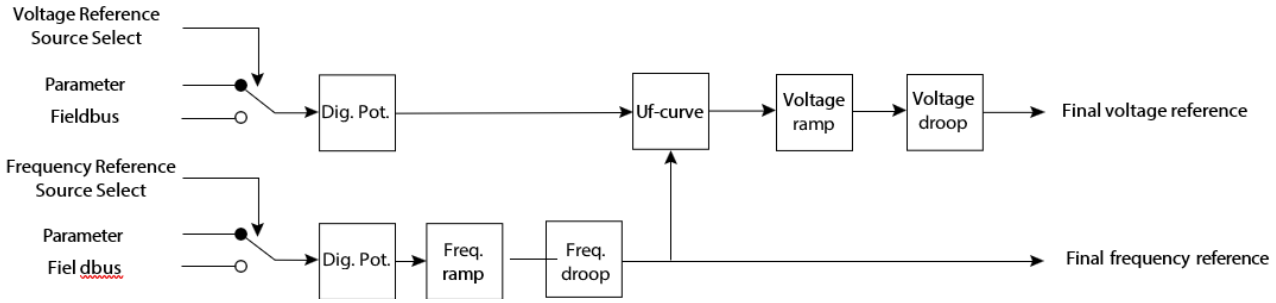

Figure 9: Reference Chain in Droop Control

In droop control mode, the converter starts with the detected grid voltage and frequency before ramping them to given references. When grid voltage is not detected, the voltage ramp is applied similarly as in Island mode. The digital potentiometer function provides high or low frequency (power) up and down and voltage up and down interfaces, and resets the reference to measured values before start. Then it is possible to start with zero active and reactive power. DC-link overvoltage controllers, undervoltage controllers, and current limit controllers are available in droop control mode.

Examples of frequency and voltage droop curves are shown in Figure . The figures are derived by defining the positive current direction as being from AC towards DC, which is the default configuration in the software. The positive current direction is selectable and can be configured in the application software. The curves show that the frequency droops as a function of active current and the voltage as a function of reactive current. Droop characteristics are defined by nominal values, droop gains, and the nominal grid current as follows:

$$f - f^* = -k_f I_{act}$$

$$U - U^* = -k_U I_{react}$$

where f and f* are actual and reference frequency, U and U* are actual and reference grid voltage, I_{act} and I_{react} are the active and the reactive currents. The frequency and voltage droop gains are:

$$k_f = \Delta f / \Delta I_{act}$$

$$k_U = \Delta U / \Delta I_{react}$$

where Δf and ΔU are the change in frequency and voltage and ΔI_{act} and ΔI_{react} are the change in active and reactive current. In the software, the droop gains define the frequency and voltage change when the active and reactive current is equal to nominal grid current, respectively.

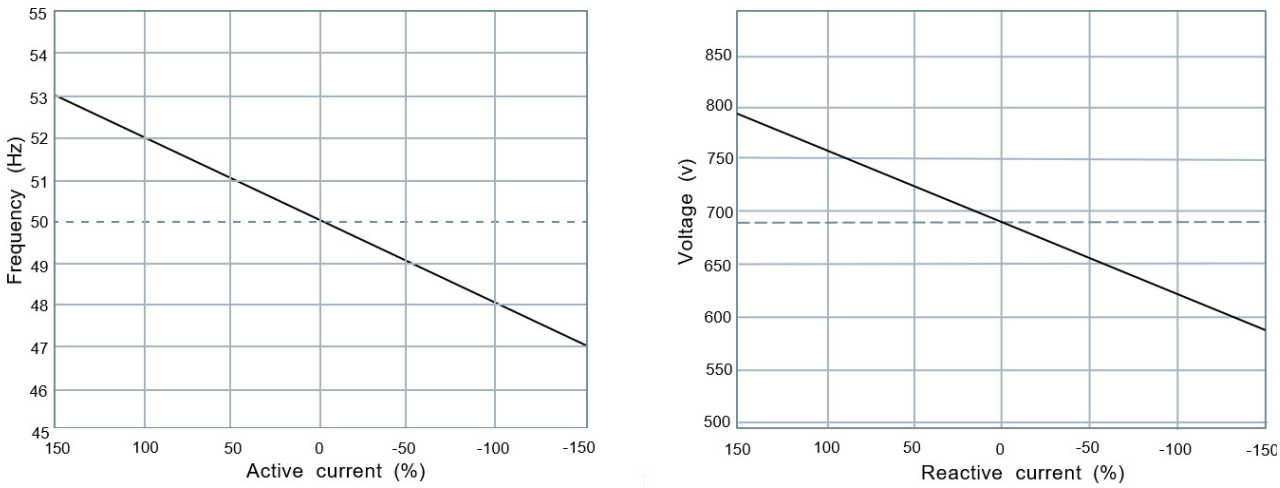

Figure 9: Frequency and Voltage Droop (Frequency Droop 2 Hz and Grid Nominal Frequency 50 Hz, Voltage Droop 10% and Grid Nominal Voltage 690 V)

4.3. Droop Control with Base Load

Fundamentally, the droop with base load operating mode is similar to droop mode, with the exception that voltage and frequency references are offset based on specified current or power reference. The base load references can be specified as active and reactive current or active and reactive power. Active current reference affects the frequency reference, and reactive current reference affects the voltage reference. The following picture shows a block diagram explaining the basics of droop control with base load.

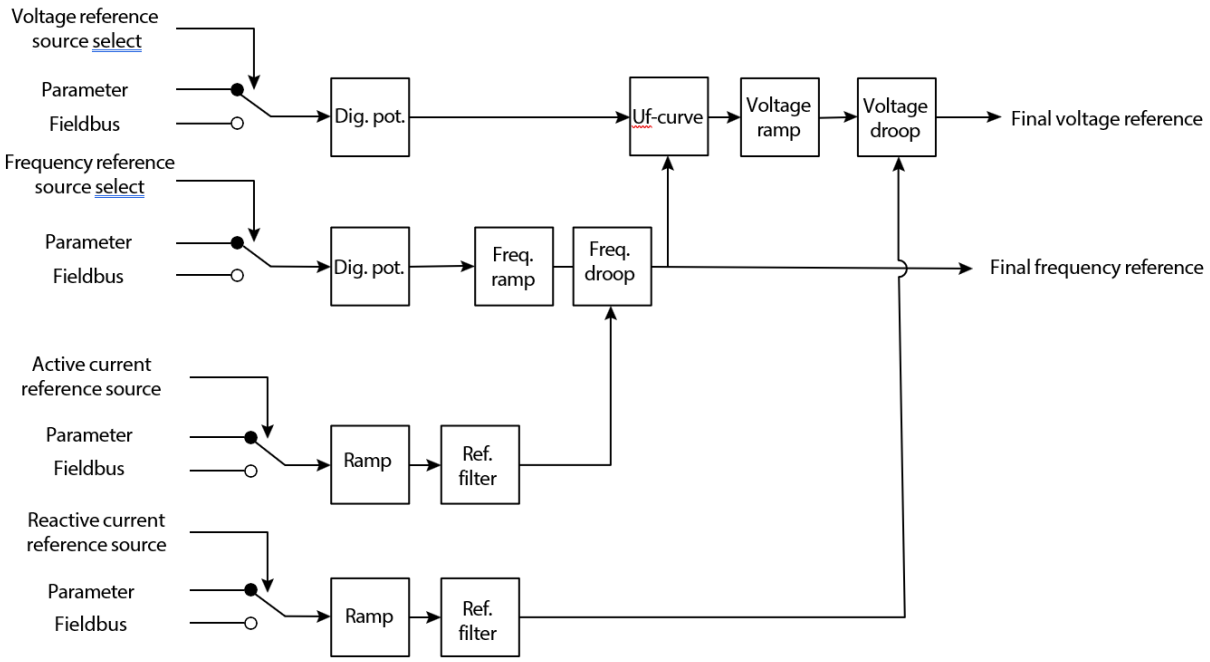

Figure 10: Droop Control with Base Load

Droop curve offsetting based on active and reactive current reference is illustrated in Figure . Increasing the active current reference decreases the frequency reference and thus increases the power taken from the grid. Increasing the reactive current reference decreases the voltage, and Grid Converter draws more reactive power from the grid. Droop characteristics with base load are defined as:

$$f - f^* = -k_f(I_{act} - I_{act}^*)$$
$$U - U^* = -k_U(I_{react} - I_{react}^*)$$

and

$$k_f = \Delta f / \Delta I_{act}$$
$$k_U = \Delta U / \Delta I_{react}$$

where Δf and ΔU are the change in frequency and voltage, and ΔI_{act} and ΔI_{react} are the change in active and reactive current. In the software, the droop gains define the frequency and voltage change when the active and reactive current is equal to the nominal grid current, respectively.

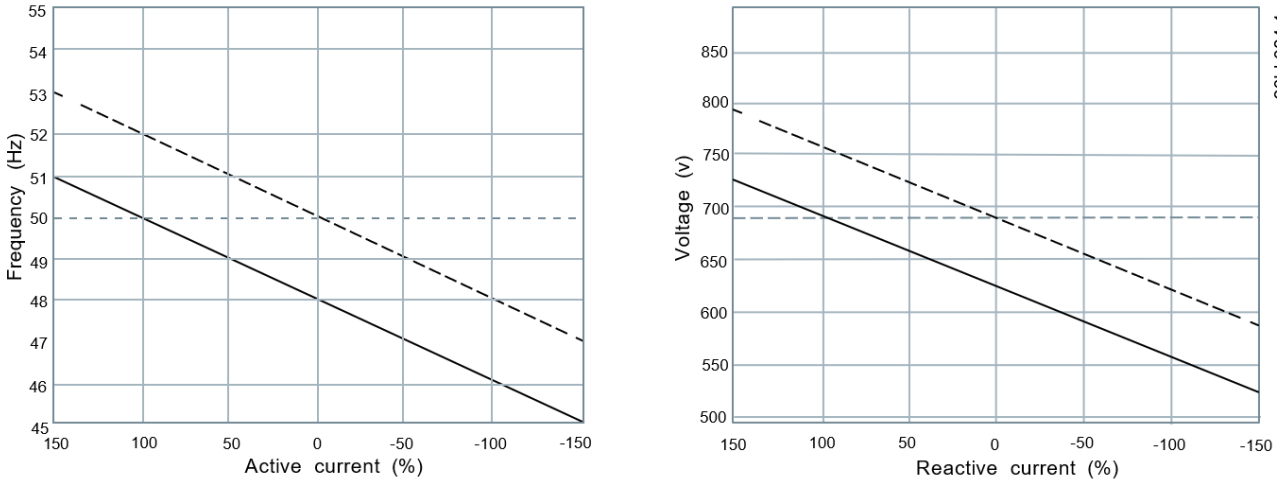

Figure 11: Droop with Base Load compared to the Original Droop.

Solid curves show droop with base load (active reference 100% and reactive reference 100%). Dashed curves are the original droop curves.

Base load control can be characterized as an open loop power control mode. Actual power follows the reference if the grid can be regarded as isochronous (fixed frequency) and the frequency is unaffected by the changes in the output of the grid converter. Similarly, actual reactive power follows the reactive reference only if the grid voltage magnitude is not affected by the Grid Converter reactive power output.

4.4. PQ Control

In PQ-control control mode, the frequency and voltage are actively controlled, so that grid converter follows the specified active and reactive current or power references. That means it is a closed loop power control mode. The references can be given for active and reactive current or active and reactive power. DC-link overvoltage and undervoltage controllers and current limit controllers are available.

PQ Control is based on the grid-forming control principle, so it can automatically support the grid if the grid frequency limit is reached. In this case Grid Converter stops following the power reference and prevents a blackout in the grid.

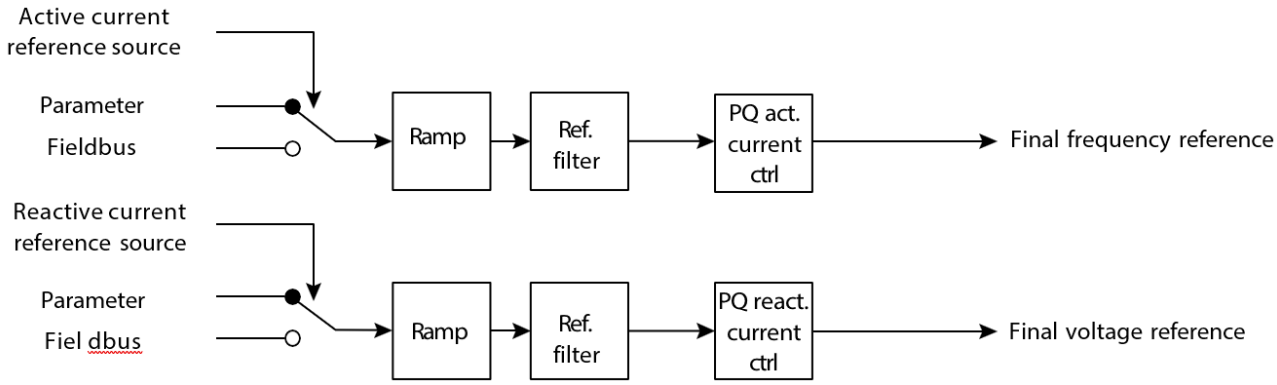

4.5. DC-link Voltage Control (AFE Control Mode)

In DC-link voltage control mode (AFE control mode), Grid Converter synchronizes to the grid voltage and uses direct control of active and reactive currents. Grid Converter regulates the DC-link voltage at the reference value by controlling the active current of the grid. The

DC-link voltage reference is specified as a percentage of system nominal DC-link voltage. DC-link voltage droop is used to ensure load sharing between parallel connected converters with individual control units. The reactive current controller follows the given reference.

The user-defined current limits are applied on the final current references. The dynamic behavior of the DC-link voltage controller and current controllers can be modified with parameters specified in percentages of internal default values.

4.6. AC Current and Power Control

In AC current and power control mode, the power and current control can be used in a similar way as it has been used in PQ mode, and all the parameters for the dynamic behavior apply in the same way as in PQ mode. The grid-following AC power control mode offers a faster dynamic response than the grid-forming mode.

4.7. DC Current and Power Control

In DC-link current and power control mode, the grid converter synchronizes to the grid voltage and uses the DC current or power reference to control active current or power. The DC-link current or power reference is given as percentage of the system nominal DC-link current or power.

The -defined current limits are applied to the final current references. The dynamic behavior of the DC-link current and power control can be modified in percentages of internal default values, set with parameters.

4.8. Mains Voltage Sensorless and Sensored Operation

Grid Converter can operate in all available control modes without the Mains Voltage Measurement OC7V0 option. In sensorless mode the voltage drop across the line filter and main transformer can be compensated by configuring the filter and transformer parameters. The extended Grid Converter features are available when the two-channel AC Mains Voltage Measurement OC7V0 option is used.

4.8.1. Line Filter Energization and Transformer Magnetization

Grid Converter can charge the filter capacitors, magnetize transformers, and synchronize to the voltage measured from the other side of the main circuit breaker. This way the inrush currents and voltage transients typically occurring after the breaker closes are effectively avoided.

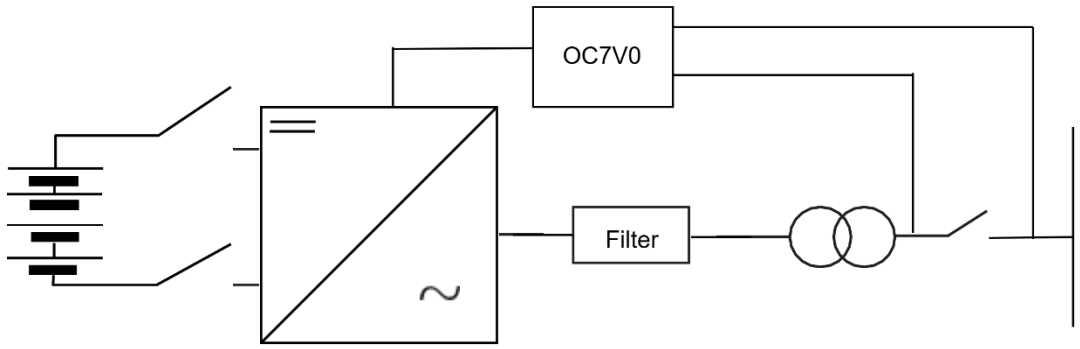

Figure 29: Line Filter Energization and Transformer Magnetization

4.8.2. Closed Loop AC Voltage Control

The Grid Converter control can be oriented to different network nodes by using the Mains Voltage Measurement OC7V0 option board.

For example, the voltage can be measured upstream of the line filter or the main transformer. The measurement point is configured in the application with a parameter. An auxiliary voltage measurement transformer can be used to step down the voltage to the input range of the option board OC7V0. This way the measurement can be taken from the medium voltage. The closed loop control

compensates for voltage losses across the transformer impedance, when the measurement is from the load side. Open loop transformer voltage drop compensation is available when the feedback is from the converter side.

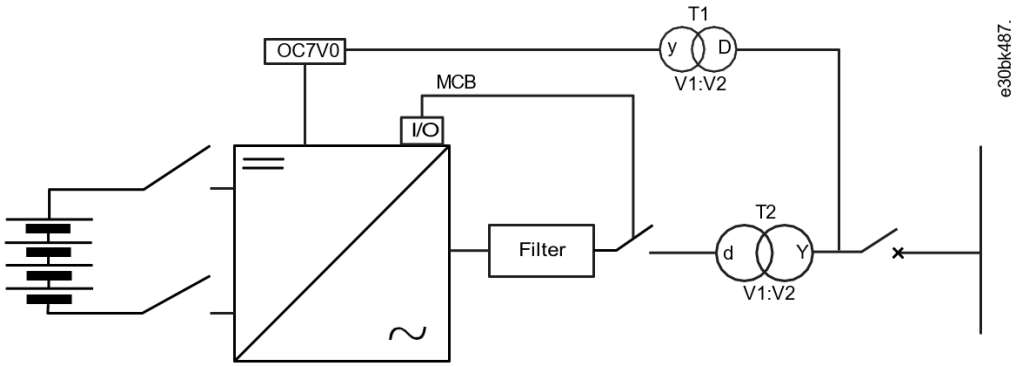

4.9. DC Current and Power Control

In DC-link current and power control mode, the grid converter synchronizes to the grid voltage and uses the DC current or power reference to control active current or power. The DC-link current or power reference is given as percentage of the system nominal DC-link current or power.

The user-defined current limits are applied to the final current references. The dynamic behavior of the DC-link current and power control can be modified in percentages of internal default values, set with parameters.

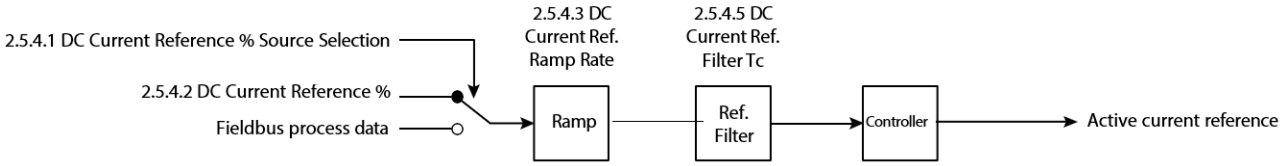

Figure 13: DC Current Control

4.10. DC-link Current Control

In DC-link current control mode, the converter synchronizes to the grid voltage and uses the DC current reference to control active current or power. The DC-link current reference is given as percentage of the nominal DC-link current.

The configurable current limits are applied to the final current references. DC-link current control mode also allows the user to define a droop curve where the DC-link current will droop based on the function of DC-link voltage. The droop curve is added to the DC-link current reference, which is set by using either parameter 2.5.4.2 DC Current Reference % or Fieldbus process data.

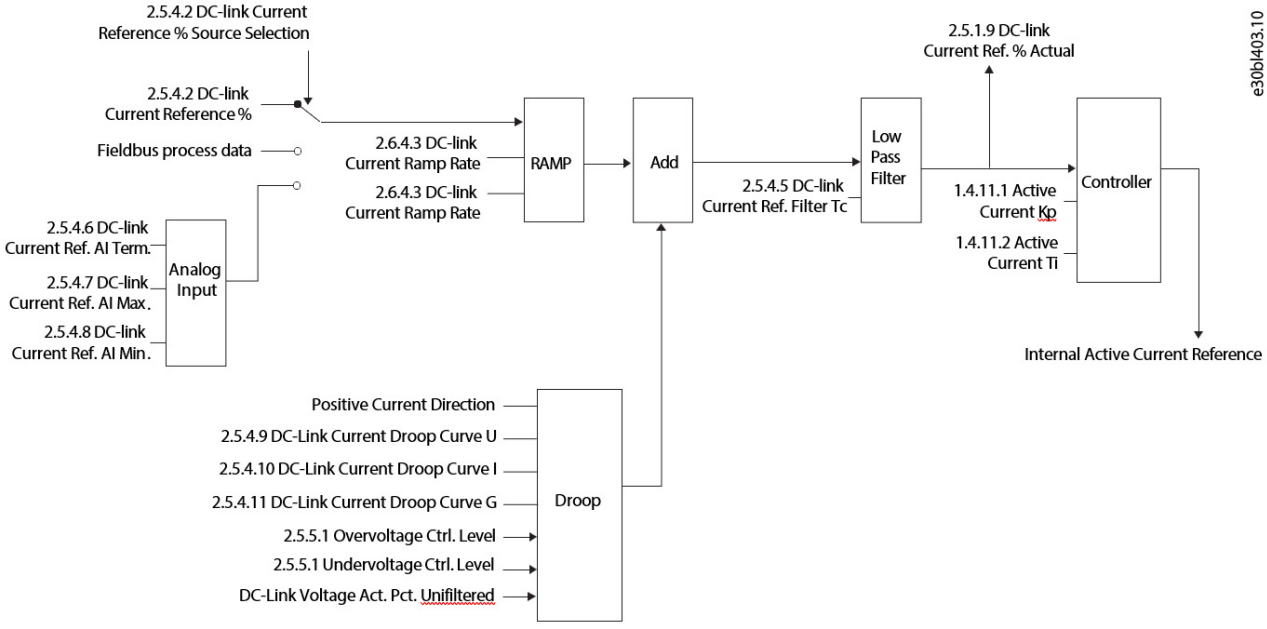

Figure 14: DC-link Current Control

DC-link current droop curve can be configured using the following parameters:

- 2.5.4.9 DC-link Current Droop Curve U
- 2.5.4.10 DC-link Current Droop Curve I
- 2.5.4.11 DC-link Current Droop Curve G

All the preceding parameters are arrays with 4 points each, that define the droop curve configuration. These 4 points have been defined as follows:

- U1, U2, U3, and U4 for DC-link Current Droop Curve U
- I1, I2, I3, and I4 for DC-link Current Droop Curve I
- G1, G2, G3, and G4 for DC-link Current Droop Curve G

The droop curve is bounded with parameters 2.5.1.4 Overvoltage Ctrl. Level and 2.5.1.6 Undervoltage Ctrl. Level. The output of the droop curve block in the following image is forced to 0 when the DC-link voltage goes outside the overvoltage and undervoltage limits that are set with these parameters.

To make a linear droop curve, the control points must be parameterized in the following way:

- G1=G2=G3=G4=G*
- I1=I2=-100%
- I3=I4=100%

For the DC-link voltage range, use the following points: U1= Undervoltage Ctrl. Level, U2=U3=100%, and U4= Overvoltage Ctrl. Level.

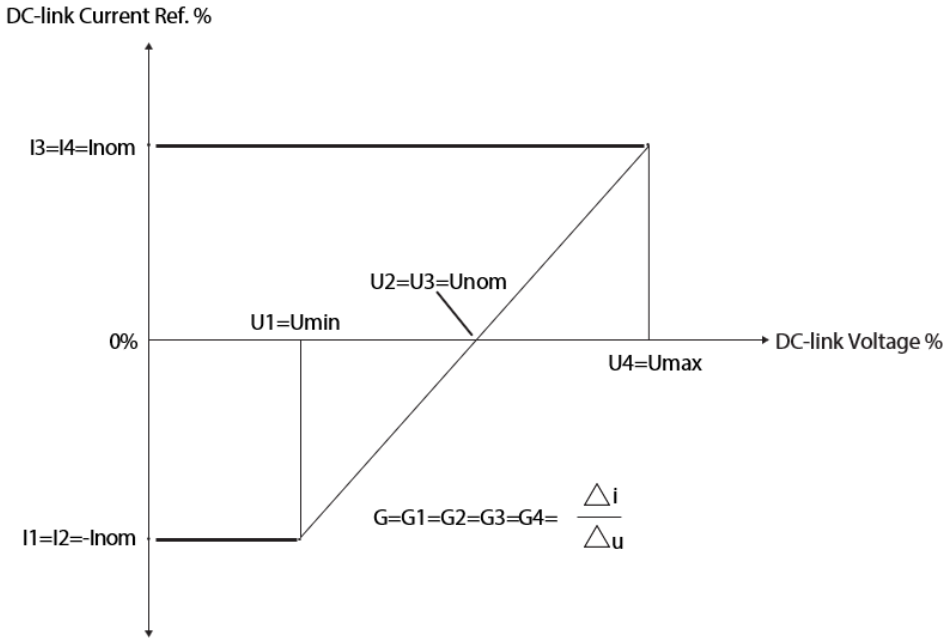

Figure 15: Current Droop Curve

For a more advanced droop curve, all the four array elements of the parameters correspond to the following table & figure:

Table 2: Droop Curve Configuration

Configuration point	Description	Unit	Range
I1	Maximum current in the negative direction	%	I1 ≤ I2
I2	Constant current in the negative direction after slope G1	%	I2 ≤ 0
I3	Constant current in the positive direction after slope G3	%	0 ≤ I3
I4	Maximum current in the positive direction	%	I3 ≤ I4
Umin	Minimum DC-link voltage	%	Umin ≤ U1
U1	Voltage corresponding to I2	%	U1 ≤ U2
U2	Minimum voltage for 0 current	%	U2 ≤ Unom
Unom	Nominal DC-link voltage	%	Unom ≤ U3
U3	Start voltage for slope G3	%	U3 ≤ U4
U4	Start voltage for slope G4	%	U4 ≤ Umax
Umax	Maximum DC-link voltage	%	Umax ≥ U1, U2, U3, U4, Unom, Umin

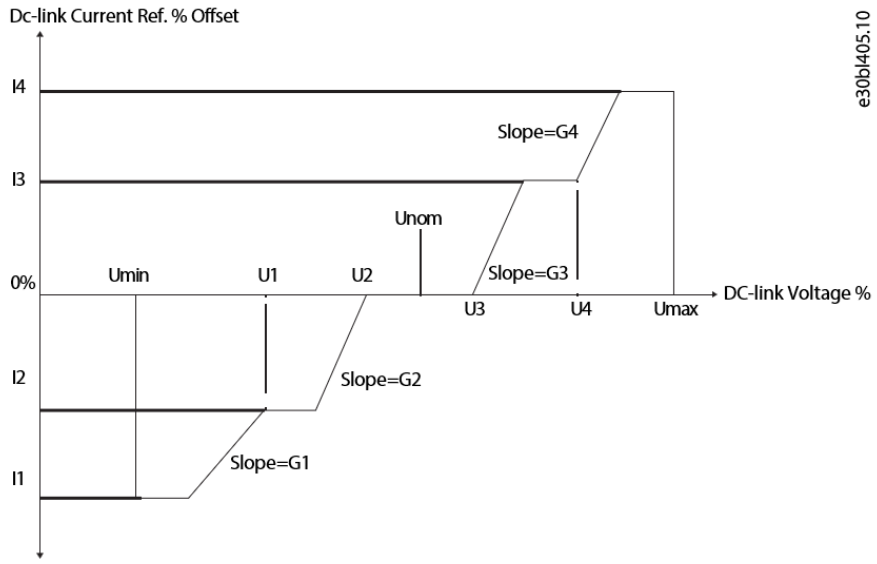

Figure 16: Advanced Droop Curve

4.11. Transformer-Interactive Control

A power transformer between Grid Converter and the load is used to step the voltage up or down, or to create galvanic isolation. In addition, the transformer eliminates DC current injection and can block the propagation of zero-sequence voltage (depends on vector group and grounding). When the transformer is loaded, it produces a voltage drop across the transformer impedance. In microgrid systems, it is beneficial to compensate for the voltage drop of the transformer to provide regulated voltage for the loads and consumers. Grid Converter provides both sensored and semi-sensorless methods for transformer compensation. The sensored compensation is based on taking the voltage measurement from the load side of the transformer. Closed loop control enables accurate compensation

of the voltage drop. The system supports the use of an auxiliary voltage measurement transformer in case the load side voltage is out of range of the Voltage Measurement OC7V0 option. The semi-sensorless method uses the transformer electrical data and the inverter measurements to compensate for the voltage drop. It is useful when the load side voltage measurement is not available.

The transformer-interactive control expects the user to parameterize Grid Converter per the electrical characteristics of the transformer. The converter (V1) and load (V2) winding voltages and their phase displacement are parameterized to account for the turns ratio and vector group. The phase displacement is defined in degrees, –180°...180° of the converter side voltage phase shift to the load side voltage. The leading phase difference has a positive sign and a lagging negative sign as per the clock face notation. The same convention applies to both the main and measurement transformer parameters. The electrical characteristics of the main transformer are configured per product label values for nominal apparent power (kVA), nominal frequency (Hz), short circuit impedance (%), and nominal load losses (kW). The electrical values are used by the transformer-interactive control to compensate for the voltage drop across the transformer impedance.

Figure 27 gives examples on the winding configurations and the phase differences. The phase difference is expressed as the phase shift of secondary winding (lowercase letter) to the primary winding (capital letter). For example, in the Dyn11 winding configuration, the secondary wye leads the primary delta by +30°. In the clock face notation, the primary-side line to neutral voltage of terminal A is oriented to 12 o'clock. The phase lead of the secondary is considered a counterclockwise voltage phasor rotation. Hence the 30° lead of the secondary wye results in the line to neutral a-terminal voltage pointing towards 11 o'clock.

The grid nominal voltage and current parameters define the transformer load side quantities when the transformer parameters are commissioned. Grid Converter adapts the converter side voltage to the transformer turns ratio to produce the requested voltage on the load side. All references and monitoring values are referenced to the load side (grid side) of the transformer.

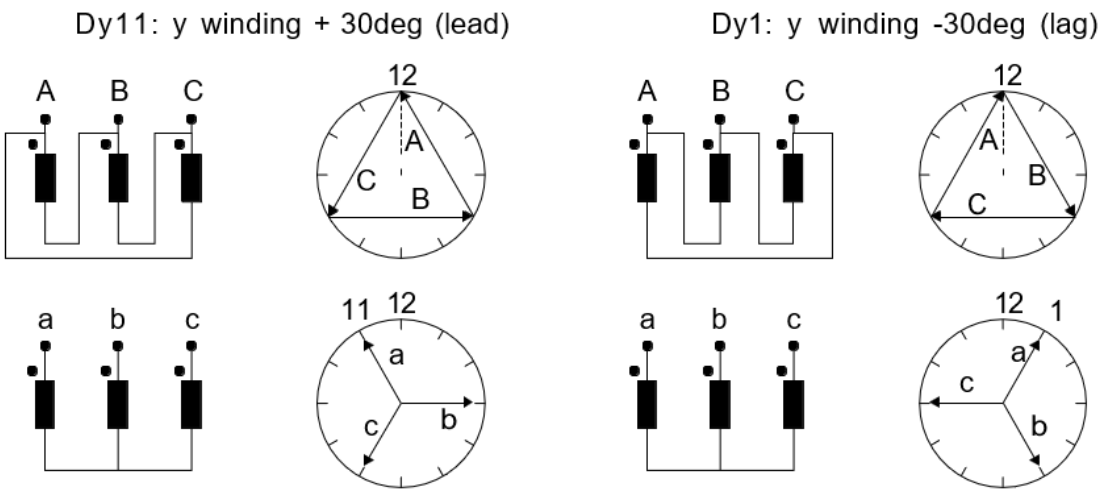

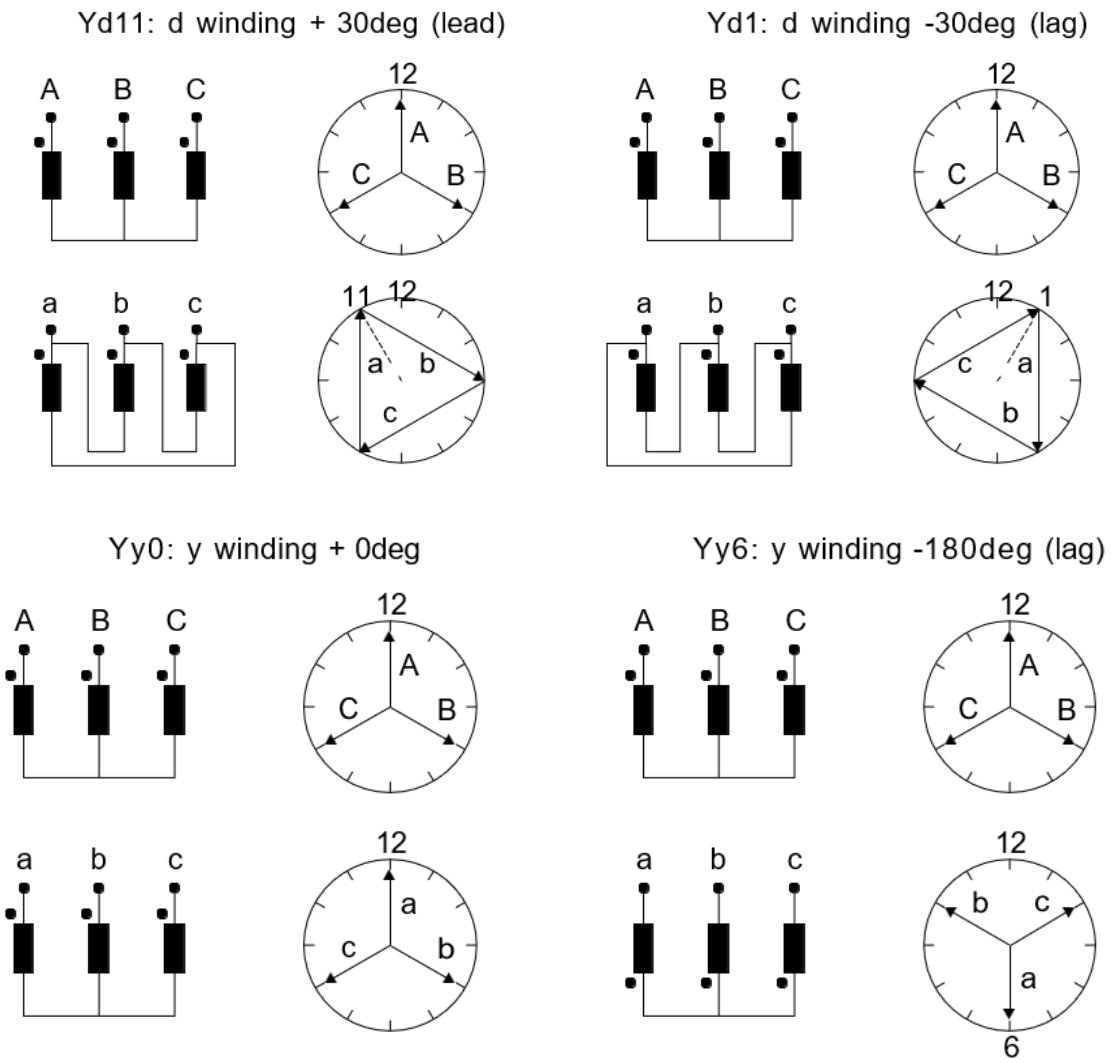

Figure 27: Examples of Transformer Vector Groups and the Phase Difference Between the Winding Voltages

Table 3: Transformer Winding Configuration and Phase Shift

Connection			Phase shift	Clock number
Yy0	Dd0	Dz0	0	0
Yd1	Dy1	Yz1	-30	1
	Dd2	Dz2	-60	2
	Dd4	Dz4	-120	4
Yd5	Dy5	Yz5	-150	5
Yy6	Dd6	Dz6	-180	6
Yd7	Dy7	Yz7	150	7
	Dd8	Dz8	120	8

	Dd10	Dz10	60	10
Yd11	Dy11	Yz11	30	11

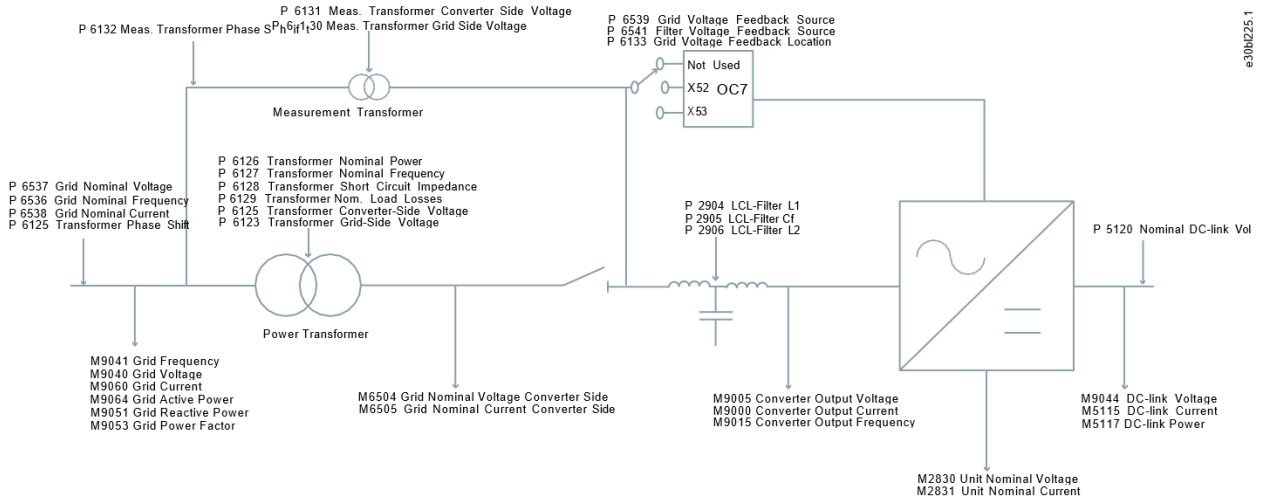

Figure 28: Transformer Interactive Control Schematic (the configuration is only valid for AR12L)

The transformer grid or converter side voltage refers to the turn ratio of the transformer (that is, the product label winding voltages) and not the actual voltages in the installation.

In Figure 28, the texts starting with P are parameters and the ones starting with M are monitoring values.

4.12. Black Start and Blackout Prevention

The black start capability is available in grid-forming control modes: island, droop, and droop with base load. If an unenergized network is detected when the converter is started, the converter ramps up the voltage from zero to the specified setpoint. This way the power system lines, transformers, and other equipment are energized in a controlled manner. The load pick-up capability depends on the sizing of the converter system.

The blackout prevention capability is available in droop control schemes which support operation in parallel with other grid-forming units. The converter can stay in operation to supply the loads if the other generating units are disconnected, for example in power systems on board ships.

5. Monitoring signals

Index
Index is the parameter location in the menu structure. It may change depending on application versions.

No.
Parameter number is the same, if the function of the parameter is the same. May have changes in range and selections depending on application versions.

Signal Name
The linguistic name of the parameter. Recommended to use together with parameter number to avoid confusion between similar linguistic names.

5.1. Monitoring signal tables

5.1.1. Basic monitoring

Index	No.	Signal Name	Unit	Type	Form	Description
1.1.1	9040	Grid Voltage	V	REAL	0,1	
1.1.2	9041	Grid Frequency	Hz	REAL	0,1	
1.1.3	9053	Grid Power Factor		REAL	0,01	
1.1.4	5115	DC-link Current	A	REAL	0,01	
1.1.5	9044	DC-link Voltage	V	REAL	0,1	
1.1.6	5117	DC-link Power	kW	REAL	1	
1.1.7	6201	Application Status Word 1		WORD	1	
1.1.8	6202	Application Status Word 2		WORD	1	
1.1.9	6203	Fault Status Word 1		WORD	1	
1.1.10	6204	Fault Status Word 2		WORD	1	
1.1.11	6205	Warning Status Word 1		WORD	1	
1.1.12	6206	Warning Status Word 2		WORD	1	
1.1.13	1610	Last Fault Number		UINT	1	
1.1.14	1609	Last Warning Number		UINT	1	
1.1.15	6540	Grid Control Status Word		WORD	1	
1.1.16	5096	Grid Control Ready Status Word		UINT	1	
1.1.17	6525	Application Ready Status Word				
1.1.18	9077	Limit Control Status Word		WORD	1	
1.1.19	5120	DC-link Nominal Current	A	REAL	0,01	
1.1.20	6505	Grid Nominal Current Converter-Side	A	REAL	0,01	
1.1.21	6504	Grid Nominal Voltage Converter-Side	V	REAL	0,01	
1.1.22	5119	Grid Nominal Power	kVA	REAL	0,01	
1.1.23	6594	Ext. Grid Status Word		WORD	1	
1.1.24	6238	General Status Word 01		UDINT	1	
1.1.25	333	Standby Mode Status Word		WORD	1	
1.1.26	162	DC Contactor Status Word		WORD	1	

5.1.2. Control mode and reference monitoring

Index	No.	Signal Name	Unit	Type	Form	Description
1.2.1	170	Active Operation Mode		UINT	1	
1.2.2	9078	Grid Control Mode Selection Status Word		WORD	1	
1.2.3	1718	Frequency Ref.	Hz	REAL	0,01	
1.2.4	6530	Voltage Ref.	%	REAL	0,01	
1.2.5	2874	Active Current Ref.	%	REAL	0,1	
1.2.6	2875	Reactive Current Ref. Act.	%	REAL	0,1	
1.2.7	2876	Active Power Ref.	%	REAL	0,1	
1.2.8	2877	Reactive Power Ref.	%	REAL	0,1	
1.2.9	6141	DC-link Current Ref. Actual	%	REAL	0,01	
1.2.10	6543	DC-link Voltage Ref. Actual	%	REAL	0,01	
1.2.11	7693	DC-link Power Ref. Actual	%	REAL	0,01	

5.1.3. Limit monitoring

Index	No.	Signal Name	Unit	Type	Form	Description
1.3.1	9077	Limit Control Status Word		WORD	1	
1.3.2	2882	Current Limit (Actl.)	%	REAL	0,1	
1.3.3	2878	Neg. Active Current Limit (Actl.)	%	REAL	0,1	
1.3.4	2880	Pos. Active Current Limit (Actl.)	%	REAL	0,1	
1.3.5	136	Neg. Reactive Current Limit (Actl.)	%	REAL	0,1	
1.3.6	137	Pos. Reactive Current Limit (Actl.)	%	REAL	0,1	
1.3.7	2879	Neg. Active Power Limit (Actl.)	%	REAL	0,1	
1.3.8	2881	Pos. Active Power Limit (Actl.)	%	REAL	0,1	
1.3.9	6544	Overvoltage Control Limit	V	REAL	0,01	
1.3.10	6546	Undervoltage Control Limit	V	REAL	0,01	

5.1.4. Start and Stop monitoring.

Index	No.	Signal Name	Unit	Type	Form	Description
1.4.1	6561	Pre-Charge Active		INT	1	
1.4.2	6562	Pre-Charge Ready		INT	1	
1.4.3	171	MCB Close Active		INT	1	
1.4.4	172	MCB Feedback		INT	1	

5.1.5. Control place monitoring

Index	No.	Signal Name	Unit	Type	Form	Description
1.5.1	113	Active Control Place		UINT	1	
1.5.2	116	FB Forcing Requested		BOOL	1	
1.5.3	117	I/O Forcing Requested		BOOL	1	
1.5.4	124	Local Control Forcing Requested		BOOL	1	

5.1.6. Converter output monitoring

Index	No.	Signal Name	Unit	Type	Form	Description
1.6.1	9000	Converter Output Current	A	REAL	0,01	
1.6.2	9001	Converter Output Current %	%	REAL	0,01	
1.6.3	9005	Converter Output Voltage	V	REAL	0,01	
1.6.4	9015	Converter Output Frequency	Hz	REAL	0,01	

5.1.7. Grid Monitoring

Index	No.	Signal Name	Unit	Type	Form	Description
1.7.1	9041	Grid Frequency	Hz	REAL	0,1	
1.7.2	9040	Grid Voltage	V	REAL	0,1	
1.7.3	9047	Grid Voltage Imbalance	%	REAL	0,01	
1.7.4	9060	Grid Current	A	REAL	0,1	
1.7.5	9061	Grid Current %	%	REAL	0,1	
1.7.6	9062	Grid Active Current %	%	REAL	0,1	
1.7.7	9063	Grid Reactive Current %	%	REAL	0,1	
1.7.8	9064	Grid Active Power	kW	REAL	0,1	
1.7.9	9065	Grid Active Power %	%	REAL	0,1	
1.7.10	9051	Grid Reactive Power	kVA	REAL	0,1	
1.7.11	9052	Grid Reactive Power %	%	REAL	0,1	
1.7.12	9053	Grid Power Factor		REAL	0,01	
1.7.13	9048	L1-L2 Line Voltage (RMS)	V	REAL	0,01	
1.7.14	9049	L2-L3 Line Voltage (RMS)	V	REAL	0,01	
1.7.15	9050	L3-L1 Line Voltage (RMS)	V	REAL	0,01	

5.1.8. DC-Link Monitoring

Index	No.	Signal Name	Unit	Type	Form	Description
1.8.1	9044	DC-link Voltage	V	REAL	0,1	
1.8.2	6542	DC-link Voltage %	%	REAL	0,01	
1.8.3	5115	DC-link Current	A	REAL	0,01	
1.8.4	5116	DC-link Current %	%	REAL	0,01	
1.8.5	5117	DC-link Power	kW	REAL	1	
1.8.6	5118	DC-link Power %	%	REAL	0,01	

5.1.9. Converter Control Monitoring

Index	No.	Signal Name	Unit	Type	Form	Description
1.9.1	2923	Actual Switching Frequency	Hz	REAL	0,01	
1.9.2	5101	Modulation Index		REAL	0,01	
1.9.3	2952	Control Unit Temperature	°C	REAL	0,01	

5.1.10. Protection monitoring

5.1.10.1. Measured Temp. Protection Status

Index	No.	Signal Name	Unit	Type	Form	Description
1.10.1.1	5200	Protection 1 Temp.	°C	REAL	0,01	
1.10.1.2	5201	Protection 2 Temp.	°C	REAL	0,01	
1.10.1.3	5202	Protection 3 Temp.	°C	REAL	0,01	
1.10.1.4	5203	Protection 4 Temp.	°C	REAL	0,01	
1.10.1.5	5204	Protection 5 Temp.	°C	REAL	0,01	
1.10.1.6	5205	Protection 6 Temp.	°C	REAL	0,01	
1.10.1.7	5273	Protection 7 Temp.	°C	REAL	0,01	
1.10.1.8	5274	Protection 8 Temp.	°C	REAL	0,01	
1.10.1.9	5275	Protection 9 Temp.	°C	REAL	0,01	
1.10.1.10	5276	Protection 10 Temp.	°C	REAL	0,01	
1.10.1.11	131	External Ambient Temperature	°C	REAL	0,1	

5.1.10.2. Supervision monitoring

Index	No.	Signal Name	Unit	Type	Form	Description
1.10.2.1	9054	Grid Supervision Status Word		WORD	1	

5.1.11. Custom Status Word monitoring

Index	No.	Signal Name	Unit	Type	Form	Description
1.11.1	2410	Custom Status Word		WORD	1	

5.1.12. Power unit monitoring

Index	No.	Signal Name	Unit	Type	Form	Description
1.12.1	2836	Power Capacity			1	
1.12.2	2830	Unit Nominal Voltage	V	REAL	0,01	
1.12.3	2831	Unit Nominal Current	A	REAL	0,01	
1.12.4	2950	Heat Sink Temperature	°C	REAL	0,01	

5.1.13. Cooling Fan monitoring

Index	No.	Signal Name	Unit	Type	Form	Description
1.13.1	2931	Main Fan Speed	rpm	INT	1	
1.13.2	2926	Internal Fan Speed	rpm	INT	1	

5.1.14. Fieldbus process data monitoring

Index	No.	Signal Name	Unit	Type	Form	Description
1.14.1	1335	Fieldbus Control Word		WORD	1	
1.14.2	1307	Fieldbus Status Word		WORD	1	
1.14.3	1500	FB Microgrid Control Word		WORD	1	
1.14.4	6533	FB DC-link Voltage Ref.	%	REAL	0,01	
1.14.5	4512	FB Overvoltage Limit	%	REAL	0,01	
1.14.6	4510	FB Undervoltage Limit	%	REAL	0,01	
1.14.7	1501	FB Active Current Ref.	%	REAL	0,01	
1.14.8	1502	FB Reactive Current Ref.	%	REAL	0,01	
1.14.9	1504	FB Active Power Ref.	%	REAL	0,01	
1.14.10	1505	FB Reactive Power Ref.	%	REAL	0,01	
1.14.11	1506	FB Freq. Ref.	Hz	REAL	0,01	
1.14.12	1508	FB Voltage Ref.	%	REAL	0,01	
1.14.13	1509	FB Active Current Limit Neg.	%	REAL	0,01	
1.14.14	1510	FB Active Current Limit Pos.	%	REAL	0,01	
1.14.15	1511	FB Output Current Limit	%	REAL	0,01	
1.14.16	1512	FB Active Power Limit Neg.	%	REAL	0,01	
1.14.17	1513	FB Active Power Limit Pos.	%	REAL	0,01	
1.14.18	7690	FB DC-link Power Ref.	%	REAL	0,01	
1.14.19	6139	FB DC-link Current Ref.	%	REAL	0,01	
1.14.20	4976	FB DC-link Current Neg.Direction Limit	%	REAL	0,01	
1.14.21	4977	FB DC-link Current Pos.Direction Limit	%	REAL	0,01	

5.1.15. Grid Code monitoring

Index	No.	Signal Name	Unit	Type	Form	Description
1.15.1	5558	Power Factor Reference		REAL	0,0001	
1.15.2	5559	Power Factor Reactive Reference	%	REAL	0,01	
1.15.3	5572	Grid Code State		DINT	1	
1.15.4	5626	Grid Voltage Scaled	%	REAL	0,01	
1.15.5	5627	Grid Frequency Scaled		REAL	0,01	
1.15.6	6239	DataLoggerAppTrigger		UINT	1	
1.15.7	5716	Grid Voltage Scaled High Filt	%	REAL	0,01	

5.2. Monitoring signal descriptions

5.2.1. Basic monitoring

1.1.1 9040 Grid Voltage V

Shows grid line-to-line voltage (RMS) at point of common coupling. Estimated/calculated value when grid voltage feedback is not in use.

1.1.2 9041 Grid Frequency Hz

Shows the actual grid frequency.

1.1.3 9053 Grid Power Factor

Shows the grid power factor. Sign conversion is selected with P2.8.2.11 Power Factor Sign Mode (5098) between ICE convention and IEEE conventions, Grid Converter with Grid Code application uses default as IEEE convention.

Current/Power Positive Direction: From DC-Link to Grid

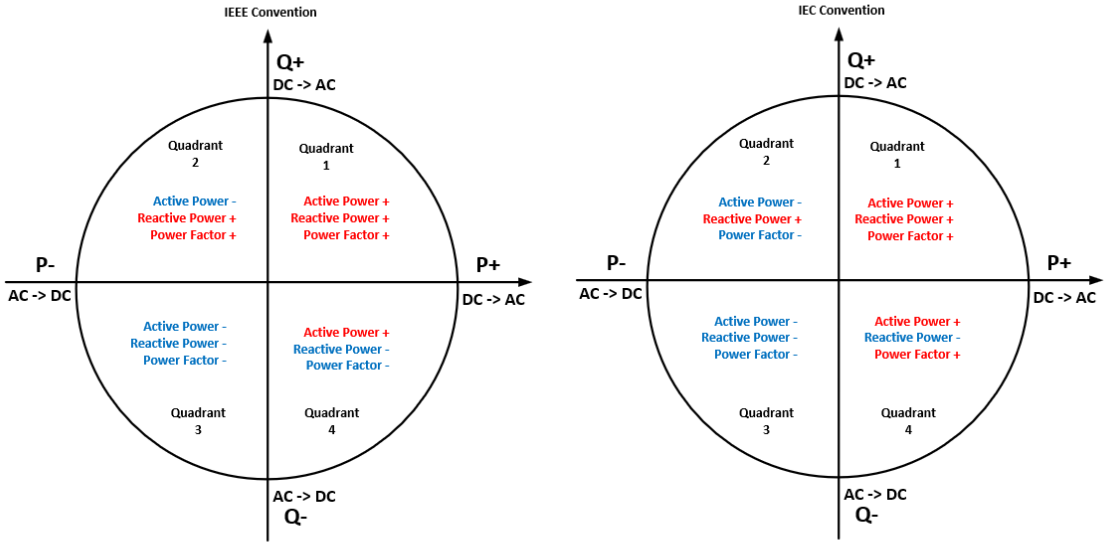

Current/Power Positive Direction: From Grid to DC-link

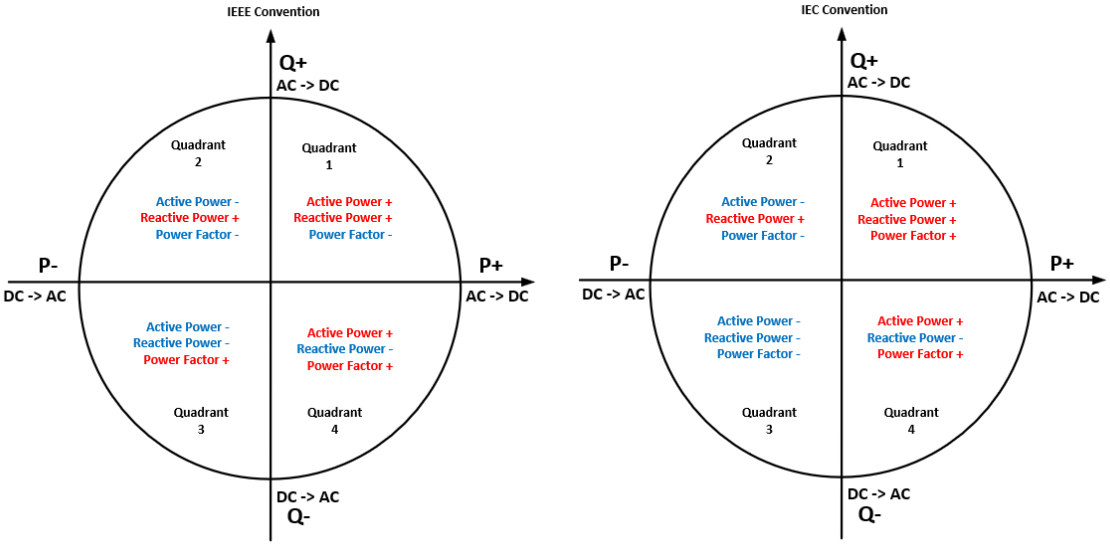

1.1.4 5115 DC-link Current A

Shows the actual DC-link current.

1.1.5 9044 DC-link Voltage V

Shows the actual DC-link voltage.

1.1.6 5117 DC-link Power kW

Shows the actual DC-link power.

1.1.7 6201 Application Status Word 1

	Application Status Word 1 ID6201	
	Signal	Description
b0	Ready to Run	0: The converter is not ready to start modulation. Check 'Grid Control Ready Status Word' and 'Application Ready Status Word'. 1: The converter is ready to start modulation
b1	Run	0: The unit is not running (modulating) 1: The unit is running (modulating)
b2	Info active (static)	Static status signal for info events. 0: One or more info level events are active 1: No info level events active.
b3	Warning (static)	Static status signal for warning events. 0: No warning level events active. 1: One or more warning level events are active.
b4	Fault (static)	Static status signal for fault events. 0: No fault level events active. 1: One or more fault level events are active.
b5	PC control	0: PC (MyDrive® Insight) is not the active control place 1: PC (MyDrive® Insight) is the active control place.
b6	Panel control	0: Panel control is not the active control place 1: Panel control is the active control place.
b7	I/O control	0: I/O control is not the active control place 1: I/O control is the active control place.
b8	Fieldbus control	0: FB control is not the active control place 1: FB control is the active control place.
b9	Reserved	
b10	Reserved	
b11	Run enable	0: The Run Enable Input is not active. Start is prohibited. 1: The Run Enable Input is active allowing the converter to start or maintain running.
b12	Start command	0: No start request is active from the active control place. 1: The start request is active from the active control place.
b13	Quick stop	0: No quick stop is active from I/O or fieldbus. 1: The quick stop has been activated from I/O or fieldbus.
b14	Reserved	
b15	BCU Breaking Active	

1.1.8 6202 Application Status Word 2

	Application Status Word 2 ID6202	
	Signal	Description
b0	Info active (toggled)	Toggled status signal for info events. This signal will toggle down for 1 second, whenever a new info event is activated while another info event was already active.
b1	Warning active (toggled)	Toggled status signal for warning events. This signal will toggle down for 1 second, whenever a new warning is activated while another warning was already active.
b2	Fault active (toggled)	Toggled status signal for fault events. This signal will toggle down for 1 second, whenever a new fault is activated while another fault was already active.
b3	Ready to Start Pre-Charge	Pre-Charge allowed active is a status signal indicating that the DC-link voltage is below the Pre-Charge Allowed Level (No. 5510) and a new start command or Pre-Charge command can successfully start the Pre-charging. 1: Pre-charging is allowed. 0: No Pre-charging is allowed.
b4	Ready to Close MCB	Ready to Close MCB is a status signal indicating that the DC-link voltage has reached above the Pre-Charge Ready Level (No. 6566) and all the interlocks to close the breaker are active. 1: MCB closing is allowed. 0: MCB closing is not allowed.
b5	Pre-Charge Detected	Pre-Charged Detected is a status signal indicating that the DC-link voltage is increasing from 0% towards Pre-Charge Ready Level. 1: Pre-Charge is detected. 0: Pre-Charge is not detected.
b6	Pre-Charge Output	Pre-Charge Output is a status signal indicating that the Pre-Charge relay output is active. 1: Pre-Charge relay output is active. 0: Pre-Charge relay output is not active.
b7	MCB Close Command	MCB Close Command is a status signal indicating that the MCB closing relay output is active. 1: MCB closing relay output is active. 0: MCB closing relay output is not active.
b8	MCB Feedback	MCB Feedback is a status signal indicating that the MCB is closed if configured and controlled by the application. 1: MCB is closed. 0: MCB is open.
b9	Switch Off Request	Switch Off Request is a status signal indicating that the Switch On Enable Input (No. 4728) is false or the Switch On Enable bit (B0) from the fieldbus is false. 1: Switch off requests from I/O or Fieldbus is active or stop with MCB open requested from control panel or MyDrive Insight. 0: No switch off request from I/O or Fieldbus is active
b10	Pre-Charge Ready	Pre-Charge Ready is a status signal indicating that DC-link voltage is above the Pre-Charge Ready Level (No. 6566). 1: Pre-charging is ready. 0: Pre-charging is not ready.
b11	MCB Close Enabled	MCB Close Enabled is a status signal indicating that the MCB closing is enabled from both MCB Close Enable Input (6557) and MCB Close Enable bit from the fieldbus. 1: MCB closing is enabled. 0: MCB closing is not enabled.
b12	Ready to Switch On	Ready to Switch On is a status signal indicating that all the application interlocks needed to start the converter are active. 1: Converter is ready to switch on.

		0: Converter is not ready to switch on. One of the following interlocks are missing: - Switch On Enable (either from I/O or fieldbus). - MCB close enable (either from I/O or fieldbus). - No Quick stop is active. - No fault is active.
b13	Filter Energized	Filter Energized is a status signal indicating that the LCL-filter is energized. 1: Filter is energized. 0: Filter is not energized.
b14	Reserved	
b15	Reserved	

1.1.9 6203 Fault Status Word 1

	Fault Status Word 1 ID6203	
	Signal	Description
b0	Over current	Rectifier overcurrent, DC-link capacitor overcurrent, output overcurrent or output short circuit has occurred.
b1	DC-Link Over voltage	DC-link voltage is above normal operating range.
b2	DC-Link Under voltage	DC-link voltage is below normal operating range.
b3	Reserved	-
b4	Unit Over temperature	4103, 4104. IGBT temperature above normal operating range.
b5	Reserved	-
b6	Reserved	-
b7	Reserved	-
b8	Earth Fault	High-impedance earth leakage current on the inverter terminals.
b9	Reserved	-
b10	Fieldbus issue	Fieldbus process data timeout, watchdog, loss of fieldbus I/O or connection has occurred.
b11	HMI control lost	While in control of the converter, Control Panel or PC tool connection has been lost.
b12	Reserved	-
b13	Thermistor Fault	One or more thermistor protection functions is active.
b14	Auxiliary device	One or more aux-bus connected power component temperatures is above normal operating range.
b15	Reserved	-

1.1.10 6204 Fault Status Word 2

	Fault Status Word 2 ID6204	
	Signal	Description
b0	Analog Input Live Zero	One of the analog inputs live zero fault is active. 0: No live zero fault is active 1: One or more of the analog inputs live zero faults are active
b1	Pre charge Failed	Pre-charging has failed. 0: No fault corresponding to the Pre-charging failure is active 1: Pre-charging failure fault is active
b2	MCB Feedback Fault	MCB feedback fault is active because of the feedback missing. 0: No MCB feedback fault is active 1: MCB feedback fault is active
b3	Quick Stop Active	0: No quick stop fault is active 1: One or more of the quick stop faults are active
b4	Thermistor Over Temperature	0: No thermistor over temperature faults is active 1: One or more of the thermistors over temperature faults are active
b5	MCB Trip	0: No MCB trip fault is active 1: MCB trip input from breaker has triggered the MCB trip fault.
b6	External Fault	0: None of the External Event faults are active 1: One or more of the External Event faults are active
b7	Cooling Supervision Fault	0: No cooling supervision faults is active 1: Cooling supervision fault is active
b8	Fieldbus Watchdog	0: Fieldbus watchdog fault is not active. 1: Fieldbus watchdog fault is active.
b9	Line Synchronization Fault	0: Line synchronization fault is not active 1: Line synchronization fault active
b10	Short Term Current Injection	0: Short term current injection fault is not active. 1: Short term current injection fault is active
b11	DC Power Breaker Timeout	0: None of the listed faults is active 1: One or more of the listed faults are active Fault list: event no. 5379
b12	Reserved	
b13	Reserved	
b14	Reserved	
b15	Reserved	

1.1.11 6205 Warning Status Word 1

	Warning Status Word 1 ID6205	
	Signal	Description
b0	Over current	Rectifier overcurrent, DC-link capacitor overcurrent, output overcurrent or output short circuit has occurred.
b1	DC-Link Over voltage	DC-link voltage is above normal operating range.
b2	DC-Link Under voltage	DC-link voltage is below normal operating range.
b3	Reserved	-
b4	Unit Over temperature	4103, 4104. IGBT temperature above normal operating range.
b5	Reserved	-
b6	Reserved	-
b7	Reserved	-
b8	Earth Warning	High-impedance earth leakage current on the inverter terminals.
b9	Reserved	-
b10	Fieldbus issue	Fieldbus process data timeout, watchdog, loss of fieldbus I/O or connection has occurred.
b11	HMI control lost	While in control of the converter, Control Panel or PC tool connection has been lost.
b12	Optional Node Disconnected	4632, Internal communication route to one or more optional nodes have been disconnected
b13	Thermistor Warning	One or more thermistor protection functions is active.
b14	Auxiliary device	One or more aux-bus connected power component temperatures is above normal operating range.
b15	Reserved	-

1.1.12 6206 Warning Status Word 2

	Warning Status Word 2 ID6206	
	Signal	Description
b0	Analog Input Live Zero	One of the analog inputs live zero warning is active. 0: No live zero warning is active 1: One or more of the analog inputs live zero faults are active
b1	Reserved	-
b2	Reserved	-
b3	Quick Stop Active	0: No quick stop warning is active 1: One or more of the quick stop warnings are active
b4	Thermistor Over Temperature	0: No thermistor over temperature Warning is active 1: One or more of the thermistors over temperature warnings are active
b5	Reserved	-
b6	External Warning	0: None of the External Event warnings are active 1: One or more of the External Event warnings are active
b7	Cooling Supervision Warning	0: No cooling supervision warning is active 1: Cooling supervision warning is active
b8	Fieldbus Watchdog	0: Fieldbus watchdog warning is not active. 1: Fieldbus watchdog warnings is active.
b9	Line Synchronization	4166 LinePllLock, 4160 MissingLine, 4161 LineFrequency
b10	Short Term Current Injection	0: Short term current injection warning is not active. 1: Short term current injection warning is active
b11	AC Surge Protection Active	0: None of the listed warnings is active 1: One or more of the listed warnings are active Warning list: event no. 21569
b12	DC Surge Protection Active	0: None of the listed warnings is active 1: One or more of the listed warnings are active Warning list: event no. 21568
b13	Reserved	
b14	Reserved	
b15	Reserved	

1.1.13 1610 Last Fault Number

Shows the number of the most recent active fault.

1.1.14 1609 Last Warning Number

Shows the number of the most recent active warning.

1.1.15 6540 Grid Control Status Word

	Grid Control Status Word ID6540	
	Signal	Description
b0	Converter Control Ready	0: Grid Converter control is not ready. See Grid Control Ready Status Word (No. 5096) 1: Grid Converter control is ready to modulate.
b1	Running	0: Grid Converter is not running. 1: Grid Converter is running.
b2	Reserved	-
b3	Fault Active	0: No fault is active 1: One or more of the quick stop warnings are active
b4	Reserved	-
b5	Reserved	-
b6	DC-link Charged	0: DC-link is not charged. 1: DC-link is charged.
b7	LCL-Filter Energization Ready	0: Filter is not energized. 1: Filter is energized.
b8	Reserved	-
b9	Reserved	-
b10	Reserved	-
b11	Reserved	-
b12	Reserved	-
b13	Reserved	-
b14	Reserved	-
b15	Reserved	-

1.1.16 5096 Grid Control Ready Status Word

	Grid Control Ready Status Word ID5096	
	Signal	Description
b0	Run Enabled	0: Run Enable is missing 1: Run Enable is active
b1	Fault Active	0: One or multiple faults are active 1: No fault is active
b2	Pre-Charge Done	0: Pre-charging is not completed 1: Pre-charging is completed
b3	DC-link voltage within operating range	0: DC-link voltage is not within the under & over-voltage fault limits 1: DC-link voltage is within the under & over-voltage fault limits
b4	Power unit ready	0: Power unit is not ready 1: Power unit is ready
b5	Successful phase sync.	0: Error in grid voltage phase locked loop 1: No error in grid voltage phase locked loop
b6	Frequency supervision	0: Grid frequency is not within the instantaneous trip limits 1: Grid frequency is within the instantaneous trip limits
b7	Grid voltage supervision	0: Grid voltage is not within the instantaneous trip limits 1: Grid voltage is within the instantaneous trip limits
b8	Correct voltage measurement option wiring	0: Phase order of the converter terminal voltage and voltage measurement option is different 1: Phase order of the converter terminal voltage and voltage measurement option is same
b9	Valid LCL filter values	0: LCL filter data is not correct 1: LCL filter data is correct
b10	Valid Configuration	0: DC-link under & over-voltage limits are very close to each other. 1: DC-link under & over-voltage limits are wide enough for operation.
b11	Reserved	-
b12	Reserved	-
b13	EV measurement is ready	0: External voltage measurement is not ready for closed-loop control 1: External voltage measurement is ready for closed-loop control
b14	Reserved	-
b15	Reserved	-

1.1.17 6525 Application Ready Status Word

	Application Ready Status Word ID6525	
	Signal	Description
b0	Switch On Enabled	1: Switch on enable from I/O & fieldbus is active. 0: Switch on enable is missing or stop with MCB open requested from control panel or MyDrive Insight
b1	MCB Close Enabled	1: MCB close enable present 0: MCB close enable missing *Not used in DC/DC Converter Application.*
b2	MCB Ready	1: MCB closed or anyway not preventing modulation 0: Modulation prevented due the MCB not being closed *Not used in DC/DC Converter Application.*
b3	Quick Stop Inverse	1: Quick Stop not active 0: Quick Stop active
b4	Reserved	-
b5	Reserved	-
b6	Reserved	-
b7	Reserved	-
b8	Reserved	-
b9	Reserved	-
b10	Reserved	-
b11	Reserved	-
b12	Reserved	-
b13	Reserved	-
b14	Reserved	-
b15	Reserved	-

1.1.18 9077 Limit Control Status Word

	Limit Control Status Word ID9077	
	Signal	Description
b0	Pos. Active Current Limit	0: Positive Active Current Limiter not active (not limiting) 1: Positive Active Current Limiter active (limiting)
b1	Neg. Active Current Limit	0: Negative Active Current Limiter not active (not limiting) 1: Negative Active Current Limiter active (limiting)
b2	Short Term Current Injection Limit	0: Short Term Current Injection Limiter not active (not limitng) 1: Short Term Current Injection Limiter active (limiting)
b3	Reserved	
b4	DC-link Overvoltage control	0: DC-link overvoltage controller is not active (not regualting) 1: DC-link overvoltage controller is active (regualting)
b5	DC-link Undervoltage control	0: DC-link undervoltage controller is not active (not regualting) 1: DC-link undervoltage controller is active (regualting)
b6	Pos. Active Power Limit	0: Pos. Active Power Limiter is not active (not limiting) 1: Pos. Active Power Limiter is active (limiting)
b7	Neg. Active Power Limit	0: Neg. Active Power Limiter is not active (not limiting) 1: Neg. Active Power Limiter is active (limiting)
b8	Pos. Reactive Current Limit	0: Pos. Reactive Current Limiter is not active (not limiting) 1: Pos. Reactive Current Limiter is active (limiting)
b9	Neg. Reactive Current Limit	0: Neg. Reactive Current Limiter is not active (not limiting) 1: Neg. Reactive Current Limiter is active (limiting)
b10	Reserved	
b11	Reserved	
b12	Reserved	
b13	Reserved	
b14	Reserved	
b15	Reserved	

1.1.19 5120 DC-link Nominal Current A

Shows the DC-link nominal current. The readout is calculated based on other nominal parameters:

$$DC-link\ Nominal\ Current = sqrt(3) * \frac{Grid\ Nominal\ Voltage * Grid\ Nominal\ Current}{DC-link\ Nominal\ Voltage}$$

1.1.20 6505 Grid Nominal Current Converter-Side A

Shows Grid nominal current reduced to the converter side of the main transformer.

1.1.21 6504 Grid Nominal Voltage Converter-Side V

Shows grid nominal voltage reduced to the converter side of the main transformer.

1.1.22 5119 Grid Nominal Power kVA

Shows the grid nominal power. The readout is calculated based on nominal parameters.

Grid Nominal Power=sqrt(3)*Grid Nominal Voltage*Grid Nominal Current

1.1.23 6594 Ext. Grid Status Word

	Ext. Grid Status Word ID6594	
	Signal	Description
b0	Grid Detected	1: Grid voltage feedback is available 0: No Grid voltage feedback is available
b1	Phase Locked Loop operation (PLL)	1: Phase locked loop is running
b2	Synchronization in progress	1: Synchronization is ongoing 0: No Synchronization is ongoing
b3	Voltage Synched	1: Voltage synchronization is ready
b4	Angle Synched	1: Phase angles synchronization is ready
b5	Phase Locked Loop Synched (PLL)	1: Phase locked loop is synched
b6	Frequency in range	1: Grid frequency is within the instant fault limits 0: Grid frequency is outside the instant fault limits
b7	Voltage in range	1: Grid voltage is within the instant fault limits 0: Grid voltage is outside the instant fault limits
b8	Reserved	
b9	Reserved	
b10	Reserved	
b11	Reserved	
b12	Reserved	
b13	Reserved	
b14	Reserved	
b15	Reserved	

1.1.24 6238 General Status Word 01

Status Word for Datalogger purposes. 32-bit DWORD that is updated at 1 ms intervals.

Signal names are as variable names in the code for enabling Boolean signal monitoring.

	General Status Word 01 ID6238	
	Signal	Description
b0		
b1	Control_Ready	0: The converter is not ready to start modulation. 1: The converter is ready to start modulation
b2	Control_Run	0: The unit is not running (modulating) 1: The unit is running (modulating)
b3	Control_Fault	0: No fault level events active. 1: One or more fault level events are active.
b4	StartActive	0: No start request is active from the active control place. 1: The start request is active from the active control place.
b5	QuickStopActive	0: No quick stop is active from I/O or fieldbus. 1: The quick stop has been activated from I/O or fieldbus.
b6	(FW_)RunEnable	0: The Run Enable Input is not active. Start is prohibited. 1: The Run Enable Input is active allowing the converter to start or maintain running.
b7	Control_Warning	0: No warning level events active. 1: One or more warning level events are active.
b8	Control_PreChargeReady	1: Pre-charging is ready. 0: Pre-charging is not ready.
b9	McbCloseActive	1: MCB closing request is active. 0: MCB closing request is not active.
b10	McbFeedback	1: MCB is closed. 0: MCB is open.
b11		
b12	(FW_)RunRequest	0: No start request is active to firmware. 1: The start request is active to firmware.
b13		
b14		
b15		
b16		
b17		
b18		
b19		
b20		
b21		
b22		
b23		
b24		
b25		
b26		
b27		
b28		
b29		
b30		
b31		

1.1.25 333 Standby Mode Status Word

Shows the status of the Standby Mode.

	Standby Mode Status Word ID333	
	Signal	Description
b0	Standby Mode Enabled.	
b1	Standby Mode Ready.	
b2	Modulation Command.	
b3	Standby Mode Warning.	
b4	Precharge Command.	
b5	Reserved	
b6	Reserved	
b7	Reserved	
b8	Reserved	
b9	Reserved	
b10	Reserved	
b11	Reserved	
b12	Reserved	
b13	Reserved	
b14	Reserved	
b15	Reserved	

1.1.26 162 DC Contactor Status Word

Shows the status of DC power contactors.

	DC Contactor Status Word ID162	
	Signal	Description
b0	Reserved	
b1	Dcp Closing Port Set	
b2	Dcp Feedback Port Set	
b3	Dcp Close Command	
b4	Dcp Closed Feedback	
b5	Dcp Closing Fault	
b6	Reserved	
b7	Reserved	
b8	Reserved	
b9	Reserved	
b10	Reserved	
b11	Reserved	
b12	Reserved	
b13	Reserved	
b14	Reserved	
b15	Reserved	

5.2.2. Operation mode and reference monitoring

1.2.1 170 Active Operation Mode

0 Island

1 Droop

2 Droop with base load

3 PQ Control

4 DC Link Voltage (AFE)

5 DC Link Current/Power

6 Active Current/Power

1.2.2 9078 Grid Control Mode Selection Status Word

	Grid Control Mode Selection Status Word ID9078	
	Signal	Description
b0	Island	1: Island Mode is active 0: Island Mode is not active
b1	Droop	1: Droop Mode is active 0: Droop Mode is not active
b2	Droop with base load	1: Droop with based load Mode is active 0: Droop with base load Mode is not active
b3	PQ Control	1: PQ Control Mode is active 0: PQ Control Mode is not active
b4	DC Link Voltage (AFE)	1: DC-link Voltage Control Mode is active 0: DC-link Voltage Control Mode is active
b5	DC Link Current/Power	1: DC-link Current/Power Control Mode is active 0: DC-link Current/Power Control Mode is active
b6	Active Current/Power	1: Active Current/Power Control Mode is active 0: Active Current/Power Control Mode is active
b7	Grid Emulator Mode	
b8	Reserved	
b9	Reserved	
b10	Reserved	
b11	Reserved	
b12	Reserved	
b13	Reserved	
b14	Reserved	
b15	Reserved	

1.2.3 1718 Frequency Ref. Hz

Shows the frequency reference in Hz.

1.2.4 6530 Voltage Ref. %

Shows voltage reference in % of grid nominal voltage.

1.2.5 2874 Active Current Ref. %

Shows the active current reference in % of nominal grid current in microgrid control when operating in drooping control with base load or in PQ-control.

1.2.6 2875 Reactive Current Ref. Act. %

Reactive current reference in % of grid nominal current.

1.2.7 2876 Active Power Ref. %

Active power reference in % of nominal grid power microgrid control when operating in drooping control with base load or in PQ-control.

1.2.8 2877 Reactive Power Ref. %

Reactive power reference in % of grid nominal power in microgrid control when operating in drooping control with base load or in PQ-control.

1.2.9 6141 DC-link Current Ref. Actual %

Actual value of the DC-link current reference in % of the DC-link nominal current.

1.2.10 6543 DC-link Voltage Ref. Actual %

Shows the actual DC-link voltage reference. The percentage is calculated according to DC-link Voltage Ref. Mode (No. 2888).

1.2.11 7693 DC-link Power Ref. Actual %

Actual value of the DC-link power reference in % of the grid nominal power.

5.2.3. Limit monitoring

1.3.1 9077 Limit Control Status Word

Shows the status of the Limit Control Status Word.

	Limit Control Status Word ID9077	
	Signal	Description
b0	Pos. Active Current Limit	0: Positive Active Current Limiter not active (not limiting) 1: Positive Active Current Limiter active (limiting)
b1	Neg. Active Current Limit	0: Negative Active Current Limiter not active (not limiting) 1: Negative Active Current Limiter active (limiting)
b2	Short Term Current Injection Limit	0: Short Term Current Injection Limiter not active (not limitng) 1: Short Term Current Injection Limiter active (limiting)
b3	Reserved	
b4	DC-link Overvoltage control	0: DC-link overvoltage controller is not active (not regualting) 1: DC-link overvoltage controller is active (regualting)
b5	DC-link Undervoltage control	0: DC-link undervoltage controller is not active (not regualting) 1: DC-link undervoltage controller is active (regualting)
b6	Pos. Active Power Limit	0: Pos. Active Power Limiter is not active (not limiting) 1: Pos. Active Power Limiter is active (limiting)
b7	Neg. Active Power Limit	0: Neg. Active Power Limiter is not active (not limiting) 1: Neg. Active Power Limiter is active (limiting)
b8	Pos. Reactive Current Limit	0: Pos. Reactive Current Limiter is not active (not limiting) 1: Pos. Reactive Current Limiter is active (limiting)
b9	Neg. Reactive Current Limit	0: Neg. Reactive Current Limiter is not active (not limiting) 1: Neg. Reactive Current Limiter is active (limiting)
b10	Reserved	
b11	Reserved	
b12	Reserved	
b13	Reserved	
b14	Reserved	
b15	Reserved	

1.3.2 2882 Current Limit (Actl.) %

Grid total output current limit in % of the grid nominal current.

1.3.3 2878 Neg. Active Current Limit (Actl.) %

Shows the active current limit in negative direction in % of the grid nominal current.

1.3.4 2880 Pos. Active Current Limit (Actl.) %

Shows the active current limit in positive direction in % of the grid nominal current.

1.3.5 136 Neg. Reactive Current Limit (Actl.)

Shows the active power limit in negative direction in % of the grid nominal power.

1.3.6 137 Pos. Reactive Current Limit (Actl.)

Shows the reactive current limit in positive direction in % of the grid nominal current.

1.3.7 2879 Neg. Active Power Limit (Actl.) %

Shows the active power limit in negative direction in % of the grid nominal power.

1.3.8 ***2881*** ***Pos. Active Power Limit (Actl.)*** ***%***

Shows the active power limit in positive direction in % of the grid nominal power.

1.3.9 ***6544*** ***Overvoltage Control Limit*** ***V***

Shows the DC-link overvoltage controller Limit.

1.3.10 ***6546*** ***Undervoltage Control Limit*** ***V***

Shows the DC-link undervoltage controller limit.

5.2.4. Start and Stop monitoring.

1.4.1 ***6561*** ***Pre-Charge Active***

Shows status when pre-charging is active.

1.4.2 ***6562*** ***Pre-Charge Ready***

Shows status when pre-charging is ready.

1.4.3 ***171*** ***MCB Close Active***

Shows status when main circuit breaker close request is active.

1.4.4 ***172*** ***MCB Feedback***

Shows status when Main circuit breaker close feedback is active.

5.2.5. Control place monitoring

1.5.1 113 Active Control Place

Shows the active control place that controls the converter.

The following are the selections for the parameter.

0 PC Control (My Drive Insight)

1 Control Panel

2 Fieldbus Control

3 I/O Control

1.5.2 116 FB Forcing Requested

Shows the status of the fieldbus control place forcing request active.

1.5.3 117 I/O Forcing Requested

Shows the status of the I/O-control place forcing request active.

1.5.4 124 Local Control Forcing Requested

Shows the status of the local control place forcing request (made from the control panel REM/LOC button).

5.2.6. Converter output monitoring

1.6.1 9000 Converter Output Current A

Shows the converter output current.

1.6.2 9001 Converter Output Current % %

Shows the converter output current in % of grid nominal current.

1.6.3 9005 Converter Output Voltage V

Shows the converter output voltage.

1.6.4 9015 Converter Output Frequency Hz

Shows converter output frequency.

5.2.7. Grid Monitoring

1.7.1 ***9041*** ***Grid Frequency*** ***Hz***

Shows the actual grid frequency.

1.7.2 ***9040*** ***Grid Voltage*** ***V***

Shows grid line-to-line voltage (RMS) at point of common coupling.

1.7.3 ***9047*** ***Grid Voltage Imbalance*** ***%***

Shows the grid voltage imbalance in % to the nominal grid voltage. A value greater than 3% may indicate grid problems.

1.7.4 ***9060*** ***Grid Current*** ***A***

Shows the current at the point of common coupling.

1.7.5 ***9061*** ***Grid Current %*** ***%***

Shows the current at the point of common coupling in % of grid nominal current.

1.7.6 ***9062*** ***Grid Active Current %*** ***%***

Shows the active current in % of grid nominal current.

1.7.7 ***9063*** ***Grid Reactive Current %*** ***%***

Shows the reactive current in % of grid nominal current.

1.7.8 ***9064*** ***Grid Active Power*** ***kW***

Shows grid active power.

1.7.9 ***9065*** ***Grid Active Power %*** ***%***

Shows the grid active power in % of grid nominal power.

1.7.10 ***9051*** ***Grid Reactive Power*** ***kVA***

Shows the grid reactive power.

1.7.11 ***9052*** ***Grid Reactive Power %*** ***%***

Shows the grid reactive power in % of grid nominal power.

1.7.12 ***9053*** ***Grid Power Factor***

Shows the grid power factor.

See detailed description from 1.1.3 Grid Power Factor (9053)

1.7.13 ***9048*** ***L1-L2 Line Voltage (RMS)*** ***V***

Shows the L1-L2 line voltage (RMS).

1.7.14 ***9049*** ***L2-L3 Line Voltage (RMS)*** ***V***

Shows the L2-L3 line voltage (RMS).

1.7.15 ***9050*** ***L3-L1 Line Voltage (RMS)*** ***V***

Shows the L3-L1 line voltage (RMS).

5.2.8. DC-Link Monitoring

1.8.1 ***9044*** ***DC-link Voltage*** ***V***

Shows the actual DC-link voltage.

1.8.2 ***6542*** ***DC-link Voltage %*** ***%***

Shows the actual DC-link voltage in % of the DC-link nominal voltage.

1.8.3 ***5115*** ***DC-link Current*** ***A***

Shows the actual DC-link current. The DC-link current is calculated from DC-link Power.

$$DC-link\ Current = \frac{DC-link\ Power}{DC-link\ Voltage}$$

1.8.4 ***5116*** ***DC-link Current %*** ***%***

Shows the actual DC-link current in % of the DC-link nominal current.

1.8.5 ***5117*** ***DC-link Power*** ***kW***

Shows the actual DC-link power.

1.8.6 ***5118*** ***DC-link Power %*** ***%***

Shows the actual DC-link power in % of the grid nominal power.

5.2.9. Converter Control Monitoring

1.9.1 ***2923*** ***Actual Switching Frequency*** ***Hz***

Shows the actual switching frequency.

1.9.2 ***5101*** ***Modulation Index***

Shows the modulation index.

1.9.3 ***2952*** ***Control Unit Temperature*** ***°C***

Shows the temperature of the control unit.

5.2.10. Protection monitoring

5.2.10.1. Measured temp protection status

1.10.1.1 5200 Protection 1 Temp. **°C**

Shows the temperature measured by the Temperature Measurement board channel configured for Temp. 1 Input (No. 5206) protection.

1.10.1.2 5201 Protection 2 Temp. **°C**

Shows the temperature measured by the Temperature Measurement board channel configured for Temp. 2 Input (No. 5210) protection.

1.10.1.3 5202 Protection 3 Temp. **°C**

Shows the temperature measured by the Temperature Measurement board channel configured for Temp. 3 Input (No. 5214) protection.

1.10.1.4 5203 Protection 4 Temp. **°C**

Shows the temperature measured by the Temperature Measurement board channel configured for Temp. 4 Input (No. 5218) protection.

1.10.1.5 5204 Protection 5 Temp. **°C**

Shows the temperature measured by the Temperature Measurement board channel configured for Temp. 5 Input (No. 5222) protection.

1.10.1.6 5205 Protection 6 Temp. **°C**

Shows the temperature measured by the Temperature Measurement board channel configured for Temp. 6 Input (No. 5226) protection.

1.10.1.7 5273 Protection 7 Temp. **°C**

Shows the temperature measured by the Temperature Measurement board channel configured for Temp. 7 Input (No. 5239) protection.

1.10.1.8 5274 Protection 8 Temp. **°C**

Shows the temperature measured by the Temperature Measurement board channel configured for Temp. 8 Input (No. 5240) protection.

1.10.1.9 5275 Protection 9 Temp. **°C**

Shows the temperature measured by the Temperature Measurement board channel configured for Temp. 9 Input (No. 5241) protection.

1.10.1.10 5276 Protection 10 Temp. **°C**

Shows the temperature measured by the Temperature Measurement board channel configured for Temp. 9 Input (No. 5242) protection.

1.10.1.11 131 External Ambient Temperature **°C**

5.2.10.2. Supervision monitoring

1.10.2.1 9054 Grid Supervision Status Word

Shows the grid supervision status for over/undervoltage and high/low frequency supervision.

When Grid Code functions are active all below warning and faults are disabled.

	Grid Supervision Status Word ID9054	
	Signal	Description
b0	Freq. Below Low Delayed Trip Lim.	1: Grid frequency is below the lower delayed fault limit
b1	Freq. Below Low Warn. Lim.	1: Grid frequency is below the lower warning limit
b2	Freq. Above High Warn. Lim.	1: Grid frequency is above the higher warning limit
b3	Freq. Above High Delayed Trip Lim.	1: Grid frequency is above the higher delayed fault limit
b4	Freq. Above High Inst. Trip Lim.	1: Grid frequency is above the Instant higher fault limit
b5	Freq. Below Low Inst. Trip Lim.	1: Grid frequency is below the Instant lower fault limit
b6	Volt. Below Low Delayed Trip Lim.	1: Grid voltage is below the lower delayed fault limit
b7	Volt. Below Low Warning Lim.	1: Grid voltage is below the lower warning limit
b8	Volt. Above High Warning Lim.	1: Grid voltage is above the higher warning limit
b9	Volt. Above High Delayed Trip Lim.	1: Grid voltage is above the higher delayed fault limit
b10	Volt. Above High Inst. Trip Lim.	1: Grid voltage is above the Instant higher fault limit
b11	Volt. Below Low Inst. Trip Lim.	1: Grid voltage is below the Instant lower fault limit
b12	Reserved	
b13	Reserved	
b14	Reserved	
b15	Reserved	

5.2.11. Custom Status Word monitoring

1.11.1 2410 Custom Status Word

Shows the current status of the Custom Status Word.

5.2.12. Power unit monitoring

1.12.1 2836 Power Capacity

Shows the power capacity of the drive as percentage. The value is derived from the amount of active power units compared to nominal power unit count of the converter.

1.12.2 2830 Unit Nominal Voltage V

Shows the nominal voltage setting as a result of the setting of parameter Unit Voltage Class (No. 2832).

1.12.3 2831 Unit Nominal Current A

Shows the nominal current of the unit.

1.12.4 2950 Heat Sink Temperature °C

Shows the temperature of the power unit heat sink.

1.12.5 249 Active Power Unit Mask

Shows the actual number of power units active based on the value.

The value is given bitwise per each power unit. Bit 0 corresponds to the first port in the Star coupler board, and bit 15 to the 16th port and so on. An active bit shows the corresponding power unit, and an inactive bit shows that the unit is not active/in use.

This readout is relevant only for converters with multiple power units, connected to the control board with the Star coupler board.

5.2.13. Cooling fan monitoring

1.13.1 2931 Main Fan Speed rpm

Shows the speed of the main cooling fan (applicable only for air cooled converters).

1.13.2 2926 Internal Fan Speed rpm

Shows the speed of the internal cooling fan (applicable only for air cooled converters).

5.2.14. Fieldbus process data monitoring

Also, see chapter Fieldbus Control In Detail

1.14.1 1335 Fieldbus Control Word

Shows Fieldbus Control Word.

	Fieldbus Control Word ID1335	
	Signal	Description
b0	Switch On Enabled	Enable operation.
b1	MCB Close Enabled	Enable MCB Close
b2	Quick Stop	False signal will enable quick stop
b3	Start	Start Command
b4	Pre-charge	Pre-Charge Command
b5	--	
b6	--	
b7	Warning/Fault Reset	Fault Reset
b8	--	
b9	--	
b10	Data Valid	
b11	Watchdog	
b12	Vendor Specific Bit 1	
b13	Vendor Specific Bit 2	
b14	Vendor Specific Bit 3	
b15	Vendor Specific Bit 4	

1.14.2 1307 Fieldbus Status Word

	Fieldbus Status Word ID1307	
	Signal	Description
b0	Ready to Switch On	0: Not ready to switch on, 1: Ready to switch on
b1	Ready to Run	1: Converter is ready to start modulating
b2	Running	1: Converter is modulating
b3	Fault	1: One or more faults are active
b4	--	Reserved
b5	Quick Stop	0: Quick stop active, 1: Quick stop not active
b6	--	Reserved
b7	Warning	1: One or more warnings are active
b8	--	Reserved
b9	Control by PLC	1: The active control place is fieldbus
b10	--	Reserved
b11	Run Enabled	0: Run enable from the dedicated input signal is missing 1: Run enable from the dedicated input signal is present
b12	--	Reserved
b13	--	Reserved
b14	--	Reserved
b15	Watchdog	Outgoing fieldbus watchdog bit

1.14.3 1500 FB Microgrid Control Word

	Fieldbus Micro Grid Control Word ID1500	
	Signal	Description
b0	Force DC-link Voltage Control Mode	0: Do not force the DC-link Voltage Control (AFE) operating mode. 1: Force the DC-link Voltage Control (AFE) operating mode.
b1	Force Island Control Mode	0: Do not force the Island operating mode. 1: Force the Island operating mode.
b2	Force Droop Control Mode	0: Do not force the Droop Control operating mode. 1: Force the Droop Control operating mode.
b3	Force Droop Control with Base Load Mode	0: Do not force the Droop Control with Base Load operating mode. 1: Force the Droop Control with Base Load operating mode.
b4	Force PQ Control Mode	0: Do not force the PQ Control operating mode. 1: Force the PQ Control operating mode.
b5	Force DC-link Current/Power Control Mode	0: Do not force the DC-link Current/Power operating mode. 1: Force the DC Current/Power operating mode.
b6	Force AC Current/Power Control Mode	0: Do not force the AC Current/Power Control operating mode. 1: Force the AC Current/Power Control operating mode.
b7	Increase Frequency Reference	0: Do not increase the grid frequency reference. 1: Increase the grid frequency reference.
b8	Decrease Frequency Reference	0: Do not decrease the grid frequency reference. 1: Decrease the grid frequency reference.
b9	Frequency Reference Reset	0: Do not reset the grid frequency reference. 1: Reset the grid frequency reference.
b10	Increase Voltage Reference	0: Do not increase the grid voltage reference. 1: Increase the grid voltage reference.
b11	Decrease Voltage Reference	0: Do not decrease the grid voltage reference. 1: Decrease the grid voltage reference.
b12	Voltage Reference Reset	0: Do not reset the grid voltage reference. 1: Reset the grid voltage reference.
b13	Frequency Reference Reset Value Selection	0: Reset the grid frequency reference to grid nominal value. 1: Reset the grid frequency reference to grid actual value.
b14	Voltage Reference Reset Value Selection	0: Reset the grid voltage reference to grid nominal value. 1: Reset the grid voltage reference to grid actual value.
b15	Reserved	

1.14.4 6533 FB DC-link Voltage Ref. %

Shows the incoming fieldbus process data DC-link voltage reference. The percentage is calculated according to DC-link Voltage Ref. Mode (No. 2888).

1.14.5 4512 FB Overvoltage Limit %

Shows the value of the incoming fieldbus process data for the DC-link overvoltage level in % of the DC-link nominal voltage.

1.14.6 4510 FB Undervoltage Limit %

Shows the value of the incoming fieldbus process data for the DC-link undervoltage level in % of the DC-link nominal voltage.

1.14.7 1501 FB Active Current Ref. %

Shows the incoming fieldbus process data active current reference in % of the grid nominal current.

1.14.8 1502 FB Reactive Current Ref. %

Shows the incoming fieldbus process data reactive current reference in % of the grid nominal current.

1.14.9 1504 FB Active Power Ref. %

Shows the incoming fieldbus process data active power reference in % of the grid nominal power.

1.14.10 1505 FB Reactive Power Ref. %

Shows the incoming fieldbus process data reactive power reference in % of the grid nominal power.

1.14.11 1506 FB Freq. Ref. Hz

Shows the incoming fieldbus frequency reference process data value.

1.14.12 1508 FB Voltage Ref. %

Shows the incoming fieldbus process data voltage reference in % of the nominal grid voltage.

1.14.13 1509 FB Active Current Limit Neg. %

Shows the incoming fieldbus process data active current limit in negative direction in % of the grid nominal current.

1.14.14 1510 FB Active Current Limit Pos. %

Shows the incoming fieldbus process data active current limit in positive direction in % of the grid nominal current.

1.14.15 1511 FB Output Current Limit %

Shows the incoming fieldbus process data output current limit in % of the grid nominal current.

1.14.16 1512 FB Active Power Limit Neg. %

Shows the incoming fieldbus process data active power limit in negative direction in % of the grid nominal power.

1.14.17 1513 FB Active Power Limit Pos. %

Shows the incoming fieldbus process data active power limit in positive direction in % of the grid nominal power.

1.14.18 7690 FB DC-link Power Ref. %

Shows the incoming fieldbus process data DC-link power reference in % of the nominal power.

1.14.19 6139 FB DC-link Current Ref. %

Shows the fieldbus DC-link current reference in % of the DC-link nominal current.

1.14.20 4976 FB DC-link Current Neg.Direction Limit %

Set the limit for negative direction DC-link current in % of the DC-link nominal current. To set direction nature refer Parameter No 2947.

1.14.21 4977 FB DC-link Current Pos.Direction Limit %

Set the limit for positive direction DC-link current in % of the DC-link nominal current. To set direction nature refer Parameter No 2947.

5.2.15. Grid Code Monitoring

1.15.1 5558 Power Factor Reference

Final Power Factor reference after Power Factor parameter group G2.11.1 Power Factor

1.15.2 5559 Power Factor Reactive Reference

Power Factor reference as Reactive Current Reference.

1.15.3 5572 Grid Code State

	Grid Code State ID5572	
	Signal	Description
b0	Enable Grid Code	Grid Code functions are active
b1	Control Run	Drive is modulating
b2	Grid Code Stop Request	Grid Code prevents starting
b3	Grid Code Trip Request	Grid Code functions request disconnection.
b4	LineFreqHighTrip1_Act	Frequency above trip limit 1
b5	LineFreqHighTrip2_Act	Frequency above trip limit 2
b6	LineFreqHighTrip3_Act	Frequency above trip limit 3
b7	LineFreqLowTrip1_Act	Frequency below trip limit 1
b8	LineFreqLowTrip2_Act	Frequency below trip limit 2
b9	LineFreqLowTrip3_Act	Frequency below trip limit 3
b10	Line Frequency OK	Frequency inside reconnection limits
b11	Line Voltage OK	Voltage inside reconnection limits
b12	LineVoltHighTrip1_Act	Voltage above trip limit 1
b13	LineVoltHighTrip2_Act	Voltage above trip limit 2
b14	LineVoltHighTrip3_Act	Voltage above trip limit 3
b15	LineVoltLowTrip1_Act	Voltage below trip limit 1
b16	LineVoltLowTrip2_Act	Voltage below trip limit 2
b17	LineVoltLowTrip3_Act	Voltage below trip limit 3
b18	LineVoltLowTrip4_Act	Voltage below trip limit 4
b19	GC_DynSuppReactiveFeedAct	Dynamic support is feeding reactive
b20	HFPR_ForcePowerRefMode	High Freq Power Ref active
b21	LFPR_ForcePowerRefMode	Low Freq Power Ref active
b22	QU_ReactiveReference	Q(U) Reactive power active
b23	Reconnection	Reconnection sequence active
b24	Restricted grid support active	Active and reactive are forced zero
b25	Anti-Islanding Active	
b26		
b27		
b28		
b29		
b30		
b31		

1.15.4 5626 Grid Voltage Scaled

Scaled grid voltage. 100% = Grid Nominal Voltage.

1.15.5 5627 Grid Frequency Scaled

Scaled grid frequency. 100% = Grid Nominal Frequency

1.15.6 6239 DataLoggerAppTrigger

Values that can be used to trigger datalogger in certain situation

Control Fault	+2
Grid Code Trip Request	+4

Setting trigger level to 1 datalogger will trig to both fault and Grid Code Trip.

Setting value to 3 datalogger will trip only to Grid Code trip.

1.15.7 5716 Grid Voltage Scaled High Filt %

Grid voltage high filtered for reactive power control functions.

6. Application parameter lists

6.1. Basic parameters

Index	No.	Parameter	Def.	Min	Max	Form	Unit	Type	Handling
2.1.1	6536	Grid Nominal Frequency	50	0	2000	0,01	Hz	REAL	Conf.
2.1.2	6537	Grid Nominal Voltage	690			0,1	V	REAL	Conf.
2.1.3	6538	Grid Nominal Current	416			0,01	A	REAL	Conf.
2.1.4	6539	Grid Voltage Feedback Source*	0	0	2	1		UINT	Conf.
2.1.5	6541	Filter Voltage Feedback Source*	0	0	2	1		UINT	Conf.
2.1.6	6547	Filter Voltage Feedback Location*	0	0	1	1		UINT	Conf.
2.1.7	6123	Transformer Grid-Side Voltage	690	1	132000	0,01	V	REAL	Conf.
2.1.8	6124	Transformer Converter-Side Voltage	690	1	132000	0,01	V	REAL	Conf.
2.1.9	6125	Transformer Phase Shift	0	-180	180	1	°	REAL	Conf.
2.1.10	6126	Transformer Nominal Power	0	0	100000	0,01	kVA	REAL	Conf.
2.1.11	6127	Transformer Nominal Frequency	50	1	2000	1	Hz	REAL	Conf.
2.1.12	6128	Transformer Short-Circuit Impedance	0	0	50	0,01	%	REAL	Conf.
2.1.13	6129	Transformer Nom. Load Losses	0	0	1000	0,01	kW	REAL	Conf.
2.1.14	6133	Grid Voltage Feedback Location*	0	0	1	1		UINT	Conf.
2.1.15	2834	DC-link Nominal Voltage	0	0	1500	0,01	V	REAL	Conf.
2.1.16	2832	Unit Voltage Class	1	1	4	1		UINT	Conf.
2.1.17	2833	Overload Mode	2	0	3	1		UINT	Conf.
2.1.18	2947	Current/Power Positive Direction	0	0	1	1		UINT	Conf.
2.1.19	9654	Paralleling Sync. Mode	0	0	1	1		UINT	Conf.

*See chapter 3.7 iC7-Hybrid String PCS 300 kVA hardware parameters

6.2. Control mode and references

6.2.1. Control mode

Index	No.	Parameter	Def.	Min	Max	Form	Unit	Type	Handling
2.2.1.1	161	Operation Mode	4	0	7	1		UINT	Conf.
2.2.1.2	163	Converter Reference Mode	0	0	1	1		UINT	Conf.
2.2.1.3	4998	Harmonic Compensation Mode	0	0	2	1		UINT	Conf.
2.2.1.4	306	Synthetic Inertia Mode	0	0	1	1		BOOL	Conf.

6.2.2. Grid Frequency Reference

Index	No.	Parameter	Def.	Min	Max	Form	Unit	Type	Handling
2.2.2.1	5050	Freq. Ref. Source	0	0	1	1		UINT	Conf.
2.2.2.2	5051	Minimum Freq. Ref.	45	25	75	0,1	Hz	REAL	Conf.
2.2.2.3	5052	Maximum. Freq. Ref.	66	25	75	0,1	Hz	REAL	Conf.
2.2.2.4	5053	Freq. Increase. Input	0	0	29999	1		UINT	Conf.
2.2.2.5	5054	Freq. Decrease. Input	0	0	29999	1		UINT	Conf.
2.2.2.6	5055	Freq. Reset Input	0	0	29999	1		UINT	Conf.
2.2.2.7	5056	Freq. Ref. Offset	0	-5	5	0,1	Hz	REAL	Conf.
2.2.2.8	5057	Freq. Ref. Adjust Rate	0.05	0.00 1	10	0,1	Hz/s	REAL	Conf.
2.2.2.9	5058	Max. Freq. Ref. Adjust	2	0	25	0,1	Hz	REAL	Conf.
2.2.2.10	5059	Freq. Ref. Reset Stop State Value	1	0	3	1		UINT	Conf.
2.2.2.11	5060	Freq. Ref. Reset I/O. Value	1	0	2	1		UINT	Conf.
2.2.2.12	5061	Freq.Ref. Reset AFE Mode Value	1	0	2	1		UINT	Conf.
2.2.2.13	5062	Freq. Ramp Time	5	0	10000	0,1	s	REAL	Conf.
2.2.2.14	5063	Freq. Droop Gain	1	0	100	0,1	Hz	REAL	Conf.
2.2.2.15	5064	Freq. Droop Tc	0.005	0	10000	0,1	s	REAL	Conf.
2.2.2.16	5065	Freq. Drooping Base Load Scale	100	0	1000	0,1	%	REAL	Conf.

6.2.3. Grid Voltage Reference

Index	No.	Parameter	Def.	Min	Max	Form	Unit	Type	Handling
2.2.3.1	5066	Voltage Ref. Source	0	0	1	1		UINT	Conf.
2.2.3.2	5067	Min. Voltage Ref.	80	50	100	0,1	%	REAL	Conf.
2.2.3.3	5068	Max. Voltage Ref.	120	100	150	0,1	%	REAL	Conf.
2.2.3.4	5069	Voltage Incr. Input	0	0	29999	1		UINT	Conf.
2.2.3.5	5070	Voltage Decr. Input	0	0	29999	1		UINT	Conf.
2.2.3.6	5071	Voltage Reset Input	0	0	29999	1		UINT	Conf.
2.2.3.7	5072	Voltage Ref. Offset	0	-20	20	0,1	%	REAL	Conf.
2.2.3.8	5073	Voltage Ref. Adjust Rate	0.1	0.01	10	0,1	%/s	REAL	Conf.
2.2.3.9	5074	Max. Voltage Ref. Adjust	2	0	20	0,1	%	REAL	Conf.
2.2.3.10	5075	Voltage Ref. Reset Stop State Value	1	0	3	1		UINT	Conf.
2.2.3.11	5076	Voltage Ref. Reset I/O. Value	1	0	2	1		UINT	Conf.
2.2.3.12	5077	Voltage Ref. Reset AFE Mode Value	1	0	2	1		UINT	Conf.
2.2.3.13	5078	Voltage Ramp Time	0.1	0	10000	0,1	s	REAL	Conf.
2.2.3.14	5079	Field Weakning Point Freq.	45	0	2000	0,1	Hz	REAL	Conf.
2.2.3.15	5085	Voltage Droop Gain	10	0	100	0,1	%	REAL	Conf.
2.2.3.16	5086	Voltage Droop Tc	0.005	0	10000	0,1	s	REAL	Conf.
2.2.3.17	5087	Voltage Drooping Base Load Scale	100	0	10000	0,1	%	REAL	Conf.

6.2.4. Grid Current Reference

Index	No.	Parameter	Def.	Min	Max	Form	Unit	Type	Handling
2.2.4.1	245	Active Current Ref. Source	0	0	1	1		UINT	Conf.
2.2.4.2	230	Active Current Ref.	0	-300	300	0,01	%	REAL	Conf.
2.2.4.3	231	Active Current Ref. Ramp Rate Increasing	100	-1	1000	0,001	%/s	REAL	Conf.
2.2.4.4	247	Active Current Ref. Ramp Rate Decreasing	100	-1	1000	0,001	%/s	REAL	Conf.
2.2.4.5	232	Active Current Ramp Reset	1	0	3	1		UINT	Conf.
2.2.4.6	5099	Active Current Ref. Filter Tc	0.05	0.001	1000	0,01	s	REAL	Conf.
2.2.4.7	3021	Reactive Current Ref. Source	0	0	1	1		UINT	Conf.
2.2.4.8	233	Reactive Current Ref.	0	-300	300	0,1	%	REAL	Conf.
2.2.4.9	234	Reactive Current Ramp Rate	10	-1	1000	0,1	%/s	REAL	Conf.
2.2.4.10	6570	Reactive Current Ref. Filter Tc	0.00	0	120	0,01	s	REAL	Conf.

6.2.5. Grid Power Reference

Index	No.	Parameter	Def.	Min	Max	Form	Unit	Type	Handling
2.2.5.1	6550	Active Power Ref. Source	0	0	1	1		UINT	Conf.
2.2.5.2	235	Active Power Ref.	0	-300	300	0,01	%	REAL	Conf.
2.2.5.3	236	Active Power Ref. Ramp Rate Increasing	100	-1	20000	0,001	%/s	REAL	Conf.
2.2.5.4	248	Active Power Ref. Ramp Rate Decreasing	100	-1	20000	0,001	%/s	REAL	Conf.
2.2.5.5	237	Active Power Ramp Reset	1	0	3	1		UINT	Conf.
2.2.5.6	5109	Active Power Ref. Filter Tc	0	0	120	0,001	s	REAL	Conf.
2.2.5.7	6549	Reactive Power Ref. Source	0	0	1	1		UINT	Conf.
2.2.5.8	238	Reactive Power Ref.	0	-300	300	0,1	%	REAL	Conf.
2.2.5.9	239	Reactive Power Ref. Ramp	10	-1	1000	0,1	%/s	REAL	Conf.
2.2.5.10	6586	Reactive Power Ref. Filter Tc	0	0	120	0,01	s	REAL	Conf.

6.2.6. DC-Link Voltage Reference

Index	No.	Parameter	Def.	Min	Max	Form	Unit	Type	Handling
2.2.6.1	2916	DC-link Voltage Ref. Source	0	0	1	1		UINT	Conf.
2.2.6.2	2910	DC-link Voltage Ref.	105	100	200	0,1	%	REAL	Conf.
2.2.6.3	2914	DC-link Voltage Ref. Offset	0	-20	20	0,01	%	REAL	Conf.
2.2.6.4	2912	DC-link Voltage Droop Gain	0	0	10	0,01	%	REAL	Conf.
2.2.6.5	2893	DC-link Voltage Ramp Rate	10	-1	1000	0,01	%/s	REAL	Conf.
2.2.6.6	2894	DC-link Voltage Ref. Filter Tc	0.05	0	1	0,01	s	REAL	Conf.
2.2.6.7	2895	DC-link Voltage Ref. Float Filter Tc	0.05	0	1	0,01	s	REAL	Conf.
2.2.6.8	2888	DC-link Voltage Ref. Mode	0	0	1	1		UINT	Conf.

6.2.7. DC-Link Current Reference

Index	No.	Parameter	Def.	Min	Max	Form	Unit	Type	Handling
2.2.7.1	6138	DC-link Current Ref. Source	0	0	2	1		UINT	Conf.
2.2.7.2	6136	DC-link Current Ref.	0	-300	300	0,01	%	REAL	Conf.
2.2.7.3	6135	DC-link Current Ramp Rate	-1	-1	1000	0,01	%/s	REAL	Conf.
2.2.7.4	6137	DC-link Current Ramp Reset	0	0	3	1		UINT	Conf.
2.2.7.5	6140	DC-link Current Ref. Filter Tc	0.05	0.001	1	0,001	s	REAL	Conf.
2.2.7.6	6142	DC-link Current Ref. Analog Input	10133	0	29999	1		UINT	Conf.
2.2.7.7	6143	DC-link Current Ref. Analog Max.	100	-300	300	0,01	%	REAL	Conf.
2.2.7.8	6144	DC-link Current Ref. Analog Min.	-100	-300	300	0,01	%	REAL	Conf.

6.2.8. DC-Link Power Reference

Index	No.	Parameter	Def.	Min	Max	Form	Unit	Type	Handling
2.2.8.1	7890	DC-link Power Ref. Source	0	0	2	1		UINT	Conf.
2.2.8.2	7689	DC-link Power Ref.	0	-300	300	0,01	%	REAL	Conf.
2.2.8.3	7691	DC-link Power Ramp Rate	-1	-1	1000	0,01	%/s	REAL	Conf.
2.2.8.4	7692	DC-link Power Ramp Reset	0	0	3	1		UINT	Conf.
2.2.8.5	7694	DC-link Power Ref. Analog Input	10133	0	29999	1		UINT	Conf.
2.2.8.6	7695	DC-link Power Ref. Analog Max.	100	-300	300	0,01	%	REAL	Conf.
2.2.8.7	7696	DC-link Power Ref. Analog Min.	-100	-300	300	0,01	%	REAL	Conf.

6.3. Limits

6.3.1. Grid Current Limit

Index	No.	Parameter	Def.	Min	Max	Form	Unit	Type	Handling
2.3.1.1	2343	Enable Freq. Based Current Limit	1	0	1	1		BOOL	Conf.
2.3.1.2	2853	Current Limit Priority	1	0	1	1		UINT	Conf.
2.3.1.3	2854	Neg. Active Current Limit Source	0	0	1	1		UINT	Conf.
2.3.1.4	2855	Neg. Active Current Limit	-300	-300	0	0,1	%	REAL	Conf.
2.3.1.5	2856	Neg. Active Current Limit Ramp Up Rate	1000	0	1000	0,1	%/s	REAL	Conf.
2.3.1.6	2857	Pos. Active Current Limit Source	0	0	1	1		UINT	Conf.
2.3.1.7	2858	Pos. Active Current Limit	300	0	300	0,01	%	REAL	Conf.
2.3.1.8	2852	Current Limit Source	0	0	1	1		UINT	Conf.
2.3.1.9	2851	Current Limit	110	0	1000	0,01	%	REAL	Conf.
2.3.1.10	133	Neg. Reactive Current Limit	-300	-300	0	0,01	%	REAL	Conf.
2.3.1.11	132	Pos. Reactive Current Limit	300	0	300	0,01	%	REAL	Conf.

6.3.2. Grid Power Limit

Index	No.	Parameter	Def.	Min	Max	Form	Unit	Type	Handling
2.3.2.1	2861	Neg. Active Power Limit Source	0	0	1	1		UINT	Conf.
2.3.2.2	2862	Neg. Active Power Limit	-300	-300	0	0,1	%	REAL	Conf.
2.3.2.3	2863	Neg. Active Power Limit Ramp Up Rate	1000	0	1000	0,1	%/s	REAL	Conf.
2.3.2.4	2864	Pos. Active Power Limit Source	0	0	1	1		UINT	Conf.
2.3.2.5	2865	Pos. Active Power Limit	300	0	300	0,01	%	REAL	Conf.

6.3.3. Short Term Current Injection

Index	No.	Parameter	Def.	Min	Max	Form	Unit	Type	Handling
2.3.3.1	2873	Short Term Current Enabled	1	0	1	1		BOOL	Conf.
2.3.3.2	2866	Short Term Current Limit	140	0	200	0,01	%	REAL	Conf.
2.3.3.3	2867	Short Term Current Time	3	0	3	0,001	s	REAL	Conf.
2.3.3.4	2917	Short Term Current Mode	0	0	2	1		UINT	Conf.
2.3.3.5	5097	Short Term Current Switching Freq.	8000	2000	10000	0,01	Hz	REAL	Conf.

6.3.4. DC-Link Voltage Limiters

6.3.4.1.Undervoltage limit controller

Index	No.	Parameter	Def.	Min	Max	Form	Unit	Type	Handling
2.3.4.1.1	1809	Undervoltage Control	1	0	1	1		BOOL	Conf.
2.3.4.1.2	2900	Undervoltage Limit Source	0	0	1	1		UINT	Conf.
2.3.4.1.3	2901	Undervoltage Limit	70	0	320	0,01	%	REAL	Conf.
2.3.4.1.4	5852	DC-link Undervoltage Limit Ref. Analog Input	0	0		1		UINT	Conf.
2.3.4.1.5	5853	Undervoltage Limit Analog Input Max	80	0	150	1	%	REAL	Conf.
2.3.4.1.6	5854	Undervoltage Limit Analog Input Min	70	0	150	1	%	REAL	Conf.

6.3.4.2.Overvoltage limit controller

Index	No.	Parameter	Def.	Min	Max	Form	Unit	Type	Handling
2.3.4.2.1	1802	Overvoltage Control	1	0	1	1		BOOL	Conf.
2.3.4.2.2	2897	Overvoltage Limit Source	0	0	1	1		UINT	Conf.
2.3.4.2.3	2898	Overvoltage Limit	154	0	320	0,01	%	REAL	Conf.
2.3.4.2.4	5849	DC-link Overvoltage Limit Ref. Analog Input	0	0		1		UINT	Conf.
2.3.4.2.5	5850	Overvoltage Limit Analog Input Max	120	0	150	1	%	REAL	Conf.
2.3.4.2.6	5851	Overvoltage Limit Analog Input Min	110	0	150	1	%	REAL	Conf.

6.3.4.1. DC-link Current Limits

Index	No.	Parameter	Def.	Min	Max	Form	Unit	Type	Handling
2.3.5.1	4972	DC-link Current Limit Enable	0	0	1	1		BOOL	Conf.
2.3.5.2	4973	DC-link Current Limit Source	0	0	2	1		UINT	Conf.
2.3.5.3	4974	DC-link Current Pos.Direction Limit	150	0	150	0,01	%	REAL	Conf.
2.3.5.4	4975	DC-link Current Neg.Direction Limit	-150	-150	0	0,01	%	REAL	Conf.

6.4. I/O Inputs

6.4.1. I/O Digital Inputs

Index	No.	Parameter	Def.	Min	Max	Form	Unit	Type	Handling
2.4.1.1	103	Run Enable Input	1	0	29999	1		UINT	Conf.
2.4.1.2	4557	External Event 1 Input	0	0	29999	1		UINT	Conf.
2.4.1.3	4560	External Event 2 Input	0	0	29999	1		UINT	Conf.
2.4.1.4	2400	Cooling Monitor Input	1	0	29999	1		UINT	Conf.
2.4.1.5	4513	Force I/O Control Input	0	0	29999	1		UINT	Conf.
2.4.1.6	4511	Force FB Control Input	0	0	29999	1		UINT	Conf.
2.4.1.7	200	I/O Start Input	0	0	65535	1		UINT	Conf.
2.4.1.8	201	I/O Stop Input	0	0	65535	1		UINT	Conf.
2.4.1.9	203	I/O Reset Input	0	0	29999	1		UINT	Conf.
2.4.1.10	4728	Switch On Enable Input	10114	0	65535	1		UINT	Conf.
2.4.1.11	6567	Pre Charge Request Inp.	10115	0	65535	1		UINT	Conf.
2.4.1.12	6557	MCB Close Enable Input	1	0	29999	1		UINT	Conf.
2.4.1.13	6552	MCB Feedback Close Input*	10116	0	65535	1		UINT	Conf.
2.4.1.14	6553	MCB Feedback Open Input*	0	0	29999	1		UINT	Conf.
2.4.1.15	6554	MCB Tripped Input	0	0	29999	1		UINT	Conf.
2.4.1.16	5055	Freq. Reset Input	0	0	29999	1		UINT	Conf.
2.4.1.17	5054	Freq. Decrease. Input	0	0	29999	1		UINT	Conf.
2.4.1.18	5053	Freq. Increase. Input	0	0	29999	1		UINT	Conf.
2.4.1.19	5071	Voltage Reset Input	0	0	29999	1		UINT	Conf.
2.4.1.20	5070	Voltage Decr. Input	0	0	29999	1		UINT	Conf.
2.4.1.21	5069	Voltage Incr. Input	0	0	29999	1		UINT	Conf.
2.4.1.22	212	Quick Stop Input	0	0	29999	1		UINT	Conf.
2.4.1.23	5104	Quick Stop Input 2	0	0	29999	1		UINT	Conf.
2.4.1.24	127	AC Surge Prot. Device Input	0	0	29999	1		UINT	Conf.
2.4.1.25	128	DC Surge Prot. Device Input	0	0	29999	1		UINT	Conf.
2.4.1.26	5779	DC Ground Fault Input	0	0	29999	1		UINT	Conf.

*See chapter 3.7 iC7-Hybrid String PCS 300 kVA hardware parameters

6.4.2. I/O Analog Inputs

Index	No.	Parameter	Def.	Min	Max	Form	Unit	Type	Handling
2.4.2.7	6142	DC-link Current Ref. Analog Input	10133	0	29999	1		UINT	Conf.
2.4.2.8	7694	DC-link Power Ref. Analog Input	10133	0	29999	1		UINT	Conf.

6.5. I/O Outputs

6.5.1. Digital Outputs

Index	No.	Parameter	Def.	Min	Max	Form	Unit	Type	Handling
2.5.1.1	205	Ready Output	0	0	65535	1		UINT	Conf.
2.5.1.2	206	Run Output	0	0	65535	1		UINT	Conf.
2.5.1.3	208	Static Fault Output	0	0	65535	1		UINT	Conf.
2.5.1.4	209	Static Warning Output	0	0	65535	1		UINT	Conf.
2.5.1.5	5180	Toggling Fault Output	0	0	65535	1		UINT	Conf.
2.5.1.6	5181	Toggling Warning Output	0	0	65535	1		UINT	Conf.
2.5.1.7	5193	FB CTW Bit 12 Output	0	0	29999	1		UINT	Conf.
2.5.1.8	5194	FB CTW Bit 13 Output	0	0	29999	1		UINT	Conf.
2.5.1.9	5198	FB CTW Bit 14 Output	0	0	29999	1		UINT	Conf.
2.5.1.10	5191	FB CTW Bit 15 Output	0	0	29999	1		UINT	Conf.
2.5.1.11	5157	DC-link Voltage Superv. Output	0	0	65535	1		UINT	Conf.
2.5.1.12	5158	DC-link Voltage Superv. Limit	100	0	500	0,01	V	REAL	Conf.
2.5.1.13	5178	Local Control Active Output	0	0	65535	1		UINT	Conf.
2.5.1.14	5177	I/O Control Active Output	0	0	65535	1		UINT	Conf.
2.5.1.15	5197	Fieldbus Control Active Output	0	0	65535	1		UINT	Conf.
2.5.1.16	5189	Active Event 1 Output	0	0	65535	1		UINT	Conf.
2.5.1.17	5188	Event 1 Number	0	0	65535	0,01		UINT	Conf.
2.5.1.18	5190	Active Event 2 Output	0	0	65535	1		UINT	Conf.
2.5.1.19	5290	Event 2 Number	0	0	65535	0,01		UINT	Conf.
2.5.1.20	5254	Limit Supervision 1 Output	0	0	65535	1		UINT	Conf.
2.5.1.21	217	No Warning Output	0	0	65535	1		UINT	Conf.
2.5.1.22	218	No Fault Output	0	0	65535	1		UINT	Conf.
2.5.1.23	125	Local Control Forcing Requested Output	0	0	29999	1		UINT	Conf.
2.5.1.24	121	I/O Forcing Requested Output	0	0	65535	1		UINT	Conf.
2.5.1.25	120	FB Forcing Requested Output	0	0	65535	1		UINT	Conf.

6.5.2. Delayed Digital outputs

Index	No.	Parameter	Def.	Min	Max	Form	Unit	Type	Handling
2.5.2.1	8032	Delayed Output 1 Content Sel.	0	0	14	1		UINT	
2.5.2.2	8036	Delayed Output 1 On Delay	0	0	320	0,01	s	REAL	
2.5.2.3	8038	Delayed Output 1 Off Delay	0	0	320	0,01	s	REAL	
2.5.2.4	8040	Delayed Output 1 Output	0	0	29999	1		UINT	
2.5.2.5	8033	Delayed Output 2 Content Sel.	0	0	14	1		UINT	
2.5.2.6	8037	Delayed Output 2 On Delay	0	0	320	0,01	s	REAL	
2.5.2.7	8039	Delayed Output 2 Off Delay	0	0	320	0,01	s	REAL	
2.5.2.8	8041	Delayed Output 2 Output	0	0	29999	1		UINT	

6.5.3. Analog outputs

Index	No.	Parameter	Def.	Min	Max	Form	Unit	Type	Handling
2.5.3.1	2450	Active Current Output	0	0	65535	1		UINT	Conf.
2.5.3.2	2451	Absolute Active Current Output	0	0	65535	1		UINT	Conf.
2.5.3.3	2452	Reactive Current Output	0	0	65535	1		UINT	Conf.
2.5.3.4	2453	Output Current Output	0	0	65535	1		UINT	Conf.
2.5.3.5	2457	Power Factor Output	0	0	65535	1		UINT	Conf.
2.5.3.6	2456	Absolute Active Power Output	0	0	65535	1		UINT	Conf.
2.5.3.7	2455	Active Power Output	0	0	65535	1		UINT	Conf.
2.5.3.8	2458	Active Power Output Max.	3000	-10000	10000	0,01	kW	REAL	Conf.
2.5.3.9	2459	Active Power Output Min.	-3000	-10000	10000	0,01	kW	REAL	Conf.
2.5.3.10	2454	DC-link Voltage Output	0	0	65535	1		UINT	Conf.
2.5.3.11	2460	DC-link Voltage Output Max.	120	100	150	1	%	REAL	Conf.
2.5.3.12	2461	DC-link Voltage Output Min.	0	0	100	1	%	REAL	Conf.
2.5.3.13	2462	Main Fan Speed Output	0	0	65535	1		UINT	Conf.
2.5.3.14	2463	Main Fan Speed Output Max.	10000	0	10000	1	rpm	REAL	Conf.
2.5.3.15	2464	Main Fan Speed Output Min.	0	0	10000	1	rpm	REAL	Conf.

6.6. Start and Stop settings.

6.6.1. Start Settings

Index	No.	Parameter	Def.	Min	Max	Form	Unit	Type	Handling
2.6.1.1	4718	Start Delay	0,1	0	10	0,1	s	REAL	Conf.
2.6.1.2	103	Run Enable Input	1	0	29999	1		UINT	Conf.
2.6.1.3	4728	Switch On Enable Input	10114	0	65535	1		UINT	Conf.
2.6.1.4	6791	Ramp Stop	0	0	65535	0,001	%/s	REAL	Conf.

6.6.2. Quick Stop

Index	No.	Parameter	Def.	Min	Max	Form	Unit	Type	Handling
2.6.2.1	212	Quick Stop Input	0	0	29999	1		UINT	Conf.
2.6.2.2	5104	Quick Stop Input 2	0	0	29999	1		UINT	Conf.
2.6.2.3	4587	Quick Stop Response	10	0	11	1		UINT	Conf.

6.6.3. Pre-Charge

Index	No.	Parameter	Def.	Min	Max	Form	Unit	Type	Handling
2.6.3.1	6563	Pre-Charge Request Output*	10102	0	65535	1		UINT	Conf.
2.6.3.2	6566	Pre-Charge Ready Level	80	60	120	0,01	%	REAL	Conf.
2.6.3.3	6567	Pre Charge Request Inp.	0115	0	65535	1		UINT	Conf.
2.6.3.4	6569	Pre-charge Allowed Output	0	0	65535	1		UINT	Conf.
2.6.3.5	5510	Pre-Charge Allowed Level	50	30		1	%	REAL	Conf.

*See chapter 3.7 iC7-Hybrid String PCS 300 kVA hardware parameters

6.6.4. Main Circuit Breaker

Index	No.	Parameter	Def.	Min	Max	Form	Unit	Type	Handling
2.6.4.1	6551	MCB Close Output	0105	0	65535	1		UINT	Conf.
2.6.4.2	6552	MCB Feedback Close Input	10116	0	65535	1		UINT	Conf.
2.6.4.3	6553	MCB Feedback Open Input	0	0	29999	1		UINT	Conf.
2.6.4.4	6554	MCB Tripped Input	0	0	29999	1		UINT	Conf.
2.6.4.5	6555	MCB Close Pulse Output*	0	0	65535	1		UINT	Conf.
2.6.4.6	6556	MCB Open Pulse Output*	0	0	29999	1		UINT	Conf.
2.6.4.7	6557	MCB Close Enable Input	1	0	29999	1		UINT	Conf.
2.6.4.8	6558	MCB Feedback Fault Delay	2	0	5	0,01	s	REAL	Conf.
2.6.4.9	6559	MCB Closing Mode	0	0	3	1		UINT	Conf.
2.6.4.10	6560	MCB Opening Mode	0	0	3	1		UINT	Conf.

*See chapter 3.7 iC7-Hybrid String PCS 300 kVA hardware parameters

6.6.5. LCL-Filter Energization

Index	No.	Parameter	Def.	Min	Max	Form	Unit	Type	Handling
2.6.5.1	5161	Filter Voltage Ramp Time	0.1	0	10000	0,01	s	REAL	Conf.
2.6.5.2	5162	Max. Filter Energization Time	10	0.1	50	0,1	s	REAL	Conf.

6.7. Control Places

6.7.1. Control Place Settings

Index	No.	Parameter	Def.	Min	Max	Form	Unit	Type	Handling
2.7.1.1	114	Control Place Selection	3	1	3	1		UINT	Conf.
2.7.1.2	4511	Force FB Control Input	0	0	29999	1		UINT	Conf.
2.7.1.3	4513	Force I/O Control Input	0	0	29999	1		UINT	Conf.
2.7.1.4	1972	Control Place Forcing Mode	0	0	3	1		UINT	Conf.
2.7.1.5	109	Control Place Independent Reset	0	0	1	1		BOOL	Conf.
2.7.1.6	4800	Control Place Release Mode	1	0	1	1		BOOL	Conf.
2.7.1.7	4732	Control Place Forcing Priority	1,3,2]	1	3	1		UINT	Conf.

6.7.2. Local Control

Index	No.	Parameter	Def.	Min	Max	Form	Unit	Type	Handling
2.7.2.1	107	Local Control Mode	0	0	2	1		UINT	Conf.
2.7.2.2	108	Continue Operation in Local Control	0	0	1	1		BOOL	Conf.

6.7.3. I/O Control

Index	No.	Parameter	Def.	Min	Max	Form	Unit	Type	Handling
2.7.3.1	200	I/O Start Input	0	0	65535	1		UINT	Conf.
2.7.3.2	201	I/O Stop Input	0	0	65535	1		UINT	Conf.
2.7.3.3	203	I/O Reset Input	0	0	29999	1		UINT	Conf.
2.7.3.4	213	I/O Start Mode	0	0	2	1		UINT	Conf.
2.7.3.5	5111	Continue Operation in I/O Control	0	0	1	1		BOOL	Conf.

6.7.4. Fieldbus Control

Index	No.	Parameter	Def.	Min	Max	Form	Unit	Type	Handling
2.7.4.1	5112	Continue Operation in Fieldbus Control	0	0	1	1		BOOL	Conf.
2.7.4.2	5114	Fieldbus Start Mode	1	0	1	1		UINT	Conf.

6.8. Converter Control

6.8.1. Modulation

Index	No.	Parameter	Def.	Min	Max	Form	Unit	Type	Handling
2.8.1.1	2920	Switching Frequency	1000	-16777216	16777216	0,01	kHz	REAL	Conf. or Proc.
2.8.1.2	5093	Modulator Options	0	0	65535	1		WORD	Conf.
2.8.1.3	5100	Modulator Type	1	1	6	1		UDINT	Conf.
2.8.1.4	6518	Forward Voltage Compensation	100	0	1000	0,01	%	REAL	Conf.
2.8.1.5	353	Common Mode Voltage Softening Angle	7	0	60		°	REAL	Conf.

6.8.2. Advanced Grid Control

Index	No.	Parameter	Def.	Min	Max	Form	Unit	Type	Handling
2.8.2.1	2868	Active Current Kp	100	0	1000	0,01	%	REAL	Conf.
2.8.2.2	2869	Active Current Ti	100	0	1000	0,01	%	REAL	Conf.
2.8.2.3	9659	Grid PLL Tc	0.1	0.01	1	0,01	s	REAL	Conf.
2.8.2.4	2871	Active Damping Kp	100	0	10000	0,01	%	REAL	Conf.
2.8.2.5	2849	Reactive Current Kp	100	0.001	1000	0,01	%	REAL	Conf.
2.8.2.6	2850	Reactive Current Ti	100	0	1000	0,01	%	REAL	Conf.
2.8.2.7	9658	Grid Control Options	0			1		WORD	Conf.
2.8.2.8	9655	Paralleling Sync. Run Kp	0.1	0	1000	0,01		REAL	Conf.
2.8.2.9	9656	Paralleling Sync. Stop Kp	0.4	0	1000	0,01		REAL	Conf.
2.8.2.10	9657	Paralleling Sync. Shift Kp	100	0	1000	0,01	%	REAL	Conf.
2.8.2.11	5098	Power Factor Sign Mode	0	0	1	1		UINT	Conf.
2.8.2.12	6510	Ac Voltage Control Kp	100	0	1000	0,01	%	REAL	Conf.
2.8.2.13	6511	Ac Voltage Control Ti	100	0	1000	0,01	%	REAL	Conf.
2.8.2.14	6512	PQ Mode Active Current Ctrl. Kp	7	0	10000	0,01	Hz	REAL	Conf.
2.8.2.15	6513	PQ Mode Active Current Ctrl. Ti	0.02	0	100	0,01	s	REAL	Conf.
2.8.2.16	6514	PQ Mode Reactive Current Ctrl Ki	400	0	10000	0,01	%	REAL	Conf.
2.8.2.17	6515	Virtual Impedance	20	0	100	0,01	%	REAL	Conf.
2.8.2.18	6516	Virtual Impedance Tc	0.05	0	1	0,001	s	REAL	Conf.
2.8.2.19	6517	Virtual Impedance Filt. Tc	0.001	0	1	0,001	s	REAL	Conf.
2.8.2.20	6519	Harmonic Current Control Gain	0	0	1000	0,01	%	REAL	Conf.
2.8.2.21	2918	Short Term Current Options	0	0	65535	1		WORD	Conf.
2.8.2.22	6500	Neg. Seq. Current Control Kp	100	0	1000	0,01	%	REAL	Conf.
2.8.2.23	6501	Neg. Seq. Current Control Ti	100	0	10000	0,01	%	REAL	Conf.
2.8.2.24	6502	Neg. Seq. Voltage Control Kp	100	0	1000	0,01	%	REAL	Conf.
2.8.2.25	6503	Neg. Seq. Voltage Control Ti	100	0	10000	0,01	%	REAL	Conf.
2.8.2.26	4999	Harmonic Voltage Control Gain	100	0	1000	0,01	%	REAL	Conf.
2.8.2.32	665	AC Voltage Feed Forward Kp	100	0	100	0,01	%	REAL	Conf.
2.8.2.33	1020	AC Voltage High Limit	130	80	250	0,01	%	REAL	Conf.

6.8.3. Advanced DC-Link Control

Index	No.	Parameter	Def.	Min	Max	Form	Unit	Type	Handling
2.8.3.1	2902	DC-link Voltage Ctrl. Kp	100	0	1000	0,1	%	REAL	Conf.
2.8.3.2	2903	DC-link Voltage Ctrl. Ti	100	0	1000	0,01	%	REAL	Conf.
2.8.3.3	2907	DC-link Voltage Ctrl. Td	100	0	1000	0,01	%	REAL	Conf.
2.8.3.4	5095	DC-link Voltage Droop. Tc	0.05	0.0	1	0,01	s	REAL	Conf.
2.8.3.8	1803	Overvoltage Control Kp	100	0	10000	0,01	%	REAL	Conf.
2.8.3.9	1804	Overvoltage Control Ti	100	0	10000	0,01	%	REAL	Conf.
2.8.3.10	1805	Overvoltage Control Td	100	0	10000	0,01	%	REAL	Conf.
2.8.3.11	1806	Undervoltage Control Kp	100	0.001	10000	0,01	%	REAL	Conf. or Proc.
2.8.3.12	1807	Undervoltage Control Ti	100	0	10000	0,01	%	REAL	Conf. or Proc.
2.8.3.13	1808	Undervoltage Control Td	100	0	10000	0,01	%	REAL	Conf. or Proc.

6.8.1. Power Unit Settings

Index	No.	Parameter	Def.	Min	Max	Form	Unit	Type	Handling
2.8.4.1	2835	Power Unit Enable Mask	0	0		1		UDINT	Conf. or Proc.
2.8.4.2	6535	DC-link Voltage Measurement Corr. Gain	0	-1	1	0,01	%	REAL	Conf.
2.8.4.3	6534	DC-link Voltage Measurement Corr. Offset	0	-5	5	0,01	V	REAL	Conf.
2.8.4.4	2944	HF DC-link Filter Mode	0	0	1	1		UINT	Conf.

6.8.2. Cooling Fan Control

Index	No.	Parameter	Def.	Min	Max	Form	Unit	Type	Handling
2.8.5.1	2932	Main Fan Minimum Speed	0	0	100	0,1	%	REAL	Conf.

6.8.3. LCL-Filter

Index	No.	Parameter	Def.	Min	Max	Form	Unit	Type	Handling
2.8.6.1	2904	LCL Filter L1	0.000104	0	1	0,01	µH	REAL	Conf.
2.8.6.2	2905	LCL Filter Cf	0.0000825	0	1	0,01	µF	REAL	Conf.
2.8.6.3	2906	LCL Filter L2	0.000040	0	1	0,01	µH	REAL	Conf.

6.9. Protection and responses

6.9.1. General settings

Index	No.	Parameter	Def.	Min	Max	Form	Unit	Type	Handling
2.9.1.1	2927	Retry after Fault	1	0	1	1		BOOL	Conf.
2.9.1.2	5131	Active Current Limit Warn. Preset	0	0	300	%		REAL	Conf.
2.9.1.3	5130	Active Current Limit Warn. Ramp Rate	100	-1	10000	%/s		REAL	Conf.

6.9.2. Misc. Responses

Index	No.	Parameter	Def.	Min	Max	Form	Unit	Type	Handling
2.9.2.1	2929	DC-link Voltage Ripple Response	1	0	2	1		UDINT	Conf.
2.9.2.2	2941	LCL Fan Fail Response	10	0	11	1		UINT	Conf.

6.9.3. External Event

Index	No.	Parameter	Def.	Min	Max	Form	Unit	Type	Handling
2.9.3.1	4557	External Event 1 Input	0	0	29999	1		UINT	Conf.
2.9.3.2	4559	External Event 1 Response	10	0	11	1		UINT	Conf.
2.9.3.3	4560	External Event 2 Input	0	0	29999	1		UINT	Conf.
2.9.3.4	4562	External Event 2 Response	10	0	11	1		UINT	Conf.
2.9.3.5	5779	External DC Earth Fault Input	0	0	29999	1		UINT	Conf.
2.9.3.6	5780	External DC Earth Fault Response	10	0	11	1		UINT	Conf.

6.9.4. Cooling Monitor

Index	No.	Parameter	Def.	Min	Max	Form	Unit	Type	Handling
2.9.4.1	2400	Cooling Monitor Input	1	0	29999	1		UINT	Conf.
2.9.4.2	2401	Cooling Monitor Fault Delay	10	0	300	0,01	s	REAL	Conf.
2.9.4.3	2402	Cooling Monitor Response	0	0	3	1		UINT	Conf.

6.9.5. Measured temperature protection

6.9.5.1.Temp 1 Protection

Index	No.	Parameter	Def.	Min	Max	Form	Unit	Type	Handling
2.9.5.1.1	5206	Temp. 1 Input	0		29999	1		UINT	Conf.
2.9.5.1.2	5207	Temp. 1 Limit 1	120	-300	300	0,01	°C	REAL	Conf.
2.9.5.1.3	5208	Temp. 1 Limit 2	150	-300	300	0,01	°C	REAL	Conf.
2.9.5.1.4	5209	Temp. 1 Limit 2 Response	11	3	11	1		UINT	Conf.

6.9.5.1.Temp 2 Protection

Index	No.	Parameter	Def.	Min	Max	Form	Unit	Type	Handling
2.9.5.2.1	5210	Temp. 2 Input	0	0	29999	1		UINT	Conf.
2.9.5.2.2	5211	Temp. 2 Limit 1	120	-300	300	0,01	°C	REAL	Conf.
2.9.5.2.3	5212	Temp. 2 Limit 2	150	-300	300	0,01	°C	REAL	Conf.
2.9.5.2.4	5213	Temp. 2 Limit 2 Response	11	3	11	1		UINT	Conf.

6.9.5.1.Temp 3 Protection

Index	No.	Parameter	Def.	Min	Max	Form	Unit	Type	Handling
2.9.5.3.1	5214	Temp. 3 Input	0	0	29999	1		UINT	Conf.
2.9.5.3.2	5215	Temp. 3 Limit 1	120	-300	300	0,01	°C	REAL	Conf.
2.9.5.3.3	5216	Temp. 3 Limit 2	150	-300	300	0,01	°C	REAL	Conf.
2.9.5.3.4	5217	Temp. 3 Limit 2 Response	11	3	11	1		UINT	Conf.

6.9.5.1.Temp 4 Protection

Index	No.	Parameter	Def.	Min	Max	Form	Unit	Type	Handling
2.9.5.4.1	5218	Temp. 4 Input	0	0	29999	1		UINT	Conf.
2.9.5.4.2	5219	Temp. 4 Limit 1	120	-300	300	0,01	°C	REAL	Conf.
2.9.5.4.3	5220	Temp. 4 Limit 2	150	-300	300	0,01	°C	REAL	Conf.
2.9.5.4.4	5221	Temp. 4 Limit 2 Response	11	3	11	1		UINT	Conf.

6.9.5.1.Temp 5 Protection

Index	No.	Parameter	Def.	Min	Max	Form	Unit	Type	Handling
2.9.5.5.1	5222	Temp. 5 Input	0	0	29999	1		UINT	Conf.
2.9.5.5.2	5223	Temp. 5 Limit 1	120	-300	300	0,01	°C	REAL	Conf.
2.9.5.5.3	5224	Temp. 5 Limit 2	150	-300	300	0,01	°C	REAL	Conf.
2.9.5.5.4	5225	Temp. 5 Limit 2 Response	11	3	11	1		UINT	Conf.

6.9.5.1.Temp 6 Protection

Index	No.	Parameter	Def.	Min	Max	Form	Unit	Type	Handling
2.9.5.6.1	5226	Temp. 6 Input	0	0	29999	1		UINT	Conf.
2.9.5.6.2	5227	Temp. 6 Limit 1	120	-300	300	0,01	°C	REAL	Conf.
2.9.5.6.3	5228	Temp. 6 Limit 2	150	-300	300	0,01	°C	REAL	Conf.
2.9.5.6.4	5229	Temp. 6 Limit 2 Response	11	3	11	1		UINT	Conf.

6.9.5.1.Temp 7 Protection

Index	No.	Parameter	Def.	Min	Max	Form	Unit	Type	Handling
2.9.5.7.1	5239	Temp. 7 Input	0	0	29999	1		UINT	Conf.
2.9.5.7.2	5243	Temp. 7 Limit 1	120	-300	300	0,01	°C	REAL	Conf.
2.9.5.7.3	5269	Temp. 7 Limit 2	150	-300	300	0,01	°C	REAL	Conf.
2.9.5.7.4	5235	Temp. 7 Limit 2 Response	11	3	11	1		UINT	Conf.

6.9.5.1.Temp 8 Protection

Index	No.	Parameter	Def.	Min	Max	Form	Unit	Type	Handling
2.9.5.8.1	5240	Temp. 8 Input	0	0	29999	1		UINT	Conf.
2.9.5.8.2	5247	Temp. 8 Limit 1	120	-300	300	0,01	°C	REAL	Conf.
2.9.5.8.3	5270	Temp. 8 Limit 2	150	-300	300	0,01	°C	REAL	Conf.
2.9.5.8.4	5236	Temp. 8 Limit 2 Response	11	3	11	1		UINT	Conf.

6.9.5.1.Temp 9 Protection

Index	No.	Parameter	Def.	Min	Max	Form	Unit	Type	Handling
2.9.5.9.1	5241	Temp. 9 Input	0	0	29999	1		UINT	Conf.
2.9.5.9.2	5249	Temp. 9 Limit 1	120	-300	300	0,01	°C	REAL	Conf.
2.9.5.9.3	5271	Temp. 9 Limit 2	150	-300	300	0,01	°C	REAL	Conf.
2.9.5.9.4	5237	Temp. 9 Limit 2 Response	11	3	11	1		UINT	Conf.

6.9.5.1.Temp 10 Protection

Index	No.	Parameter	Def.	Min	Max	Form	Unit	Type	Handling
2.9.5.10.1	5242	Temp. 10 Input	0	0	29999	1		UINT	Conf.
2.9.5.10.2	5268	Temp. 10 Limit 1	120	-300	300	0,01	°C	REAL	Conf.
2.9.5.10.3	5272	Temp. 10 Limit 2	150	-300	300	0,01	°C	REAL	Conf.
2.9.5.10.4	5238	Temp. 10 Limit 2 Response	11	3	11	1		UINT	Conf.

6.9.5.1. Common

Index	No.	Parameter	Def.	Min	Max	Form	Unit	Type	Handling
2.9.5.11.1	5230	Meas. Valid Range	[200, -50]	-300	300	0,01	°C	REAL	Conf.
2.9.5.11.2	5231	Meas. Out of Range Response	3	0	11	1		UINT	Conf.
2.9.5.11.3	164	Enable option card external temperature measurement	0	0	1	1		BOOL	Conf.

6.9.6. Thermistor monitoring

Index	No.	Parameter	Def.	Min	Max	Form	Unit	Type	Handling
2.9.6.1	5232	Thermistor Monitoring Response	10	0	11	1		UINT	Conf.
2.9.6.2	1520	Thermistor Monitor 1 Input	0	0	29999	1		UINT	Conf.
2.9.6.3	1522	Thermistor Monitor 2 Input	0	0	29999	1		UINT	Conf.
2.9.6.4	1524	Thermistor Monitor 3 Input	0	0	29999	1		UINT	Conf.

6.9.7. Live Zero

Index	No.	Parameter	Def.	Min	Max	Form	Unit	Type	Handling
2.9.7.1	4554	Live Zero Response	3	0	11	1		UINT	Conf.

6.9.8. Fieldbus protection

Index	No.	Parameter	Def.	Min	Max	Form	Unit	Type	Handling
2.9.8.1	1304	Fieldbus Fault Response	10	0	11	1		UINT	Conf.
2.9.8.2	1305	No Fieldbus Connection Response	0	0	11	1		UINT	Conf.
2.9.8.3	1306	Process Data Timeout Response	1	1	11	1		UINT	Conf.
2.9.8.4	1340	Process Data Timeout Delay	1000	50		0,01	s	REAL	Conf.
2.9.8.5	5244	Fieldbus Watchdog Response	3	0	11	1		UINT	Conf.
2.9.8.6	5245	Fieldbus Watchdog Delay	5	0	3000	0,01	s	REAL	Conf.
2.9.8.7	5246	Fieldbus Watchdog Start Delay	30	0	3000	0,01	s	REAL	Conf.

6.9.9. HMI Connection Loss

Index	No.	Parameter	Def.	Min	Max	Form	Unit	Type	Handling
2.9.9.1	5420	HMI Connection Loss	10	0	11	1		UINT	Conf.

6.9.10. Cooling Fan Supervision

Index	No.	Parameter	Def.	Min	Max	Form	Unit	Type	Handling
2.9.10.1	2939	Main Fan Fail Response	3	0	11	1		UINT	Conf.
2.9.10.2	2940	Internal Fan Fail Response	3	0	11	1		UINT	Conf.

6.9.11. Limit Supervision

Index	No.	Parameter	Def.	Min	Max	Form	Unit	Type	Handling
2.9.11.1	1990	Limit Supervision 1 Sel.	0	0	3	1		UINT	Conf.
2.9.11.2	5252	Limit Supervision 1 Type	0	0	2	1		UDINT	Conf.
2.9.11.3	5253	Limit Supervision 1 Threshold	0	-300	350	0,1	%	REAL	Conf.
2.9.11.4	4098	Limit Supervision 1 Enable	0	0	3	1		UINT	Conf.

6.9.12. Grid Frequency Supervision

Index	No.	Parameter	Def.	Min	Max	Form	Unit	Type	Handling
2.9.12.1	2840	High Freq. Instant Fault Limit	75	0	200	0,1	Hz	REAL	Conf.
2.9.12.2	255	High Freq. Delayed Fault Limit	75	0	200	0,01	Hz	REAL	Conf.
2.9.12.3	257	High Freq. Warning Limit	75	0	200	0,01	Hz	REAL	Conf.
2.9.12.4	259	Low Freq. Warning Limit	25	0	200	0,01	Hz	REAL	Conf.
2.9.12.5	258	Low Freq. Delayed Fault Limit	25	0	200	0,01	Hz	REAL	Conf.
2.9.12.6	2841	Low Freq. Instant Fault Limit	25	0	200	0,1	Hz	REAL	Conf.
2.9.12.7	256	Freq. Supervision Hysteresis	0.5	0	5	0,01	Hz	REAL	Conf.
2.9.12.8	260	High Freq. Fault Delay	0.2	0	10	0,01	s	REAL	Conf.
2.9.12.9	261	Low Freq. Fault Delay	0,2	0	10	0,01	s	REAL	Conf.

6.9.13. Grid Voltage Supervision

Index	No.	Parameter	Def.	Min	Max	Form	Unit	Type	Handling
2.9.13.1	2842	Grid Overvoltage Instant Fault Limit	140	0	200	0,1	%	REAL	Conf.
2.9.13.2	250	Grid Overvoltage Delayed Fault Limit	140	0	200	0,01	%	REAL	Conf.
2.9.13.3	252	Grid Overvoltage Warning Limit	140	0	200	0,01	%	REAL	Conf.
2.9.13.4	253	Grid Undervoltage Warning Limit	0	0	200	0,01	%	REAL	Conf.
2.9.13.5	262	Grid Undervoltage Delayed Fault Limit	0	0	200	0,01	%	REAL	Conf.
2.9.13.6	2843	Grid Undervoltage Instant Fault Limit	0	0	200	0,1	%	REAL	Conf.
2.9.13.7	251	Grid Volt. Supervision Hysteresis	1	0	10	0,01	%	REAL	Conf.
2.9.13.8	254	Grid Overvoltage Fault Delay	0,5	0	10	0,01	s	REAL	Conf.
2.9.13.9	263	Grid Undervoltage Fault Delay	0,5	0	10	0,01	s	REAL	Conf.

6.9.14. Missing Grid Phase

Index	No.	Parameter	Def.	Min	Max	Form	Unit	Type	Handling
2.9.14.1	266	Phase Fault Limit Run	10	0	100	0,01	%	REAL	Conf.
2.9.14.2	264	Phase Fault Limit Stop	60	0	100	0,01	%	REAL	Conf.
2.9.14.3	265	Phase Fault Delay	0.1	0	100	0,01	s	REAL	Conf.

6.9.15. Pre-Charge Monitoring

Index	No.	Parameter	Def.	Min	Max	Form	Unit	Type	Handling
2.9.15.1	6564	Max. Pre-Charge Time	20	0	50	0,01	s	REAL	Conf.
2.9.15.2	6565	Min. Pre-Charge Time	0.5	0	5	0,01	s	REAL	Conf.
2.9.15.3	6568	Ext. Pre-Charge Monitor Response	0	0	11	1		UINT	Conf.

6.9.16. Surge Protection

Index	No.	Parameter	Def.	Min	Max	Form	Unit	Type	Handling
2.9.16.1	127	AC Surge Prot. Device Input	T18	0	29999	1		UINT	Conf.
2.9.16.2	128	DC Surge Prot. Device Input	T15	0	29999	1		UINT	Conf.

6.10. External Grid Synchronization

Index	No.	Parameter	Def.	Min	Max	Form	Unit	Type	Handling
2.10.1	6595	Ext. Grid Synchronize Input	0	0	29999	1		UINT	Conf.
2.10.2	6598	Ext. Grid Connect Enable Input	1	0	29999	1		UINT	Conf.
2.10.3	6596	Ext. Grid Connect Input	0	0	29999	1		UINT	Conf.
2.10.4	6597	Ext. Grid Connected Feedback Input	0	0	29999	1		UINT	Conf.
2.10.5	6599	Ext. Grid Synchronized Output	0	0	29999	1		UINT	Conf.
2.10.6	6600	Ext. Grid Connect Output	0	0	29999	1		UINT	Conf.
2.10.7	6604	Ext. Grid Connected Feedback Delay	2.0	0.0	10.0	0,1		REAL	Conf.
2.10.8	6602	Ext. Grid Connected Response	1	-32768	2	1		INT	Conf.
2.10.9	6603	Ext. Grid Control Mode	4	-32768	6	1		INT	Conf.
2.10.10	6605	Ext. Grid Voltage Feedback Source	0	0	2	1		UINT	Conf.

6.11. Grid Code parameters.

6.11.1. General Settings

Index	No.	Parameter	Def.	Min	Max	Form	Unit	Type	Handling
2.11.1.1	5593	Grid Code Activation	Disabled	0	1	1		INT	Conf.
2.11.1.2	5785	Grid Code Settings Selection	0	0	2	1		UINT	Conf.
2.11.1.3	5786	Grid Code Region Selection	0	0	4	1		UINT	Conf.
2.11.1.4	5699	Frequency Trips	Disabled	0	1	1		BOOL	Conf.
2.11.1.5	5700	Voltage Trips	Disabled	0	1	1		BOOL	Conf.
2.11.1.6	5791	Mean Voltage Trip	Disabled	0	1	1		BOOL	Conf.
2.11.1.7	5727	Anti-Islanding Function	Disabled	0	1	1		BOOL	Conf.
2.11.1.8	5701	Rate of Change of Frequency	Disabled	0	1	1		BOOL	Conf.
2.11.1.9	5664	Q(U) Reactive power function	Disabled	0	1	1		BOOL	Conf.
2.11.1.10	5666	Power Factor	Disabled	0	1	1		BOOL	Conf.
2.11.1.11	5665	Q(P) Reactive power curve	Disabled	0	1	1		BOOL	Conf.
2.11.1.12	5721	Q(U) Reactive Power Curve	Disabled	0	1	1		BOOL	Conf.
2.11.1.13	5667	Dynamic Support	Disabled	0	1	1		BOOL	Conf.
2.11.1.14	5668	Frequency Sensitive Mode	Disabled	0	1	1		BOOL	Conf.
2.11.1.15	5669	High Frequency Power Reference	Disabled	0	1	1		BOOL	Conf.
2.11.1.16	5670	Low Frequency Power Reference	Disabled	0	1	1		BOOL	Conf.
2.11.1.17	5765	Low Frequency Power Reference 2	Disabled	0	1	1		BOOL	Conf.
2.11.1.18	5773	High Frequency Power Reference 2	Disabled	0	1	1		BOOL	Conf.
2.11.1.19	5682	High Voltage Power Limit	Disabled	0	1	1		BOOL	Conf.
2.11.1.20	5746	High Voltage Power Limit 2	Disabled	0	1	1		BOOL	Conf.
2.11.1.21	5760	Low Voltage Power Limit 2	Disabled	0	1	1		BOOL	Conf.

6.11.2. Disconnection

6.11.2.1. Frequency Trips

Index	No.	Parameter	Def.	Min	Max	Form	Unit	Type	Handling
2.11.2.1.1	5569	Grid Frequency High Trip 1 Limit	0	0	200	0,01	%	REAL	Conf.
2.11.2.1.2	5570	Grid Frequency High Trip 1 Delay	0	0	1200	0,001	s	DINT	Conf.
2.11.2.1.3	5571	Grid Frequency High Trip 2 Limit	0	0	200	0,01	%	REAL	Conf.
2.11.2.1.4	5560	Grid Frequency High Trip 2 Delay	0	0	1200	0,001	s	DINT	Conf.
2.11.2.1.5	5561	Grid Frequency High Trip 3 Limit	0	0	200	0,01	%	REAL	Conf.
2.11.2.1.6	5562	Grid Frequency High Trip 3 Delay	0	0	1200	0,001	s	DINT	Conf.
2.11.2.1.7	5563	Grid Frequency Low Trip 1 Limit	0	0	200	0,01	%	REAL	Conf.
2.11.2.1.8	5564	Grid Frequency Low Trip 1 Delay	0	0	1200	0,001	s	DINT	Conf.
2.11.2.1.9	5565	Grid Frequency Low Trip 2 Limit	0	0	200	0,01	%	REAL	Conf.
2.11.2.1.10	5566	Grid Frequency Low Trip 2 Delay	0	0	1200	0,001	s	DINT	Conf.
2.11.2.1.11	5567	Grid Frequency Low Trip 3 Limit	0	0	200	0,01	%	REAL	Conf.
2.11.2.1.12	5568	Grid Frequency Low Trip 3 Delay	0	0	1200	0,001	s	DINT	Conf.
2.11.2.1.13	5693	Narrow Frequency Band Enable DigIn	0	0	29999	1		UINT	Conf.
2.11.2.1.14	5696	Narrow Frequency Low Trip Limit	0	0	200	0.01	%	REAL	Conf.
2.11.2.1.15	5697	Narrow Frequency High Trip Limit	0	0	200	0.01	%	REAL	Conf.
2.11.2.1.16	5698	Narrow Frequency Trip Limit Delay	0	0	1200	0.001	s	REAL	Conf.

6.11.2.2. Voltage Trips

Index	No.	Parameter	Def.	Min	Max	Form	Unit	Type	Handling
2.11.2.2.1	5573	Grid Voltage High Trip 1 Limit	0	0	200	0,01	%	REAL	Conf.
2.11.2.2.2	5574	Grid Voltage High Trip 1 Delay	0	0	1200000	0,001	s	REAL	Conf.
2.11.2.2.3	5575	Grid Voltage High Trip 2 Limit	0	0	200	0,01	%	REAL	Conf.
2.11.2.2.4	5576	Grid Voltage High Trip 2 Delay	0	0	1200000	0,001	s	REAL	Conf.
2.11.2.2.5	5577	Grid Voltage High Trip 3 Limit	0	0	200	0,01	%	REAL	Conf.
2.11.2.2.6	5578	Grid Voltage High Trip 3 Delay	0	0	1200000	0,001	s	REAL	Conf.
2.11.2.2.7	5579	Grid Voltage Low Trip 1 Limit	0	0	200	0,01	%	REAL	Conf.
2.11.2.2.8	5580	Grid Voltage Low Trip 1 Delay	0	0	1200000	0,001	s	REAL	Conf.
2.11.2.2.9	5581	Grid Voltage Low Trip 2 Limit	0	0	200	0,01	%	REAL	Conf.
2.11.2.2.10	5582	Grid Voltage Low Trip 2 Delay	0	0	1200000	0,001	s	REAL	Conf.
2.11.2.2.11	5583	Grid Voltage Low Trip 3 Limit	0	0	200	0,01	%	REAL	Conf.
2.11.2.2.12	5584	Grid Voltage Low Trip 3 Delay	0	0	1200000	0,001	s	REAL	Conf.
2.11.2.2.13	5585	Grid Voltage Low Trip 4 Limit	0	0	200	0,01	%	REAL	Conf.
2.11.2.2.14	5586	Grid Voltage Low Trip 4 Delay	0	0	120000	0,001	s	REAL	Conf.
2.11.2.2.15	5686	Grid Voltage High Mean Trip Limit	0	0	200	0,01	%	REAL	Conf.
2.11.2.2.16	5709	Grid Voltage Positive Sequence Low Trip Limit	0	0	200	0,01	%	REAL	Conf.
2.11.2.2.17	5710	Grid Voltage Positive Sequence Low Trip Delay	0	0	1200	0,001	s	REAL	Conf.
2.11.2.2.18	5711	Grid Voltage Negative Sequence Trip Limit	0	0	200	0,01	%	REAL	Conf.
2.11.2.2.19	5712	Grid Voltage Negative Sequence Trip Delay	0	0	1200	0,001	s	REAL	Conf.

6.11.2.3. Anti-Islanding

Index	No.	Parameter	Def.	Min	Max	Form	Unit	Type	Handling
2.11.2.3.1	5623	Anti-Islanding Mode	0	0	1	1		UINT	Conf.
2.11.2.3.2	5624	Anti-Islanding Kp	100	0	10000	0,01	%	REAL	Conf.
2.11.2.3.3	5733	Anti-Islanding RoCoF Trip Limit	2,5	0	10	0,01	Hz/s		Conf.
2.11.2.3.4	5796	Anti-Islanding RoCoF Trip Delay	0	0	5	0,001	s	REAL	Conf.
2.11.2.3.5	5728	Anti-Islanding Voltage High Trip Limit	127.00	0	200	2	%	REAL	Conf.
2.11.2.3.6	5729	Anti-Islanding Voltage Low Trip Limit	0.00	0	200	2	%	REAL	Conf.
2.11.2.3.7	5730	Anti-Islanding Frequency High Trip Limit	105.00	0	200	2	%	REAL	Conf.
2.11.2.3.8	5731	Anti-Islanding Frequency Low Trip Limit	93.00	0	200	2	%	REAL	Conf.
2.11.2.3.9	5732	Anti-Islanding U & F Trip Delay	0.050	0	5	3	s	REAL	Conf.

6.11.2.4. Rate of Change of Frequency

Index	No.	Parameter	Def.	Min	Max	Form	Unit	Type	Handling
2.11.2.4.1	5663	RoCoF Trip Limit	0	0	10	0,01	Hz/s	REAL	Conf.
2.11.2.4.2	5793	RoCoF Trip Limit 1 Delay	0	0	5	0,001	s	REAL	Conf.
2.11.2.4.3	5794	RoCoF Trip Limit 2	0	0	10	0,01	Hz/s	REAL	Conf.
2.11.2.4.4	5795	RoCoF Trip Limit 2 Delay	0	0	5	0,001	s	REAL	Conf.

6.11.2.5. External Trips

Index	No.	Parameter	Def.	Min	Max	Form	Unit	Type	Handling
2.11.2.5.1	5694	External Grid Code Trip DigIn 1	0	0	29999	1		UINT	Conf.
2.11.2.5.2	5695	External Grid Code Trip DigIn 2	0	0	29999	1		UINT	Conf.

6.11.3. Connection and Reconnection

6.11.3.1. Connection

Index	No.	Parameter	Def.	Min	Max	Form	Unit	Type	Handling
2.11.3.1.1	5708	Connection Time	1,1	1,1	1000	0,001	S	REAL	Conf.
2.11.3.1.2	5715	Connection Ramp Rate	-1	-1	1000	0,001	%/s	REAL	Conf.
2.11.3.1.3	5704	Connection Line Frequency High Limit	0	0	200	0,01	%	REAL	Conf.
2.11.3.1.4	5705	Connection Line Frequency Low Limit	0	0	200	0,01	%	REAL	Conf.
2.11.3.1.5	5706	Connection Line Voltage High Limit	0	0	200	0,01	%	REAL	Conf.
2.11.3.1.6	5707	Connection Line Voltage Low Limit	0	0	200	0,01	%	REAL	Conf.

6.11.3.1. Reconnection

Index	No.	Parameter	Def.	Min	Max	Form	Unit	Type	Handling
2.11.3.2.1	5588	Reconnection time	1,100	1,100	1000	0,001	s	REAL	Conf.
2.11.3.2.2	5635	Reconnection Power Increase Rate Limit	25	-1	1000	0,001	%/s	REAL	Conf.
2.11.3.2.3	5589	Line Frequency High OK Limit	101	0	150	0,01	%	REAL	Conf.
2.11.3.2.4	5590	Line Frequency Low OK Limit	99	0	150	0,01	%	REAL	Conf.
2.11.3.2.5	5591	Line Voltage High OK Limit	105	0	150	0,01	%	REAL	Conf.
2.11.3.2.6	5592	Line Voltage Low OK Limit	95	0	150	0,01	%	REAL	Conf.

6.11.4. Reactive Power Functions

6.11.4.1. General Settings

Index	No.	Parameter	Def.	Min	Max	Form	Unit	Type	Handling
2.11.4.1.1	5703	Reactive Limiting At Mindex Limit	0	0	1	1		INT	Conf.
2.11.4.1.2	5726	Constant Reactive Power Ref.	0	-200	200	0,01	%	REAL	Conf.
2.11.4.1.3	5743	Reactive Ref. Q Lock-in Voltage	0	0	200	0,01	%	REAL	Conf.
2.11.4.1.4	5744	Reactive Ref. Q Lock-out Voltage	0	0	2200	0,01	%	REAL	Conf.
2.11.4.1.5	5790	Reactive Power Priority	0	0	2	1		UINT	Conf.

6.11.4.2. Q(U) Reactive Power Function

Index	No.	Parameter	Def.	Min	Max	Form	Unit	Type	Handling
2.11.4.2.1	5610	High Voltage Slope Start	100	0	200	0,01	%	REAL	Conf.
2.11.4.2.2	5609	High Voltage Maximum Reactive	33	-170	170	0,01	%	REAL	Conf.
2.11.4.2.3	5608	High Voltage Reactive Slope	0	-30	30	3	%/%	REAL	Conf.
2.11.4.2.4	5611	Low Voltage Slope Start	100	0	200	0,01	%	REAL	Conf.
2.11.4.2.5	5612	Low Voltage Maximum Reactive	33	-170	170	0,01	%	REAL	Conf.
2.11.4.2.6	5613	Low Voltage Reactive Slope	0	-30	30	3	%/%	REAL	Conf.
2.11.4.2.7	5616	Zero Reactive Voltage Offset	0,00	-20,00	20,00	0,01	%	REAL	Conf
2.11.4.2.8	5629	Voltage Dead Band for Reactive Power	0,00	0,00	5,00	0,01	%	REAL	Conf.
2.11.4.2.9	5628	Reactive Power Displacement	0	-100,00	100,00	0,01	%	REAL	Conf.
2.11.4.2.10	5671	Q(U) Reactive Power Filter Tc	0	0	120	0,001	s	REAL	Conf.
2.11.4.2.11	5677	Q(U) Power Lock In Level	0	0	200	0,01	%	REAL	Conf.
2.11.4.2.12	5678	Q(U) Power Lock Out Level	0	0	200	0,01	%	REAL	Conf.
2.11.4.2.13	5679	Q(U) Power Factor Limit	0	-1	1	0,001		REAL	Conf.

6.11.4.3. Power Factor

Index	No.	Parameter	Def.	Min	Max	Form	Unit	Type	Handling
2.11.4.3.1	5630	Power Factor Reference	1	-1	1	0,0001		REAL	Conf.
2.11.4.3.2	5550	Power Factor Reference Mode	0	0	2	1		INT	Conf.
2.11.4.3.3	5551	Power Factor Lock In Voltage	105	-150	150	0,01	%	REAL	Conf.
2.11.4.3.4	5552	Power Factor Lock Out Voltage	102	-150	150	0,01	%	REAL	Conf.
2.11.4.3.5	5607	Power Factor Reference Filter Tc	0	0	120	0,001	s	REAL	Conf.
2.11.4.3.6	5675	CosPhi(P) Curve Power points (X)	0	-200	200	0,01	%	REAL ARRAY 10	Conf.
2.11.4.3.7	5676	CosPhi(P) Curve Power Factor Points (Y)	-1	-1	1	0,001		REAL ARRAY 10	Conf.

6.11.4.4. Q(P) Reactive Power Function

Index	No.	Parameter	Def.	Min	Max	Form	Unit	Type	Handling
2.11.4.4.1	5614	Q(P) Functions Power points (X)	0,0	-170	170	0,01	%	REAL	Conf.
2.11.4.4.2	5615	Q(P) Functions Reactive points (Y)	0,0	-170	170	0,01	%	REAL	Conf.
2.11.4.4.3	5672	Q(P) Reactive Power Filter Tc	0	0	120	0,001	s	REAL	Conf.
2.11.4.4.4	5673	Q(P) Curve Lock In Voltage	0	0	200	0,01	%	REAL	Conf.
2.11.4.4.5	5674	Q(P) Curve Lock Out Voltage	0	0	200	0,01	%	REAL	Conf.

6.11.4.1. Q(U) Reactive Power Curve

Index	No.	Parameter	Def.	Min	Max	Form	Unit	Type	Handling
2.11.4.5.1	5719	Q(U) Curve Voltage Points (X)	0	0	200	0,01	%	REAL ARRAY 10	Conf.
2.11.4.5.2	5720	Q(U) Curve Reactive Points (Y)	0	-170	170	0,01	%	REAL ARRAY 10	Conf.
2.11.4.5.3	5722	Q(U) Reactive Curve Filter Tc	0	0	90	0,001	s	REAL	Conf.
2.11.4.5.4	5723	Q(U) Reactive Power Curve Voltage Adjustment Tc	0	0	6000	0,001	s	REAL	Conf.
2.11.4.5.5	5724	Q(U) Curve Voltage Offset Adjustment	0	0	1	1		REAL	Conf.
2.11.4.5.6	5725	Q(U) Curve Voltage Offset	0	-150	150	0,01	%	REAL	Conf.

6.11.5. Reactive Current Functions

6.11.5.1. General Settings

Index	No.	Parameter	Def.	Min	Max	Form	Unit	Type	Handling
2.11.5.1.1	5658	Forced Active Power Feed During FRT	Disabled	0	1	1		INT	Conf.
2.11.5.1.2	5713	Dynamic Grid Support Mode	0	0	1	1		UINT	Conf.
2.11.5.1.3	5782	Dynamic Grid Support Type	0	0	1	1		UINT	Conf,

6.11.5.2. Dynamic Grid Support

Index	No.	Parameter	Def.	Min	Max	Form	Unit	Type	Handling
2.11.5.2.1	5648	High Start Voltage	0	0	200	0,02	%	REAL	Conf.
2.11.5.2.2	5649	Low Start Voltage	0	0	200	0,02	%	REAL	Conf.
2.11.5.2.3	5650	Positive Sequence Reactive Slope	0	0	10	0,02	%/%	REAL	Conf.
2.11.5.2.4	5651	Negative Sequence Reactive Slope	0	0	10	0,02	%/%	REAL	Conf.
2.11.5.2.5	5652	Slopes Maximum Reactive	33	0	200	0,1	%	REAL	Conf.
2.11.5.2.6	5653	Reset Hysteresis	1,5	0	10	0,02	%	REAL	Conf.
2.11.5.2.7	5655	Positive Sequence Trigger Limit	0	0	100	0,02	%	REAL	Conf.
2.11.5.2.8	5654	Negative Sequence Trigger Limit	0	0	100	0,02	%	REAL	Conf.
2.11.5.2.9	5656	Positive/Negative Sequence Control Off Delay	5,000	0	60,000	0,001	s	REAL	Conf.
2.11.5.2.10	5657	Negative Sequence Control Mode	1	0	2	1		UINT	Conf.
2.11.5.2.11	5783	Dynamic Grid Support Low Slope Start	100	0	150	0,01	%	REAL	Conf.
2.11.5.2.12	5784	Dynamic Grid Support High Slope Start	100	0	150	0,01	%	REAL	Conf.

6.11.6. Active Power control

6.11.6.1. General Settings

Index	No.	Parameter	Def.	Min	Max	Form	Unit	Type	Handling
2.11.6.1.1	5634	Power Increase Rate Limit	50	-1	1000	0,001	%/s	REAL	Conf.
2.11.6.1.2	5789	Power Decrease Rate Limit	50	-1	1000	0,001	%/s	REAL	Conf.

6.11.6.2. Frequency Sensitive Mode

Index	No.	Parameter	Def.	Min	Max	Form	Unit	Type	Handling
2.11.6.2.1	5637	FSM Power Slope	0,00	0,00	200,00	2	%/%	REAL	Conf.
2.11.6.2.2	5636	FSM Dead Zone	0,000	0,00	10,000	3	%	REAL	Conf.
2.11.6.2.3	5638	FSM Maximum Power Change	8,00	0,00	300,00	2	%	REAL	Conf.
2.11.6.2.4	5645	FSM Force to Power Ref, Mode	0	0	1	1		BOOL	Conf.
2.11.6.2.5	5646	FSM Freeze Power	0	0	1	1		BOOL	Conf.
2.11.6.2.6	5647	FSM High Frequency Slope Reference	1	0	3	1		INT	Conf.

6.11.6.3. P(f) High Frequency Active Power Reference

Index	No.	Parameter	Def.	Min	Max	Form	Unit	Type	Handling
2.11.6.3.1	5619	High Frequency Slope Start	101	0	200	0,01	%	REAL	Conf.
2.11.6.3.2	5617	High Frequency Power Slope	5	-30	30	0,001	%/%	REAL	Conf.
2.11.6.3.3	5639	High Frequency Power Release Ramp	-1	-1	200	0,001	%/s	REAL	Conf.
2.11.6.3.4	5640	High Frequency Log Off frequency	-1	-1	200	0,01	%	REAL	Conf.
2.11.6.3.5	5643	High Frequency Freeze Power	1	0	1	1		BOOL	Conf.
2.11.6.3.6	5659	High Frequency Slope Reference	0	0	1	1		INT	Conf.
2.11.6.3.7	5683	High Frequency Start Delay	0	0	30	0,001	s	REAL	Conf.
2.11.6.3.8	5685	High Frequency Power Release Delay	0	0	600	0,001	s	REAL	Conf.
2.11.6.3.9	5797	HFPR Power Filter Time Constant	0,000	0	10	0,001	S	REAL	Conf.
2.11.6.3.10	5798	HFPR Ramp-Up Rate	100	-1	10000	0,01	%/s	REAL	Conf.
2.11.6.3.11	5799	HFPR Ramp-Down Rate	100	-1	10000	0,01	%/s	REAL	Conf.

6.11.6.4. P(f) Low Frequency Active Power Reference

Index	No.	Parameter	Def.	Min	Max	Form	Unit	Type	Handling
2.11.6.4.1	5620	Low Frequency Slope Start	99	0	200	2	%	REAL	Conf.
2.11.6.4.2	5622	Low Frequency Power Slope	5	-30	30	3	%/%	REAL	Conf.
2.11.6.4.3	5642	Low Frequency Power Release Ramp	0	0	1	1	%/s	BOOL	Conf.
2.11.6.4.4	5641	Low Frequency Log Off Frequency	0	0	1	1	%	BOOL	Conf.
2.11.6.4.5	5644	Low Frequency Freeze Power	1	0	1	1		INT	Conf.
2.11.6.4.6	5717	Low Frequency Slope Reference	0	0	1	1		INT	Conf.
2.11.6.4.7	5684	Low Frequency Start Delay	0	0	30	0,001	s	REAL	Conf.
2.11.6.4.8	5800	LFPR Power Filter Time Constant	0	0	10	0,001	s	REAL	Conf.
2.11.6.4.9	5801	LFPR Ramp-Up Rate	100	-1	10000	0,01	%/s	REAL	Conf.
2.11.6.4.10	5802	LFPR Ramp-Down Rate	100	-1	10000	0,01	%/s	REAL	Conf.

6.11.6.5. Low Frequency Power Reference 2

Index	No.	Parameter	Def.	Min	Max	Form	Unit	Type	Handling
2.11.6.5.1	5766	LFPR2 Start Frequency	0	0.00	200.00	0,01	%	REAL	Conf.
2.11.6.5.2	5767	LFPR2 Frequency at Max Power	0	0.00	200.00	0,01	%	REAL	Conf.
2.11.6.5.3	5770	LFPR2 Stop Hysteresis	0	0.00	5.00	0,01	%	REAL	Conf.
2.11.6.5.4	5771	LFPR2 Power Release Delay	0	0.00	120.00	0,001	s	REAL	Conf.
2.11.6.5.5	5772	LFPR2 Zero Charge Freq.	0.00	0	150	0,01	%	REAL	Conf.
2.11.6.5.6	5788	LFPR2 Power Off Ramp	5	-1	1000	0,001	%/s	REAL	Conf.

6.11.6.1. High Frequency Power Reference 2

Index	No.	Parameter	Def.	Min	Max	Form	Unit	Type	Handling
2.11.6.6.1	5774	HFPR2 Start Frequency	0	0	150.00	0,01	%	REAL	Conf.
2.11.6.6.2	5775	HFPR2 Min Power Frequency	0	0	150.00	0,01	%	REAL	Conf.
2.11.6.6.3	5776	HFPR2 Zero Generation Frequency	0	0.00	150.00	0,01	%	REAL	Conf.
2.11.6.6.4	5777	HFPR2 Stop Hysteresis	0	0.00	10.00	0,001	%	REAL	Conf.
2.11.6.6.5	5778	HFPR2 Power Release Delay	0	0.00	300.00	0,01	s	REAL	Conf.
2.11.6.6.6	5787	HFPR2 Power Off Ramp	5	-1	1000	0,001	%/s	REAL	Conf.

6.11.7. Limit Controls

6.11.7.1. General Settings

Index	No.	Parameter	Def.	Min	Max	Form	Unit	Type	Handling
2.11.7.1.1	5702	Grid Code Active Current Limit	100	0	300	0,1	%	REAL	Conf.
2.11.7.1.2	5714	Grid Code Reactive Current Limit	100	0	300	0,1	%	REAL	Conf.

6.11.7.2. Restricted Grid Support

Index	No.	Parameter	Def.	Min	Max	Form	Unit	Type	Handling
2.11.7.2.1	5631	Restricted Grid Support Mode	0,0	-170	0	1		REAL	Conf.
2.11.7.2.2	5632	Restricted Low Voltage	0,0	-170	0	0,01	%	REAL	Conf.
2.11.7.2.3	5633	Restricted High Voltage	0	0	200	0,01	%	REAL	Conf.
2.11.7.2.4	5781	Active/Reactive Limit Selection	0	0	2	1		UINT	Conf.

6.11.7.3. High Voltage Power Limit

Index	No.	Parameter	Def.	Min	Max	Form	Unit	Type	Handling
2.11.7.3.1	5680	HVPL Power Limiting Start Voltage	0	0	200	0,01	%	REAL	Conf.
2.11.7.3.2	5681	HVPL Power Limit Slope	0	0	100	0,01	%/%	REAL	Conf.
2.11.7.3.3	5718	HVPL Power Limit Tc	3,3	0	120	0,001	s	REAL	Conf.

6.11.7.4. Limited Post Fault Active Power Recovery

Index	No.	Parameter	Def.	Min	Max	Form	Unit	Type	Handling
2.11.7.4.1	5734	Limited FRT Power Recovery Enable	0	0	1	1		UINT	Conf.
2.11.7.4.2	5737	Limited FRT Power Recovery Delay	0	0	1	0,001	s	REAL	Conf.
2.11.7.4.3	5736	Limited FRT Power Recovery Rate	25	-1	10000	0,001	%/s	REAL	Conf.
2.11.7.4.4	5738	Extended FRT Power Recovery Time	0	0		0,001	s	REAL	Conf.

6.11.7.5. High Voltage Power Limit 2

Index	No.	Parameter	Def.	Min	Max	Form	Unit	Type	Handling
2.11.7.5.1	5749	High Voltage Start Voltage 2	0	0	200	0,01	%	REAL	Conf.
2.11.7.5.2	5759	High Voltage Start Power Limit 2	0	0	200	0,01	%	REAL	Conf.
2.11.7.5.3	5748	High Voltage End Voltage 2	0	0	200	0,01	%	REAL	Conf.
2.11.7.5.4	5747	High Voltage End Power Limit 2	0	0	200	0,01	%	REAL	Conf.

6.11.7.6. Low Voltage Power Limit 2

Index	No.	Parameter	Def.	Min	Max	Form	Unit	Type	Handling
2.11.7.6.1	5761	Low Voltage Start Voltage 2	0	0	200	0,01	%	UINT	Conf.
2.11.7.6.2	5762	Low Voltage Start Power Limit 2	0	0	200	0,01	%	REAL	Conf.
2.11.7.6.3	5763	Low Voltage End Voltage 2	0	0	200	0,01	%	REAL	Conf.
2.11.7.6.4	5764	Low Voltage End Power Limit 2	0	0	200	0,01	%	REAL	Conf.

6.11.7.7. Calibration

Index	No.	Parameter	Def.	Min	Max	Form	Unit	Type	Handling
2.11.19.1	5742	Active Power Correction at -100 % load	0	-5	5	0,001	%	REAL	Conf.
2.11.19.2	5740	Active Power Correction at 0 % load	0	-5	5	0,001	%	REAL	Conf.
2.11.19.3	5741	Active Power Correction at +100 % load	0	-5	5	0,001	%	REAL	Conf.

6.11.8. Field testing

Index	No.	Parameter	Def.	Min	Max	Form	Unit	Type	Handling
2.11.20.1	5660	Voltage offset	0	-1000	1000	0.01	Vac	REAL	Conf.
2.11.20.2	5661	Frequency offset	0	-75	75	0,001	Hz	REAL	Conf.
2.11.20.3	5687	Grid Voltage Analog Input	0		29999			UINT	
2.11.20.4	5689	Grid Voltage Analogue Min.	480	0	1000	0,1	Vac	REAL	Conf.
2.11.20.5	5690	Grid Voltage Analog Max.	900	0	1000	0,1	Vac	REAL	Conf.
2.11.20.6	5688	Grid Frequency Analog Input	0		29999	0,01		UINT	
2.11.20.7	5692	Grid Frequency Analogue min.	45	0	200	0,01	Hz	REAL	Conf.
2.11.20.8	5691	Grid Frequency Analogue Max.	55	0	200	0,01	Hz	REAL	Conf.

6.12. Maintenance & Service

Index	No.	Parameter	Def.	Min	Max	Form	Unit	Type	Handling
3.1.1	151	Application Version							STRING

6.13. Events

6.13.1. Event Simulation

Index	No.	Parameter	Def.	Min	Max	Form	Unit	Type	Handling
3.2.3.1	1400	Simulate Event	0	0	10			UINT	
3.2.3.2	1401	Simulate Persisting Event	0	0	10			UINT	
3.2.3.3	1402	Simulate Event Number	5260	0	65535			UINT	

6.14. Operation Counters

Index	No.	Parameter	Def.	Min	Max	Form	Unit	Type	Handling
3.3.1	2000	Control Unit On Time	0	0	2^32		h	UDINT	
3.3.2	2001	Power Unit On Time	0	0	2^32		h	UDINT	
3.3.3	2002	Energy Consumption	-	-	-		kWh	ULINT	
3.3.4	2004	Ground Faults	0	0	50000			UINT	
3.3.5	2005	Overvoltage Faults	0	0	50000			UINT	
3.3.6	2006	Overcurrent Faults	0	0	50000			UINT	
3.3.7	2007	Short Circuit Faults							
3.3.8	2008	Number of Starts	0	0	50000			UINT	
3.3.9	2009	Active Running Hours							
3.3.10	2100	Flash 0 Wear Counter							
3.3.11	2101	Flash 1 Wear Counter							

6.15. Tools

6.15.1. Cyber security

Index	No.	Parameter	Def.	Min	Max	Form	Unit	Type	Handling
3.5.1.1	5900	Max. Login Attempts	10	3	255	1			
3.5.1.2	5901	Max. Login Cooldown Time	300	10	86400	1	S		
3.5.1.3	5902	Security Event Log IP				1			
3.5.1.4	5903	Security Event Log Port	6514	6514	65535	1			

6.15.2. Troubleshooting

Index	No.	Parameter	Def.	Min	Max	Form	Unit	Type	Handling
3.5.2.1	5904	Force Recommissioning	Disabled	0	1				
3.5.2.2	5905	Save Diagnostic Log	Disabled	0	1				
3.5.2.3	5906	Service Access	Enabled	0	1				

6.16. Customization

6.16.1. Basic Setting

Index	No.	Parameter	Def.	Min	Max	Form	Unit	Type	Handling
5.1.1	2800	Date and Time							
5.1.2	6232	Time Mode							
5.1.3	6233	NTP Server 1							
5.1.4	6234	NTP Server 2							

6.16.2. Custom Status Word

Index	No.	Parameter	Def.	Min	Max	Form	Unit	Type	Handling
5.2.1	2411	Custom Status Word B0	100			1		UINT	Conf.
5.2.2	2412	Custom Status Word B1	101			1		UINT	Conf.
5.2.3	2413	Custom Status Word B2	102			1		UINT	Conf.
5.2.4	2414	Custom Status Word B3	103			1		UINT	Conf.
5.2.5	2415	Custom Status Word B4	104			1		UINT	Conf.
5.2.6	2416	Custom Status Word B5	301			1		UINT	Conf.
5.2.7	2417	Custom Status Word B6	302			1		UINT	Conf.
5.2.8	2418	Custom Status Word B7	310			1		UINT	Conf.
5.2.9	2419	Custom Status Word B8	0			1		UINT	Conf.
5.2.10	2420	Custom Status Word B9	0			1		UINT	Conf.
5.2.11	2421	Custom Status Word B10	0			1		UINT	Conf.
5.2.12	2422	Custom Status Word B11	0			1		UINT	Conf.
5.2.13	2423	Custom Status Word B12	0			1		UINT	Conf.
5.2.14	2424	Custom Status Word B13	0			1		UINT	Conf.
5.2.15	2425	Custom Status Word B14	0			1		UINT	Conf.
5.2.16	2426	Custom Status Word B15	0			1		UINT	Conf.

7. Application parameter description

7.1. Basic parameters

2.1.1 6536 Grid Nominal Frequency Hz

Set the nominal grid voltage frequency for grid control in Hz.

2.1.2 6537 Grid Nominal Voltage V

Set the nominal grid voltage for grid control in V. It is automatically updated if Unit Voltage Class (No. 2832) is changed.

2.1.3 6538 Grid Nominal Current A

Set the nominal grid current for grid control.

2.1.4 6539 Grid Voltage Feedback Source

Note: Not applicable for String PCS 300 kVA. See chapter 3.7 iC7-Hybrid String PCS 300 kVA hardware parameters.

Set the grid external voltage measurement configuration. Informs whether grid voltage measurement can be utilized in grid control. This parameter enables the closed loop operation for the Grid Converter as well as providing readouts for actual Grid Voltage and Grid Frequency.

The following are the selections for the parameter.

0 Off

Grid Converter operates in open loop.

1 X52

X52 terminal of the voltage measurement is used to operate in closed loop.

2 X53

X53 terminal of the voltage measurement is used to operate in closed loop.

2.1.5 6541 Filter Voltage Feedback Source

Note: Not applicable for String PCS 300 kVA. See chapter 3.7 iC7-Hybrid String PCS 300 kVA hardware parameters.

Set the filter external voltage measurement configuration. Informs whether filter voltage measurement can be utilized in grid control. This parameter enables the filter & transformer energization feature. The grid converter operates in closed loop operation.

The following are the selections for the parameter.

0 Off

Filter energization is disabled.

1 X52

X52 terminal of the voltage measurement is used to enable filter energization and operate in closed loop.

2 X53

X53 terminal of the voltage measurement is used to enable filter energization and operate in closed loop.

Grid Converter can utilize voltage feedback for the line filter (LCL) energization. It can charge the filter capacitors and synchronize to the voltage measured from the other side of the main circuit breaker. This way the inrush currents and voltage transients typically occurring after the breaker closes are effectively avoided.

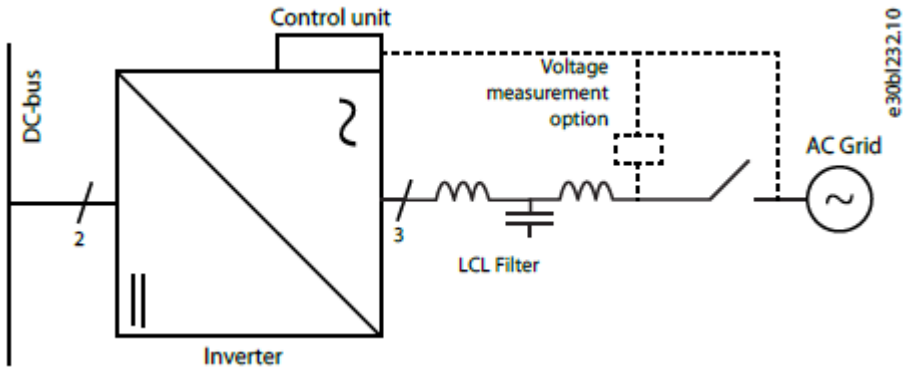

Figure 1. Grid Converter with Filter Voltage Feedback and Grid Voltage Feedback Measured by Voltage Measurement Option.

2.1.6 6547 Filter Voltage Feedback Location

Note: Not applicable for String PCS 300 kVA. See chapter 3.7 iC7-Hybrid String PCS 300 kVA hardware parameters.

Set the filter voltage feedback location for the closed loop operation.

The following are the selections for the parameter.

0 Converter side of the main circuit breaker

1 Grid side of the main circuit breaker

2.1.7 6123 Transformer Grid-Side Voltage V

Nominal voltage of the main transformer grid-side winding.

2.1.8 6124 Transformer Converter-Side Voltage V

Nominal voltage of the main transformer converter-side winding.

2.1.9 6125 Transformer Phase Shift °

Phase shift of the main transformer, that is, phase difference between the converter and the load voltage.

2.1.10 6126 Transformer Nominal Power kVA

Nominal power of the main transformer.

2.1.11 6127 Transformer Nominal Frequency Hz

Nominal frequency of the main transformer.

2.1.12 6128 Transformer Short-Circuit Impedance %

Short-circuit impedance of the main transformer in % of the nominal impedance.

2.1.13 6129 Transformer Nom. Load Losses kW

Transformer power loss with nominal load.

2.1.14 6133 Grid Voltage Feedback Location

Note: Not applicable for String PCS 300 kVA. See chapter 3.7 iC7-Hybrid String PCS 300 kVA hardware parameters.

Set the grid voltage feedback location for the closed loop operation. This parameter defines the point which Grid Converter controls in the closed loop operation.

The following are the selections for the parameter.

0 Converter side of the main transformer

1 Grid side of the main transformer

2.1.15 2834 DC-link Nominal Voltage V

Set the DC-link nominal voltage. This parameter is re-initialized based on the unit nominal voltage when set to 0 or if Unit Voltage Class (No. 2832) is changed. This parameter must be set based on the system common dc-bus nominal voltage. This parameter affects the scaling of DC-link voltage reference and readouts as well as DC-link over and undervoltage limit controller references.

2.1.16 2832 Unit Voltage Class

Select the unit voltage class to optimize the performance of the converter. Each power unit is rated for a wide voltage range which the converter can operate in. This parameter is used to specify a narrower band within that range to determine optimized values for the unit's nominal voltage and current. The Grid Nominal Voltage, DC-link nominal voltage, and Over and Undervoltage controller limits are calculated automatically whenever this parameter is changed. This parameter also affects the DC-link ready state which is defined as the minimum value the DC-link voltage needs to reach before the modulation can start.

The following are the selections for the parameter.

1 Low-voltage range

Unit nominal voltage and current are set according to the lowest end of the unit's voltage range.

• For example, for 05-units this range is 380-440 V AC

• For example, for 07-units this range is 500-550 V AC.

2 Mid-voltage range

Unit nominal voltage and current are set according to the middle of the unit's voltage range.

• For example, for 05-units this range is 440-480 V AC.

• For example, for 07-units this range is 550-600 V AC.

3 High-voltage range

Unit nominal voltage and current are set according to the highest end of the unit's voltage range.

• For example, for 05-units this range is 480-500 V AC.

• For example, for 07-units this range is 600-690 V AC.

4 Wide-voltage range

Unit nominal voltage and current are set according to the unit's whole voltage range.

For example, for iC7-Hybrid Liquid Cooled System Modules:

• For B5 voltage class this range is 380-500 V AC and 350-800 V DC.

• For 07 voltage class this range is 500-690 V AC and 350-1100 V DC.

2.1.17 2833 Overload Mode

Select the overload mode. Overloading mode selects an overtemperature protection profile for the converter, affecting current limits and protection activation times. With a higher overloading mode, the converter will operate in a greater degree of overloading before protections take effect. Specific limits and activation delays depend on the conditions.

The following are the selections for the parameter.

0 Automatic

The converter automatically determines whether to use the Low or High Overload Mode.

1 Low overload (LO)

The converter uses the lower overloading profile. Overtemperature protection is activated with a lesser degree of overload.

2 High overload (HO1)

The converter uses a higher overloading profile. Overtemperature protection is activated with a higher degree of overload.

3 High overload increased duty (HO2)

The converter uses the highest overloading profile. Overtemperature protection is activated with the highest degree of overload.

2.1.18 2947 Current/Power Positive Direction

Select the sign convention to be used for current and power.

The following are the selections for the parameter.

0 From DC-link to Grid

Current and power are positive when flowing from DC-link side to grid side

1 From Grid to DC-link

Current and power are positive when flowing from grid side to DC-link side

2.1.19 9654 Paralleling Sync. Mode

Enable synchronization controller for parallel-connected converters without galvanic isolation to reduce circulating common mode current.

The following are the selections for the parameter.

0 Disabled

1 Enabled.

7.2. Control mode and references

7.2.1. Control Mode

2.2.1.1 161 Operation Mode

Select the converter operation mode.

Transitions between the operation modes can be done instantly, for example through the fieldbus control word. As an example, the transition from DC-link voltage control to droop control when the operating mode of a shaft generator system is changed from Power Take In (PTI) to Power Take Out (PTO).

The following are the selections for the parameter.

0 Island, Grid Forming

The primary control objective is to regulate source frequency and voltage to a fixed value, such as when the converter operates in isochronous mode. Active and reactive power is determined by load. Only one isochronous converter can be connected to same grid.

1 Droop, Grid Forming

Voltage and frequency regulated based on dropping curves. Active and reactive power is determined by load. Parallel converters connected to same grid share load by drooping.

2 Droop with base load, Grid Forming

Voltage and frequency regulated based on drooping curves. Active and reactive power is determined by load. Droop curves are offset based on current/power references. Parallel converters connected to same grid share load by drooping.

3 PQ Control, Grid Forming

Active power/current and reactive power/current determined based on upper control system. Parallel converters connected to the same AC bus share the load based on the given references

4 DC Link Voltage (AFE), Grid Following

Active power based on DC link load. Reactive power controllable.

5 DC Link Current/Power, Grid Following

DC-Link active power/current and reactive power/current determined based on upper control system.

6 Active Current/Power, Grid Following

Active power/current and reactive power/current determined based on upper control system.

2.2.1.2 163 Converter Reference Mode

Select between current and power control.

The following are the selections for the parameter.

0 Current Control

1 Power Control

2.2.1.3 4998 Harmonic Compensation Mode

Select the harmonic compensation mode

The following are the selections for the parameter.

0 Off

The feature is disabled

1 Voltage Harmonic Compensation (Reduced)

Enables voltage harmonic compensation of 5th, 7th, 11th, and 13th harmonic only.

2 Voltage Harmonic Compensation (Full)

Enables voltage harmonic compensation of 5th, 7th, 11th, 13th, 17th, and 19th harmonic only.

2.2.1.4 306 Synthetic Inertia Mode

Enable or disable synthetic inertia. Functional with droop base load control mode only.

0 Disabled

The feature is disabled

1 Enabled

7.2.2. Grid Frequency Reference

Frequency reference is used to control output frequency as well as the active current/power delivered by grid converter. The following is the reference chain diagram of frequency reference.

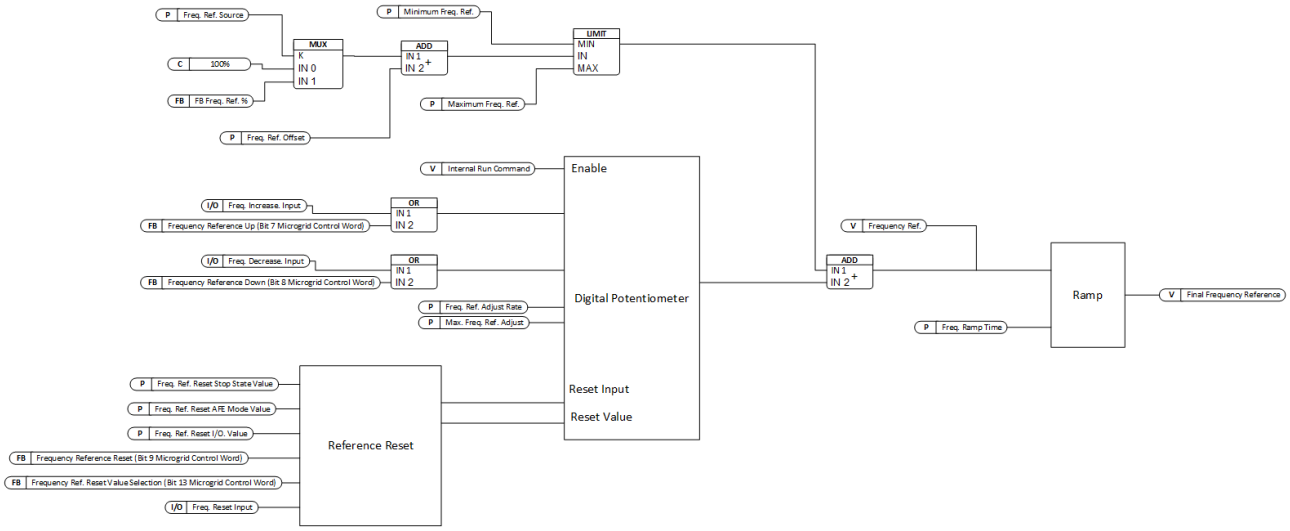

2.2.2.1 5050 Freq. Ref. Source

Set the grid frequency reference source.

The following are the selections for the parameter.

0 Grid Nominal Frequency

1 Fieldbus Reference

2.2.2.2 5051 Minimum Freq. Ref. Hz

Set the minimum grid frequency reference in Hz.

2.2.2.3 5052 Maximum. Freq. Ref. Hz

Set the maximum grid frequency reference in Hz.

7.2.2.1.Digital Potentiometer for Grid Frequency

A digital potentiometer is used to adjust the grid frequency reference and it has inputs to increase and decrease the reference based on grid load. A reset function provides the possibility to reset the digital potentiometer, and allows a zero active power start for the grid converter. There are four different inputs for digital potentiometer reset, and each has its own action.

The reset action can be selected with the parameter P 2.2.2.10 Freq. Ref. Reset Stop State Value when the converter is in stop state. When the control mode is DC voltage control (AFE), the reset action can be selected with the parameter P 2.2.2.12 Freq. Ref. Reset AFE Mode Value. The digital input P 2.2.2.6 Freq. Reset Input can also be used as reset input, and the reset action is selected using P 2.2.2.11 Freq. Ref. Reset I/O Value.

The digital potentiometer reset can also be done using the fieldbus. Using the fieldbus, the reset command is given with the default bit 9 of the Custom Control Word (MicrogridCw). The reset action is selected with the default bit 13 of the Custom Control Word (MicrogridCw).

2.2.2.4 5053 Freq. Increase. Input

Set the digital input for grid frequency reference increase.

2.2.2.5 5054 Freq. Decrease. Input

Set the digital input for grid frequency reference decrease.

2.2.2.6 5055 Freq. Reset Input

Set the digital input for grid frequency reference reset.

2.2.2.7 5056 Freq. Ref. Offset Hz

Set the grid frequency reference offset in Hz.

2.2.2.8 5057 Freq. Ref. Adjust Rate Hz/s

Set the grid frequency reference adjust rate in Hz per second.

2.2.2.9 5058 Max. Freq. Ref. Adjust Hz

Set the maximum adjustment to the grid frequency reference.

2.2.2.10 5059 Freq. Ref. Reset Stop State Value

Grid frequency reference reset value in stop state.

The following are the selections for the parameter.

0 No Reset

1 Reset to Grid Nominal

Reset the reference to grid nominal value at the falling edge of run state (run to stop).

2 Reset to Grid Actual

Reset the reference to grid actual value at the falling edge of run state (run to stop).

2.2.2.11 5060 Freq. Ref. Reset I/O. Value

Grid frequency reference reset value for I/O reset.

The following are the selections for the parameter.

0 No Reset

1 Reset to Grid Nominal

Reset the reference to grid nominal value at the rising edge of Freq. Reset Input (No. 5055).

2 Reset to Grid Actual

Reset the reference to grid actual value at the rising edge of Freq. Reset Input (No. 5055).

2.2.2.12 5061 Freq.Ref. Reset AFE Mode Value

Gird frequency reference reset value in AFE mode.

The following are the selections for the parameter.

0 No Reset

1 Reset to Grid Nominal

Reset the reference to grid nominal value when the operation mode is changed to any of the Grid Following Mode (for example AFE Mode).

2 Reset to Grid Actual

Reset the reference to grid actual value when the operation mode is changed to any of the Grid Following Mode (for example AFE Mode).

2.2.2.13 5062 Freq. Ramp Time s

Ramp rate for grid frequency reference; defined in seconds from 0 to nominal grid frequency. It also applies to the change in reference from the nominal point in the run state. As well as the grid sync. will use this ramp when accelerating / decelerating to get the phase angle correct.

2.2.2.14 5063 Freq. Droop Gain Hz

Set the frequency droop control gain.

2.2.2.15 5064 Freq. Droop Tc s

Set the frequency droop control time constant.

2.2.2.16 5065 Freq. Drooping Base Load Scale %

Set the base load scale. If the grid is isochronous (non-drooping), the active current will match the reference. If grid is drooping, it is possible to account for the drooping by adjusting the base load scale.

7.2.3. Grid Voltage Reference

Grid Voltage reference is used to control the grid voltage as well as the reactive current/power delivered by the grid converter. The following is the reference chain diagram of grid voltage reference.

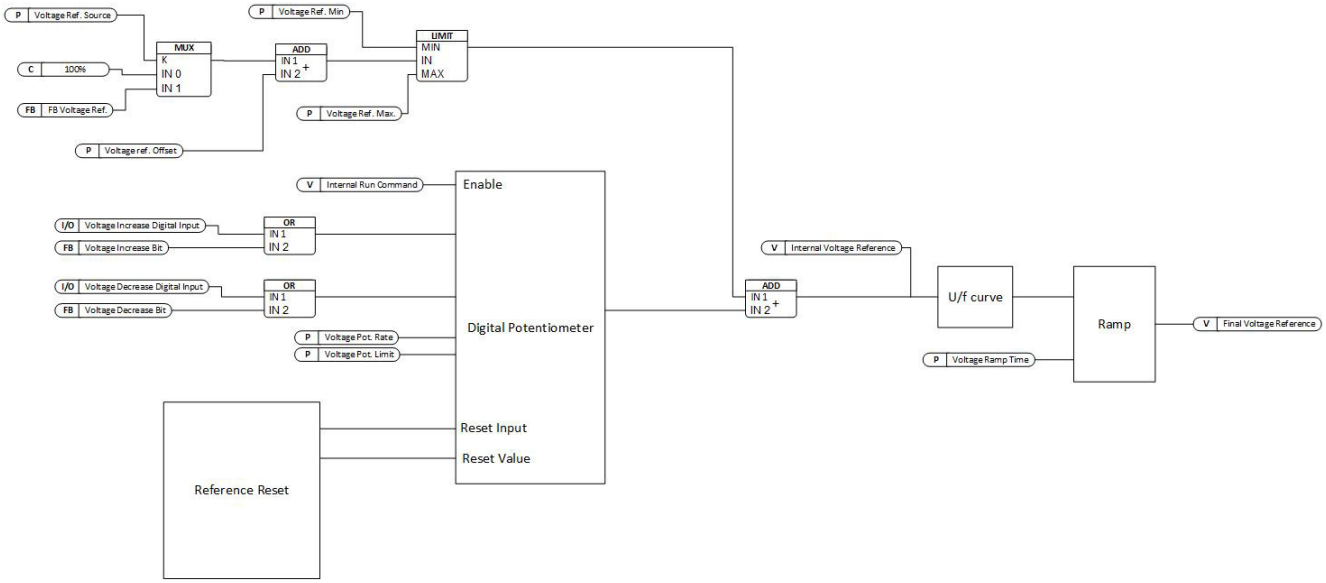

2.2.3.1 5066 Voltage Ref. Source

Set the grid voltage reference source.

The following are the selections for the parameter.

0 100% of Grid Nominal Voltage

1 Fieldbus Reference

2.2.3.2 5067 Min. Voltage Ref. %

Set the minimum grid voltage reference in % of the nominal grid voltage.

2.2.3.3 5068 Max. Voltage Ref. %

Set the maximum grid voltage reference in % of the nominal grid voltage.

7.2.3.1.Digital Potentiometer for Grid Voltage Reference

Voltage reference is used to control Grid Converter output voltage as a percentage of the nominal grid voltage. The reference is adjusted with a digital potentiometer. It has inputs to increase and decrease the reference based on grid load. The digital potentiometer can be reset to allow a zero reactive power start for the grid converter. There are 4 different inputs for digital potentiometer reset, and each input has its own action.

The reset action can be selected with the parameter P 2.2.3.10 Voltage Ref. Reset Stop State Value when the converter is in stop state. When the control mode is AFE, the reset action can be selected with the parameter P 2.2.3.12 Voltage Ref. Reset AFE Mode Value. The digital input P 2.2.3.6 Voltage Reset Input can also be used as reset input, and the reset action is selected using P 2.2.3.11 Voltage Ref. Reset I/O Value.

The digital potentiometer reset can also be done using the fieldbus. Using the fieldbus, the reset command is given with the default bit 12 of the Custom Control Word (MicrogridCw). The reset action is selected with the default bit 14 of the Custom Control Word (MicrogridCw).

2.2.3.4 5069 Voltage Incr. Input

Set the digital input for grid voltage reference increase.

2.2.3.5 5070 Voltage Decr. Input

Set the digital input for grid voltage reference decrease.

2.2.3.6 5071 Voltage Reset Input

Set the digital input for grid voltage reference reset.

2.2.3.7 5072 Voltage Ref. Offset %

Set the grid voltage reference offset in % of the nominal grid voltage.

2.2.3.8 5073 Voltage Ref. Adjust Rate %/s

Set the grid voltage reference adjust rate in percentage per second of the nominal grid voltage.

2.2.3.9 5074 Max. Voltage Ref. Adjust %

Set the maximum adjustment to the grid voltage reference in % of the grid nominal voltage.

2.2.3.10 5075 Voltage Ref. Reset Stop State Value

Grid voltage reference reset value in stop state.

The following are the selections for the parameter.

0 No Reset

1 Reset to Grid Nominal

Reset the reference to grid nominal value at the falling edge of run state (run to stop).

2 Reset to Grid Actual

Reset the reference to grid actual value at the falling edge of run state (run to stop).

2.2.3.11 5076 Voltage Ref. Reset I/O. Value

Grid voltage reference reset value for I/O reset.

The following are the selections for the parameter.

0 No Reset

1 Reset to Grid Nominal

Reset the reference to grid nominal value at the rising edge of Freq. Reset Input (No. 5055).

2 Reset to Grid Actual

Reset the reference to grid actual value at the rising edge of Freq. Reset Input (No. 5055).

2.2.3.12 5077 Voltage Ref. Reset AFE Mode Value

Grid voltage reference reset value in AFE mode.
The following are the selections for the parameter.

0 No Reset

1 Reset to Grid Nominal

Reset the reference to grid nominal value when the operation mode is changed to any of the Grid Following Mode (for example AFE Mode).

2 Reset to Grid Actual

Reset the reference to grid actual value when the operation mode is changed to any of the Grid Following Mode (for example AFE Mode).

2.2.3.13 5078 Voltage Ramp Time s

Ramp rate for grid voltage reference; defined in seconds from 0 to nominal grid voltage.

2.2.3.14 5079 Field Weakning Point Freq. Hz

Set the field weakening frequency, below which grid voltage is linearly reduced as a function of grid frequency.

2.2.3.15 5085 Voltage Droop Gain %

Set the voltage droop control gain.

2.2.3.16 5086 Voltage Droop Tc s

Set the voltage droop control time constant.

2.2.3.17 5087 Voltage Drooping Base Load Scale %

Set the base load scale. If the grid is isochronous (non-drooping), the reactive current will match the reference. If grid is drooping, it is possible to account for the drooping by adjusting the base load scale.

7.2.4. Grid Current Reference

Grid Current reference is used to control the active current and reactive current. The following are the reference chains for both active and reactive current references.

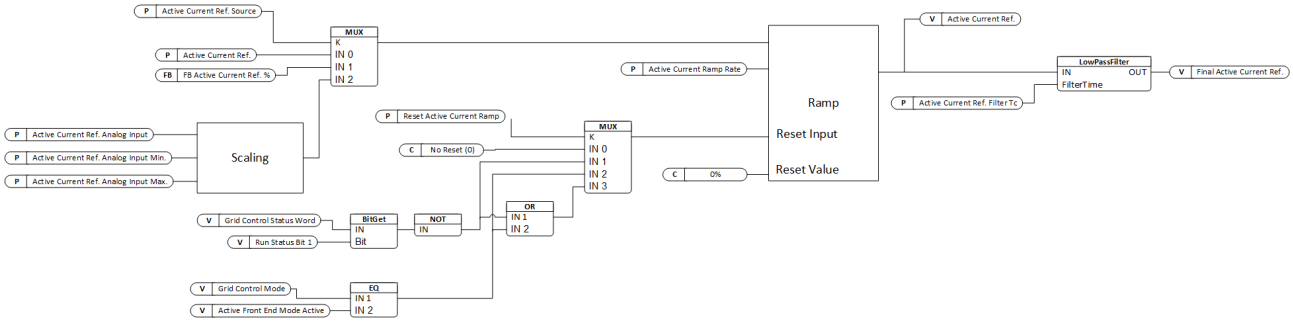

Active Current Reference

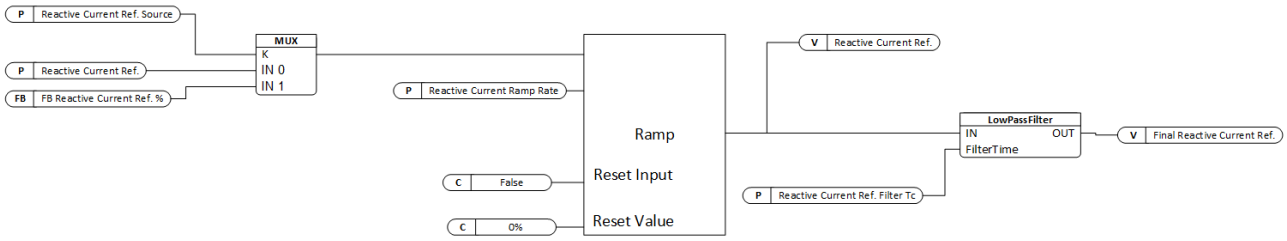

Reactive Current Reference

2.2.4.1 245 Active Current Ref. Source

Use to select the active current reference source.

The following are the selections for the parameter.

0 Parameter

1 Fieldbus Reference

2 Analog Input

2.2.4.2 230 Active Current Ref. %

Set grid active current reference in % of the grid nominal current.

2.2.4.3 231 Active Current Ref. Ramp Rate Increasing %/s

Ramp rate for grid frequency reference; defined in seconds from 0 to nominal grid frequency. It also applies to the change in reference from the nominal point in the run state. As well as the grid sync. will use this ramp when accelerating / decelerating to get the phase angle correct.

2.2.4.4 247 Active Current Ref. Ramp Rate Decreasing %/s

Set maximum rate of change for the grid active current reference when the latter is decreased in absolute value. It is expressed in percent per second of the grid nominal current. When set to a negative value the rate limiting is disabled.

2.2.4.5 232 Active Current Ramp Reset

Set the reset condition for the grid active current reference ramp.

The following are the selections for the parameter.

0 No Reset

The ramp is not reset.

1 Not Operating

The ramp is reset when in stop state or the MCB is open.

2 AFE Mode

The ramp is reset when AFE is the active operation mode.

3 Not Operating or AFE Mode

The ramp is reset when in stop state or the MCB is open or when AFE is the active operation mode.

2.2.4.6 5099 Active Current Ref. Filter Tc s

Active current reference low pass filter time constant.

2.2.4.7 3021 Reactive Current Ref. Source

Use to select the reactive current reference source.

The following are the selections for the parameter.

0 Parameter

1 Fieldbus Reference

2.2.4.8 233 Reactive Current Ref. %

Set grid reactive current reference in % of the grid nominal current.

2.2.4.9 234 Reactive Current Ramp Rate %/s

Set grid reactive current reference ramp rate in percentage per second to the grid nominal current.

2.2.4.10 6570 Reactive Current Ref. Filter Tc s

Reactive current reference low pass filter time constant.

7.2.5. Grid Power Reference

Grid Converter also allows direct power reference for controlling active and reactive power.

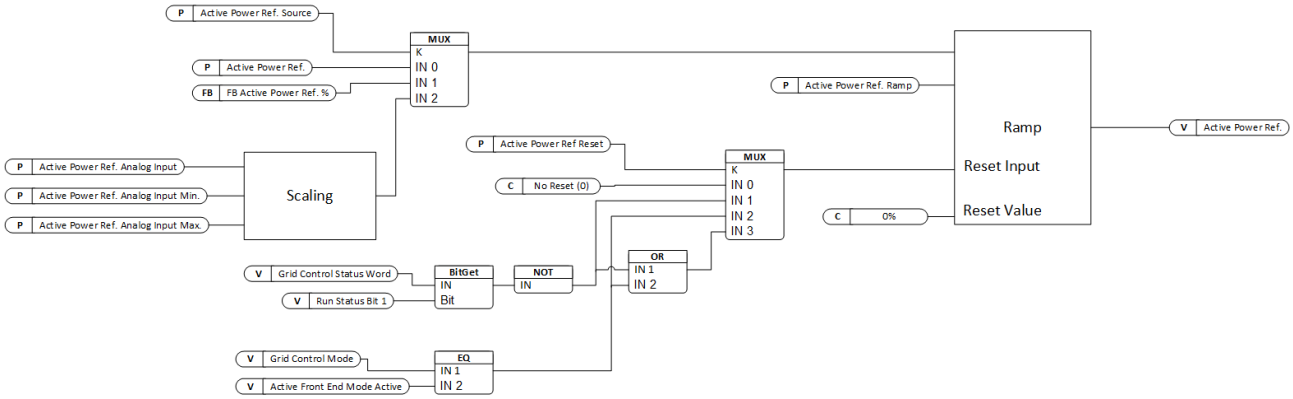

Active Power Reference

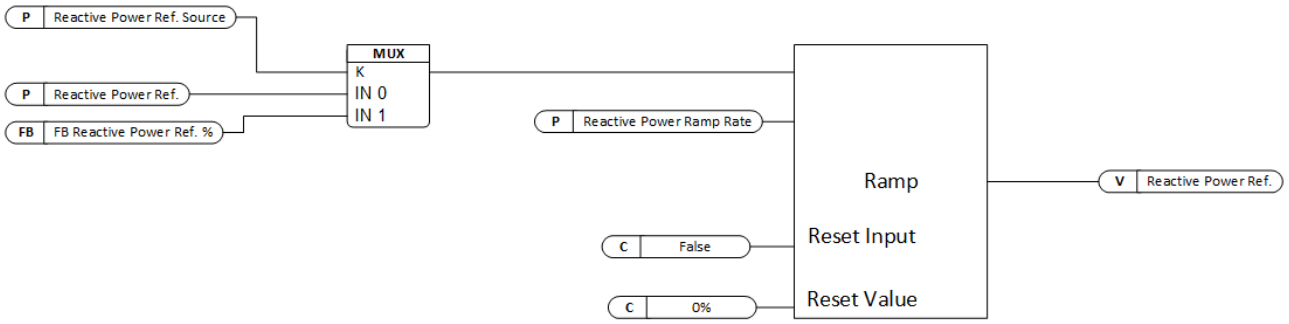

Reactive Power Reference

2.2.5.1 6550 Active Power Ref. Source

Select the active power reference source.

The following are the selections for the parameter.

0 Parameter

1 Fieldbus Reference

2 Analog Input

2.2.5.2 235 Active Power Ref. %

Set active power reference in % of the grid nominal power.

2.2.5.3 236 Active Power Ref. Ramp Rate Increasing %/s

Set maximum rate of change for the grid active power reference when the latter is increased in absolute value. It is expressed in percent per second of the grid nominal power. When set to a negative value the rate limiting is disabled.

2.2.5.4 248 Active Power Ref. Ramp Rate Decreasing

Set maximum rate of change for the grid active power reference when the latter is decreased in absolute value. It is expressed in percent per second of the grid nominal power. When set to a negative value the rate limiting is disabled.

2.2.5.5 237 Active Power Ramp Reset

Set the reset condition for the grid active power reference ramp.

The following are the selections for the parameter.

0 No Reset

The ramp is not reset.

1 Not Operating

The ramp is reset when in stop state or the MCB is open.

2 AFE Mode

The ramp is reset when AFE is the active operation mode.

3 Not Operating or AFE Mode

The ramp is reset when in stop state or the MCB is open or when AFE is the active operation mode.

2.2.5.6 5109 Active Power Ref. Filter Tc

2.2.5.7 6549 Reactive Power Ref. Source

Select the reactive power reference source.

The following are the selections for the parameter.

0 Parameter

1 Fieldbus Reference

2.2.5.8 238 Reactive Power Ref. %

Set reactive power reference in % of the grid nominal power.

2.2.5.9 239 Reactive Power Ref. Ramp %/s

Set reactive power reference ramp rate in percentage per second of the grid nominal power.

2.2.5.10 6586 Reactive Power Ref. Filter Tc

7.2.6. DC-Link Voltage Reference

Grid Converter can regulate DC-link voltage in the Active Front End Mode. DC-link voltage reference is scaled based on DC-link Nominal Voltage. The minimum allowed reference from parameter and fieldbus is 100% of the DC-link Nominal Voltage. The maximum allowed reference from parameter and fieldbus is 150% of the DC-link Nominal Voltage. If needed a further offset can be added to the reference using the offset parameter which can expand the range to 80% to 170% of the DC-link Nominal Voltage.

$$Internal\ Ref.Scaling = \frac{DC-link\ Nominal\ Voltage * Transformer\ Grid\ Side\ Voltage}{\sqrt{2} * Grid\ Nominal\ Voltage * Transformer\ Converter\ Side\ Voltage}$$

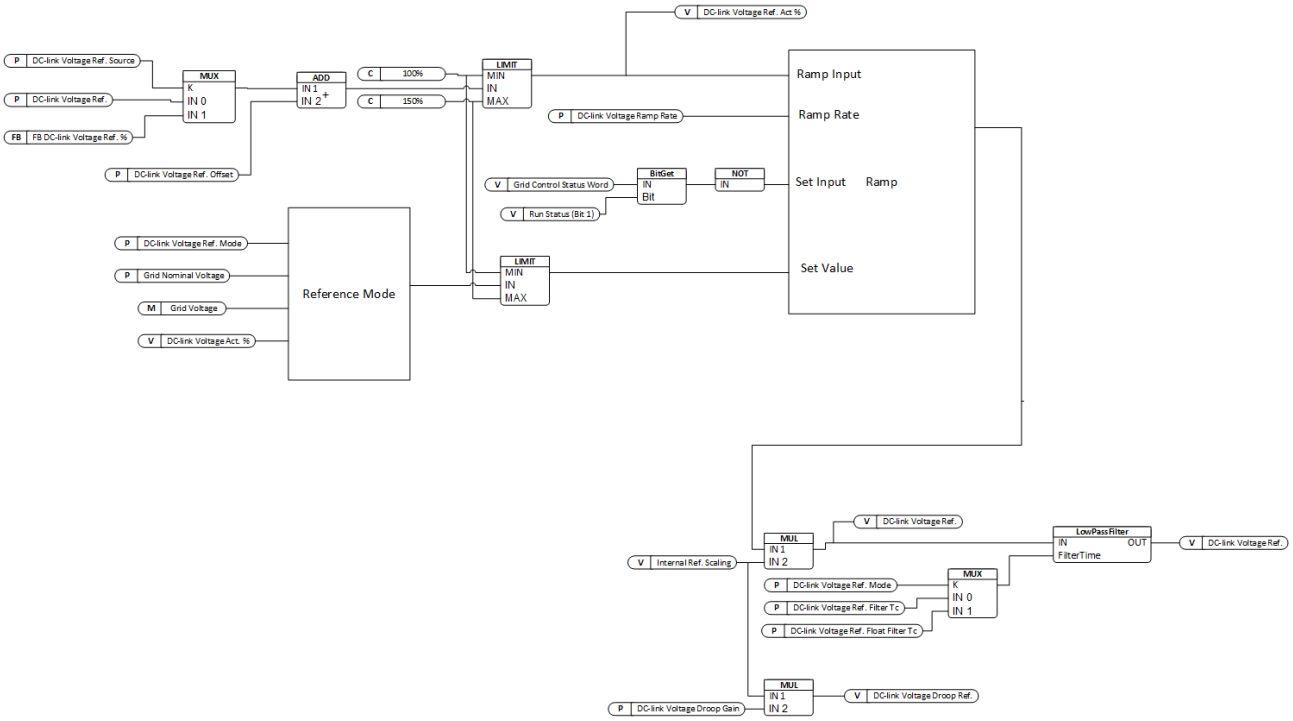

2.2.6.1 2916 DC-link Voltage Ref. Source

Select the source for the DC-link voltage reference.

The following are the selections for the parameter.

0 Parameter

1 Fieldbus Reference

2.2.6.2 2910 DC-link Voltage Ref. %

Set the DC-link voltage reference. The percentage is calculated according to par. DC-link Voltage Ref. Mode (No. 2888).

2.2.6.3 2914 DC-link Voltage Ref. Offset %

Set the DC-link voltage reference offset. The percentage is calculated according to par. DC-link Voltage Ref. Mode (No. 2888).

2.2.6.4 2912 DC-link Voltage Droop Gain %

Set the DC-link voltage drooping gain; change of DC voltage reference per (active) current change.

2.2.6.5 2893 DC-link Voltage Ramp Rate %/s

Set the maximum rate of change for the DC-link voltage reference, DC-link overvoltage and DC-link undervoltage controller limits.

2.2.6.6 2894 DC-link Voltage Ref. Filter Tc s

Set the DC-link voltage reference low pass filter time constant.

2.2.6.7 2895 DC-link Voltage Ref. Float Filter Tc s

Filtering time constant of actual grid voltage when floating reference mode is used.

2.2.6.8 2888 DC-link Voltage Ref. Mode

DC-link voltage reference mode selection defines the base for the DC-link Voltage reference scaling. By default, the reference mode is set to '0' which provides a fixed scaling for the DC-link Voltage reference based on DC-link Nominal Voltage parameter. For reference mode '1', the DC-link Voltage reference is scaled based on actual Grid Voltage rectified to DC-link Voltage. Reference mode '1' allows the user to select a floating reference base which changes if the Grid Voltage changes.

As an example, if the reference mode is '0', and Grid Nominal Voltage = 690 V and DC-link Nominal Voltage =1000 V, then setting the DC-link voltage reference to 110% corresponds to 1100 V DC-link voltage. Alternatively, with the same settings, if reference mode '1' is selected then the final DC-link voltage depends on the Grid Voltage. If the Grid Voltage changes from 690 V to 710 V then with the same 110% reference, the DC-link Voltage changes according to 1.1*$\sqrt{2} * Grid\ Voltage$ -> 1073 V to 1104 V.

The following are the selections for the parameter.

0 In % of Nominal DC-link Voltage

DC-link voltage reference is scaled based on DC-link Nominal Voltage

1 In % of actual rectified grid voltage (floating)

DC-link voltage reference is scaled based on actual rectified grid voltage.

7.2.7. DC-Link Current Reference

2.2.7.1 6138 DC-link Current Ref. Source

Select the DC-link current reference source.

The following are the selections for the parameter.

0 Parameter

1 Fieldbus Reference

2 Analog Input

2.2.7.2 6136 DC-link Current Ref. %

Set the DC-link current reference (in % of the DC-link nominal current) when reference source is set to parameter.

2.2.7.3 6135 DC-link Current Ramp Rate %/s

Set ramp rate for the DC-link current reference (-1 = disable ramp).

2.2.7.4 6137 DC-link Current Ramp Reset

Select when DC-link current reference ramp is reset.

The following are the selections for the parameter.

0 No Reset

1 Reset at Stop

2 Reset at AFE (DC-link Voltage Control) Mode

3 Reset either at Stop or AFE Mode

2.2.7.5 6140 DC-link Current Ref. Filter Tc s

Set the DC-link current reference low-pass filter time constant.

2.2.7.6 6142 DC-link Current Ref. Analog Input

Select the analog input (terminal or as a percentage) for the DC-link current reference.

2.2.7.7 6143 DC-link Current Ref. Analog Max. %

Set the maximum for DC-link current reference when reference source is set to analog input.

2.2.7.8 6144 DC-link Current Ref. Analog Min. %

Set the minimum for DC-link current reference when reference source is set to analog input.

7.2.8. DC-Link Power Reference

2.2.8.1 7890 DC-link Power Ref. Source

Select the DC-link power reference source.

The following are the selections for the parameter.

0 Parameter

1 Fieldbus Reference

2 Analog Input

2.2.8.2 7689 DC-link Power Ref. %

Set the DC-link power reference when reference source is set to parameter.

2.2.8.3 7691 DC-link Power Ramp Rate %/s

Set ramp rate for the DC-link power reference (-1 = disable ramp).

2.2.8.4 7692 DC-link Power Ramp Reset

Select when DC-link power reference ramp is reset.

The following are the selections for the parameter.

0 No Reset

1 Reset at Stop

2 Reset at AFE (DC-link Voltage Control) Mode

3 Reset either at Stop or AFE Mode

2.2.8.5 7694 DC-link Power Ref. Analog Input

Select the analog input (terminal or as a percentage) for the DC-link power reference.

2.2.8.6 7695 DC-link Power Ref. Analog Max. %

Set the maximum for DC-link power reference when reference source is set to analog input.

2.2.8.7 7696 DC-link Power Ref. Analog Min. %

Set the minimum for DC-link power reference when reference source is set to analog input.

7.3. Limits

7.3.1. Grid Current Limit

Grid current limits are defined by overall current limit, negative active current limit, and positive active current limit. Both negative and positive current limits are used as process limits. These process current limits can be ramped up (away from 0) with ramp rate defined by the respective parameter. Ramp down is instantaneous, except in situations when a warning with the ramp current limit down response is active. In that case, the limits are brought down first to the actual current and then ramped down (towards the warning active preset).

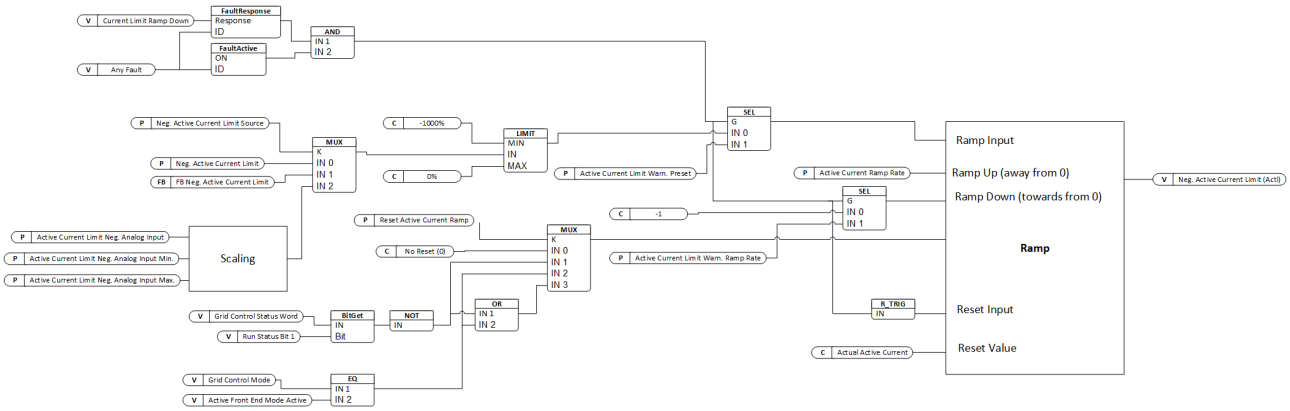

Negative Active Current Limit

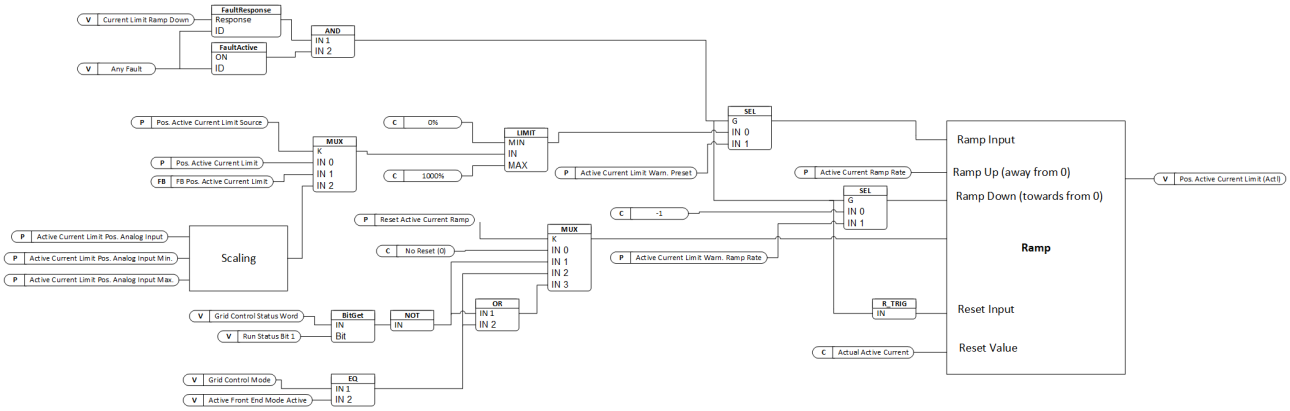

Positive Active Current Limit

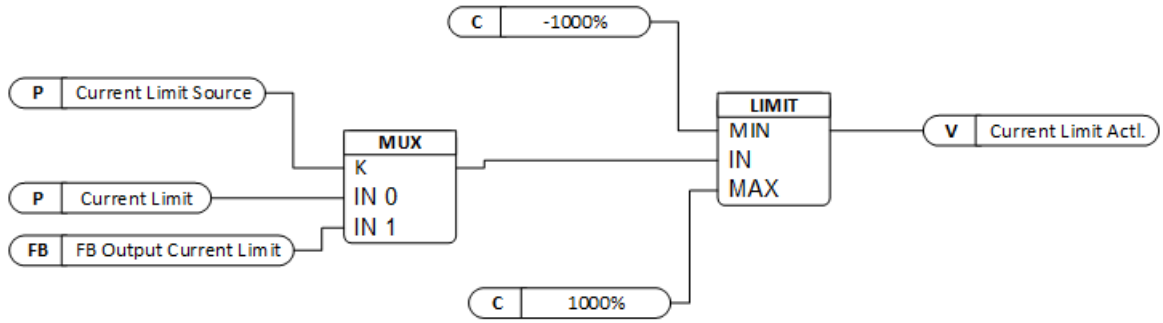

Current Limit

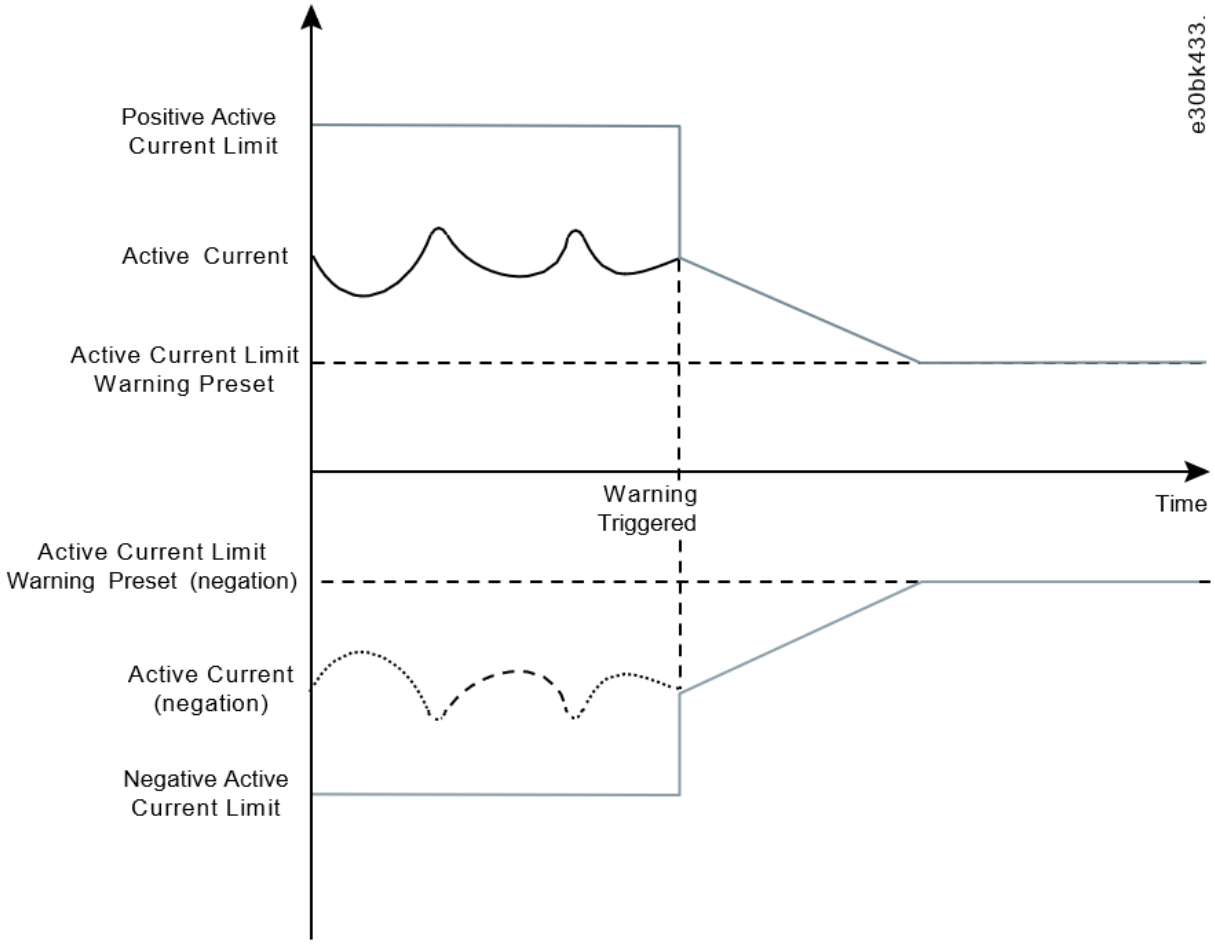

Current Limit Ramp Down with warning active

2.3.1.1 2343 Enable Freq. Based Current Limit

Enable current limit control using PQ active current control. This parameter enables active current limit control for grid forming control. When the current limit is reached, the converter adjusts the output frequency to limit the active current.

The following are the selections for the parameter.

0 Disabled

1 Enabled.

2.3.1.2 2853 Current Limit Priority

Set current limit priority configuration. If the current limit regulator is active, then it starts to limit either the Active or Reactive Current based on the selection of this parameter.

The following are the selections for the parameter.

0 Active Current

1 Reactive Current

2.3.1.3 2854 Neg. Active Current Limit Source

Select the source for the active current limit in negative direction.

The following are the selections for the parameter.

0 Parameter

1 Fieldbus Reference

2.3.1.4 2855 Neg. Active Current Limit %

Set the active current limit in negative direction in % of the grid nominal current.

2.3.1.5 2856 Neg. Active Current Limit Ramp Up Rate %/s

Set the ramp rate for the active current limit in negative direction in % (of the grid nominal current) per second. This ramp rate is applied only when the limit is increased in absolute value.

2.3.1.6 2857 Pos. Active Current Limit Source

Select the source for the active current limit in a positive direction.

The following are the selections for the parameter.

0 Parameter

1 Fieldbus Reference

2.3.1.7 2858 Pos. Active Current Limit %

Set the active current limit in a positive direction in % of the grid nominal current.

2.3.1.8 2852 Current Limit Source

Current magnitude limit source selection.

The following are the selections for the parameter.

0 Parameter

1 Fieldbus Reference

2.3.1.9 2851 Current Limit %

Output current limit in % of the grid nominal current.

2.3.1.10 133 Neg. Reactive Current Limit

Set the reactive current limit in negative direction in % of the grid nominal current.

2.3.1.11 132 Pos. Reactive Current Limit

Set the reactive current limit in positive direction in % of the grid nominal current.

7.3.2. Grid Power Limit

Grid power limits are controlled using negative and positive active power limits.

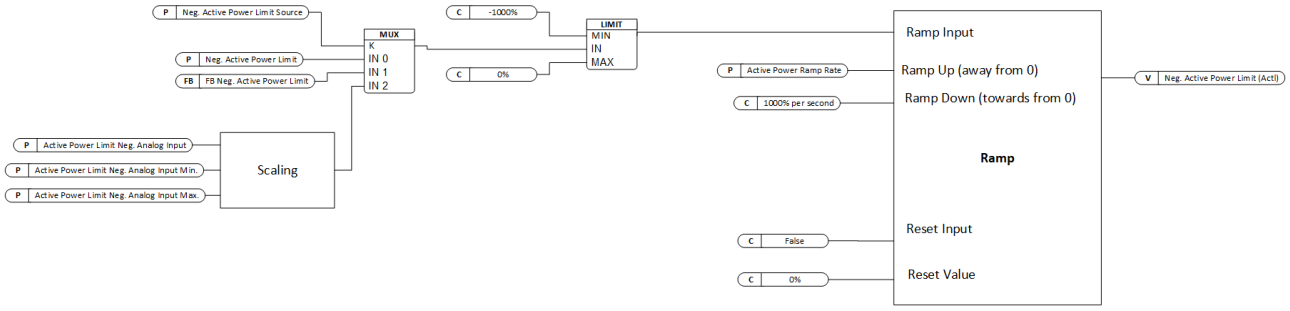

Negative active power limit

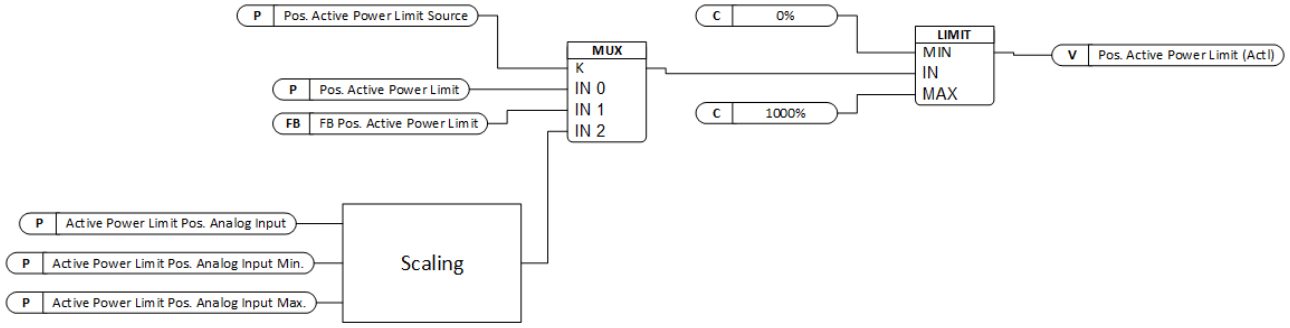

Positive active power limit

2.3.2.1 2861 Neg. Active Power Limit Source

Select the source for the active power limit in negative direction.

The following are the selections for the parameter.

0 Parameter

1 Fieldbus Reference

2.3.2.2 2862 Neg. Active Power Limit %

Set the active power limit in negative direction in % of the grid nominal power.

2.3.2.3 2863 Neg. Active Power Limit Ramp Up Rate %/s

Set the ramp rate for the active power limit in negative direction in % (of the grid nominal power) per second. This ramp rate is applied only when the limit is increased in absolute value.

2.3.2.4 2864 Pos. Active Power Limit Source

Select the source for the active power limit in a positive direction.

The following are the selections for the parameter.

0 Parameter

1 Fieldbus Reference

2.3.2.5 2865 Pos. Active Power Limit %

Set the active power limit in a positive direction in % of the grid nominal power.

7.3.3. Short-term Current Injection

Grid Converter has two current limits: normal grid current limits and short-term current injection limits. The former is for controlling current in normal operating conditions, and the latter for activating protective devices during a grid fault. The short-term current limit is higher than the normal current limit and is available for a limited time (some seconds).

The limits are hardware specific. The normal current limit is active in all control modes. The short-term current injection limit is available only in grid forming modes.

The short-term current injection capability is illustrated in Figure 17. It enables the Grid Converter to supply intermittent current above the normal current limit. This way the converter can, for example, supply short circuit current to trigger protective devices, so that the selectivity and correct operation of the system protection can be guaranteed. During a short-term current injection event, the converter supplies current against an elevated current limit until the fault is cleared, or the pre-defined injection time is exceeded. If the grid fault is cleared, normal operation continues without interruption. If the fault is not cleared within the pre-defined time, it triggers the ShortTermCurrentInjection fault (0x21FF). This feature is enabled by default, but if required, it can be disabled with P1.4.9.1 Short Term Current Enabled. By default, the active current limits can also be adjusted internally based on the grid frequency. This function can be disabled with P1.4.7.1 Enable Freq. Based Current Limit.

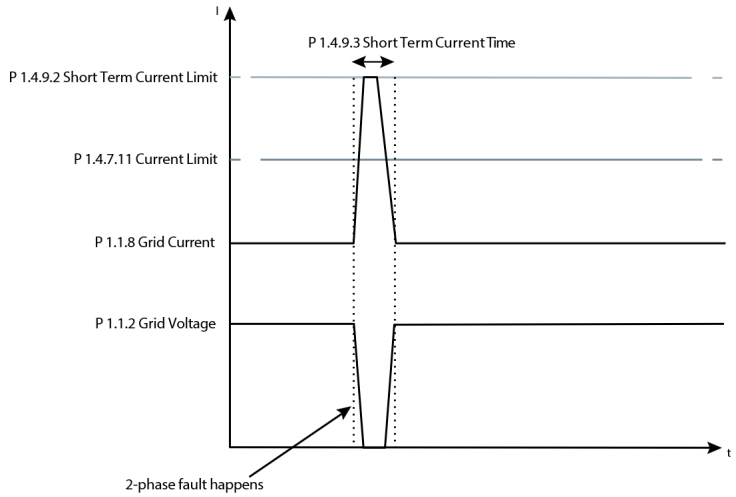

2.3.3.1 2873 Short Term Current Enabled

Enables the short-term current injection function.

The following are the selections for the parameter.

0 Disabled

1 Enabled.

2.3.3.2 2866 Short Term Current Limit %

Maximum current for short-term current injection in % of grid nominal current.

2.3.3.3 2867 Short Term Current Time s

Maximum time for short-term current injection in seconds.

2.3.3.4 2917 Short Term Current Mode

Select the short-term current injection mode:

The following are the selections for the parameter.

0 No reset.

Internal current limit ramped to Short Term Current Limit.

1 Reset before ramping.

Current limit is reset to 0 before ramped up to Short Term Curren Limit.

2 Automatic reset.

Reset if the power flow before the short circuit is from grid to DC-link. No reset if power flow is from DC-link to grid.

2.3.3.5 5097 Short Term Current Switching Freq. Hz

Minimum switching frequency during short-term current injection.

7.3.4. DC-Link Voltage Limiters

The availability of DC-link overvoltage and undervoltage controls is outlined in Table 3. They prevent DC-link voltage going out of range due to mismatches in power demand and delivery. The overvoltage and undervoltage controllers can be enabled separately. When enabled, the control starts when the actual voltage exceeds the activation limit and tries to limit the input/output power by changing the frequency to keep the DC voltage within limits. The limits can be given by parameter or through the fieldbus. The parameters of overvoltage and undervoltage controllers are given in percentages of internal default values. The DC voltage control mode (AFE) controls the DC-link voltage in a closed loop and therefore separate minimum and maximum controllers are not used.

Droop control can be used to ensure load sharing between parallel-connected converters with individual control units when voltage limiting control is active. The droop gain defines the percentage of the voltage limit level change as a function of the percentage of the current. The filter time constant for active current used in drooping can be parametrized. The parameters are the same that are used for DC-link voltage droop control in DC voltage control mode.

Multiple regulators can be active simultaneously and their statuses are shown in the Regulator status word. Note: the activation of a limit controller (overvoltage, for example) immediately after start is not prohibited, unlike in typical motor control applications.

$$Internal\ Ref.Scaling = \frac{DC-link\ Nominal\ Voltage * Transformer\ Grid\ Side\ Voltage}{\sqrt{2} * Grid\ Nominal\ Voltage * Transformer\ Converter\ Side\ Voltage}$$

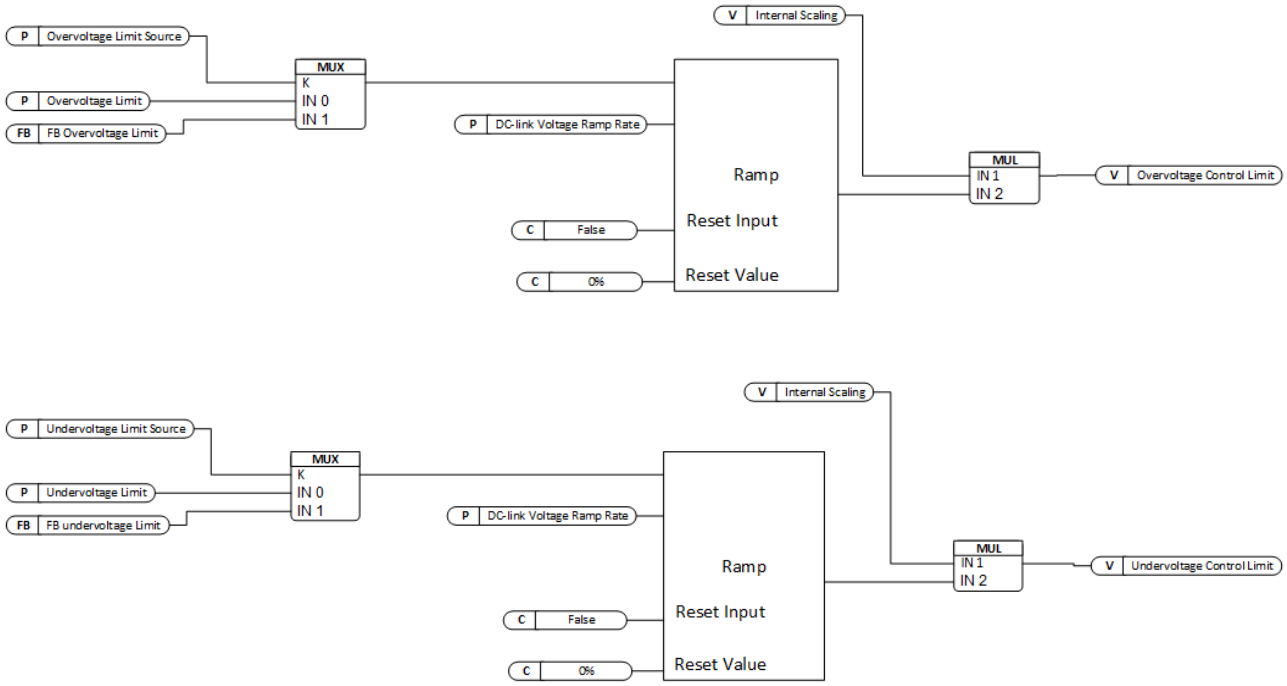

7.3.4.1.Undervoltage limit controller

2.3.4.1.1 1809 Undervoltage Control

Enables the DC-link undervoltage controller.

The following are the selections for the parameter.

0 Disabled

1 Enabled.

2.3.4.1.2 2900 Undervoltage Limit Source

Select the source for the DC-link undervoltage controller limit.

The following are the selections for the parameter.

0 Parameter

1 Fieldbus Reference

2.3.4.1.3 2901 Undervoltage Limit %

Set the DC-link undervoltage limit in % of the DC-link nominal voltage.

2.3.4.1.4 5852 DC-link Undervoltage Limit Ref. Analog Input

Select the analog input (terminal or fixed percentage value) for the DC-link undervoltage controller limit.

2.3.4.1.5 5853 Undervoltage Limit Analog Input Max

Set the maximum value for scaling the undervoltage limit analog input signal.

2.3.4.1.6 5854 Undervoltage Limit Analog Input Min

Set the minimum value for scaling the overvoltage limit analog input signal.

7.3.4.2.Overvoltage limit controller

2.3.4.2.1 1802 Overvoltage Control

Enables the DC-link overvoltage controller.

The following are the selections for the parameter.

0 Disabled

1 Enabled.

2.3.4.2.2 2897 Overvoltage Limit Source

Select the source for the DC-link overvoltage controller limit.

The following are the selections for the parameter.

0 Parameter

1 Fieldbus Reference

2.3.4.2.3 2898 Overvoltage Limit %

Set the DC-link overvoltage limit in % of the DC-link nominal voltage.

2.3.4.2.4 5849 DC-link Overvoltage Limit Ref. Analog Input

Select the analog input (terminal or fixed percentage value) for the DC-link overvoltage controller limit.

2.3.4.2.5 5850 Overvoltage Limit Analog Input Max

Set the maximum value for scaling the overvoltage limit analog input signal.

2.3.4.2.6 5851 Overvoltage Limit Analog Input Min

Set the minimum value for scaling the overvoltage limit analog input signal.

7.3.4.3.Undervoltage limit controller

2.3.5.1 4972 DC-link Current Limit Enable

Enable Limits for DC-link current control.

2.3.5.2 4973 DC-link Current Limit Source

Select the DC-link current Limit source.

2.3.5.3 4974 DC-link Current Pos.Direction Limit

Set the DC-link current limit in % of the DC-link nominal current for positive direction. To set the convention for the direction, refer to parameter No 2947.

2.3.5.4 4975 DC-link Current Neg.Direction Limit

Set the limit for negative direction DC-link current in % of the DC-link nominal current. To set the convention for the direction, refer to parameter No 2947.

7.4. I/O Inputs

7.4.1. I/O Digital Inputs

2.4.1.1 103 Run Enable Input

Select an input for enabling the converter to run. Run Enable is a mandatory signal for the converter to run. If removed in the run state then it will stop the converter and the converter will not go into run state without issuing this signal back.

2.4.1.2 4557 External Event 1 Input

Select an input for activating the external warning/fault 1.

2.4.1.3 4560 External Event 2 Input

Select an input for activating the external warning/fault 2.

2.4.1.4 2400 Cooling Monitor Input

Select an input for the cooling monitor signal. Cooling Monitor warning/fault is activated when this input becomes FALSE.

2.4.1.5 4513 Force I/O Control Input

Select an input for forcing the control place to I/O.

2.4.1.6 4511 Force FB Control Input

Select an input for forcing the control place to Fieldbus.

2.4.1.7 200 I/O Start Input

Select an input for starting the unit when the active control place is I/O Control.

2.4.1.8 201 I/O Stop Input

Select an input for stopping the unit when the active control place is I/O Control. Stop is activated when this input becomes FALSE.

2.4.1.9 203 I/O Reset Input

Select an input for the warning/fault reset when the active control place is I/O Control. The dependence on control place is selected based on Control Place Independent Reset (No. 109).

2.4.1.10 4728 Switch On Enable Input

Select a digital input for enabling the converter to force open the main circuit breaker if the signal becomes low. The converter will not start if the Switch On Enable Input is low.

2.4.1.11 6567 Pre Charge Request Inp.

Set the digital input for starting the pre-charging. This input will start the pre-charging and the main circuit breaker will close based on the closing mode.

2.4.1.12 6557 MCB Close Enable Input

Set the digital input for main circuit breaker closing enable. Main circuit breaker will not close without this signal. If removed in the run state, then it will open the main circuit breaker. The converter will not go into the run state without this signal.

2.4.1.13 6552 MCB Feedback Close Input

Note: Not applicable for String PCS 300 kVA. See chapter 3.7 iC7-Hybrid String PCS 300 kVA hardware parameters.

Set the digital input for main circuit breaker closing feedback.

2.4.1.14 6553 MCB Feedback Open Input

Note: Not applicable for String PCS 300 kVA. See chapter 3.7 iC7-Hybrid String PCS 300 kVA hardware parameters.

Set the digital input for main circuit breaker opening feedback.

2.4.1.15 6554 MCB Tripped Input

Set the digital input for main circuit breaker tripped feedback.

2.4.1.16 5055 Freq. Reset Input

Set the digital input for grid frequency reference reset.

2.4.1.17 5054 Freq. Decrease. Input

Set the digital input for grid frequency reference decrease.

2.4.1.18 5053 Freq. Increase. Input

Set the digital input for grid frequency reference increase.

2.4.1.19 5071 Voltage Reset Input

Set the digital input for grid voltage reference reset.

2.4.1.20 5070 Voltage Decr. Input

Set the digital input for grid voltage reference decrease.

2.4.1.21 5069 Voltage Incr. Input

Set the digital input for grid voltage reference increase.

2.4.1.22 212 Quick Stop Input

Select an input for the Quick Stop function. Quick Stop is activated when this input becomes FALSE. In addition to stopping the unit, Quick Stop will open the main circuit breaker (if controlled by the converter) irrespective of the selected response.

2.4.1.23 5104 Quick Stop Input 2

Select an input for the Quick Stop function. Quick Stop is activated when this input becomes FALSE. In addition to stopping the unit, Quick Stop will open the main circuit breaker (if controlled by the converter) irrespective of the selected response.

2.4.1.24 127 AC Surge Prot. Device Input

Select an input for AC side surge protection device. Ac side surge protection warning is active when this input is FALSE.

2.4.1.25 128 DC Surge Prot. Device Input

Select an input for DC side surge protection device. Dc side surge protection warning is active when this input is FALSE.

2.4.1.26 5779 DC Ground Fault Input

Selects the type of DC earth fault detection method used.

7.4.2. I/O Analog Inputs

2.4.2.7 6142 DC-link Current Ref. Analog Input

Select the analog input (terminal or as a percentage) for the DC-link current reference.

2.4.2.8 7694 DC-link Power Ref. Analog Input

Select the analog input (terminal or as a percentage) for the DC-link power reference.

7.5. I/O Outputs

7.5.1. General Digital Outputs

The following signals can be used to configure digital outputs:

2.5.1.1 205 Ready Output

Ready Output can be used to configure a digital output to indicate that the converter is in ready state. Ready state requires that all the bits of readout 5.1.13 Grid Ctrl. Ready Status Word are true, and the main circuit breaker closed feedback is true.

2.5.1.2 206 Run Output

Run Output can be used to configure a digital output to indicate that the converter is in run state.

2.5.1.3 208 Static Fault Output

Static Fault Output can be used to configure a digital output to indicate that one or multiple faults are active. The indication stays active until all the faults have been cleared.

2.5.1.4 209 Static Warning Output

Static Warning Output can be used to configure a digital output to indicate that one or multiple warnings are active. The indication stays active as long as all the warnings are active.

2.5.1.5 5180 Toggling Fault Output

Toggling Fault Output can be used to configure a digital output to indicate that one or multiple faults are active. The indication becomes active (high) when a single fault is active. Every successive fault toggles the indication down to inactive (low) state for 1 second and brings it back up to active state again. The indication stays active as long as a fault is active.

2.5.1.6 5181 Toggling Warning Output

Toggling Warning Output can be used to configure a digital output to indicate that one or multiple warnings are active. The indication becomes active (high) when a single warning is active. Every successive warning toggles the indication down to inactive (low) state for 1 second and brings it back up to active state again. The indication stays active as long as a warning is active.

2.5.1.7 5193 FB CTW Bit 12 Output

Fieldbus control word bit 12 can be used to control a digital output. This output can be configured into a digital output indicating the status of the fieldbus control word bit 12.

2.5.1.8 5194 FB CTW Bit 13 Output

Fieldbus control word bit 13 can be used to control a digital output. This output can be configured into a digital output indicating the status of the fieldbus control word bit 13.

2.5.1.9 5198 FB CTW Bit 14 Output

Fieldbus control word bit 14 can be used to control a digital output. This output can be configured into a digital output indicating the status of the fieldbus control word bit 14.

2.5.1.10 5191 FB CTW Bit 15 Output

Fieldbus control word bit 15 can be used to control a digital output. This output can be configured into a digital output indicating the status of the fieldbus control word bit 15.

2.5.1.11 5157 DC-link Voltage Superv. Output

Select an output for the status of the DC-link Voltage Supervision. Signals when the DC-link voltage exceeds Param. DC-link Voltage Superv. Limit (No. 5158).

2.5.1.12 5158 DC-link Voltage Superv. Limit V

Set the DC-link Voltage Supervision Limit for monitoring the DC-link Voltage with a digital output.

2.5.1.13 5178 Local Control Active Output

Select an output terminal indicating that the converter is in local control.

2.5.1.14 5177 I/O Control Active Output

Select an output terminal indicating that the converter is in I/O control.

2.5.1.15 5197 Fieldbus Control Active Output

Select an output terminal indicating that the converter is in fieldbus control.

2.5.1.16 5189 Active Event 1 Output

Select an output for monitoring the warning/fault activation status (output high = exception active).

2.5.1.17 5188 Event 1 Number

Set the number of the event to be assigned for Active Event 1 output.

2.5.1.18 5190 Active Event 2 Output

Select an output for monitoring the warning/fault activation status (output high = event active).

2.5.1.19 5290 Event 2 Number

Set the number of the event to be assigned for Active Event 2 output.

2.5.1.20 5254 Limit Supervision 1 Output

Select the output terminal for the Limit Supervision 1 active - indication.

2.5.1.21 217 No Warning Output

Select an output for the No Warning Active signal.

2.5.1.22 218 No Fault Output

Select an output for the No Fault Active signal.

2.5.1.23 125 Local Control Forcing Requested Output

Select an output terminal for the indication that the control place forcing to Local Control has been requested with REM/LOC button of control panel (output high = requested).

2.5.1.24 121 I/O Forcing Requested Output

Select an output terminal for the indication that the control place forcing to I/O Control has been requested (output high = requested).

2.5.1.25 120 FB Forcing Requested Output

Select an output terminal for the indication that the control place forcing Fieldbus Control has been requested (output high = requested).

2.5.1.26 6563 Pre-Charge Request Output

Set pre-charging command digital output.

2.5.1.27 6569 Pre-charge Allowed Output

Set the digital output terminal for pre-charging allowed.

2.5.1.28 6551 MCB Close Output

Set the digital output for main circuit breaker closing.

2.5.1.29 6555 MCB Close Pulse Output

Set the digital output for main circuit breaker closing pulse command.

2.5.1.30 6556 MCB Open Pulse Output

Set the digital output for main circuit breaker opening pulse command.

7.5.2. Delayed Digital Outputs

2.5.2.1 8032 Delayed Output 1 Content Sel.

Select the function for the delayed digital output 1.

The following are the selections for the parameter.

0 Not used

1 Drive Ready Status

Drive ready status signal. True = Drive ready, False = Drive not ready.

2 Drive Running Status

Drive running status signal. True = Drive is running, False = Drive is not running.

3 Warning Active (Static)

Static warning active status signal. True = One or more warnings are active, False = No warnings are active.

4 Fault Active (Static)

Static fault active status signal. True = One or more faults are active, False = No faults are active.

5 Local Control Active

Local control active status signal. True = Converter is controlled from I/O control place, False = Converter is not controlled from I/O control place.

6 I/O Control Active

I/O control active status signal. True = Converter is controlled from I/O control place, False = Converter is not controlled from I/O control place.

7 FB Control Active

Fieldbus control active status signal. True = Drive is controlled from Fieldbus control place, False = Drive is not controlled from Fieldbus control place.

8 Warning Active (Toggled)

Toggled warning active status signal. This signal will toggle down for 1 second, whenever a new warning is activated while another warning is already active.

9 Fault Active (Toggled)

Toggled fault active status signal. This signal will toggle down for 1 second, whenever a new fault is activated while another fault is already active.

10 CTW Bit 12

Fieldbus Control word - bit 12.

11 CTW Bit 13

Fieldbus Control word - bit 13.

12 CTW Bit 14

Fieldbus Control word - bit 14.

13 CTW Bit 15

Fieldbus Control word - bit 15.

14 DC-link Voltage Supervision

2.5.2.2 8036 Delayed Output 1 On Delay

Set the on delay for the delayed digital output 1.

2.5.2.3 8038 Delayed Output 1 Off Delay

Set the off delay for the delayed digital output 1.

2.5.2.4 8040 Delayed Output 1 Output

Select the output for transmitting the delayed digital output 1.

2.5.2.5 8033 Delayed Output 2 Content Sel.

See 2.5.2.1 8032 Delayed Output 1 Content Sel

2.5.2.6 8037 Delayed Output 2 On Delay

Set the on delay for the delayed digital output 2.

2.5.2.7 8039 Delayed Output 2 Off Delay

Set the off delay for the delayed digital output 2.

2.5.2.8 8041 Delayed Output 2 Output

Select the output for transmitting the delayed digital output 2.

7.5.3. Analog outputs

The following signals can be used to configure the analog output:

2.5.3.1 2450 Active Current Output

Active current in percentage of the nominal grid current can be used to configure the analog output. The scaling for the active current is

-200%...200%, which is mapped to a 0–1 value for the analog output function block.

2.5.3.2 2451 Absolute Active Current Output

Absolute active current in percentage of the nominal grid current can be used to configure the analog output. The scaling for the absolute active current is 0%...100%, which is mapped to a 0–1 value for the analog output function block.

2.5.3.3 2452 Reactive Current Output

Reactive current in percentage of the nominal grid current can be used to configure the analog output. The scaling for the reactive current is -200%...200%, which is mapped to a 0–1 value for the analog output function block.

2.5.3.4 2453 Output Current Output

Converter output current in percentage of the nominal grid current can be used to configure the analog output. The scaling for the output current is -200%...200%, which is mapped to a 0–1 value for the analog output function block.

2.5.3.5 2457 Power Factor Output

The power factor value can be used to configure the analog output. The scaling for the power factor is -1...1 which is mapped to a 0– 1 for the analog output function block.

2.5.3.6 2456 Absolute Active Power Output

Absolute active power in percentage of the nominal grid power can be used to configure the analog output. The scaling for the absolute active current is 0%...100% which is mapped to a 0–1 value for the analog output function block.

2.5.3.7 2455 Active Power Output

The active power readout can be used to configure the analog output. The scaling for active power is based on the parameters P 5.26.4.8 Active Power Output Max. and P 5.26.4.9 Active Power Output Min., and the scaling is mapped to a 0–1 value for the analog output function block.

2.5.3.8 2458 Active Power Output Max. kW

Set the maximum active power value for analog output scaling maximum.

2.5.3.9 2459 Active Power Output Min. kW

Set the minimum active power value for analog output scaling minimum.

2.5.3.10 2454 DC-link Voltage Output

The DC voltage readout can be used to configure the analog output. The scaling for DC voltage is based on the parameters P 5.26.4.11 DC Voltage Output Max. and P 5.26.4.12 DC Voltage Output Min., and the scaling is mapped to a 0–1 value for the analog output function block.

2.5.3.11 2460 DC-link Voltage Output Max. %

Set the maximum DC-link voltage value for analog output scaling maximum.

2.5.3.12 2461 DC-link Voltage Output Min. %

Set the minimum DC-link voltage value for analog output scaling to a minimum.

2.5.3.13 2462 Main Fan Speed Output

The main fan speed readout can be used to configure the analog output. The scaling for main fan speed is based on the parameters P

5.26.4.14 Main Fan Speed Output Max. and P 5.26.4.15 Main Fan Speed Output Min., and the scaling is mapped to a 0–1 value for the analog output function block.

2.5.3.14 2463 Main Fan Speed Output Max. rpm

Set the maximum main fan speed value for analog output scaling maximum.

2.5.3.15 2464 Main Fan Speed Output Min. rpm

Set the minimum main fan speed value for analog output scaling minimum.

7.6. Start and Stop Settings

7.6.1. Start Settings

The start and stop settings group define the parameters which must be configured to define the start and stop behavior of the converter. There are 4 start and run interlocks. These are Run Enable, Switch On Enable, MCB Close Enable and No Quick Stop Active. All the interlocks need to be true before the converter can start modulation. If any of the interlocks are removed in the run state, then it stops the converter.

2.6.1.1 4718 Start Delay s

Set a delay to start the converter. The parameter can be set if there are multiple converters connected on the same DC bus to delay the start.

2.6.1.2 103 Run Enable Input

Select an input for enabling the converter to run. Run Enable is a mandatory signal for the converter to run. If removed in the run state, then it will stop the converter and the converter will not go into run state without issuing this signal back.

2.6.1.3 4728 Switch On Enable Input

Select a digital input for enabling the converter to force open the main circuit breaker if the signal becomes low. The converter will not start if the Switch On Enable Input is low.

2.6.1.4 6791 Ramp Stop

Set the rate to ramp down converter's power upon receiving a stop command. To disable ramping set the parameter value to 0.

7.6.2. Quick Stop

The purpose of quick stop is to stop the converter, regardless of the operation condition. A common use case for quick stop is to allow the converter to make a controlled stop when the Emergency Stop button is pressed. Usually, there are a few seconds to make a controlled stop before an emergency stop forces all breakers to open and makes the system electrically safe. In Grid Converter, modulation is stopped immediately and the MCB is opened.

2.6.2.1 212 Quick Stop Input

Select an input for the Quick Stop function. Quick Stop is activated when this input becomes FALSE. In addition to stopping the unit, Quick Stop will open the main circuit breaker (if controlled by the converter) irrespective of the selected response.

2.6.2.3 5104 Quick Stop Input 2

Select an input for the Quick Stop function. Quick Stop is activated when this input becomes FALSE. In addition to stopping the unit, Quick Stop will open the main circuit breaker (if controlled by the converter) irrespective of the selected response.

2.6.2.2 4587 Quick Stop Response

Select the response to a Quick Stop event. Regardless of the selected response, in addition to stopping the unit, the Quick Stop function will open the main circuit breaker (if controlled by the converter).

0 No response

The event is ignored.

1 Info

The event is logged in the event log.

3 Warning

The converter issues a warning.

10 Fault

The converter issues a fault, and stops the modulation.

11 Fault, Open MCB

The converter issues a fault, stops the modulation, and opens the MCB, if it is controlled by the converter

7.6.3. Pre-Charging

2.6.3.1 6563 Pre-Charge Request Output

Note: Not applicable for String PCS 300 kVA. See chapter 3.7 iC7-Hybrid String PCS 300 kVA hardware parameters.

Set the digital output for the pre-charging command.

2.6.3.2 6566 Pre-Charge Ready Level %

Set the DC-link voltage level in % of nominal voltage above which the pre-charging becomes ready. With battery voltage measurement the level is relative to the battery voltage.

2.6.3.3 6567 Pre Charge Request Inp.

Set the digital input for starting the pre-charging. This input will start the pre-charging and the main circuit breaker will close based on the closing mode.

2.6.3.4 6569 Pre-charge Allowed Output

Set the digital output terminal for pre-charging allowed.

2.6.3.5 5510 Pre-Charge Allowed Level %

Set the level (DC Voltage in % of the nominal DC voltage) below which pre-charging is allowed.

7.6.4. Main Circuit Breaker

2.6.4.1 6551 MCB Close Output

Note: Not applicable for String PCS 300 kVA. See chapter 3.7 iC7-Hybrid String PCS 300 kVA hardware parameters.

Set the digital output for main circuit breaker closing. This is a state-based output which can be used for digital output terminals.

2.6.4.2 6552 MCB Feedback Close Input

Set the digital input for main circuit breaker closing feedback.

2.6.4.3 6553 MCB Feedback Open Input

Set the digital input for main circuit breaker opening feedback.

2.6.4.4 6554 MCB Tripped Input

Set the digital input for main circuit breaker tripped feedback.

2.6.4.5 6555 MCB Close Pulse Output

Note: Not applicable for String PCS 300 kVA. See chapter 3.7 iC7-Hybrid String PCS 300 kVA hardware parameters.

Set the digital output for main circuit breaker closing pulse command. This is a pulse-based output and can be used for relay output terminals.

2.6.4.6 6556 MCB Open Pulse Output

Note: Not applicable for String PCS 300 kVA. See chapter 3.7 iC7-Hybrid String PCS 300 kVA hardware parameters.

Set the digital output for main circuit breaker opening pulse command. This is a pulse-based output and can be used for relay output terminals.

2.6.4.7 6557 MCB Close Enable Input

Set the digital input for main circuit breaker closing enable. Main circuit breaker will not close without this signal. If removed in the run state, then it will open the main circuit breaker. The converter will not go into the run state without this signal.

2.6.4.8 6558 MCB Feedback Fault Delay s

Delay in seconds after which the main circuit feedback fault becomes active when the feedback is missing.

2.6.4.9 6559 MCB Closing Mode

Set the main circuit breaker closing mode configuration if the breaker is configured to be closed by the application.

The following are the selections for the parameter.

0 DC-link Pre Charge Ready

Main circuit breaker will close when the Pre-Charge Ready signal sees a rising edge. If the breaker is opened and the DC-link Pre-Charge Ready stays high, then it will require discharging of the DC-link and charging it back to allow the application to close the breaker.

1 Start Command

Main circuit breaker will only close on the start command. With this selection, the main circuit breaker is closed first and once the feedback of the breaker is true then the converter can start modulation.

2 DC-link Pre Charge Ready or Start Command

Either of selection 0 or 1 can close the main circuit breaker.

3 LCL Filter Energized

Main circuit breaker is closed only when the LCL filter is energized first. The energization will require a voltage measurement board behind the main circuit breaker connected and activated.

2.6.4.10 6560 MCB Opening Mode

Set the main circuit breaker opening mode if the breaker is configured to be opened by the application.

The following are the selections for the parameter.

0 DC Voltage Level

Main circuit breaker will open once the DC-link voltage goes below the Pre-charge Ready Level.

1 Stop Command or DC Voltage Level

Main circuit breaker will only open either on stop command or when the DC-link voltage goes below the Pre-charge Ready Level.

2 Fault Active or DC Voltage Level

Main circuit breaker will open on any fault activation or when the DC-link voltage goes below the Pre-charge Ready Level.

3 Fault Active or Stop Command or DC

Main circuit breaker will open if any of the conditions from selections 0,1 or 2 are fulfilled.

7.6.5. LCL-Filter Energization

2.6.5.1 5161 Filter Voltage Ramp Time s

Set the ramp time (0 V to nominal grid voltage) for the filter voltage. The ramping is performed during LCL-filter energization when this is controlled by the converter.

2.6.5.2 5162 Max. Filter Energization Time s

Set maximum allowed time for filter energization. Filter energization will fail and issue a fault if the energization is not completed before the maximum time elapsed from the start request.

7.7. Control Places

The Grid Converter application features four different control places for determining how basic converter commands and references are interfaced. These control places are the MyDrive® Insight (PC Control), Local Control (via control panel), Fieldbus Control and I/O Control.

Selection:

There are two methods for selecting which control place is active, or in other words in command of the converter. The first is a simple parameter selection, while the second is a set of signals that can be used to force or request for a specific control place to be in command.

Commands:

A control place is a source for basic control commands (start, stop, reset, and so on). When operating for instance in I/O control, the converter cannot be started from the local or fieldbus control places. Control places do not dictate all possible commands. Note that specific features such as Quick Stop can be used regardless of the control place and must be configured separately.

Control Place Settings

This group contains general control place settings that mainly have to do with control place selection. The figure below presents the control place selection chain diagram. The default method for choosing the control place is by using the parameter No. 114 Control Place Selection. It can be used to select the active control place between Local, Fieldbus and I/O control.

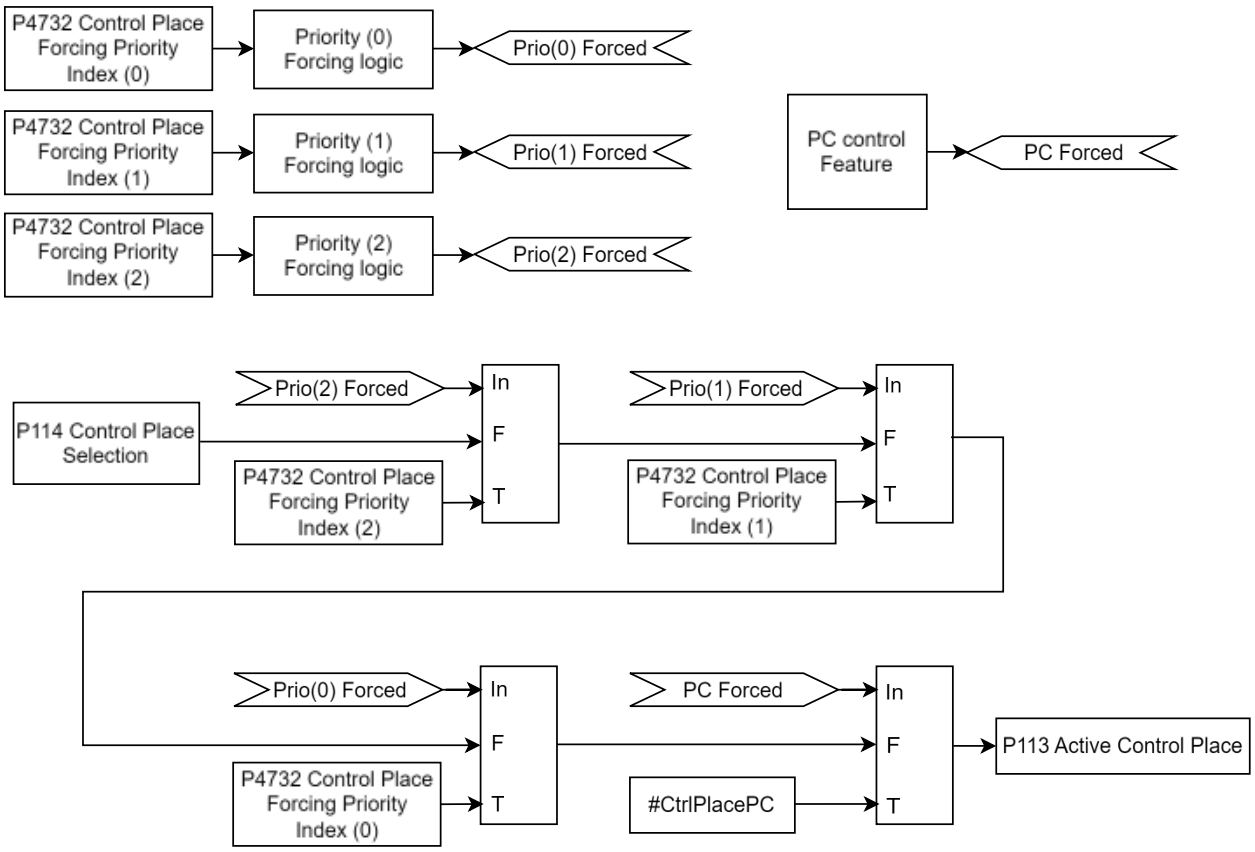

The second option for control place selection is to use control place forcing signals, which will override the selection made with the parameter, and can be used to swap between different control places, for

example via external push buttons or switches. The forcing signals for Fieldbus and I/O control can be mapped to digital inputs or fieldbus, and the Local control forcing is activated with the REM/LOC button of the control panel.

The priority order for the forceable control places is configured with parameter No. 4732. The priority order affects the final control place selection if two or more control places are forced on simultaneously. For example: if Fieldbus is selected for highest priority with Index-0, and I/O for the next highest priority with index-1, and both control places are forced on simultaneously, fieldbus will be selected as the active control place. After Fieldbus forcing is removed the control place will fall to I/O because it has higher priority than the parameter selection.

The only control place which can take over the control from any other control place regardless of forcing inputs is the MyDrive® Insight. Control is overtaken by requesting it via the tool itself. By default, the converter uses the following control place priority order:

MyDrive® Insight > Local Control > I/O > Fieldbus > Parameter Selection

Forcing can be further configured with parameter No. 1972 which defines whether each forcing signal is treated as a state sensitive or toggled signal.

The user can also use parameter No. 4800 to define how the converter should behave when an active control place releases control. The options are to either release control immediately or only if another control place requests control.

When a control place is changed, the converter will either stop or continue operating (modulation) based on the settings defined with parameters No. 108, No. 5112, and No. 5111, respectively for each control place.

7.7.1. Control Place Settings

2.7.1.1 114 Control Place Selection

Select the active control place.

The following are the selections for the parameter.

0 PC control

1 Local Control

2 Fieldbus control

3 I/O Control

2.7.1.2 4511 Force FB Control Input

Select an input for forcing the control place to Fieldbus.

2.7.1.3 4513 Force I/O Control Input

Select an input for forcing the control place to I/O.

2.7.1.4 1972 Control Place Forcing Mode

Select whether each control place forcing signal is treated as a state sensitive or a toggled signal.

The following are the selections for the parameter.

0 FB: State | I/O: State

1 FB: Toggle | I/O: State

2 FB: State | I/O: Toggle

3 FB: Toggle | I/O: Toggle

2.7.1.5 109 Control Place Independent Reset

Enable faults to be reset from all control places.

The following are the selections for the parameter.

0 Disabled

1 Enabled

2.7.1.6 4800 Control Place Release Mode

Select the action after the control place is released from the forced control places, as well as from control panel or PC control. When set to "Change After Release" the control place is changed after releasing to other forced place highest in priority order, or in case no forced places are used, to the place defined with parameter “Control Place Selection”. When set to "Retain After Release" the control place is not changed after releasing, but only after the user changes the control place by forcing or from parameter “Control Place Selection”.

The following are the selections for the parameter.

0 Retain After Release

Control place is retained after releasing.

1 Change After Release

Control place is changed after releasing.

2.7.1.7 4732 Control Place Forcing Priority

Set the control place priority when using control place forcing inputs. The priority is specified in decreasing order. Therefore, in case multiple control places are requested simultaneously,

the selection made with Index 0 prevails on the selection made with Index 1, and so on. If a control place is not assigned any priority, its forcing signal is disabled.

The following are the selections for the parameter.

0 PC control

1 Local Control

2 Fieldbus control

3 I/O Control

7.7.2. Local Control

2.7.2.1 107 Local Control Mode

Select restrictions of local control by the control panel.

The following are the selections for the parameter.

0 Allow Local Control

Local mode from control panel is enabled.

1 Deny Local Start

Start in local mode from control panel is disabled.

2 Deny Local Control

Local mode from control panel is disabled.

2.7.2.2 108 Continue Operation in Local Control

Select whether the start request is retained when the converter is running, and the control place is changed to local control.

The following are the selections for the parameter.

0 Disabled

1 Enabled

7.7.3. I/O Control

2.7.3.1 200 I/O Start Input

Select an input for starting the unit when the active control place is I/O Control.

2.7.3.2 201 I/O Stop Input

Select an input for stopping the unit when the active control place is I/O Control. Stop is activated when this input becomes FALSE.

2.7.3.3 203 I/O Reset Input

Select an input for the warning/fault reset when the active control place is I/O Control. The dependence on control place is selected based on Control Place Independent Reset (No. 109).

2.7.3.4 213 I/O Start Mode

Select whether start commands for I/O control are state, rising edge or pulse sensitive.

The following are the selections for the parameter.

0 State High Start

Start command remains as long as input is true.

1 Rising Edge Start

Start command is set when input becomes true and remains latched until stop command is given or input becomes false. Start command does not remain latched over a stop, even if start input is kept true.

2 High Pulse Start

Start command is set when input becomes true and remains latched until stop command is given.

2.7.3.5 5111 Continue Operation in I/O Control

Select whether the start request is retained when the drive is running and the control place is changed to I/O, while using edge-sensitive start modes. Note that any active stop command or auxiliary function such as quick stop may still prohibit continuing operation.

The following are the selections for the parameter.

0 Disabled

1 Enabled

7.7.4. Fieldbus Control

2.7.4.1 5112 Continue Operation in Fieldbus Control

Select whether the start request is retained when the drive is running and the control place is changed to fieldbus. Note that any active stop command or auxiliary function such as quick stop may still prohibit continuing operation. Note also that continuation is possible only if the start is requested from fieldbus before the control place is changed to it.

The following are the selections for the parameter.

0 Disabled

1 Enabled

2.7.4.2 5114 Fieldbus Start Mode

Select whether start commands for Fieldbus Control are state or rising-edge sensitive.

The following are the selections for the parameter.

0 State High Start

Start command remains as long as input is true.

1 Rising Edge Start

Start command is set when input becomes true and remains latched until stop command is given or input becomes false. Start command does not remain latched over a stop, even if start input is kept true.

7.8. Converter Control

7.8.1. Modulation

This group contains parameters for fine-tuning modulation settings.

2.8.1.1 2920 Switching Frequency kHz

Set the switching frequency. Note that the actual switching frequency is regulated by the converter itself, and it may be derated by some protections function.

2.8.1.2 5093 Modulator Options

Advanced modulator options.

The following are the selections for the parameter.

0 Disable compensation of non-linearities.

1 Disable deadtime compensation based on feedback.

2 Use filtered DC voltage over whole speed range.

3 Prohibit pulse dropping when reaching voltage ceiling.

4 Optimized minimum pulse logic for carrier synchronization.

2.8.1.3 5100 Modulator Type

Select the modulator type.

The following are the selections for the parameter.

1 SVPWM

Standard Space Vector Pulse Width Modulation.

Use in special applications, where automatic change of PWM carrier frequency and modulation pattern might cause issues

Drive derating is required.

4 CMRPWM

The CMR modulator optimizes the common-mode voltage waveform.

Can be useful with certain drive configurations to minimize motor or generator voltage spikes.

The modulator does not support independent paralleling. If paralleling sync. is enabled (with param No. 9654) the modulator type is internally forced to Grid Converter.

Recommended selection for Active Front-End drives.

5 Grid Converter

The modulator optimizes the trade-off between losses and harmonics.

Recommended selection for most power conversion applications.

Modulation parameters are automatically set.

2.8.1.4 6518 Forward Voltage Compensation

Forward voltage drop of the converter. Value is proportional to hard-coded default value.

2.8.1.5 353 Common Mode Voltage Softening Angle

Angle for common mode voltage step softening in DPWM.

7.8.2. Advanced Grid Control

2.8.2.1 ***2868*** ***Active Current Kp*** ***%***

Set scaling of internally computed active current controller proportional gain.

2.8.2.2 ***2869*** ***Active Current Ti*** ***%***

Set scaling of internally computed active current controller integral time.

2.8.2.3 ***9659*** ***Grid PLL Tc*** ***s***

Time constant defining the bandwidth of the grid synchronization PLL.

2.8.2.4 ***2871*** ***Active Damping Kp*** ***%***

Scaling of internally computed active damping gain used to control LCL filter resonance.

2.8.2.5 ***2849*** ***Reactive Current Kp*** ***%***

Scaling of internally computed reactive current controller proportional gain.

2.8.2.6 ***2850*** ***Reactive Current Ti*** ***%***

Scaling of internally computed reactive current controller integral time.

2.8.2.7 ***9658*** ***Grid Control Options***

Shows the Grid Control Options Word. B0: Disable observer in control B1: Enable LCL filter pre-charging B2: Enable feedforward term.

2.8.2.8 ***9655*** ***Paralleling Sync. Run Kp***

Proportional gain of the PWM carrier synchronization control in run state.

2.8.2.9 ***9656*** ***Paralleling Sync. Stop Kp***

Proportional gain of the PWM carrier synchronization control in stop state.

2.8.2.10 ***9657*** ***Paralleling Sync. Shift Kp*** ***%***

Proportional gain of the common mode current control.

2.8.2.11 5098 Power Factor Sign Mode

Defines the sign convention of power factor monitoring signal. Power Factor reference has own sign conventions on grid code parameter group.

0 = Active power defines the sign of the Power Factor readout (IEC convention).

1 = Reactive power defines the sign of the Power Factor readout (IEEE convention).

Default setting depends on Converter Mode with 0 (IEC) for motor control and 1 (IEEE) for grid control.

The following are the selections for the parameter.

0 IEC Convention

1 IEEE Convention

Current/Power Positive Direction: From DC-Link to Grid

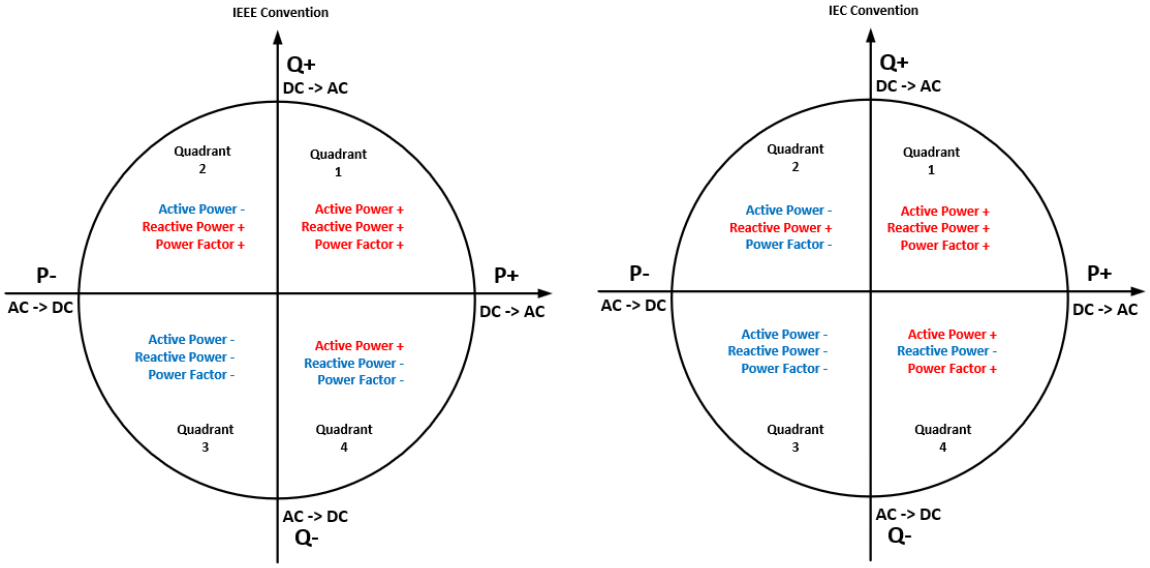

Current/Power Positive Direction: From Grid to DC-link

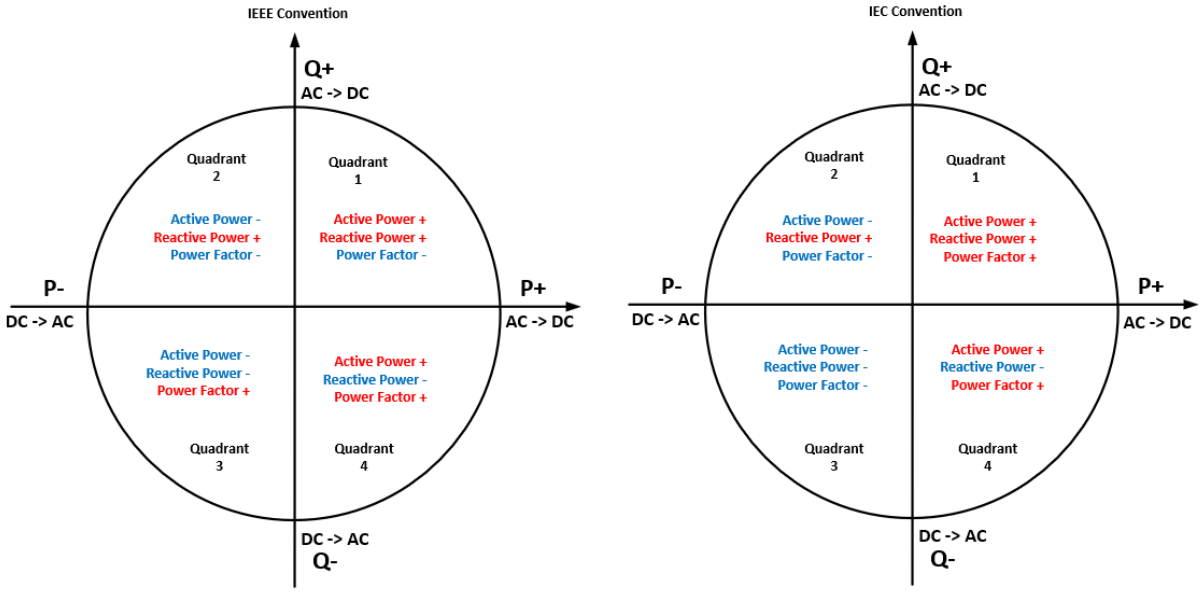

2.8.2.12 6510 Ac Voltage Control Kp %

Scaling of internally computed AC voltage control proportional gain.

2.8.2.13 6511 Ac Voltage Control Ti %

Scaling of internally computed AC voltage control integral time.

2.8.2.14 6512 PQ Mode Active Current Ctrl. Kp Hz

PQ control active current controller gain in Hz/GridNomCurrent.

2.8.2.15 6513 PQ Mode Active Current Ctrl. Ti s

PQ control active current controller integration time.

2.8.2.16 6514 PQ Mode Reactive Current Ctrl Ki %

PQ control reactive current controller integration gain in Pct.

2.8.2.17 6515 Virtual Impedance %

Time constant of dynamic virtual impedance.

2.8.2.18 6516 Virtual Impedance Tc s

Time constant of dynamic virtual impedance.

2.8.2.19 6517 Virtual Impedance Filt. Tc s

Time constant of low filtering of current used by virtual impedance.

2.8.2.20 6519 Harmonic Current Control Gain %

Set the value of gain for voltage harmonic resonant control.

2.8.2.21 2918 Short Term Current Options

2.8.2.22 6500 Neg. Seq. Current Control Kp %

Set negative sequence current control proportional gain.

2.8.2.23 6501 Neg. Seq. Current Control Ti %

Set negative sequence current control integration time.

2.8.2.24 6502 Neg. Seq. Voltage Control Kp %

Set negative sequence voltage control proportional gain.

2.8.2.25 6503 Neg. Seq. Voltage Control Ti %

Set negative sequence voltage control integration time.

2.8.2.26 4999 Harmonic Voltage Control Gain

Set the value of gain for voltage harmonic resonant control.

2.8.2.32 665 AC Voltage Feed Forward Kp

AC Voltage feedforward gain.

2.8.2.33 1020 AC Voltage High Limit

Limits converter output voltage, Set this considering grid code settings and instant voltage trip limit.

7.8.3. Advanced DC-Link Control

2.8.3.1 2902 DC-link Voltage Ctrl. Kp %

Scaling of internally computed DC-link voltage control proportional gain.

2.8.3.2 2903 DC-link Voltage Ctrl. Ti %

Scaling of internally computed DC-link voltage control integral time.

2.8.3.3 2907 DC-link Voltage Ctrl. Td %

Scaling of internally computed DC-link voltage control differential time.

2.8.3.4 5095 DC-link Voltage Droop. Tc s

Filtering time constant of active current when DC-link voltage drooping is used.

2.8.3.5 9661 DC-link Voltage Corr. Enable

2.8.3.6 9662 DC-link Voltage Corr. Ki

2.8.3.7 9663 DC-link Voltage Corr. Tc s

2.8.3.8 1803 Overvoltage Control Kp %

Set the scaling of the overvoltage control proportional gain.

2.8.3.9 1804 Overvoltage Control Ti %

Set the scaling of the overvoltage control integral time.

2.8.3.10 1805 Overvoltage Control Td %

Set the scaling of the undervoltage control proportional gain.

2.8.3.11 1806 Undervoltage Control Kp %

Set the scaling of the undervoltage control proportional gain.

2.8.3.12 1807 Undervoltage Control Ti %

Set the scaling of the undervoltage control integral time.

2.8.3.13 1808 Undervoltage Control Td %

Set the scaling of the undervoltage control derivation time.

7.8.4. Power Unit Settings

2.8.4.1 2835 Power Unit Enable Mask

Select which of the commissioned power units are enabled.

The value is given bitwise per each unit. Bit 0 corresponds to the first port in the Star coupler board, and bit 15 to the 16th port and so on. An active bit enables the corresponding power unit, and an inactive bit disables it.

This parameter is relevant only for drives with multiple power units, connected to the control board with the Star coupler board. Faulty or redundant power units can be disabled temporarily to allow running with reduced capacity. All internal protection functions adjust to the amount of enabled power units.

Warning 1

Depending on the system's hardware configuration, it may be necessary to galvanically isolate the disabled units and all associated filters from the system. Failing to do so may increase the risk of resonance and damage the rest of the system. Contact Danfoss technical support for further instructions before using this functionality.

Notice 1

This parameter cannot be edited when the converter is running.

Notice 2

After Factory Reset or Node Commissioning the drive will automatically set this parameter to activate the nominal number of power units starting sequentially from the first port of the Star coupler board. If the drive has several power units, but this parameter does not have the correct value at initial start, it is recommended to run Factory Reset and power-cycle the drive. This operation will reset the Power Unit Enable Mask to correspond with the nominal amount of power units.

2.8.4.2 6535 DC-link Voltage Measurement Corr. Gain %

Set the DC-link voltage measurement correction gain for parallel units.

2.8.4.3 6534 DC-link Voltage Measurement Corr. Offset V

Set the DC-link voltage measurement correction offset for parallel units.

2.8.4.4 2944 HF DC-link Filter Mode

Select the mode of the high-frequency filter in the DC link.

The following are the selections for the parameter.

0 Filter inactive

1 Filter active

7.8.5. Cooling Fan Control

Cooling fan control is only possible for the air cooled converters.

2.8.5.1 2932 Main Fan Minimum Speed %

Set the minimum speed of the main cooling fan.

7.8.6. LCL-Filter

2.8.6.1 2904 LCL Filter L1 µH

Set the converter side filter inductance.

2.8.6.2 2905 LCL Filter Cf µF

Set the filter capacitance.

2.8.6.3 2906 LCL Filter L2 µH

Set the grid side filter inductance.

7.9. Protection and responses

7.9.1. General setting

2.9.1.1 2927 Retry after Fault

Enables retry functionality (ride-through) functionality for the following fault type events. The number of retry attempts and the retry window depend on the event and the size and rating of the power unit.

The following are the selections for the parameter.

0 Disabled

1 Enabled

2.9.1.2 5131 Active Current Limit Warn. Preset

Set the (absolute) value the active current limits are ramped to when an event is active for which 'Warning, Current Lim. Ramp' is selected as a response. It is expressed in % of the grid nominal current.

2.9.1.3 5130 Active Current Limit Warn. Ramp Rate

Set the slope (absolute value) of the pos./neg. active current limit ramps which are performed when an event for which 'Warning, Current Lim. Ramp' is selected as a response is active. It is expressed in % of the grid nominal current per second. When set to -1, no ramp is performed.

7.9.2. Misc. Responses

2.9.2.1 2929 DC-link Voltage Ripple Response

Select the mode of excessive DC-link voltage ripple protection. Excessive voltage ripples are detected when the peak-to-peak amplitude of the DC voltage exceeds the converter's internal limit for too long a time. Both the limit and time depend on the power unit type and rating.

The following are the selections for the parameter.

0 Disabled

Effectively nothing is done when excessive rippling is detected.

1 Fault

After detecting excessive ripples for too long, the converter will issue a fault and stop modulation.

2 Automatically derate + Fault

After detecting excessive ripples, the converter will derate the maximum allowed output frequency.

If the derating does not reduce the rippling soon enough, the converter will issue a fault and stop modulation.

The derating is released if the ripple amplitude is reduced below the detection limit.

2.9.2.2 2941 LCL Fan Fail Response

Select the drive response to an LCL Fan Fail.

The following are the selections for the parameter.

0 No response

1 Info

The converter issues an info event.

3 Warning

The converter issues a warning event.

10 Fault

The converter issues a fault event and stops modulation.

11 Fault, Open MCB

The converter issues a fault event, stops modulation, and opens the main circuit breaker.

7.9.3. External Event

2.9.3.1 4557 External Event 1 Input

Select an input for the external event.

2.9.3.2 4559 External Event 1 Response

Select the response to an external event 1.

0 No response

1 Info

The converter issues an info event.

3 Warning

The converter issues a warning event.

10 Fault

The converter issues a fault event and stops modulation.

11 Fault, Open MCB T

The converter issues a fault event, stops modulation, and opens the main circuit breaker.

2.9.3.3 4560 External Event 2 Input

Select an input for the external event.

2.9.3.4 4562 External Event 2 Response

Select the response to an external event 2.

0 No response

1 Info

The converter issues an info event.

3 Warning

The converter issues a warning event.

10 Fault

The converter issues a fault event and stops modulation.

11 Fault, Open MCB

The converter issues a fault event, stops modulation, and opens the main circuit breaker.

2.9.3.5 5779 External DC Earth Fault Input

Selects the type of DC earth fault detection method used.

2.9.3.6 5780 External DC Earth Fault Response

Select the response to an external DC earth fault.

7.9.4. Cooling Monitor

The cooling monitor feature is relative for liquid cooled converters. It is designed to allow the converter to receive a single digital signal from the cooling unit when it experiences errors. The converter will then act as configured.

2.9.4.1 2400 Cooling Monitor Input

Select the input for the negated cooling monitor signal.

2.9.4.2 2401 Cooling Monitor Fault Delay s

Set a delay before the cooling monitor issues a fault. Only valid if fault is selected.

2.9.4.3 2402 Cooling Monitor Response

Select the response to a missing cooling monitor signal. The response is selected for both stopped and running states.

0 Warning while running

The converter issues a warning if the cooling signal is lost, and the converter is running.

1 Warning

The converter issues a warning if the cooling signal is lost.

2 Warning, Fault after Timeout while running

The converter issues a warning if the cooling signal is lost.

If the converter is running the event is escalated into a fault after the fault delay (No. 2401).

3 Warning and Fault after Timeout while running

The converter issues a warning if the cooling signal is lost, and the converter is running.

After the fault delay (No. 2401) the event is escalated into a fault.

7.9.5. Measured temperature protection

The measured temperature protection offers 10 individual protection channels for monitoring temperatures of external devices like filters or motor windings through temperature probes. Each protection can be configured to trigger an individual event, which can be used to identify the source of the high temperature measurement.

Each protection has two configurable stages, as illustrated in the figure below. Stage 1 is used to trigger a warning, while stage 2 can be used to trigger a more severe event (fault), which may possibly stop the converter. The user can configure the activation levels of both stages and the event response of stage 2. The levels of both stages can be configured to be the same, if two stages are unnecessary.

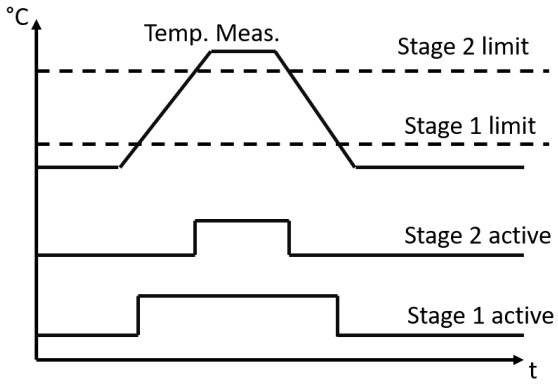

Operation principle of temperature measurement protection function.

Additionally, a temperature measurement range check feature is also available, as presented in the following figure. A range can be defined for checking the validity of each measured temperature protection. If the absolute measurement value of any protection exceeds this range, a separate event can be triggered.

7.9.5.1.Temp 1 Protection

2.9.5.1.1 5206 Temp. 1 Input

Select the temperature sensor input for the temperature protection.

2.9.5.1.2 5207 Temp. 1 Limit 1 °C

Set the temperature level for issuing a warning.

2.9.5.1.3 5208 Temp. 1 Limit 2 °C

Set the temperature level for issuing a protection response.

2.9.5.1.4 5209 Temp. 1 Limit 2 Response

Select the response for exceeding the limit.

0 No response

1 Info

The converter issues an info event.

3 Warning

The converter issues a warning event.

10 Fault

The converter issues a fault event and stops modulation.

11 Fault, Open MCB

The converter issues a fault event, stops modulation, and opens the main circuit breaker.

7.9.5.2.Temp 2 Protection

2.9.5.2.1	*5210*	*Temp. 2 Input*	
2.9.5.2.2	*5211*	*Temp. 2 Limit 1*	*°C*
2.9.5.2.3	*5212*	*Temp. 2 Limit 2*	*°C*
2.9.5.2.4	*5213*	*Temp. 2 Limit 2 Response*	

7.9.5.3.Temp 3 Protection

2.9.5.3.1	*5214*	*Temp. 3 Input*	
2.9.5.3.2	*5215*	*Temp. 3 Limit 1*	*°C*
2.9.5.3.3	*5216*	*Temp. 3 Limit 2*	*°C*
2.9.5.3.4	*5217*	*Temp. 3 Limit 2 Response*	

7.9.5.4. Temp 4 Protection

2.9.5.4.1	*5218*	*Temp. 4 Input*	
2.9.5.4.2	*5219*	*Temp. 4 Limit 1*	*°C*
2.9.5.4.3	*5220*	*Temp. 4 Limit 2*	*°C*
2.9.5.4.4	*5221*	*Temp. 4 Limit 2 Response*	

7.9.5.5.Temp 5 Protection

2.9.5.5.1	*5222*	*Temp. 5 Input*	
2.9.5.5.2	*5223*	*Temp. 5 Limit 1*	*°C*
2.9.5.5.3	*5224*	*Temp. 5 Limit 2*	*°C*
2.9.5.5.4	*5225*	*Temp. 5 Limit 2 Response*	

7.9.5.6.Temp 6 Protection

2.9.5.6.1	*5226*	*Temp. 6 Input*	
2.9.5.6.2	*5227*	*Temp. 6 Limit 1*	*°C*
2.9.5.6.3	*5228*	*Temp. 6 Limit 2*	*°C*
2.9.5.6.4	*5229*	*Temp. 6 Limit 2 Response*	

7.9.5.7.Temp 7 Protection

2.9.5.7.1	*5239*	*Temp. 7 Input*	
2.9.5.7.2	*5243*	*Temp. 7 Limit 1*	*°C*
2.9.5.7.3	*5269*	*Temp. 7 Limit 2*	*°C*
2.9.5.7.4	*5235*	*Temp. 7 Limit 2 Response*	

7.9.5.8.Temp 8 Protection

2.9.5.8.1	*5240*	*Temp. 8 Input*	
2.9.5.8.2	*5247*	*Temp. 8 Limit 1*	*°C*
2.9.5.8.3	*5270*	*Temp. 8 Limit 2*	*°C*
2.9.5.8.4	*5236*	*Temp. 8 Limit 2 Response*	

7.9.5.9.Temp 9 Protection

2.9.5.9.1	*5241*	*Temp. 9 Input*	
2.9.5.9.2	*5249*	*Temp. 9 Limit 1*	*°C*
2.9.5.9.3	*5271*	*Temp. 9 Limit 2*	*°C*
2.9.5.9.4	*5237*	*Temp. 9 Limit 2 Response*	

7.9.5.10. Temp 10 Protection

2.9.5.10.1	*5242*	*Temp. 10 Input*	
2.9.5.10.2	*5268*	*Temp. 10 Limit 1*	*°C*
2.9.5.10.3	*5272*	*Temp. 10 Limit 2*	*°C*
2.9.5.10.4	*5238*	*Temp. 10 Limit 2 Response*	

7.9.5.11. Common

2.9.5.11.1 5230 Meas. Valid Range *°C*

Set a valid reading range for the temperature probe measurements. The first element of the array is the higher and the second element the lower limit. An event is triggered if 1 of the readings goes above the higher, or below the lower limit.

2.9.5.11.2 5231 Meas. Out of Range Response

Select the converter response when 1 or more of the probes exceed the valid range.

0 No response

1 Info

The converter issues an info event.

3 Warning

The converter issues a warning event.

10 Fault

The converter issues a fault event and stops modulation.

11 Fault, Open MCB

The converter issues a fault event, stops modulation, and opens the main circuit breaker.

2.9.5.11.3 164 Enable option card external temperature measurement

7.9.6. Thermistor monitoring

The thermistor monitoring function provides three input channels that can be connected to a Positive Temperature Coefficient (PTC) type sensor. After a threshold of 4 kilo-ohms is exceeded in the input, an event is triggered. The event response is user configurable.

2.9.6.1 5232 Thermistor Monitoring Response

Select the response to all thermistor monitoring events.

0 No response -

1 Info

The converter issues an info event.

3 Warning

The converter issues a warning event.

10 Fault

The converter issues a fault event and stops modulation.

11 Fault, Open MCB

The converter issues a fault event, stops modulation, and opens the main circuit breaker.

2.9.6.2 1520 Thermistor Monitor 1 Input

Select a thermistor input for the thermistor monitor 1.

0 None (False)

No input is selected. A virtual value of FALSE is applied.

1 None (True)

No input is selected. A virtual value of TRUE is applied.

*** Available thermistor input terminals**

A dynamically generated selection of available thermistor input terminals is presented as an option. The specific set depends on the type and number of I/O options installed in the system.

2.9.6.3 1522 Thermistor Monitor 2 Input

Select a thermistor input for the thermistor monitor 2.

0 None (False)

No input is selected. A virtual value of FALSE is applied.

1 None (True)

No input is selected. A virtual value of TRUE is applied.

*** Available thermistor input terminals**

A dynamically generated selection of available thermistor input terminals is presented as an option. The specific set depends on the type and number of I/O options installed in the system.

2.9.6.4 1524 Thermistor Monitor 3 Input

Select a thermistor input for the thermistor monitor 3.

0 None (False)

No input is selected. A virtual value of FALSE is applied.

1 None (True)

No input is selected. A virtual value of TRUE is applied.

*** Available thermistor input terminals**

A dynamically generated selection of available thermistor input terminals is presented as an option. The specific set depends on the type and number of I/O options installed in the system.

7.9.7. Live Zero

2.9.7.1 4554 Live Zero Response

This parameter is used for selecting the converter generic behavior if at least one of the analog inputs has gone below the user settable threshold value.

Select the drive response to a missing input signal (live zero).

The following are the selections for the parameter.

0 No response

The event is ignored.

1 Info

The event is logged in the event log.

3 Warning

The converter issues a warning.

10 Fault

The converter issues a fault, and stops the modulation.

11 Fault, Open MCB

The converter issues a fault, stops the modulation, and opens the MCB, if controlled by the converter.

13 Warning, Current Lim. Ramp - Persistent

The converter issues a warning and ramps the pos./neg. active current limits to preset values. The current limit overrides stay active until the warning is acknowledged by a reset.

7.9.8. Fieldbus protection

This group contains parameters for setting responses, delays, and other settings for fieldbus related protections.

2.9.8.1 1304 Fieldbus Fault Response

Select the behavior when a fieldbus fault occurs.

The following are the selections for the parameter.

0 No response

The event is ignored.

1 Info

The event is logged in the event log.

3 Warning

The converter issues a warning.

10 Fault

The converter issues a fault and stops the modulation.

11 Fault, Open MCB

The converter issues a fault, stops the modulation, and opens the MCB, if controlled by the converter.

13 Warning, Current Lim. Ramp - Persistent

The converter issues a warning and ramps the pos./neg. active current limits to preset values. The current limit overrides stay active until the warning is acknowledged by a reset.

2.9.8.2 1305 No Fieldbus Connection Response

Select the response in case there is no fieldbus connection.

The following are the selections for the parameter.

0 No response

The event is ignored.

1 Info

The event is logged in the event log.

3 Warning

The converter issues a warning.

10 Fault

The converter issues a fault and stops the modulation.

11 Fault, Open MCB

The converter issues a fault, stops the modulation, and opens the MCB, if controlled by the converter.

13 Warning, Current Lim. Ramp - Persistent

The converter issues a warning and ramps the pos./neg. active current limits to preset values. The current limit overrides stay active until the warning is acknowledged by a reset.

2.9.8.3 1306 Process Data Timeout Response

Select the response to a process data timeout.

The following are the selections for the parameter.

0 No response

The event is ignored.

1 Info

The event is logged in the event log.

3 Warning

The converter issues a warning.

10 Fault

The converter issues a fault and stops the modulation.

11 Fault, Open MCB

The converter issues a fault, stops the modulation, and opens the MCB, if controlled by the converter.

13 Warning, Current Lim. Ramp - Persistent

The converter issues a warning and ramps the pos./neg. active current limits to preset values. The current limit overrides stay active until the warning is acknowledged by a reset.

2.9.8.4 1340 Process Data Timeout Delay s

Set a delay for the triggering of the Process Data Timeout event. If process data hasn't been updated within this delay time the event is triggered.

2.9.8.5 5244 Fieldbus Watchdog Response

Select the drive response for the fieldbus watchdog event.

The following are the selections for the parameter.

0 No response

The event is ignored.

1 Info

The event is logged in the event log.

3 Warning

The converter issues a warning.

10 Fault

The converter issues a fault and stops the modulation.

11 Fault, Open MCB

The converter issues a fault, stops the modulation and opens the MCB, if controlled by the converter.

13 Warning, Current Lim. Ramp - Persistent

The converter issues a warning and ramps the pos./neg. active current limits to preset values. The current limit overrides stay active until the warning is acknowledged by a reset.

2.9.8.6 5245 Fieldbus Watchdog Delay s

Set a delay for activating the fieldbus watchdog event.

2.9.8.7 5246 Fieldbus Watchdog Start Delay s

Set start-up delay time for activating the fieldbus watchdog event. Counter begins when converter wakes up.

7.9.9. HMI Connection Loss

2.9.9.1 5420 HMI Connection Loss

Select the response after lost connection to control panel or PC tool while they are in control. The timeout occurs after 5 s.

The following are the selections for the parameter.

0 No response

The event is ignored.

2 Info

The event is logged in the event log.

4 Warning - Persistent

The converter issues a warning that stays active until acknowledged by a reset.

10 Fault

The converter issues a fault and stops the modulation.

11 Fault, Open MCB

The converter issues a fault, stops the modulation and opens the MCB, if controlled by the converter.

7.9.10. Cooling Fan Supervision

2.9.10.1 2939 Main Fan Fail Response

Select the drive response to a main fan fail.

The following are the selections for the parameter.

0 No response

The event is ignored.

1 Info

The event is logged in the event log.

3 Warning

The converter issues a warning.

10 Fault

The converter issues a fault, and stops the modulation.

11 Fault, Open MCB

The converter issues a fault, stops the modulation and opens the MCB, if controlled by the converter.

2.9.10.2 2940 Internal Fan Fail Response

Select the drive response to an internal fan fail.

The following are the selections for the parameter.

0 No response

The event is ignored.

1 Info

The event is logged in the event log.

3 Warning

The converter issues a warning.

10 Fault

The converter issues a fault, and stops the modulation.

11 Fault, Open MCB

The converter issues a fault, stops the modulation and opens the MCB, if controlled by the converter.

7.9.11. Limit Supervision

Limit Supervision feature can be used to monitor current or power readouts.

If the supervised value becomes lower or higher than the *Limit Supervision 1 Threshold (No. 5253)*, it triggers the Limit Supervision fault, and the grid converter stops modulating if it is in run state. This protection also opens the main circuit breaker if controlled by the application and brings the DC-link voltage down to 0 V.

The fault remains active as long as the supervised value is lower than *Limit Supervision 1 Threshold* when monitoring a low limit or higher than *Limit Supervision 1 Threshold* when monitoring a high limit.

2.9.11.1 1990 Limit Supervision 1 Sel.

Select the supervision value.

The following are the selections for the parameter.

0 DC-link Current %

Shows the actual DC-link current in % of the DC-link nominal current.

1 DC-link Power %

Shows the actual DC-link power in % of the grid nominal power

2 Grid Active Current %

Shows the active current in % of grid nominal current.

3 Grid Active Power %

Shows the grid active power in % of grid nominal power.

2.9.11.2 5252 Limit Supervision 1 Type

Select the type for Limit Supervision 1.

The following are the selections for the parameter.

0 No Action

Feature is disabled.

1 Supervise Low Limit

Supervision will act if the monitored signal falls below the set threshold.

2 Supervise High Limit

Supervision will act if the monitored signal exceeds the set threshold.

2.9.11.3 5253 Limit Supervision 1 Threshold

Set the value of the limit (Low/High limit) for Limit Supervision 1.

2.9.11.4 4098 Limit Supervision 1 Enable

Enables limit supervision of the chosen parameter.

The following are the selections for the parameter.

0 Disabled

1 Enabled

2 Active when Current Lim. Ramp event response is active

3 Enabled in run state only

7.9.12. Grid Frequency Supervision

7.9.12.1. High Frequency Supervision

High frequency supervision monitors the grid frequency when the converter is running. If the grid frequency exceeds P 2.9.12.3 High Freq. Warning Limit for the duration of P 2.9.12.8 High Freq. Fault Delay, it triggers a warning. Once the warning limit has been reached, the triggering condition for the warning remains active as long as the frequency is higher than P 2.9.12.3 High Freq. Warning Limit minus P 2.9.12.7 Freq. Supervision Hysteresis.

If the grid frequency exceeds P 2.9.12.2 High Freq. Delayed Fault Limit for the duration of P 2.9.12.8 High Freq. Fault Delay, it triggers a fault, and the converter is stopped. Once the fault limit has been reached, the triggering condition for the fault remains active as long as the frequency is higher than P 2.9.12.2 High Freq. Delayed Fault Limit minus P 2.9.12.7 Freq. Supervision Hysteresis.

If the grid frequency exceeds P 2.9.12.1 High Freq. Instant Fault Limit, it triggers a fault instantaneously, and the converter is stopped.

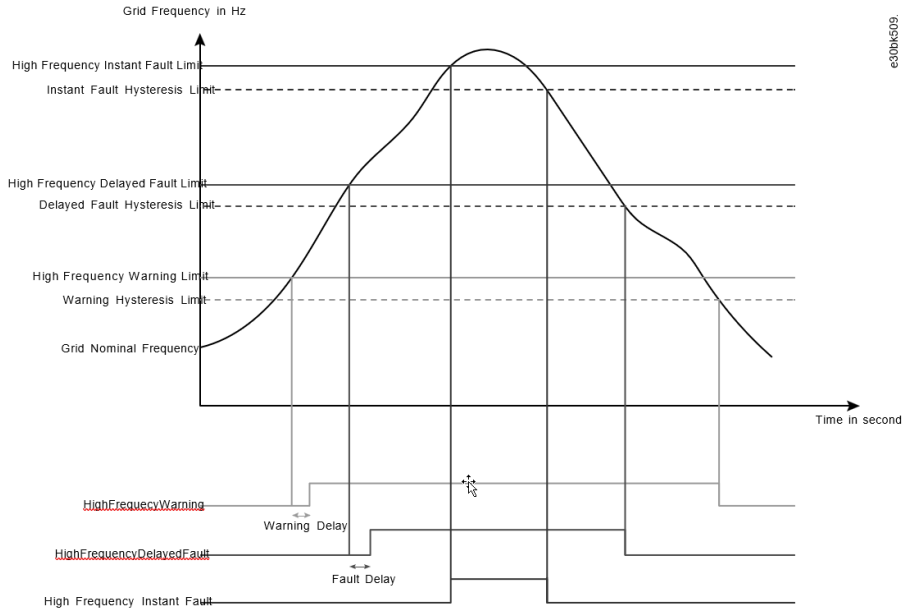

2.9.12.1 2840 High Freq. Instant Fault Limit Hz

Set high limit for grid frequency. The converter trips when the actual grid frequency exceeds the limit; active only in run state.

2.9.12.2 255 High Freq. Delayed Fault Limit Hz

Set high limit for grid frequency. The converter trips when actual grid frequency exceeds the limit longer than fault delay; active only in run state.

2.9.12.3 257 High Freq. Warning Limit Hz

Set high limit for grid frequency warning. The warning appears when actual grid frequency exceeds this level; active only in run state.

7.9.12.2. Low Frequency Supervision

Low frequency supervision monitors the grid frequency when the converter is running. If the grid frequency becomes lower than

P 2.9.12.4 Low Freq. Warning Limit for the duration of P 2.9.12.9 Low Freq. Fault Delay, it triggers a warning. Once the warning limit has been reached, the triggering condition for the warning remains active as long as the frequency is lower than P 2.9.12.4 Low Freq. Warning Limit plus P 2.9.12.7 Freq. Supervision Hysteresis.

If the grid frequency becomes lower than P 2.9.12.5 Low Freq. Delayed Fault Limit for the duration of P 2.9.12.9 Low Freq. Fault Delay, it triggers a fault, and the converter is stopped. Once the fault limit has been reached, the triggering condition for the fault remains active as long as the frequency is lower than P 2.9.12.5 Low Freq. Delayed Fault Limit plus P 2.9.12.7 Freq. Supervision Hysteresis.

If the grid frequency becomes lower than P 2.9.12.6 Low Freq. Instant Fault Limit, it triggers a fault instantaneously, and the converter is stopped.

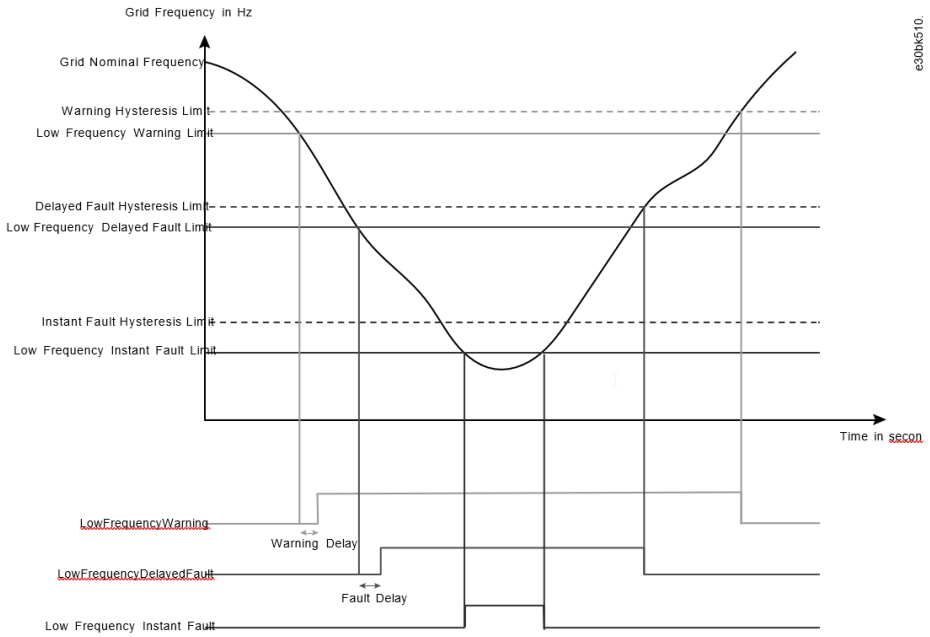

2.9.12.4 259 Low Freq. Warning Limit Hz

Low limit for grid frequency warning; warning appears if actual grid frequency is below this level; active only in run state.

2.9.12.5 258 Low Freq. Delayed Fault Limit Hz

Low limit for grid frequency; trips if actual grid frequency is below this level longer than fault delay; active only in run state.

2.9.12.6 2841 Low Freq. Instant Fault Limit Hz

Low limit for grid frequency; trips instantly if actual grid frequency is below this level; active only in run state.

2.9.12.7 256 Freq. Supervision Hysteresis Hz

Hysteresis for grid frequency fault & warning limits in Hz; fault/warning remains active unless the frequency is above/below by the limit +/- hysteresis value.

2.9.12.8 260 High Freq. Fault Delay s

Set the delay for triggering the Delayed Grid Frequency High fault.

2.9.12.9 261 Low Freq. Fault Delay

Set the delay for triggering the Delayed Grid Frequency Low fault.

7.9.13. Grid Voltage Supervision

7.9.13.1. Grid over voltage supervision

Overvoltage supervision monitors the grid voltage when the converter is running. If the grid voltage percentage exceeds P 2.9.13.3 Grid Overvoltage Warning Limit for the duration of P 2.9.13.8 Grid Overvoltage Fault Delay, it triggers a warning. Once the warning limit has been reached, the triggering condition for the warning remains active as long as the voltage is higher than P 2.9.13.3 Grid Overvoltage Warning Limit minus P 2.9.13.7 Grid Volt. Supervision Hysteresis.

If the grid voltage percentage exceeds P 2.9.13.2 Grid Overvoltage Delayed Fault Limit for the duration of P 2.9.13.8 Grid Overvoltage Fault Delay, it triggers a fault, and the converter is stopped. Once the fault limit has been reached, the triggering condition for the fault remains active as long as the voltage is higher than P 2.9.13.2 Grid Overvoltage Delayed Fault Limit minus P 2.9.13.7 Grid Volt. Supervision Hysteresis.

If the grid voltage percent exceeds P 2.9.13.1 Grid Overvoltage Instant Fault Limit, it triggers a fault instantaneously, and the converter is stopped.

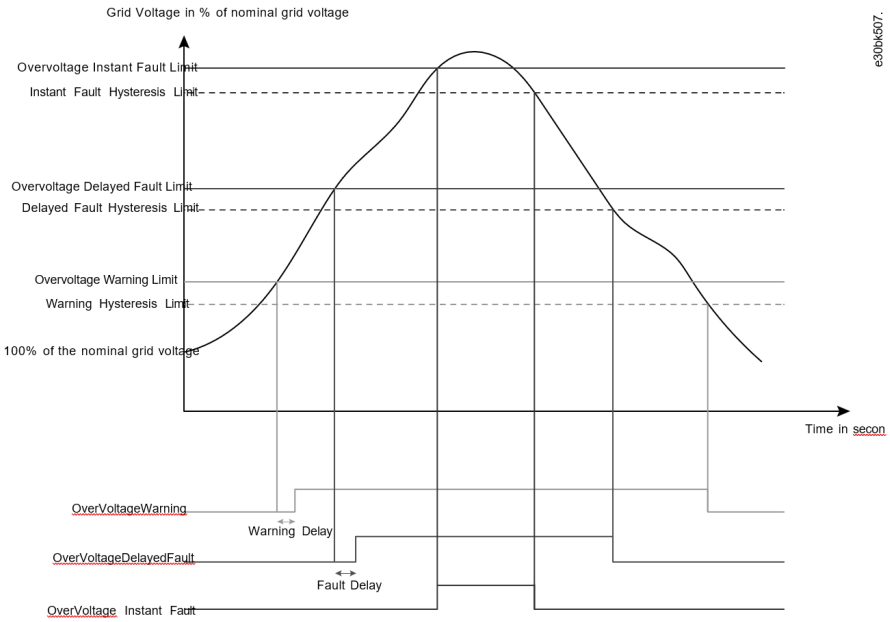

2.9.13.1 2842 Grid Overvoltage Instant Fault Limit %

Overvoltage limit for grid voltage in % of nominal grid voltage; trips instantly if actual grid voltage exceeds this level; active only in run state.

2.9.13.2 250 Grid Overvoltage Delayed Fault Limit %

Overvoltage limit for grid voltage in % of nominal grid voltage; trips if actual grid voltage exceeds this level longer than fault delay; active only in run state.

2.9.13.3 252 Grid Overvoltage Warning Limit %

Overvoltage limit for grid voltage warning in % of nominal grid voltage; warning appears if actual grid voltage exceeds this level; active only in run state.

7.9.13.2. Undervoltage Supervision

Undervoltage supervision monitors the grid voltage when the converter is running. If the grid voltage percentage becomes lower than P 2.9.13.4 Grid Undervoltage Warning Limit for the duration of P 2.9.13.12 Grid Undervoltage Fault Delay, it triggers a warning. Once the warning limit has been reached, the triggering condition for the warning remains active as long as the voltage is lower than P 2.9.13.4 Grid Undervoltage Warning Limit plus P 2.9.13.7 Grid Volt. Supervision Hysteresis.

If the grid voltage percentage becomes lower than P 2.9.13.5 Grid Undervoltage Delayed Fault Limit for the duration of P 2.9.13.9 Grid Undervoltage Fault Delay, it triggers a fault, and the converter is stopped. Once the fault limit has been reached, the triggering condition for the fault remains active as long as the voltage is lower than P 2.9.13.5 Grid Undervoltage Delayed Fault Limit plus P 2.9.13.7 Grid Volt. Supervision Hysteresis.

If the grid voltage percentage becomes lower than P 2.9.13.6 Grid Undervoltage Instant Fault Limit, it triggers a fault instantaneously, and the converter is stopped.

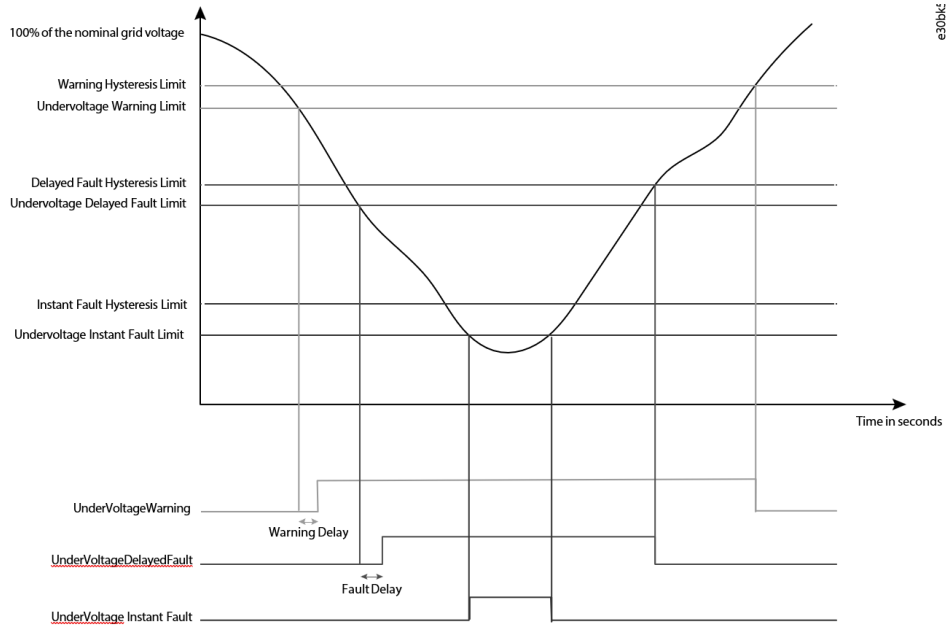

2.9.13.4 253 Grid Undervoltage Warning Limit %

Undervoltage limit for grid voltage warning in % of nominal grid voltage; warning appears if actual grid voltage is below this level; active only in run state.

2.9.13.5 262 Grid Undervoltage Delayed Fault Limit %

Undervoltage limit for grid voltage in % of nominal grid voltage; trips if actual grid voltage is below this level longer than fault delay; active only in run state.

2.9.13.6 2843 Grid Undervoltage Instant Fault Limit %

Undervoltage limit for grid voltage in % of nominal grid voltage; trips instantly if actual grid voltage is below this level; active only in run state.

2.9.13.7 251 Grid Volt. Supervision Hysteresis %

Hysteresis for grid voltage fault & warning limits in % of nominal grid voltage; fault/warning remains active unless the voltage percentage is above/below by the limit+-hysteresis value.

2.9.13.8 254 Grid Overvoltage Fault Delay

Set the delay for triggering the Delayed Grid Voltage High fault.

2.9.13.9 263 Grid Undervoltage Fault Delay

Set the delay for triggering the Delayed Grid Voltage Low fault.

7.9.14. Missing Grid Phase

2.9.14.1 266 Phase Fault Limit Run %

Imbalance needed in run state for missing phase condition to be true.

2.9.14.2 264 Phase Fault Limit Stop %

Imbalance needed in stop state for missing phase condition to be true.

2.9.14.3 265 Phase Fault Delay s

Time required for missing phase condition is true until trip is generated.

7.9.15. Pre-Charge Monitoring

2.9.15.1 6564 Max. Pre-Charge Time s

Set maximum allowed pre-charging time in seconds.

2.9.15.2 6565 Min. Pre-Charge Time s

Set minimum allowed pre-charging time in seconds.

2.9.15.3 6568 Ext. Pre-Charge Monitor Response

Set the response of external pre-charging monitoring exception.

The following are the selections for the parameter.

0 No response

1 Info

The converter issues an info event.

3 Warning

The converter issues a warning event.

10 Fault

The converter issues a fault event and stops modulation.

11 Fault, Open MCB

The converter issues a fault event, stops modulation, and opens the main circuit breaker.

7.9.16. Surge Protection

2.9.16.1 127 AC Surge Prot. Device Input

2.9.16.2 128 DC Surge Prot. Device Input

7.10. External Grid Synchronization (Menu Index 2.10)

Grid synchronization allows Grid Converter to operate as a microgrid converter or as a grid-connected converter, and change between these two operating modes on-the-fly based on the grid connection state.

A typical configuration with the external grid synchronization functionality is illustrated in the following figure. When the external grid contactor is open, the converter operates in island or droop mode, and when an external grid is connected, the operating mode is changed to DC-link Voltage (AFE) or Grid Converter can continue operation in the grid forming or supporting modes.

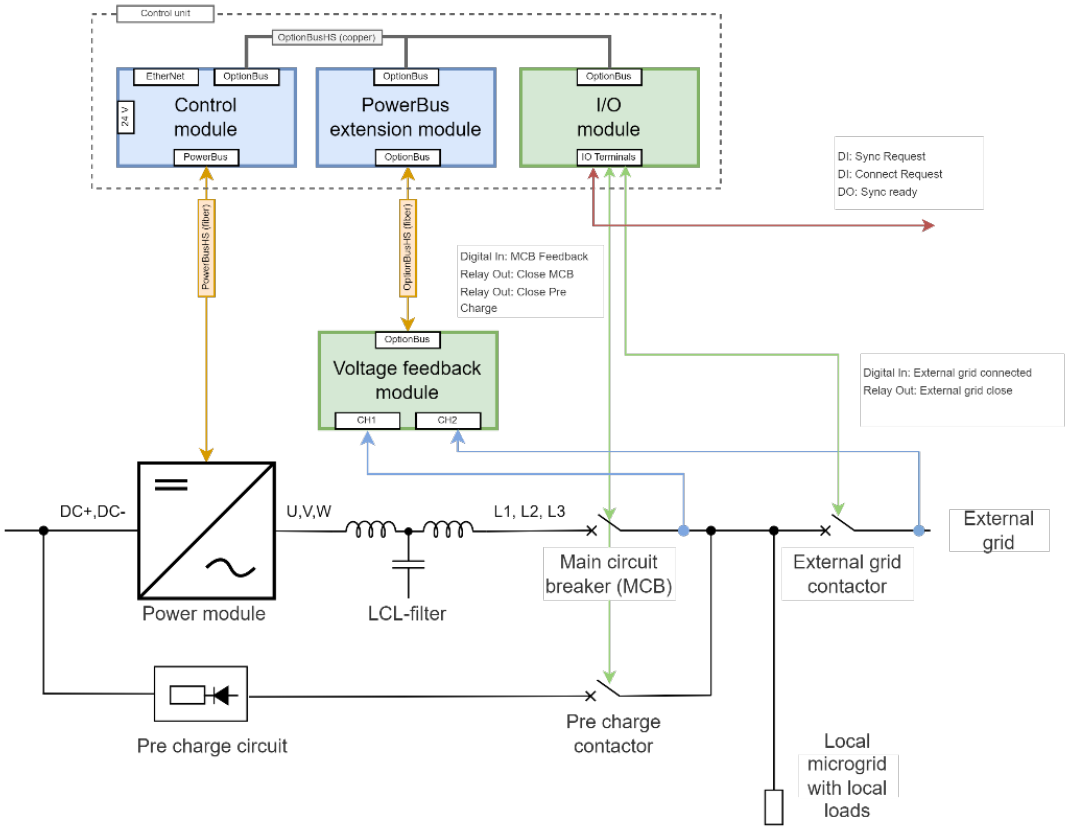

Figure 31: External grid synchronization

The external grid synchronization request can be initiated by the digital input Ext. Grid Synchronize Input (6595). Based on the request, the grid converter tries to synchronize its output voltage, frequency, and phase angle to the respective measurement channel.

The measurement channel is selected using Ext. Grid Voltage Feedback Source (6605). It has the following 3 selections:

0: Off

1: X52 (CH1)

2:X53 (CH2)

Grid Converter can only successfully synchronize to a grid when the following conditions are met:

- Grid Undervoltage Instant Fault Limit (No. 2843) < X52 or X53 Voltage (parameter No. 4086 or No. 4089 based on the selection from Grid Voltage Feedback Source No. 6539) < Grid Overvoltage Instant Fault Limit (No. 2842)

- Low Freq. Instant Fault Limit (No. 2840) < X52 or X53 Frequency (parameter No. 4087 or No. 4090 based on the selection from Grid Voltage Feedback Source No. 6539) < High Freq. Instant Fault Limit (No. 2840)

In the previous illustration, X53 of the OC7V0 is connected to the external grid. Therefore, X53 is selected for Ext. Grid Voltage Feedback Source (No. 6605). Once the synchronization is ready, the Ext. Grid Status Word (No. 6594) shows all the bits high. A digital output can also be configured to indicate the external grid synchronization ready status using Ext. Grid Synchronized Output (No. 6599).

The feature also includes an interlock Ext. Grid Connect Enable Input (No. 6598) to allow a connection to the external grid. This interlock must be activated to enable the connection. The default value of the interlock is set to TRUE, but it can also be configured as a digital input.

After the synchronization is ready and the interlock to connect has been activated, closing the external grid breaker can be requested using the digital input Ext. Grid Connect Input (6596). All the digital inputs can be activated together to start the synchronization and connect to the external grid as soon as all the conditions are met.

The digital output to close the external grid breaker can be configured using Ext. Grid Connect Output (No. 6600). The external grid breaker feedback can also be configured using the digital input Ext. Grid Connect Feedback Input (No. 6597). If the feedback input is not used, then the feedback is simulated by the grid converter based on the digital output to close the external grid breaker. The feedback delay can also be configured using Ext. Grid Connected Feedback Delay (No. 6604). When the grid converter receives the feedback, the internal synchronization request is removed since the grid converter goes to the grid-connected configuration. Based on the feedback, the converter response can be configured using Ext. Grid Connected Response (No. 6602). The response can be configured to be one of the following:

0: No Operation Mode Change

Setting the Ext.Grid Connected Response (No. 6602) to No Operation Mode Change keeps the converter's operating mode the same as selected with parameter Operation Mode (No. 161) after the grid converter is connected to the external grid.

1: Change to Ext. Grid Control Mode (Default)

The default setting for the Ext. Grid Connected Response (No. 6602) parameter is "Change to Ext. Grid Control Mode." This response allows the converter to automatically switch its operating mode once it is connected to the external grid. Any operating mode can be selected through the Ext. Grid Control Mode (No. 6603) parameter. For example, the converter could autonomously switch from droop mode to DC-link Voltage (AFE) mode after the external grid is connected. The default setting for Ext. Grid Control Mode (No. 6603) is "DC-link Voltage (AFE) mode".

2: Stop Converter after External Grid is Connected

When the "Stop Converter after External Grid is Connected" response is set for Ext. Grid Connected Response (No. 6602) parameter, the converter stops the modulation 100 milliseconds after the external grid is successfully connected. It is possible to start the converter again by issuing a new run command. A use case for this response can be a vessel that would shift its load to the onshore grid after docking.

The following flowchart explains the sequence of the functionality:

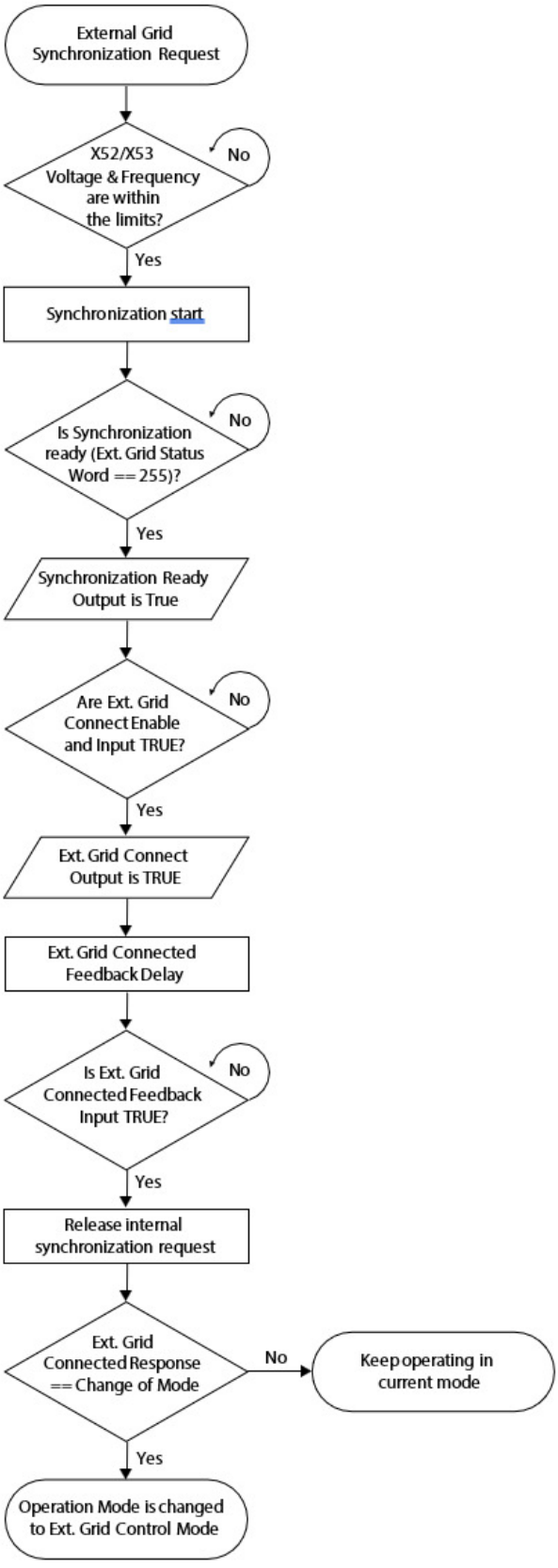

Figure 32: Grid Synchronization Flowchart

2.10.1 6595 Ext. Grid Synchronize Input

Set the digital input for external grid synchronization start request.

2.10.2 6598 Ext. Grid Connect Enable Input

Select a digital input for enabling the converter connection to the external grid after the synchronization is ready.

2.10.3 6596 Ext. Grid Connect Input

Select a digital input for the external grid connection.

2.10.4 6597 Ext. Grid Connected Feedback Input

Set the digital input for external grid connection feedback.

2.10.5 6599 Ext. Grid Synchronized Output

Set the digital output for the external grid synchronization ready.

2.10.6 6600 Ext. Grid Connect Output

Select a digital output for external grid connection.

2.10.7 6604 Ext. Grid Connected Feedback Delay

Set the delay from the feedback of external grid connection.

2.10.8 6602 Ext. Grid Connected Response

Set the response of the converter when the external grid is connected.

The following are the selections for the parameter.

0 No Operation Mode Change

1 Change to Ext. Grid Control Mode

2.10.9 6603 Ext. Grid Control Mode

Set the operation mode which the converter uses if mode change is set as a response to external grid connection. All the operation modes can be selected.

2.10.10 6605 Ext. Grid Voltage Feedback Source

Set the external grid voltage measurement configuration. The external grid synchronization will use this configuration to start the synchronization of the converter.

The following are the selections for the parameter.

0 Off

1 X52

2 X53

7.11. Grid Code parameters

Grid code parameters do not consider ID2947 Current/Power Positive Direction, instead grid code parameters are always given as positive direction as “From DC-link to Grid”.

7.11.1. General Settings

2.11.1.1 5593 Grid Code Activation

Enable or disable all grid code functions. This parameter bypasses all individual enable selection P2.11.1.4 – P2.11.1.21. It is convenient when needed to disable all grid code functions during commissioning or maintenance.

Different grid code functions may have own logic to be enable or disabled when needed.

0 = Disabled (Default)

All grid code functions are disabled; converter uses tripping function from G2.9.12 for frequency and G2.9.13 for voltage

All Grid Code functions are disabled regardless of enable selection in P2.11.1.4 – P2.11.1.21

1 = Enabled

Select Enabled when Grid Codes are needed.

Tripping functions from G2.9.12 for frequency and G2.9.13 for voltage are disabled except P2.9.13.1 No. 2842 Grid Overvoltage Instant Fault Limit,

Set P2.9.13.1 No. 2842 Grid Overvoltage Instant Fault Limit higher than the grid code disconnection limits. Lower values may not be grid code complient.

Grid Code functions are active, see also individual enable parameters P2.11.1.4 – P2.11.1.21 for specific grid code functions.

Drive will stop modulating and opens the MCB in case of Grid Code trip.

Grid code trips are warnings only to enable reconnection without external reset command.

2.11.1.2 5785 Grid Code Settings Selection

Selects how Grid Code settings are configured for the drive.

0 = Not Selected (Default)

No Grid Code settings are selected. The drive will not run and a warning will be triggered.

1 = Manual Settings

Configure all Grid Code parameters manually. This mode provides full control over individual parameter settings and is used when custom settings are required that differ from standard regional configurations.

2 = Regional Settings

Use predefined regional Grid Code parameter sets. When this mode is selected, choose the appropriate region using the Grid Code Region Selection (5786) parameter. All Grid Code parameters are automatically configured according to the selected region's requirements.

2.11.1.3 5786 Grid Code Region Selection

Selects which regional Grid Code parameter set to apply. This parameter is only active when Grid Code Settings Selection (P_GridCodeSettingsSel) is set to 2 (Regional Settings).

0 = No Region Selected (Default)

No regional settings are loaded. The drive will not run and a warning will be triggered.

1 = Australia A

Applies Grid Code parameters compliant with AS/NZS 4777 standard for Australian Region A.

2 = Australia B

Applies Grid Code parameters compliant with AS/NZS 4777 standard for Australian Region B.

3 = Australia C

Applies Grid Code parameters compliant with AS/NZS 4777 standard for Australian Region C.

4 = New Zealand

Applies Grid Code parameters compliant with AS/NZS 4777 standard for New Zealand.

Note: When a region is selected, all Grid Code parameters (frequency/voltage trips, reconnection settings, reactive power control, frequency response, and anti-islanding functions) are automatically configured with the appropriate values for that region. Values can be changed but are retuned back to regional setting when control is re-started.

2.11.1.4 5699 Frequency Trips

Enable/Disable grid code frequency limit trip functions.

Note. 2.11.1.1 (5593) Grid Code Activation must also be enabled.

2.11.1.5 5700 Voltage Trips

Enable/Disable grid code voltage limit trip functions.

Note. 2.11.1.1 (5593) Grid Code Activation must also be enabled.

2.11.1.6 5791 Mean Voltage Trip

Enable/Disable 10 minute mean voltage trip function.

Note. 2.11.1.1 (5593) Grid Code Activation must also be enabled.

2.11.1.7 5727 Anti-Islanding Function

Enable/Disable Anti-Islanding tripping functions.

Note. 2.11.1.1 (5593) Grid Code Activation must also be enabled.

2.11.1.8 5701 Rate of Change of Frequency

Enable/Disable Rate of Change of Frequency.

Note. 2.11.1.1 (5593) Grid Code Activation must also be enabled.

2.11.1.9 5664 Q(U) Reactive power function

Enable/Disable Q(U) Reactive power function.

Note. 2.11.1.1 (5593) Grid Code Activation must also be enabled.

2.11.1.10 5666 Power Factor

Enable/Disable Power Factor.

Note. 2.11.1.1 (5593) Grid Code Activation must also be enabled.

2.11.1.11 5665 Q(P) Reactive power curve

Enable/Disable Q(P) Reactive power curve.

Note. 2.11.1.1 (5593) Grid Code Activation must also be enabled.

2.11.1.12 5721 Q(U) Reactive Power Curve

Enable/Disable Q(u) Reactive power curve.

Note. 2.11.1.1 (5593) Grid Code Activation must also be enabled.

2.11.1.13 5667 Dynamic Support

Enable/Disable Dynamic Support.

Note. 2.11.1.1 (5593) Grid Code Activation must also be enabled.

2.11.1.14 5668 Frequency Sensitive Mode

Enable/Disable Frequency Sensitive Mode.

Note. 2.11.1.1 (5593) Grid Code Activation must also be enabled.

2.11.1.15 5669 High Frequency Power Reference

Enable/Disable High Frequency Power Reference.

Note. 2.11.1.1 (5593) Grid Code Activation must also be enabled.

2.11.1.16 5670 Low Frequency Power Reference

Enable/Disable Low Frequency Power Reference.

Note. 2.11.1.1 (5593) Grid Code Activation must also be enabled.

2.11.1.17 5765 Low Frequency Power Reference 2

Enable/Disable Low Frequency Power Reference 2.

Note. 2.11.1.1 (5593) Grid Code Activation must also be enabled.

2.11.1.18 5773 High Frequency Power Reference 2

Enable/Disable High Frequency Power Reference 2.

Note. 2.11.1.1 (5593) Grid Code Activation must also be enabled.

2.11.1.19 5682 High Voltage Power Limit

Enable/Disable High Voltage Power Limit.

Note. 2.11.1.1 (5593) Grid Code Activation must also be enabled.

2.11.1.20 5746 High Voltage Power Limit 2

Enable/Disable High Voltage Power Limit 1.

Note. 2.11.1.1 (5593) Grid Code Activation must also be enabled.

2.11.1.21 5760 Low Voltage Power Limit 2

Enable/Disable Low Voltage Power Limit 2.

Note. 2.11.1.1 (5593) Grid Code Activation must also be enabled.

7.11.2. Disconnection

7.11.2.1. Frequency Trips

Define line frequency trip levels and times to tripping with these parameters. Times define tripping delay after frequency has exceed a set limit. A monitored signal may have a hardware and/or software filtering function that must be considered when estimating the total tripping time.

Reference frequency is P2.1.1 N6536 Grid Nominal Frequency (100 %).

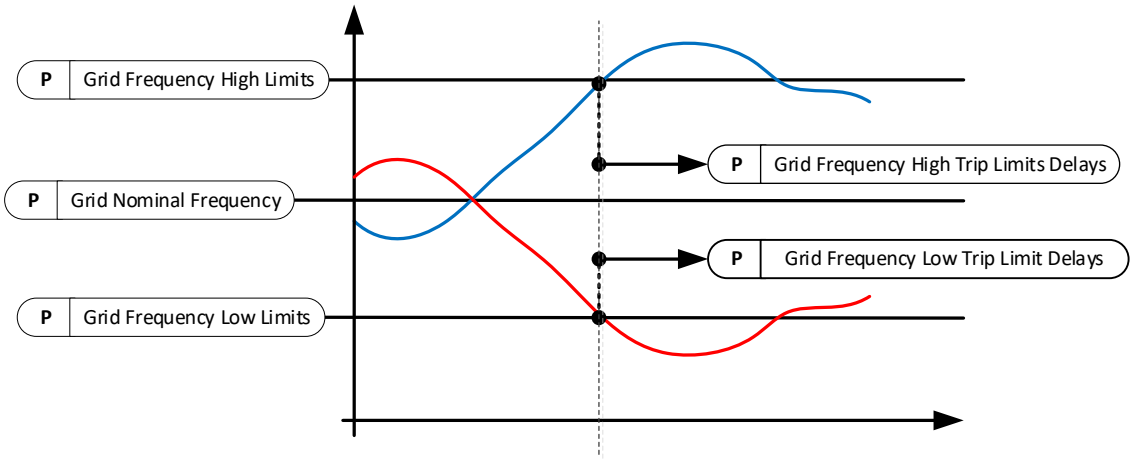

2.11.2.1.1 5569 Grid Frequency High Trip 1 Limit

2.11.2.1.2 5570 Grid Frequency High Trip 1 Delay

2.11.2.1.3 5571 Grid Frequency High Trip 2 Limit

2.11.2.1.4 5560 Grid Frequency High Trip 2 Delay

2.11.2.1.5 5561 Grid Frequency High Trip 3 Limit

2.11.2.1.6 5562 Grid Frequency High Trip 3 Delay

Protection functions for high grid frequency.

2.11.2.1.7 5563 Grid Frequency Low Trip 1 Limit

2.11.2.1.8 5564 Grid Frequency Low Trip 1 Delay

2.11.2.1.9 5565 Grid Frequency Low Trip 2 Limit

2.11.2.1.10 5566 Grid Frequency Low Trip 2 Delay

2.11.2.1.11 5567 Grid Frequency Low Trip 3 Limit

2.11.2.1.12 5568 Grid Frequency Low Trip 3 Delay

Protection functions for low grid frequency.

7.11.2.1.1. Narrow frequency trips limits

Separately activated frequency trips limit.

2.11.2.1.13 5693 Narrow Frequency Band Enable DigIn

Select digital input to active narrow frequency band.

2.11.2.1.14 5696 Narrow Frequency Low Trip Limit

2.11.2.1.15 5697 Narrow Frequency High Trip Limit

2.11.2.1.16 5698 Narrow Frequency Trip Limit Delay

These limits operate in parallel with other frequency limits once activated.

7.11.2.2. Voltage Trips

Define grid voltage trip levels and times to tripping with these parameters. Times defines the tripping delay after the drive sees that voltage has exceed a set limit. A monitored signal may have a hardware and/or software filtering function that must be considered when estimating the total tripping time. Each tripping limit is independent of each other. The reference voltage is P2.1.2 (6537) Grid Nominal Voltage (100 %).

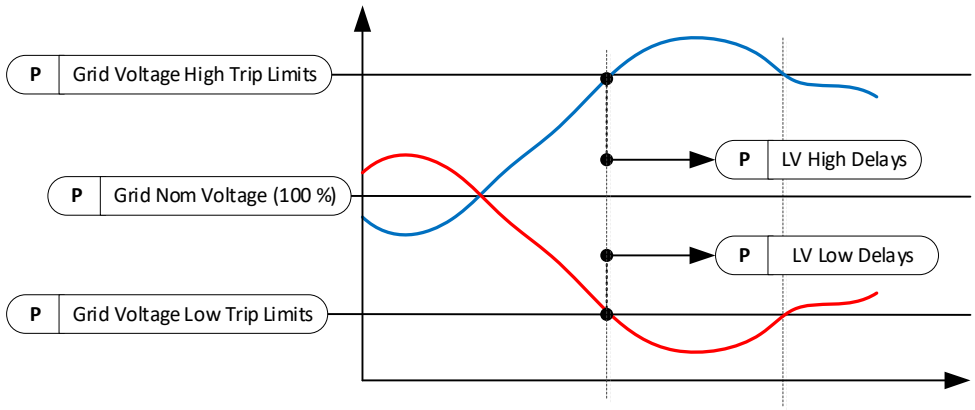

2.11.2.2.1 5573 Grid Voltage High Trip 1 Limit

2.11.2.2.2 5574 Grid Voltage High Trip 1 Delay

2.11.2.2.3 5575 Grid Voltage High Trip 2 Limit

2.11.2.2.4 5576 Grid Voltage High Trip 2 Delay

2.11.2.2.5 5577 Grid Voltage High Trip 3 Limit

2.11.2.2.6 5578 Grid Voltage High Trip 3 Delay

Protection functions for high grid voltage. These limits are monitoring each main voltage maximum voltage.

2.11.2.2.7 5579 Grid Voltage Low Trip 1 Limit

2.11.2.2.8 5580 Grid Voltage Low Trip 1 Delay

2.11.2.2.9 5581 Grid Voltage Low Trip 2 Limit

2.11.2.2.10 5582 Grid Voltage Low Trip 2 Delay

2.11.2.2.11 5583 Grid Voltage Low Trip 3 Limit

2.11.2.2.12 5584 Grid Voltage Low Trip 3 Delay

2.11.2.2.13 5585 Grid Voltage Low Trip 4 Limit

2.11.2.2.14 5586 Grid Voltage Low Trip 4 Delay

Protection function for low grid voltage. These limits are monitoring the minimum voltage for each main voltage.

2.11.2.2.15 5686 Grid Voltage High Mean Trip Limit

Protection function for 10-minute mean voltage protection.

2.11.2.2.16 5709 Grid Voltage Positive Sequence Low Trip Limit

2.11.2.2.17 5710 Grid Voltage Positive Sequence Low Trip Delay

Tripping function for positive sequence voltage.

2.11.2.2.18 5711 Grid Voltage Negative Sequence Trip Limit

2.11.2.2.19 5712 Grid Voltage Negative Sequence Trip Delay

Tripping function for negative sequence voltage.

7.11.2.3. Anti-Islanding

The purpose of the Anti-Islanding function is to disconnect the drive from the remaining grid in case connection to the main utility grid is lost. This removes voltage to the island side of the grid, for example, if that part of the grid is disconnected from the public grid for maintenance purposes.

The active Anti-Islanding function feeds a small reactive current to the grid during frequency changes. This is not noticeable during normal operation, but when there is an islanding situation, the frequency and voltage do not stay stable, even in a balanced islanding grid.

Set the tripping limits for the Anti-islanding function that are separate from the normal frequency and voltage tripping limits. It is recommended to select values outside the normal tripping limits.

2.11.2.3.1 5623 Anti-Islanding Mode

Enables or disables anti-islanding function.

0 = Passive

In frequency deviation, reactive current is not fed to the grid to help unbalance frequency stability.

1 = Active

In islanding situations, a small reactive current is fed to the grid to help unbalance frequency stability during frequency changes, to make sure accidental power balancing is not possible.

2.11.2.3.2 5624 Anti-Islanding Kp

Gain for disbalancing the operation as function of frequency error to nominal frequency.

2.11.2.3.3 5733 Anti-Islanding RoCoF Trip Limit

The rate of change of the frequency trip limit parameter. Set the maximum change rate to trip the grid code warning. Used mainly together with Anti-Islanding function.

2.11.2.3.4 5796 Anti-Islanding RoCoF Trip Delay

Delay time before RoCoF trip activates.

2.11.2.3.5 5728 Anti-Islanding Voltage High Trip Limit

2.11.2.3.6 5729 Anti-Islanding Voltage Low Trip Limit

Voltage trip limits that are dedicated for anti-islanding. Note: it is recommended to keep the low voltage level zero if there are FRT requirements.

2.11.2.3.7 5730 Anti-Islanding Frequency High Trip Limit

2.11.2.3.8 5731 Anti-Islanding Frequency Low Trip Limit

Frequency trip limits that are dedicated for anti-islanding.

2.11.2.3.9 5732 Anti-Islanding U & F Trip Delay

Delay for anti-islanding voltage and frequency monitoring.

7.11.2.4. Rate of Chang of Frequency

2.11.2.4.1 5663 RoCoF Trip Limit

The rate of change of the frequency trip limit parameter. Set the maximum change rate to trip the grid code warning.

2.11.2.4.2 5793 RoCoF Trip Limit 1 Delay

Delay time before RoCoF trip activates.

2.11.2.4.3 5794 RoCoF Trip Limit 2

Rate of Change of Frequency (RoCoF) threshold for Trip Limit 2

2.11.2.4.4 5795 RoCoF Trip Limit 2 Delay

Delay time before RoCoF Trip Lim 2 activates.

7.11.2.5. External Trips

2.11.2.5.1 5694 External Grid Code Trip DigIn 1

Digital input to give a grid code trip for the converter. Its operation is identical to any grid code trip in the drive itself.

2.11.2.5.2 5695 External Grid Code Trip DigIn 2

Digital input to give a grid code trip for the converter. Its operation is identical to any grid code trip in the drive itself.

7.11.3. Connection and Reconnection

7.11.3.1. Connection

These parameters define connection requirements and conditions when start command is issued to the drive. Limits and delays can be set separately from the reconnection function.

2.11.3.1.1 5708 Connection Time

First start wait time for grid to be inside connection limits.

2.11.3.1.2 5715 Connection Ramp Rate

First start ramp rate to power reference.

2.11.3.1.3 5704 Connection Line Frequency High Limit

First start connection line frequency high limit.

2.11.3.1.4 5705 Connection Line Frequency Low Limit

First start connection line frequency low limit.

2.11.3.1.5 5706 Connection Line Voltage High Limit

First start connection line voltage high limit.

2.11.3.1.6 5707 Connection Line Voltage Low Limit

First start connection line voltage low limit.

7.11.4. Reconnection

These parameters define reconnection behavior after there has been a Grid Code trip. Reconnection time starts to count down when grid frequency and grid voltage have returned to nominal range. If OK limits are not defined in this parameter group, the tripping limits are used as OK limits.

2.11.3.2.1 5588 Reconnection time

Reconnection time when a grid code trip has happened.

A start command is given if Stop State reconnection time has not passed.

2.11.3.2.2 5635 Reconnection Power Increase Rate Limit

Power ramp up rate on reconnection.

2.11.3.2.3 5589 Line Frequency High OK Limit

Reconnection high frequency OK limit.

2.11.3.2.4 5590 Line Frequency Low OK Limit

Reconnection low frequency OK limit.

2.11.3.2.5 5591 Line Voltage High OK Limit

Reconnection high voltage OK limit.

2.11.3.2.6 5592 Line Voltage Low OK Limit

Reconnection low voltage OK limit.

7.11.5. Reactive Power Functions

7.11.5.1. General Settings

2.11.4.1.1 5703 Reactive Limiting At Mindex Limit

When activated, the drive limits positive reactive current/power in case DC-link voltage is not sufficient to keep the requested reactive power.

2.11.4.1.2 5726 Constant Reactive Power Ref.

Constant reactive power reference when grid codes are active.

2.11.4.1.3 5743 Reactive Ref. Q Lock-in Voltage

Voltage level when the constant reactive power reference is activated. Setting lock-in and lock-out values to zero disables the lock-in lock-out function.

2.11.4.1.4 5744 Reactive Ref. Q Lock-out Voltage

Voltage level when the constant reactive power reference is disabled. Setting lock-in and lock-out values to zero disables the lock-in lock-out function.

2.11.4.1.5 5790 Reactive Power Priority

Set Reactive Power Priority configuration. This parameter allows the use of different current priority depending on whether grid codes are active or not.

0: Common Par. No.2853

Current priority is the same as in normal grid converter operation. Selected with parameter No. 2853. The default for No. 2853 is reactive current priority.

1: Active Power Priority

Active current has priority.

2: Reactive Power Priority

Reactive current has priority. Commonly grid codes are operated at reactive current/power priority modes.

7.11.5.2. Q(U) Reactive Power Function

Reactive power control based on grid voltage. Positive reactive power increases grid voltage and negative reactive power decreases grid voltage.

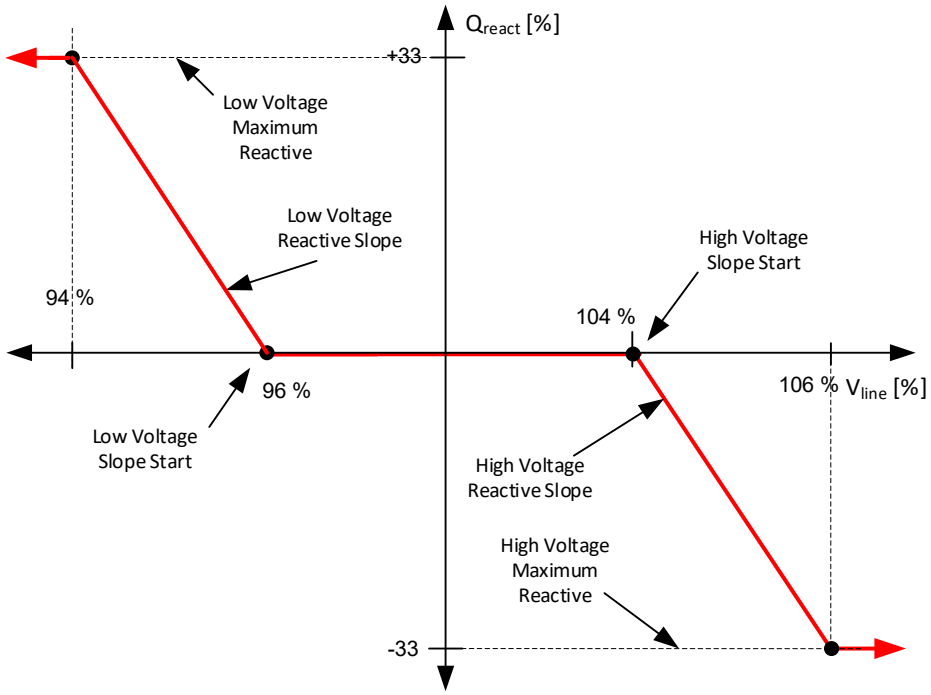

2.11.4.2.1 5610 High Voltage Slope Start %

Voltage level where reactive power is started to be fed to the grid with the slope defined by high voltage reactive slope (5608) when voltage continues to increase.

2.11.4.2.2 5609 High Voltage Maximum Reactive %

Maximum absolute reactive power that is allowed to be generated by the Q(U) high voltage function. Limit can be given as a positive value for normal operation.

2.11.4.2.3 5608 High Voltage Reactive Slope %/%

Increase rate of reactive power in percent of one percent increase in voltage. Positive value increases negative direction reactive power as normally in overvoltage situations. But can be reversed by giving negative slope. Positive slope value decreases grid voltage.

2.11.4.2.4 5611 Low Voltage Slope Start %

Voltage level where reactive power is started to be fed to the grid with the slope defined by low voltage reactive slope (5613) when the voltage continues to decrease.

2.11.4.2.5 5612 Low Voltage Maximum Reactive %

Maximum negative reactive power that is allowed to be generated by the low voltage reactive slope function (5613). Limit can be given as positive value for normal operation.

2.11.4.2.6 5613 Low Voltage Reactive Slope %/%

Increase rate of reactive power in percent of one percent decrease in voltage. Positive value increases positive direction reactive power as normally in undervoltage situations. But can be reversed by giving negative slope. Positive slope value increases grid voltage.

2.11.4.2.7 5616 Zero Reactive Voltage Offset

Defines offset where reactive voltage level will be zero. This is usually given by TSO during normal operation while keeping the slope and slope starting point parameters fixed.

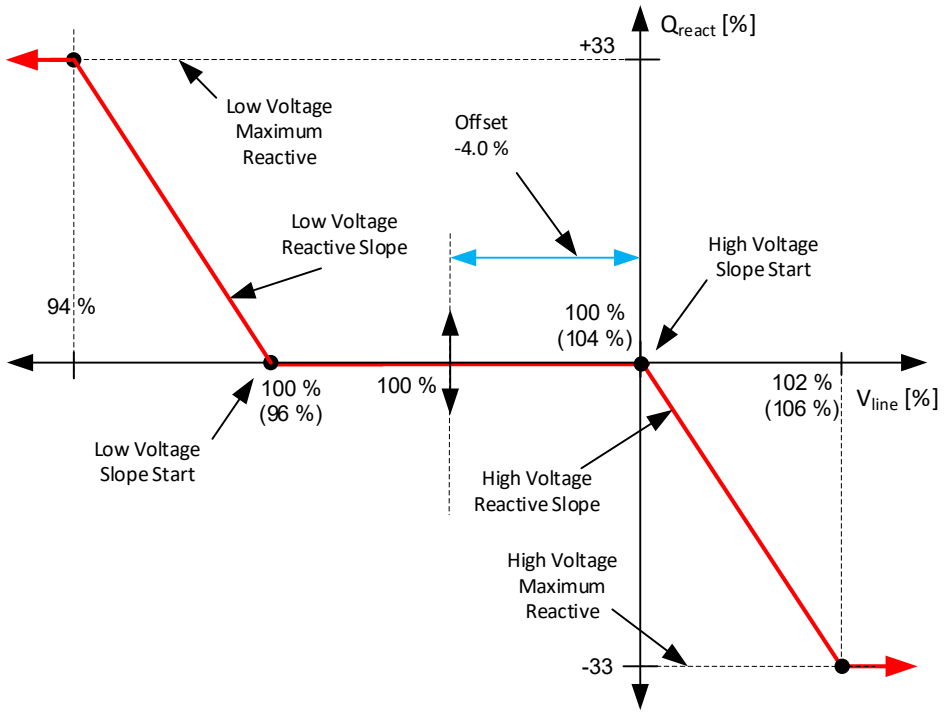

2.11.4.2.8 5629 *Voltage Dead Band for Reactive Power*

Defines the dead-band area that the voltage change needs to exceed before reactive reference is changed. Once the voltage has changed, a stable time of one second is needed before dead-band is activated again.

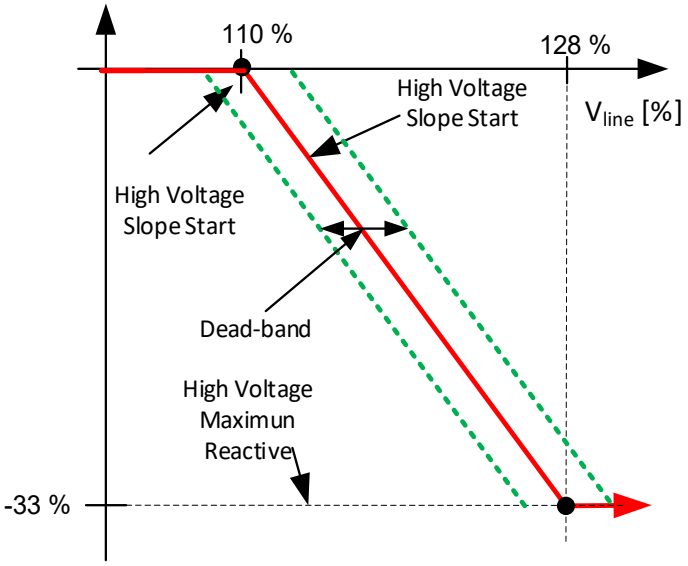

2.11.4.2.9 5628 *Reactive Power Displacement*

Reactive power displacement (Q) defines the reactive reference between low voltage slope start and high voltage slope start while following the slopes.

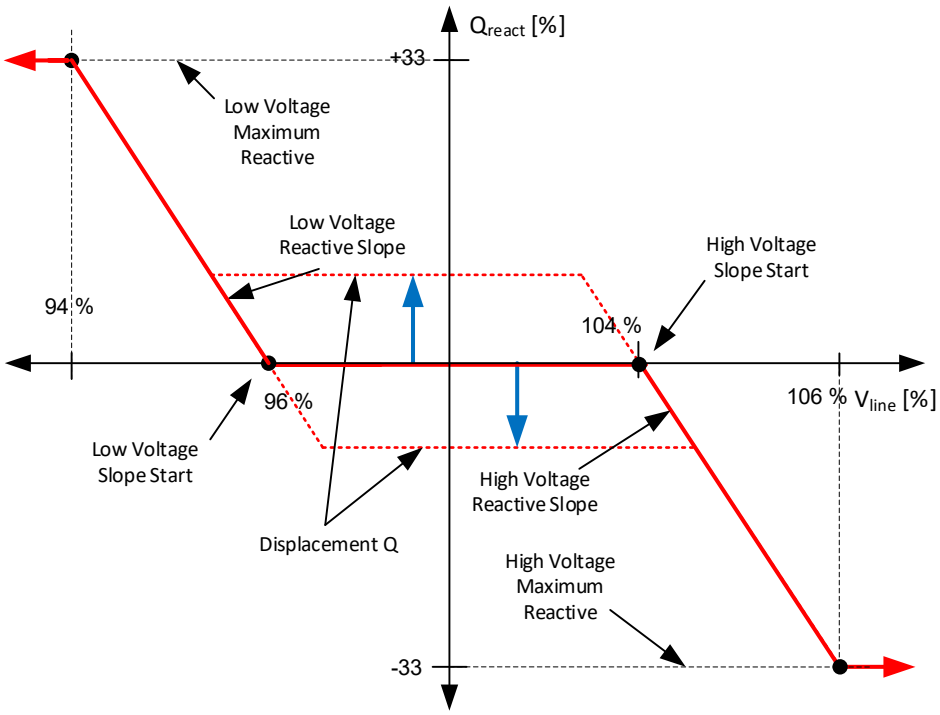

2.11.4.2.10 5671 Q(U) Reactive Power Filter Tc

Filtering time for Q(U) function output.

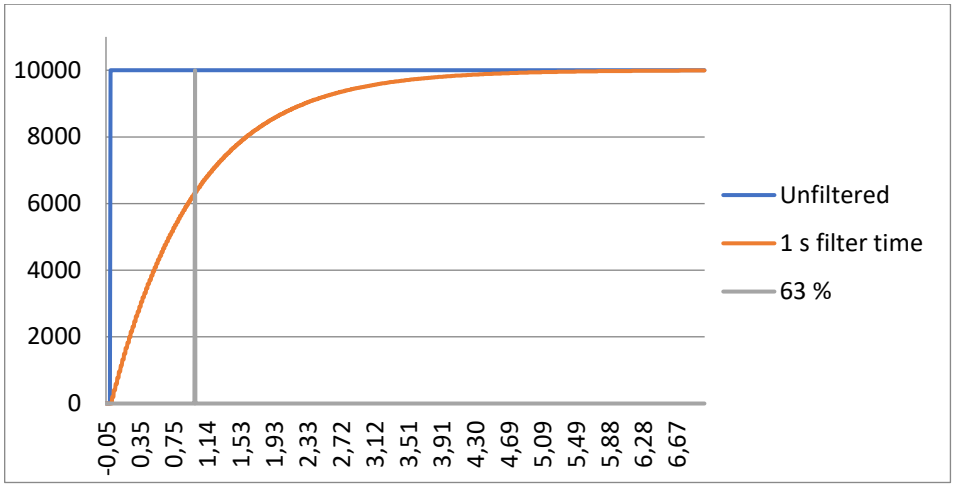

2.11.4.2.11 5677 Q(U) Power Lock In Level

Absolute active power feed is not started until power is above this level. Reactive power is fed until absolute active power is below Lock Out Power level.

2.11.4.2.12 5678 Q(U) Power Lock Out Level

When reactive power feed is started based on Lock In Power, this parameter defines the level when reactive power feed is stopped.

2.11.4.2.13 5679 Q(U) Power Factor Limit

Cos Phii limit reduces reactive power when active power decreases to keep minimum cos phi.

7.11.5.3. Power Factor

Power Factor reference does not follow the sign convention from parameter 2.8.2.11, 5098, Power Factor Sign Mode.

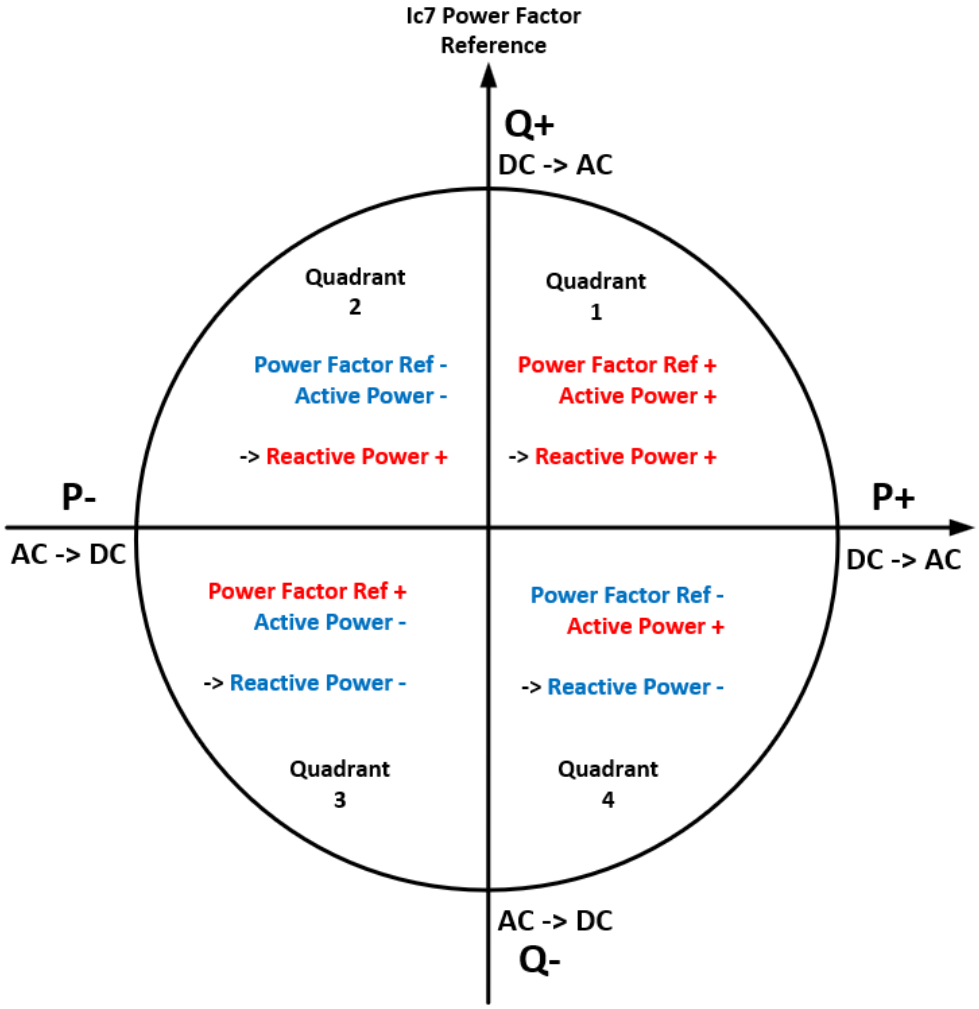

2.11.4.3.1 5630 Power Factor Reference

Direct power factor reference. Active when parameter 2.11.4.3.2 No. 5550 Power Factor Reference is 0 / Static parameter

2.11.4.3.2 5550 Power Factor Reference Mode

Select Power Factor reference mode.

0 = Static parameter ID5630 Power Factor Reference.

1 = Power Factor (P) Curve

2.11.4.3.3 5551 Power Factor Lock In Voltage

Voltage level when Power Factor control is started if active power is above 50 %.

2.11.4.3.4 5552 Power Factor Lock Out Voltage

Voltage level when power factor control is stopped.

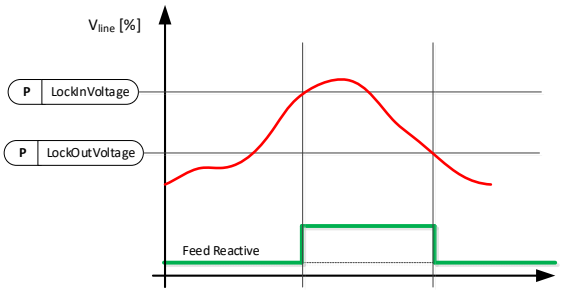

2.11.4.3.5 5607 Power Factor Reference Filter Tc

Reactive current reference filtering time from power factor reference.

2.11.4.3.6 5675 CosPhi(P) Curve Power points (X)

CosPhii(P) function power points as a percentage of active power.

2.11.4.3.7 5676 CosPhi(P) Curve Power Factor Points (Y)

CosPhii(P) function power factor points.

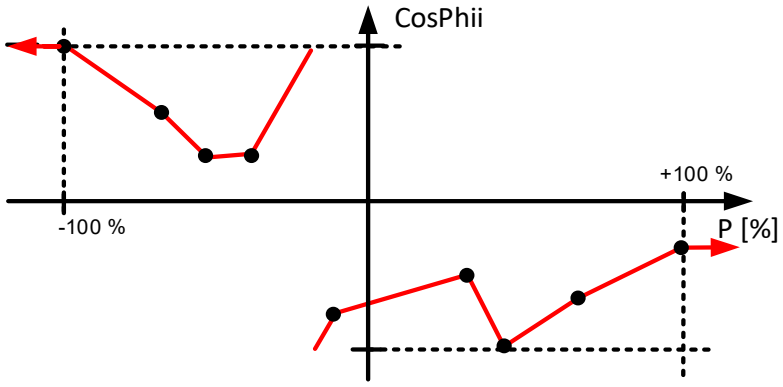

7.11.5.4. Q(P) Reactive Power Function

Set reactive power in relation to active power. Use negative reference for low voltage, negative reactive reference increases grid voltage. Both parameters have 10 input values. Between these input values reactive power reference is scaled linearly.

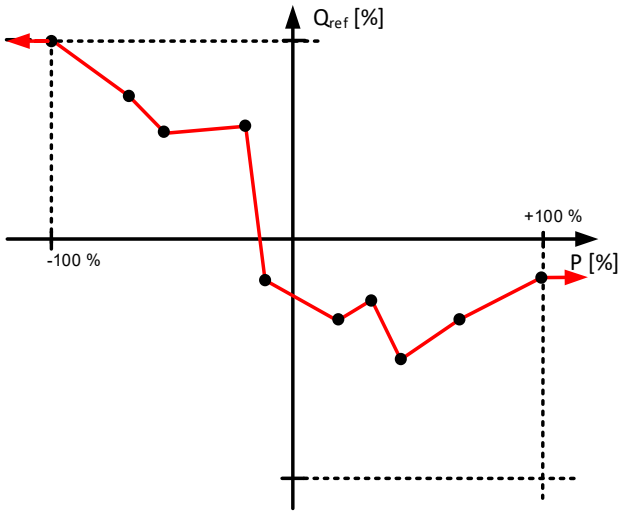

2.11.4.4.1 5614 Q(P) Functions Power points (X)

Defines Power points (X-axis) for the curve.

2.11.4.4.2 5615 Q(P) Functions Reactive points (Y)

Defines reactive power points (Y-axis) for the curve.

2.11.4.4.3 5672 Q(P) Reactive Power Filter Tc

Reactive power reference filtering time from Q(P) function.

2.11.4.4.4 5673 Q(P) Curve Lock In Voltage

Voltage lock in level for Q(U) function. If zero Q(P) function active always.

2.11.4.4.5 5674 Q(P) Curve Lock Out Voltage

Voltage lock out level for Q(P) function after lock in voltage level has been exceeded.

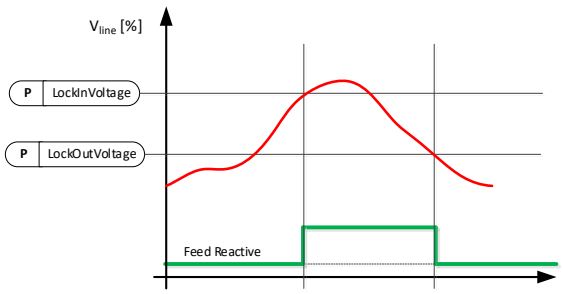

7.11.5.5. Q(U) Reactive Power Curve

The Q(U) Reactive Power Curve function provides voltage-dependent reactive power control using a user-definable curve. This is an alternative to the slope-based Q(U) function and allows for more flexible reactive power response to grid voltage variations. The curve defines the relationship between grid voltage (X-axis) and reactive power output (Y-axis).

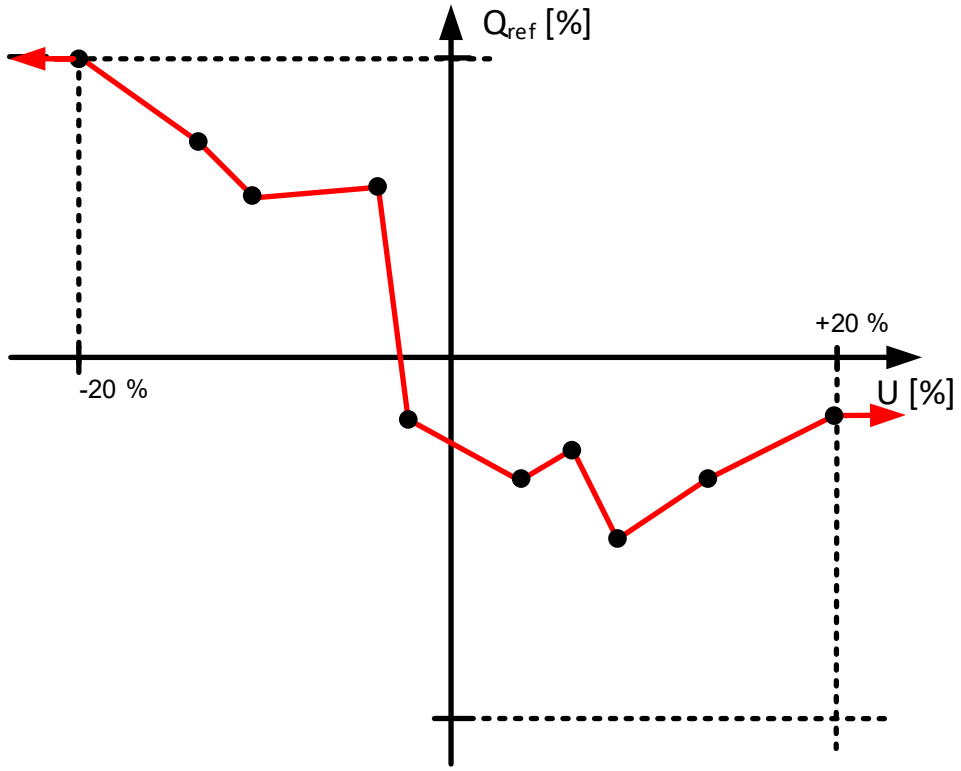

2.11.4.5.1 5719 Q(U) Curve Voltage Points (X)

Defines the voltage points (X-axis) for the Q(U) reactive power curve. Up to 10 voltage points can be specified to create the curve shape. Values must be in ascending order (each value must be greater than the previous). If a value is less than or equal to the previous value, that point and all subsequent points are ignored. Voltage values are relative to nominal voltage with voltage offset adjustment applied

2.11.4.5.2 5720 Q(U) Curve Reactive Points (Y)

Defines the reactive power points (Y-axis) corresponding to each voltage point in the Q(U) curve. Each Y point corresponds to the X point at the same array index. The function interpolates linearly between the defined points.

2.11.4.5.3 5722 Q(U) Reactive Curve Filter Tc

Time constant for first-order low-pass filter applied to the reactive power reference calculated from the Q(U) curve. A longer time constant provides a slower, more stable response but reduces the speed of voltage support. A value of 0 disables filtering and provides immediate response to voltage changes.

2.11.4.5.4 5723 Q(U) Reactive Power Curve Voltage Adjustment Tc

Time constant for the automatic voltage offset adjustment filter when Q(U) Curve Voltage Offset Adjustment is enabled. This filter determines how quickly the curve's voltage reference point adapts to the average grid voltage. A longer time constant means slower adaptation to grid voltage changes.

2.11.4.5.5 5724 Q(U) Curve Voltage Offset Adjustment

Enables or disables automatic adjustment of the Q(U) curve's voltage reference point.

Manual voltage offset

Uses the fixed voltage offset specified in Q(U) Curve Voltage Offset. The curve operates relative to this fixed voltage reference. Suitable when the nominal grid voltage is stable and well-defined

Automatic voltage offset

The curve's voltage reference automatically adjusts to track the average grid voltage. Compensates for long-term voltage variations or different nominal voltage levels. Uses the time constant specified in Q(U) Reactive Power Curve Voltage Adjustment Tc for filtering. Suitable for grids with varying voltage levels or when nominal voltage is uncertain

2.11.4.5.6 5725 Q(U) Curve Voltage Offset

Manual voltage offset applied to the Q(U) curve's voltage reference point. This parameter shifts the entire curve left or right on the voltage axis.

Use this parameter to align the curve with the actual grid voltage when it differs from the nominal voltage setting.

7.11.6. Reactive Current Functions

7.11.6.1. FRT (Fault Ride-Through)

Reactive current functions are used generally for Fault Ride-Through situations when the grid has a fault that is usually generating an undervoltage situation in the grid, or in some cases an overvoltage situation. Reactive current functions are meant to feed reactive current to support grid voltage and thus help to isolate the fault site from the grid. The following figure shows a typical U/t curve where U_3 may be zero voltage and t_0 to t_1 a few hundreds of milliseconds. And the times below U_1 can be several seconds to minutes.

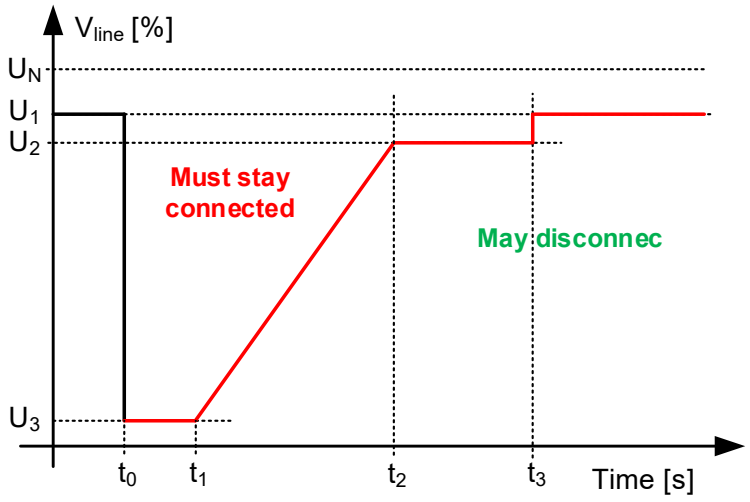

7.11.6.2. General Settings

2.11.5.1.1 5658 Forced Active Power Feed During FRT

Feeds active power to the grid during the FRT if the power direction before FRT was towards the grid.

2.11.5.1.2 5713 Dynamic Grid Support Mode

Select operation mode for dynamic grid support.

0 = FRT Reactive Current Priority

Reactive current has priority during FRT situations.

1 = FRT Active Current Priority

Active current has priority during FRT situations.

2.11.5.1.3 5782 Dynamic Grid Support Type

Select type of grid support.

0 = EN 50549

Reactive current behavior is based on the EN 50549 standard.

1 = DK TR 3.3.1

Reactive current behavior is based on the TECHNICAL REGULATION 3.3.1 – REVISION 6 Denmark standard.

Additional parameters:

2.11.5.2.11, 5783, Dynamic Grid Support Low Slope Start

2.11.5.2.12, 5784, Dynamic Grid Support High Slope Start

7.11.6.3. Dynamic Grid Support

Dynamic grid support feeds reactive current during grid faults. Positive and negative sequence faults are separately controlled.

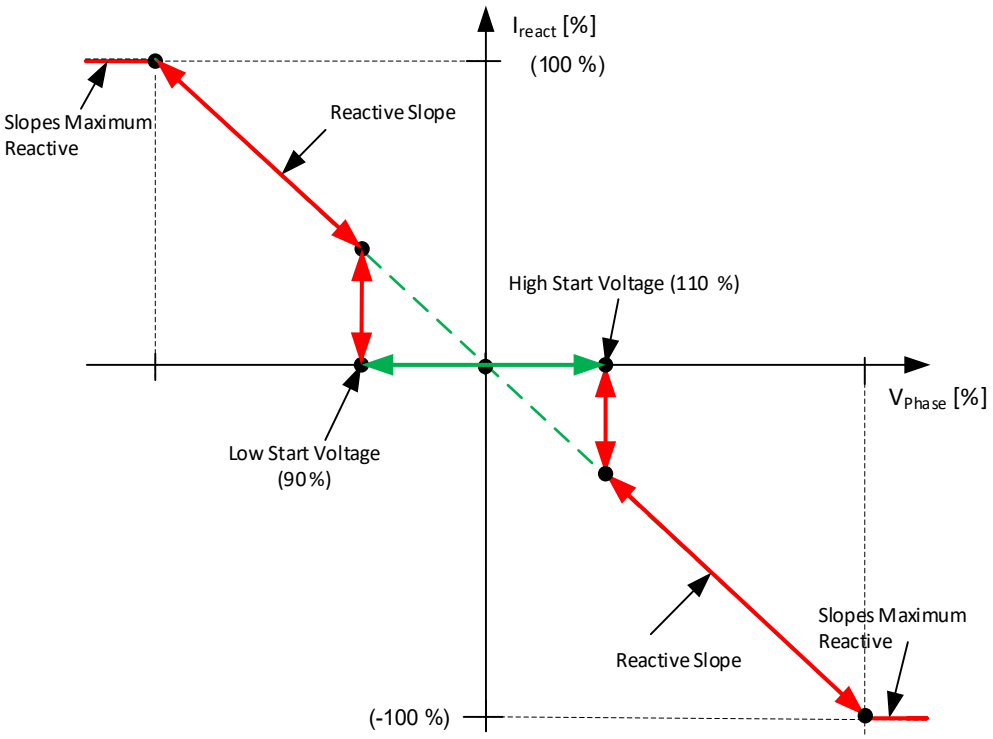

2.11.5.2.1 5648 High Start Voltage %

2.11.5.2.2 5649 Low Start Voltage %

These two parameters define the normal operation range. Function is disabled if both values are not different than zero. Reactive current injection is started if one or more of the phase voltages exceed the upper or lower limit. Reactive injection is stopped after phase voltages return inside the normal operation range.

2.11.5.2.3 5650 Positive Sequence Reactive Slope %/%

Defined positive sequence reactive current injection current slope for positive sequence voltage. Range 0 to 6. Defines how many percentage points reactive will change when positive sequence voltage changes one percent.

2.11.5.2.4 5651 Negative Sequence Reactive Slope %/%

Defined negative sequence reactive current injection slope for negative sequence voltage. Range 0 to 6. Defines how many percentage points reactive will change when negative sequence voltage changes one percent.

2.11.5.2.5 5652 Slopes Maximum Reactive %

Maximum limit for positive and negative sequence reactive current.

2.11.5.2.6 5653 Reset Hysteresis %

Hysteresis for normal operation range. Phase voltages need to return inside the normal operation range plus this hysteresis before reactive current injection is reset.

2.11.5.2.7 5655 Positive Sequence Trigger Limit %

2.11.5.2.8 5654 Negative Sequence Trigger Limit %

Reactive current injection is also started when there is a sudden change in positive or negative sequence voltage. Current injection is started when instantaneous pos/neg sequence voltage exceeds the threshold compared to 1 second average pos/neg sequence voltage. Reactive injection is stopped after delay (ID5656) when phase voltages have returned inside the normal operation range (ID5648 & ID5649).

2.11.5.2.9 5656 Positive/Negative Sequence Control Off Delay s

The delay when the sudden change reactive injection is reset after phase voltages have returned inside the normal operation range.

2.11.5.2.11 5783 Dynamic Grid Support Low Slope Start

EN 50549 standard starts the reference calculation with slope from nominal voltage (100 %), in DK TR 3.3.1 standard slope is started from 90 % or from 85 %, depending on location, DK1 or DK2.

2.11.5.2.12 5784 Dynamic Grid Support High Slope Start

EN 50549 standard starts the reference calculation with slope from nominal voltage (100 %), in DK TR 3.3.1 standard slope starting is not defined for over voltage. However, this parameter makes it possible to adjust this starting point.

The following picture shows behavior if high and low start voltages are further than the slope start points.

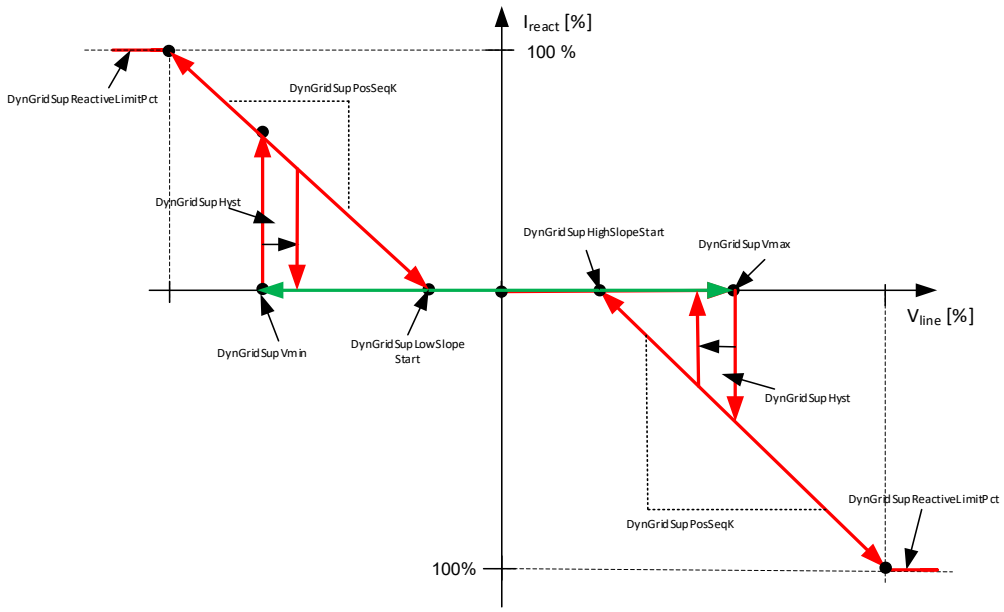

2.11.5.2.10 5657 Negative Sequence Control Mode

[Temporary description.

Keep this “1” when using Dynamic Grid Support]

0: No control,

1: Balanced currents

(activates negative sequence control with zero reference to increase negative sequence impedance),

7.11.7. Active Power Control

7.11.7.1. General Settings

2.11.6.1.1 5634 Power Increase Rate Limit

2.11.6.1.2 5789 Power Decrease Rate Limit

Define the power ramp rate values that are used during normal operation when grid codes are active.

There are different ramp rates for connection and reconnection situations, and several power reference and limit functions have different return to normal operation ramp rates.

7.11.7.2. Frequency Sensitive Mode

Base current reference is still operational compared to the same function in Grid Code group where Base Current reference is frozen during the event. This function makes small (2-12%) changes to active power based on grid frequency. Function is meant to control small frequency changes to maintain grid stability.

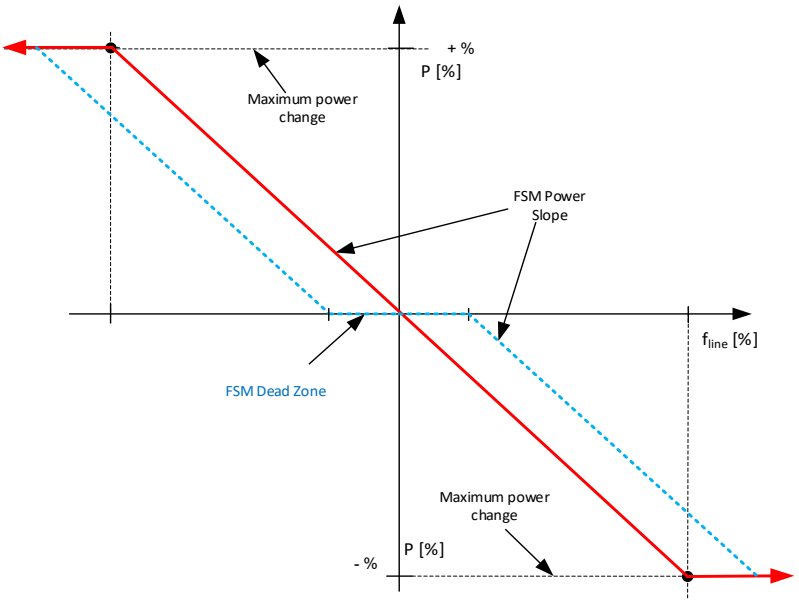

2.11.6.2.1 5637 FSM Power Slope

Active power change rate when frequency deviates from nominal.

2.11.6.2.2 5636 FSM Dead Zone

Frequency zone at nominal frequency when power is not adjusted.

2.11.6.2.3 5638 FSM Maximum Power Change

Maximum value that function and increase or decrease power.

2.11.6.2.4 5645 FSM Force to Power Ref, Mode

Select whether FSM activation forces the converter to operate in grid current/power reference mode.

FALSE: Converter keeps its operation mode but may not respond to FSM reference.

TRUE: Converter is forced to grid current/power control mode.

2.11.6.2.5 5646 FSM Freeze Power

Select whether external power references are followed during the FSM event or grid code functions have full control of converter power control. Power/Current limits are operating normally only reference would be locked. Use this parameter when a dead zone of zero or near zero is not recommended.

FALSE: External references are followed.

TRUE: Grid Codes has total control of active power reference.

2.11.6.2.6 5647 FSM High Frequency Slope Reference

During the FSM event, high frequency selection can be made if power slope is referenced to converter nominal power (100 %) or to active power that was fed to the grid when frequency moved from dead zone areas to high frequency area of FSM.

FALSE: 100 % reference is used for the slope reference.

Slope of 10 %/% changes power by 10 % regardless of power when dead zone limit is passed.

TRUE: Active Power at activation point is used as slope reference.

Slope of 10 %/% changes power by 5 % if power is 50 % when dead zone limit is passed.

7.11.7.3. High Frequency Power Reference

With this function the drive can decrease power output to the grid automatically without upper system control when there is a frequency increase in the grid. If the converter is operating in any other grid following mode than grid current/power control, operation mode is forced to grid current/power control mode.

In standards the slopes are usually presented as “s” percent of droop. e.g. s = 5 %, see the following formula.

s = 5 % would mean 40 % / Hz.

Drive uses relative values in the slopes, thus the parameter value would be in 50 Hz grid 20 %/%.

$$s = \frac{\frac{\Delta f}{f_n}}{\frac{\Delta P}{P_{ref}}}$$

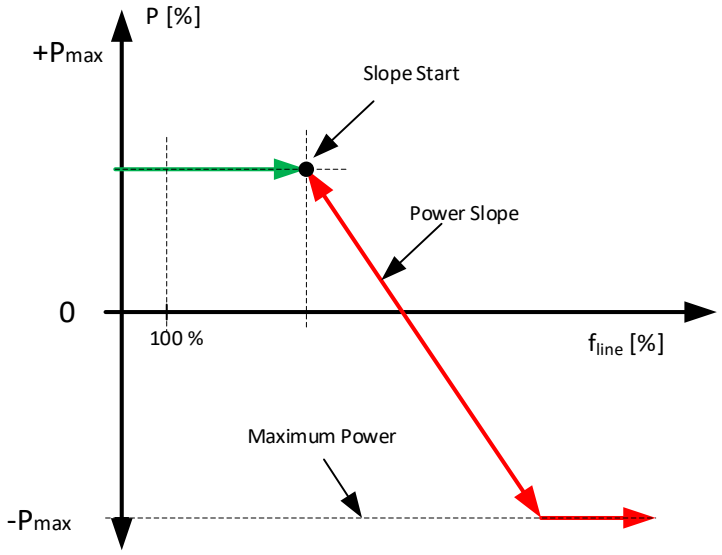

2.11.6.3.1 5619 High Frequency Slope Start

High Frequency point where power starts to decrease with the High Frequency Power Slope (5617) if frequency continues to increase.

2.11.6.3.2 5617 High Frequency Power Slope

Decrease rate of active power in percents of one percent increase in frequency. Slope can be given as a positive value, power is reduced.

50 Hz grid 1 % -> 0,5 Hz. 1,0 Hz -> 2 %.

60 Hz grid 1 % -> 0,6 Hz, 1,0 Hz -> 1,666… %

2.11.6.3.3 5639 High Frequency Power Release Ramp

Ramp rate of power increase. Regardless of whether Lock Off frequency limit is used.

2.11.6.3.4 5640 High Frequency Log Off frequency

Log Off frequency when power starts to return to the level before going above log in frequency. Enabling this function will keep the minimum reached power level even if frequency decreases but does not exceed log of frequency.

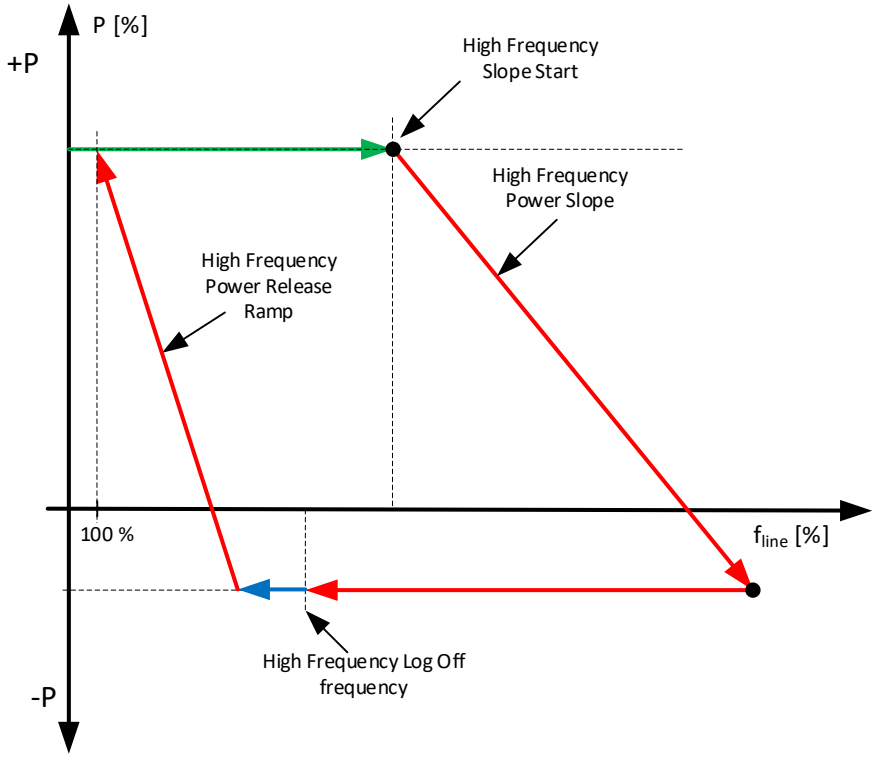

2.11.6.3.5 5643 High Frequency Freeze Power

Select if external power references are followed during the high frequency event or grid code functions have full control of converter power control. Power/Current limits are operating normally, only reference would be locked.

FALSE: External references are followed.

TRUE: Grid Codes has total control of active power reference.

2.11.6.3.6 5659 High Frequency Slope Reference

Selection for slope reference. Power change as %/% can be scaled to converter nominal power (100 %) or to power that was at the time high frequency slope start point was exceeded. For example, if active power was +50 % then slope is only half of the set value. Also, maximum change is 50 % of High Frequency Maximum Power.

0 = Scaled to 100 % Pn

1 = Scaled to Actual Power at Slope Start

2.11.6.3.7 5683 High Frequency Start Delay

Delay to start the power limitation when High Frequency Slope start limit has been exceeded. There is no further delays once limit has been exceeded.

2.11.6.3.7 5685 High Frequency Power Release Delay

Delay to release the power limit after grid frequency has fallen below the lock off frequency limit.

2.11.6.3.9 5797 HFPR Power Filter Time Constant

Power reference filtering time.

For VDE set to 0,400 s

2.11.6.3.10 5798 HFPR Ramp-Up Rate

Power reference ramp rate, after filtering.

For VDE set to 150 %/s

2.11.6.3.11 5799 HFPR Ramp-Down Rate

Power reference ramp rate, after filtering.

For VDE set to 150 %/s

7.11.7.4. Low frequency power reference

With this function the converter can increase power output to the grid automatically without upper system control when there is a frequency decrease in the grid. If the converter is operating in any other grid following mode than grid current/power control, operation mode is forced to grid current/power control mode.

In standards the slopes are usually presented as “s” percent of droop. e.g. s = 5 %, see the following formula.

s = 5 % would mean 40 % / Hz.

Drive uses relative values in the slopes, thus parameter value would be in 50 Hz grid 20 %/%.

$$s = \frac{\frac{\Delta f}{f_n}}{\frac{\Delta P}{P_{ref}}}$$

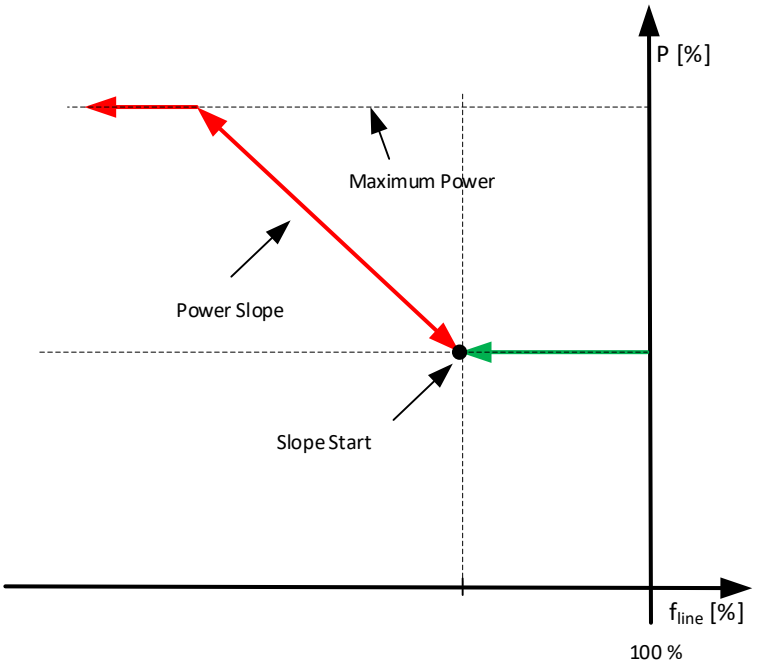

2.11.6.4.1 5620 Low Frequency Slope Start

Low Frequency point where power is started to increaser with the Low Frequency Power Slope (5622) if frequency continues to decrease.

2.11.6.4.2 5622 Low Frequency Power Slope

Increase rate of active power in percents of one percent decrease in frequency. Slope can be given as a positive value, power is increased to the grid.

50 Hz grid 1 % -> 0,5 Hz. 1,0 Hz -> 2 %.

60 Hz grid 1 % -> 0,6 Hz, 1,0 Hz -> 1,666… %

2.11.6.4.3 5642 Low Frequency Power Release Ramp

Ramp rate of power increase. Regardless of whether Lock Off frequency limit is used.

2.11.6.4.4 5641 Low Frequency Log Off Frequency

Lock Off frequency when power starts to return to the level before going below the lock in frequency. Enabling this function keeps maximum reached power level even if frequency decreases but not exceed log off frequency.

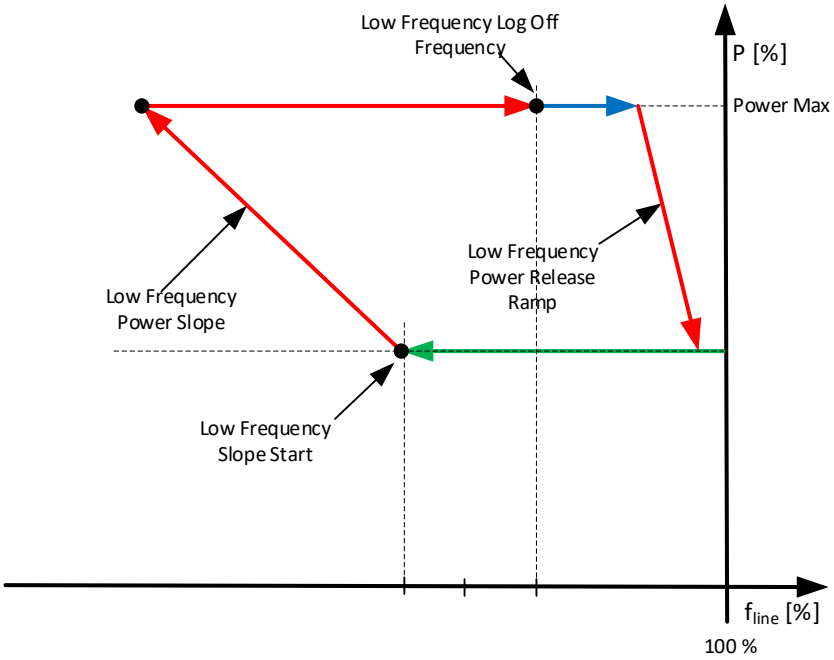

2.11.6.4.5 5644 Low Frequency Freeze Power

Select if external power references are followed during the low frequency event or grid code functions have full control of converter power control. Power/Current limits are operating normally, only reference would be locked.

FALSE: External references are followed.

TRUE: Grid Codes has total control of active power reference.

2.11.6.4.6 5717 Low Frequency Slope Reference

Selection for slope reference. Power change as %/% can be scaled to converter nominal power (100 %) or to power that was at the time high frequency slope start point was exceeded. For example, if active power was +50 % then slope is only half of the set value. Also, maximum change is 50 % of High Frequency Maximum Power.

0 = Scaled to 100 % Pn

1 = Scaled to Actual Power at Slope Start

2.11.6.4.7 5684 Low Frequency Start Delay

Delay to start the power increase when Low Frequency Slope start limit has been exceeded. There are no further delays once limit has been exceeded.

2.11.6.4.8 5800 LFPR Power Filter Time Constant

Power reference filtering time.

For VDE set to 0,400 s

2.11.6.4.9 5801 LFPR Ramp-Up Rate

Power reference ramp rate, after filtering.

For VDE set to 150 %/s

2.11.6.4.10 5802 LFPR Ramp-Down Rate

Power reference ramp rate, after filtering.

For VDE set to 150 %/s

7.11.7.5. Low Frequency Power Reference 2

Low Frequency Power Reference 2 (LFPR2) is an advanced frequency support function that provides active power response to under-frequency events. This function is designed to comply with AS/NZS 4777.2:2020 Section 4.5.3.2 and supports both single-mode and multi-mode inverters with energy storage.

Automatically increases power output when grid frequency drops. Supports multi-mode inverters that can charge/discharge. Includes power ramping control for smooth frequency recovery. Uses max-hold logic to maintain support during frequency fluctuations

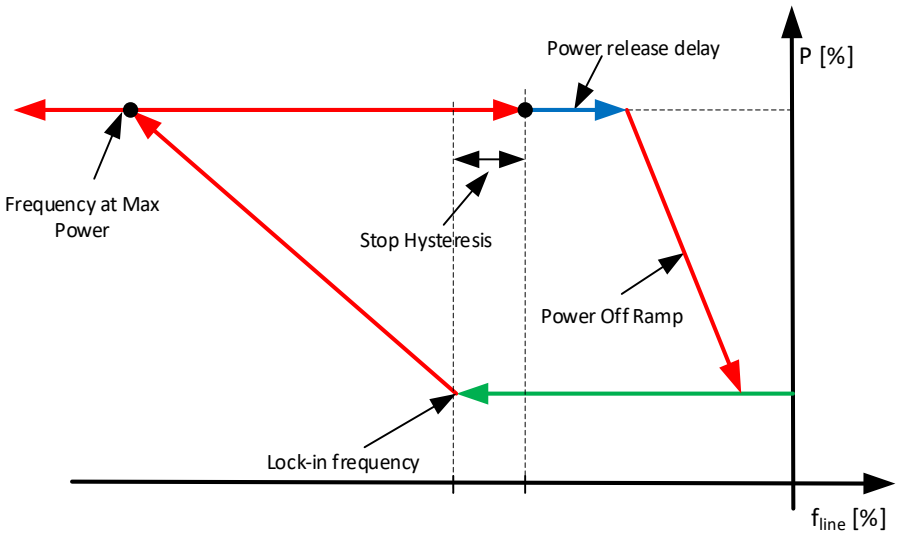

2.11.6.5.1 5766 LFPR2 Start Frequency

The frequency threshold at which the LFPR2 function activates. When the grid frequency falls below this value, the inverter begins to increase its power output to support the grid.

2.11.6.5.2 5767 LFPR2 Frequency at Max Power

The frequency at which maximum power output is reached. The power output increases linearly from current power at LFPR2 Lower Limit Cut-Out Frequency to maximum available power at LFPR2 Frequency at Max Power.

2.11.6.5.3 5770 LFPR2 Stop Hysteresis

Hysteresis value added to LFPR2 Lower Limit Cut-Out Frequency to determine the deactivation frequency. This prevents rapid on/off cycling when frequency fluctuates near the activation threshold.

2.11.6.5.4 5771 LFPR2 Power Release Delay

Time delay before the increased power output is released after the grid frequency returns above the deactivation threshold (LFPR2 Lower Limit Cut-Out Frequency + Stop Hysteresis).

2.11.6.5.5 5772 LFPR2 Zero Charge Freq.

For multi-mode inverters with energy storage: the frequency at which charging must be reduced to zero before additional power generation begins.

2.11.6.5.6 5788 LFPR2 Power Off Ramp

Rate at which the power output returns to the normal reference after the Power Release Delay expires.

7.11.7.6. High Frequency Power Reference 2

High Frequency Power Reference 2 (HFPR2) is an advanced frequency support function that provides active power response to over-frequency events. This function is designed to comply with AS/NZS 4777.2:2020 Section 4.5.3.3 and supports both single-mode and multi-mode inverters with energy storage.

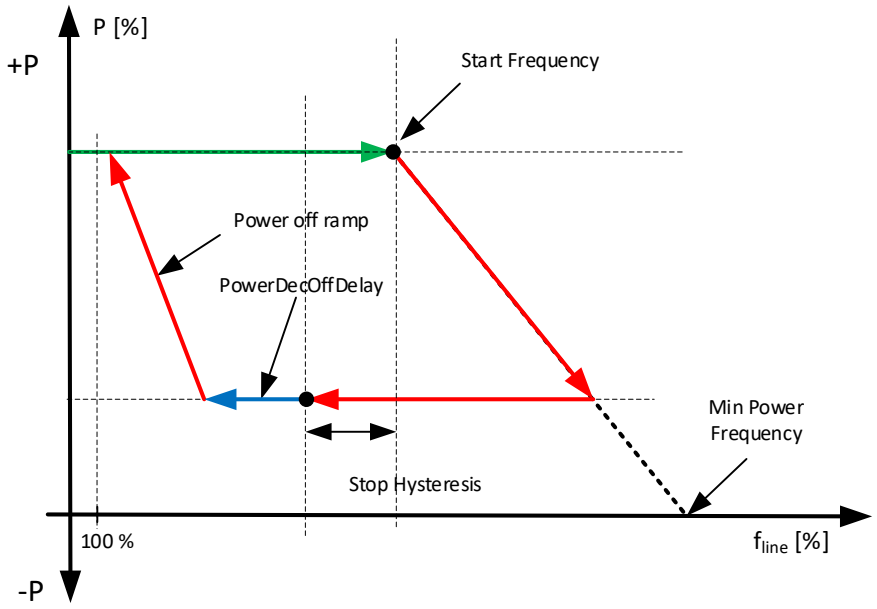

2.11.6.6.1 5774 HFPR2 Start Frequency

The frequency threshold at which the HFPR2 function activates. When the grid frequency rises above this value, the inverter begins to reduce its power output (or increase charging for multi-mode inverters) to support the grid.

2.11.6.6.2 5775 HFPR2 Min Power Frequency

The frequency at which minimum power output (or maximum charging) is reached. The power output decreases linearly from current power at Start Frequency to minimum power at Min Power Frequency.

2.11.6.6.3 5776 HFPR2 Zero Generation Frequency

For multi-mode inverters with energy storage: the frequency at which power generation reaches zero before switching to charging mode.

2.11.6.6.4 5777 HFPR2 Stop Hysteresis

Hysteresis value subtracted from Start Frequency to determine the deactivation frequency. This prevents rapid on/off cycling when frequency fluctuates near the activation threshold.

2.11.6.6.5 5778 HFPR2 Power Release Delay

Time delay before the reduced power output is released (returns to normal) after the grid frequency falls below the deactivation threshold (Start Frequency - Stop Hysteresis).

2.11.6.6.6 5787 HFPR2 Power Off Ramp

Rate at which the power output returns to the normal reference after the Power Release Delay expires.

7.11.8. Limit Controls

7.11.8.1. General Settings

2.11.7.1.1 5702 Grid Code Active Current Limit

Current limit for active current when grid codes are active.

2.11.7.1.2 5714 Grid Code Reactive Current Limit

Current limit for reactive current when grid codes are active.

7.11.8.2. Restricted Grid Support

Limited Grid Support will force active power to zero and does not feed reactive current to the grid in case voltage falls below the set Voltage Level. One use case is when network operation is testing specific equipment that is in the same grid and they do not want other power generators to participate, for example a short circuit test.

2.11.7.2.1 5631 Restricted Grid Support Mode

0 = Not used,

1 = Enabled, current is forced to zero in case voltage fall below set limit.

2.11.7.2.2 5632 Restricted Low Voltage

When the restricted grid support function is active and voltage falls below this level, active and reactive currents are controlled to zero.

2.11.7.2.3 5633 Restricted High Voltage

When the restricted grid support function is active and voltage exceeds this level, active and reactive currents are controlled to zero.

2.11.7.2.4 5781 Active/Reactive Limit Selection

7.11.8.3. High Voltage Power Limit

This function limits output power when grid voltage exceed set level.

2.11.7.3.1 5680 HVPL Power Limiting Start Voltage

Grid Voltage level when power is started to limit with the slope defined by HCPL Power Limit Slope.

2.11.7.3.2 5681 HVPL Power Limit Slope

Slope that is used to limit power after grid voltage has exceeded the level HVPL Power Limiting Start Voltage.

2.11.7.3.3 5718 HVPL Power Limit Tc

Filtering time constant for high voltage power limit.

7.11.8.4. Limited Post Fault Active Power Recovery

Due to grid stability requirements and adherence to grid codes, the Limited Post Fault Active Power Recovery function manages the return to normal active power output after a fault ride-through event, which inherently introduces a controlled recovery. During FRT events, the inverter may reduce its active power output to support the grid with reactive power. The function then governs the recovery process, preventing an immediate power recovery that, while potentially faster, could destabilize the grid and violate grid code stipulations.

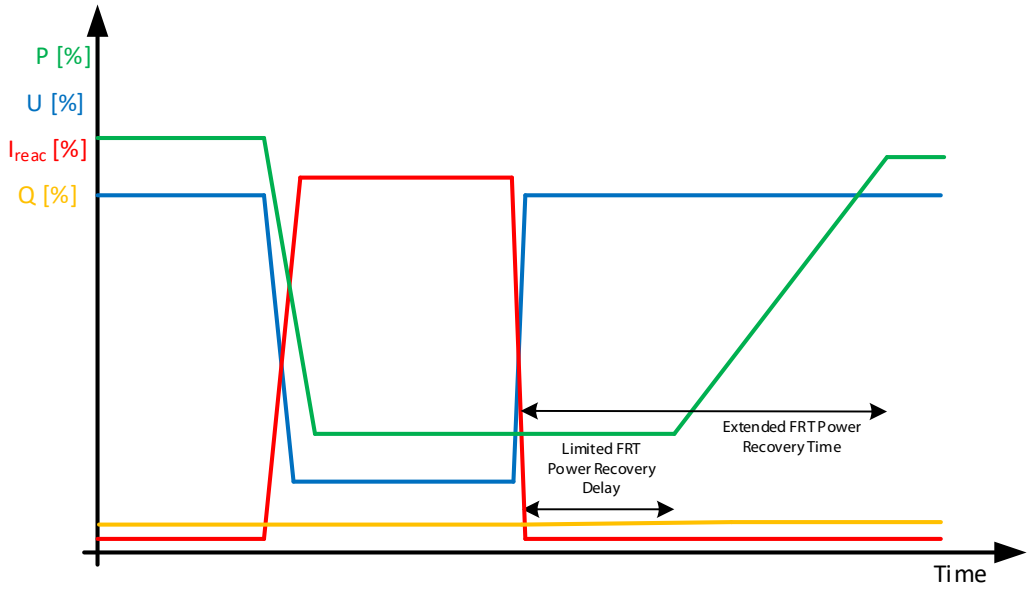

2.11.7.4.1 5734 Limited FRT Power Recovery Enable

Enable/disable switch for the Limited FRT Power Recovery function. When enabled (1), the function actively manages power recovery after FRT events. When disabled (0), standard power recovery behavior is used. Just activation will most likely reduce active power down to zero if active power is even momentarily reduced during the FRT.

2.11.7.4.2 5737 Limited FRT Power Recovery Delay

Configurable delay before active power recovery activation. During this time minimum active power is maintained that was monitored during the FRT.

2.11.7.4.3 5736 Limited FRT Power Recovery Rate

Defines the rate at which active power recovers after an FRT event when using fixed-rate recovery mode. This parameter sets the slope of power increase during the recovery phase.

2.11.7.4.4 5738 Extended FRT Power Recovery Time

Defines the total time duration for extended FRT active power recovery. When set to a value greater than 0.001s, the recovery rate is automatically calculated based on the power difference and recovery time, Limited FRT Power Recovery Rate defines maximum rate when recovery time is used.

7.11.8.5. High Voltage Power Limit 2

High Voltage Power Limit 2 (HVPL2) is a voltage-dependent power limiting function that reduces active power output when grid voltage rises above normal levels. This function helps prevent further voltage rise and supports grid stability during high voltage conditions.

Power limiting begins at the Start Voltage and increases linearly until reaching the End Voltage, where maximum limiting is applied. The relationship between voltage and power limit is defined by two points: (Start Voltage, Start Power Limit) and (End Voltage, End Power Limit).

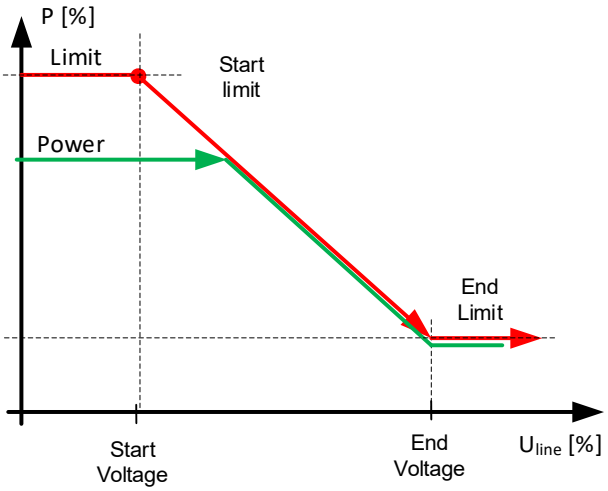

2.11.7.5.1 5749 High Voltage Start Voltage 2

The voltage level at which power limiting begins. Below this voltage, no power limiting is applied and the inverter operates at its normal power reference.

2.11.7.5.2 5759 High Voltage Start Power Limit 2

The power limit applied at the Start Voltage. This is typically 100%, meaning no limitation at the start of the voltage range.

2.11.7.5.3 5748 High Voltage End Voltage 2

The voltage level at which maximum power limit is reached. At this voltage and above, the End Power Limit is applied.

2.11.7.5.4 5747 High Voltage End Power Limit 2

The maximum power limit applied at the End Voltage and above. This defines how much power reduction occurs at high voltage.

7.11.8.6. Low Voltage Power Limit 2

Low Voltage Power Limit 2 (LVPL2) is a voltage-dependent power limiting function that reduces active power input when grid voltage drops below normal levels. This function helps maintain system stability during low voltage conditions.

Power limiting begins at the Start Voltage and increases linearly until reaching the End Voltage, where maximum limiting is applied. The relationship between voltage and power limit is defined by two points: (Start Voltage, Start Power Limit) and (End Voltage, End Power Limit).

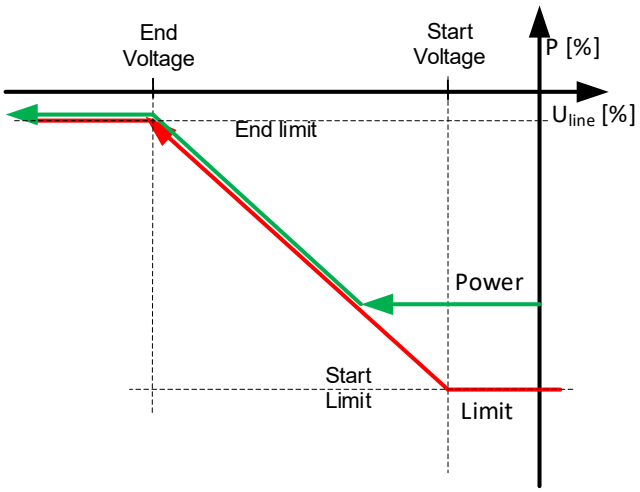

2.11.7.6.1 5761 Low Voltage Start Voltage 2

The voltage level at which power limiting begins. Above this voltage, no power limiting is applied, and the inverter operates at its normal power reference.

2.11.7.6.2 5762 Low Voltage Start Power Limit 2

The power limit applied at the Start Voltage. This is typically 100%, meaning no limitation at the start of the voltage range.

2.11.7.6.3 5763 Low Voltage End Voltage 2

The voltage level at which maximum power limit is reached. At this voltage and below, the End Power Limit is applied.

2.11.7.6.4 5764 Low Voltage End Power Limit 2

The maximum power limit applied at the End Voltage and below. This defines how much power reduction occurs at low voltage.

7.11.9. Calibration

Calibration parameters for grid code operations.

2.11.19.1 5742 Active Power Correction at -100 % load

Calibration factor for power signal when charging at 100 % power.

2.11.19.2 5740 Active Power Correction at 0 % load

Calibration factor for power signal when running at zero power.

2.11.19.3 5741 Active Power Correction at +100 % load

Calibration factor for power signal when discharging at 100 % power.

7.11.10. Field Testing

2.11.1.2 5660 Voltage Offset

Offset to the voltage used by grid code functions. Can be used to test certain grid code functions without changing the grid voltage.

2.11.1.3 5661 Frequency Offset

Offset to the frequency used by grid code functions. Can be used to test certain grid code functions without changing the grid frequency.

2.11.20.3 5687 Grid Voltage Analog Input

Select analog input terminal for grid voltage for testing purposes.

2.11.20.4 5689 Grid Voltage Analogue Min.

Grid voltage signal level at minimum analog input level.

2.11.20.5 5690 Grid Voltage Analog Max.

Grid voltage signal level at maximum analog input level.

2.11.20.6 5688 Grid Frequency Analog Input

Select analog input terminal for grid frequency for testing purposes.

2.11.20.7 5692 Grid Frequency Analogue min.

Grid frequency signal level at minimum analog input level.

2.11.20.8 5691 Grid Frequency Analogue Max.

Grid frequency signal level at maximum analog input level.

8. Maintenance & Service (Menu Index 3)

This group contains auxiliary parameters for monitoring, commissioning, and servicing the converter.

8.1. Software Information (Menu Index 3.1)

This group houses details about the software.

3.1.1 151 Application Version

Shows the version of the application software.

8.2. Events (Menu Index 3.2)

When encountering issues, the converter may issue events of the Info, Warning or Fault response type. This group contains information and parameters for monitoring and simulating these events.

Active Events

This is an active events screen shown only in the control panel. Only active warnings and faults events are displayed in this screen – info events are not. With MyDrive® Insight, the same information is available in the “Events” screen. Check the available information via the control panel or MyDrive® Insight.

All Events

This is the event history screen shown only in the control panel. With MyDrive® Insight, the same information is available in the “Events” screen. Check the available information via the control panel or MyDrive® Insight.

8.3. Event Simulation (Menu Index 3.2.3)

The event simulation feature can be used to trigger any converter event without meeting the event criteria. This can be used to safely preview how the converter behaves during specific events. For instance, some events may trigger other functions, such as indications through digital outputs. This feature is useful for checking the setup, configuration, and validity of such functions during specific events.

Notice

This feature is for commissioning and testing purposes. It is not meant for functional use.

Warning

This feature can stop the converter and possibly trigger external events. Do not use without proper knowledge of the system.

How to use:

1. Refer to the Events Summary Table to get the event number and details for the specific event.
2. Set the event number with parameter No. 1402.
3. Activate the simulation by setting parameter No. 1401 to the desired simulation response.
4. To end the simulation set parameter No. 1401 back to “Disabled”.
5. If required, give a Fault Reset command to acknowledge a simulated event.
6. If required, reboot the converter to acknowledge “Trip Locked” events.

P3.2.3.1 1400 Simulate Event

Simulates the selected event with the selected response. Simulation begins when changing value from Disabled. To reset a simulated event, this parameter needs to be set back to Disabled first.

0 Disabled

Event simulator is inactive

1 Lowest Response

The event selected with parameter No. 1402 is activated with its lowest event response.

Note that if the event can be configured with a response parameter, the response parameter’s setting will apply to the simulation.

10 Highest Response

The event selected with parameter No. 1402 is activated with its highest event response.

Note that if the event can be configured with a response parameter, the response parameter’s setting will apply to the simulation.

P3.2.3.2 1401 Simulate Persisting Event

Select a response to trigger a persisting simulated event. Set back to 0 to allow a reset. Simulates the selected event with the selected response. Simulation begins when changing value from Disabled. To reset a simulated event, this parameter needs to be set back to Disabled first.

0 Disabled

Event simulator is inactive

1 Lowest Response

The event selected with parameter No. 1402 is activated with its lowest event response.

Note that if the event can be configured with a response parameter, the response parameter's setting will apply to the simulation.

10 Highest Response

The event selected with parameter No. 1402 is activated with its highest event response.

Note that if the event can be configured with a response parameter, the response parameter's setting will apply to the simulation.

P3.2.3.3 1402 Simulate Event Number

Select an event to be simulated by its number.

8.4. Operational Counters (Menu Index 3.3)

P3.3.1 2000 Control Unit On Time

Shows the total operating time for the control unit.

P3.3.2 2001 Power Unit On Time

Shows the total operating time for the power unit. The counter only increments if the DC link is powered.

P3.3.3 2002 Energy Consumption

Shows the energy consumed.

P3.3.4 2004 Ground Faults

Shows the total number of ground faults.

P3.3.5 2005 Overvoltage Faults

Shows the total number of overvoltage faults.

P3.3.6 2006 Overcurrent Faults

Shows the total number of overcurrent faults.

P3.3.7 2007 Short Circuit Faults

Shows the total number of short-circuit faults.

P3.3.8 2008 Number of Starts

Shows the number of starts of the converter.

P3.3.9 2009 Active Running Hours

Shows the total number of active running hours of the converter.

P3.3.10 2100 Flash 0 Wear Counter

Shows the erase count for most used flash 0 sector.

P3.3.11 2101 Flash 1 Wear Counter

Shows the erase count for most used flash 1 sector.

8.5. Tools (Menu Index 3.5)

8.5.1. Cyber security

3.5.1.1 5900 Max. Login Attempts

Set the maximum number of failed login attempts before lockout.

3.5.1.2 5901 Max. Login Cooldown Time

Maximum time before login attempts are reset after failures.

3.5.1.3 5902 Security Event Log IP

IP address of the server to which security event would be sent and logged.

3.5.1.4 5903 Security Event Log Port

Server port used for security event log transmission.

8.5.2. Troubleshooting

3.5.2.1 5904 Force Recommissioning

Recommission all nodes by clearing and reloading configuration. Use with care: This will reset node data.

0 Disabled

1 Enabled

3.5.2.2 5905 Save Diagnostic Log

Save internal logs persistently for debugging. Use with care: It's important to disable it when troubleshooting is complete.

0 Disabled

1 Enabled

3.5.2.3 5906 Service Access

Temporarily enables special debug or service interfaces for maintenance. Automatically disabled after power cycle. Use with care: May expose sensitive functions and information.

0 Disabled

1 Enabled

8.6. Backup & Restore (Menu Index 3.4)

This menu is used to access the backup and restore functions from the control panel.

8.6.1. Backup

This is a menu screen for creating parameter backups from the control panel. With MyDrive® Insight, similar options are available via the “Backup” button within the “Parameters” screen. Check the available settings via the control panel or MyDrive® Insight.

8.6.2. Restore

This is a menu for restoring parameter backups from the control panel. With MyDrive® Insight, similar options are available via the “Restore” button within the “Parameters” screen. Check the available settings via the control panel or MyDrive® Insight.

9. Customization Menu Index 5)

9.1. Basic Settings (Menu Index 5.1)

P5.1.1 2800 Date and Time

Set the actual time and date. The format is YYYY-MM-DD and HH:MM: SS.

P5.1.2 6232 Time Mode

Select the time mode. Auto enables NTP.

0 Manual

1 Auto (NTP)

P5.1.3 6233 NTP Server 1

Set the IPv4 address of the requested NTP server 1.

P5.1.4 6234 NTP Server 2

Set the IPv4 address of the requested NTP server 2.

9.2. Control Panel (Menu Index 5.2)

The parameters in this group allow the selection of 1-5 signals for monitoring in the two control panel readout screens. These screens are visible in the panel's home screen, which can be accessed by pressing the "Home"-button (the house icon). Readout Screen 1 will appear first. By navigating downwards with the arrow-buttons, Readout Screen 2 will appear.

9.2.1. Readout Screen 1 (Menu Index 5.2.1)

P5.2.1.1 Readout Field 1.1 No. 300

Select the parameter for readout field (screen 1 field 1).

0	None
9044	DC-link Voltage
9041	Grid Frequency
9040	Grid Voltage
2950	Heat Sink Temperature
2952	Control Unit Temperature
9053	Grid Power Factor
5115	DC-link Current
5117	DC-link Power
9060	Grid Current
9064	Grid Active Power
9051	Grid Reactive Power

P5.2.1.2 Readout Field 1.2 ***No. 301***

Select the parameter for readout field (screen 1 field 2).

Same selection as Field 1.1 (No. 300).

P5.2.1.3 Readout Field 1.3 ***No. 302***

Select the parameter for readout field (screen 1 field 3).

Same selection as Field 1.1 (No. 300).

P5.2.1.4 Readout Field 1.4 ***No. 303***

Select the parameter for readout field (screen 1 field 4).

Same selection as Field 1.1 (No. 300).

P5.2.1.5 Readout Field 1.5 ***No. 304***

Select the parameter for readout field (screen 1 field 5).

Same selection as Field 1.1 (No. 300).

9.2.2. Readout Screen 1 (Menu Index 5.2.2)

P5.2.2.1 Readout Field 2.1 ***No. 310***

Select the parameter for readout field (screen 2 field 1).

Same selection as Field 1.1 (No. 300).

P5.2.2.2 Readout Field 2.2 ***No. 311***

Select the parameter for readout field (screen 2 field 2).

Same selection as Field 1.1 (No. 300).

P5.2.2.3 Readout Field 2.3 ***No. 312***

Select the parameter for readout field (screen 2 field 3).

Same selection as Field 1.1 (No. 300).

P5.2.2.4 Readout Field 2.4 ***No. 313***

Select the parameter for readout field (screen 2 field 4).

Same selection as Field 1.1 (No. 300).

P5.2.2.5 Readout Field 2.5 ***No. 314***

Select the parameter for readout field (screen 2 field 5).

Same selection as Field 1.1 (No. 300).

9.2.3. Custom Status Word (Menu Index 5.3)

The custom status word can be used to define a status word for the converter, which includes freely selectable bits from a set of other status words. The following status words can be used to form the Custom Status Word:

- Grid Control Mode Selection Status Word, Application Status Word 1, Application Status Word 2, Limit Control Status Word

The custom status word can be monitored with parameter No. 2410.

The content for this word can be selected with individual parameters associated with each bit of the word. The content can be picked from other drive words. The value is given in the format of WBB, where W stands for the selection of the word and BB stands for the bit number within that word. Refer to the following table for the available content and their associated values.

Grid Control Mode Selection Status Word		**Application Status Word 1**	
100	Island Mode	200	Ready to Run
101	Droop Mode	201	Run
102	Droop with Base Load	202	Info
103	PQ Mode	203	Warning
104	AFE Mode (DC-link Voltage Control)	204	Fault
105	AFE (DC-link Current/Power)	205	PC (MyDrive Insight) Control Active
106	AFE (Active Current/Power	206	CP (Control Panle) Control Active
107		207	I/O Control Active
108		208	Fieldbus Control Active
109		209	
110		210	
111		211	Run Enable
112		212	Start Request
113		213	Quick Stop
Application Status Word 2		**Limit Control Status Word**	
300	Toggled Info	400	Pos. Active Current Limit
301	Toggled Warning	401	Neg. Active Current Limit
302	Toggled Fault	402	Short Term Current Injection Limit
303	Ready to Start Pre-charging	403	
304	Ready to Close MCB	404	DC-link Overvoltage control
305	Pre-charging Detected	405	DC-link Undervoltage control
306	Pre-charging Command	406	Pos. Active Power Limit
307	MCB Close Command	407	Neg. Active Power Limit
308	MCB Feedback	408	Pos. Reactive Current Limit
309	Switch Off Request	409	Neg. Reactive Current Limit
310	Pre Charge Ready	410	
311	MCB Close Enabled	411	
312	Ready to Switch On	412	
313	LCL Filter Energized	413	

P 5.3.1 2411 Custom Status Word B0

Select the content of the respective bit of the custom status word. The content can be picked from the above table.

P 5.3.2 2412 Custom Status Word B1

Select the content of the respective bit of the custom status word. The content can be picked from the above table.

P 5.3.3 2413 Custom Status Word B2

Select the content of the respective bit of the custom status word. The content can be picked from the above table.

P 5.3.4 2414 Custom Status Word B3

Select the content of the respective bit of the custom status word. The content can be picked from the above table.

P 5.3.5 2415 Custom Status Word B4

Select the content of the respective bit of the custom status word. The content can be picked from the above table.

P 5.3.6 2416 Custom Status Word B5

Select the content of the respective bit of the custom status word. The content can be picked from the above table.

P 5.3.7 2417 Custom Status Word B6

Select the content of the respective bit of the custom status word. The content can be picked from the above table.

P 5.3.8 2418 Custom Status Word B7

Select the content of the respective bit of the custom status word. The content can be picked from the above table.

P 5.3.9 2419 Custom Status Word B8

Select the content of the respective bit of the custom status word. The content can be picked from the above table.

P 5.3.10 2420 Custom Status Word B9

Select the content of the respective bit of the custom status word. The content can be picked from the above table.

P 5.3.11 2421 Custom Status Word B10

Select the content of the respective bit of the custom status word. The content can be picked from the above table.

P 5.3.12 2422 Custom Status Word B11

Select the content of the respective bit of the custom status word. The content can be picked from the above table.

P 5.3.13 2423 Custom Status Word B12

Select the content of the respective bit of the custom status word. The content can be picked from the above table.

P 5.3.14 2424 Custom Status Word B13

Select the content of the respective bit of the custom status word. The content can be picked from the above table.

P 5.3.15 2425 Custom Status Word B14

Select the content of the respective bit of the custom status word. The content can be picked from the above table.

P 5.3.16 2426 Custom Status Word B15

Select the content of the respective bit of the custom status word. The content can be picked from the above table.

10. Option Setting (Menu Index 9)

10.1. I/O And Relay Status (Menu Index 9.3)

P 9.3.1 Digital Input Bit Word ***No. 1614***

Shows the bitwise status of each digital input of this board.

	Digital Input Bit Word, ID1641	
	Signal	Description
b0	Digital Input T13	TRUE = Over 15 V DC is applied between X13 T13 and Digital Input GND. FALSE = Less than 5 V DC is applied between X13 T13 and Digital Input GND.
b1	Digital Input T14	TRUE = Over 15 V DC is applied between X13 T13 and Digital Input GND. FALSE = Less than 5 V DC is applied between X13 T13 and Digital Input GND.
b2	Digital Input T15	TRUE = Over 15 V DC is applied between X13 T13 and Digital Input GND. FALSE = Less than 5 V DC is applied between X13 T13 and Digital Input GND.
b3	Digital Input T16	TRUE = Over 15 V DC is applied between X13 T13 and Digital Input GND. FALSE = Less than 5 V DC is applied between X13 T13 and Digital Input GND.
b4	Digital Input T17	TRUE = Over 15 V DC is applied between X13 T13 and Digital Input GND. FALSE = Less than 5 V DC is applied between X13 T13 and Digital Input GND.
b5	Digital Input T18	TRUE = Over 15 V DC is applied between X13 T13 and Digital Input GND. FALSE = Less than 5 V DC is applied between X13 T13 and Digital Input GND.
b6	Reserved	
b7	Reserved	
b8	Reserved	
b9	Reserved	
b10	Reserved	
b11	Reserved	
b12	Thermistor T71	TRUE = More than 4 kΩ is connected between X51 T71 and T72. FALSE = Less than 4 kΩ is connected between X51 T71 and T72.
b13	Reserved	
b14	Reserved	
b15	Reserved	

9.3.2 1615 Digital Output Bit Word

	Digital Output Bit Word, ID1615	
	Signal	Description
b0	Reserved	
b1	Reserved	
b2	Digital Output T21	TRUE = Connection between X13 T21 and I/O GND is active. FALSE = Connection between X13 T21 and I/O GND is active.
b3	Digital Output T22	TRUE = Connection between X13 T21 and I/O GND is active. FALSE = Connection between X13 T21 and I/O GND is active.
b4	Reserved	
b5	Reserved	
b6	Reserved	
b7	Reserved	
b8	Reserved	
b9	Reserved	
b10	Reserved	
b11	Reserved	
b12	Relay T02	TRUE = Connection between X101 T01 (COM) and T02 (NO) is active. FALSE = Connection between X101 T01 (COM) and T03 (NC) is active.
b13	Relay T05	TRUE = Connection between X101 T01 (COM) and T02 (NO) is active. FALSE = Connection between X101 T01 (COM) and T03 (NC) is active.
b14	Relay T08	TRUE = Connection between X101 T01 (COM) and T02 (NO) is active. FALSE = Connection between X101 T01 (COM) and T03 (NC) is active.
b15	Reserved	

P 9.3.3 T31 Analog Output Value No. 1613

Shows the actual value of the terminal.

P 9.3.4 T33 Analog Input Value No. 1611

Shows the actual value of the terminal.

P 9.3.5 T34 Analog Input Value No. 1612

Shows the actual value of the terminal.

10.2. Digital Inputs/Outputs (Menu Index 9.4)

10.2.1. Input T13 (Menu Index 9.4.1)

P 9.4.1.1 2015 T13 Terminal Mode

Select the mode for the terminal.

The following are the selections for the parameter.

0 Inactive

3 Digital input

The terminal is configured as Boolean input (true/false).

P 9.4.1.2 2291 T13 Signal Inversion

Select whether the signal of the terminal is inverted.

The following are the selections for the parameter.

0 Non-Inverted

The signal is not inverted.

1 Inverted

The signal is logically inverted.

P 9.4.1.3 2024 T13 Standard Debounce Filtering Time

Set the standard debounce filtering time for the terminal.

10.2.2. Input T14 (Menu Index 9.4.2)

P 9.4.2.1 2016 T14 Terminal Mode

Select the mode for the terminal. Selection is similar to T13 Terminal Mode.

P 9.4.2.2 2292 T14 Signal Inversion

Select whether the signal of the terminal is inverted. The selection is similar to T13 Signal Inversion.

P 9.4.2.3 T14 Standard Debounce Filtering Time No. 2029

Set the standard debounce filtering time for the terminal.

11. Fieldbus Control in detail

iC7-Hybrid provides a flexible fieldbus interface, which can be mapped according to customer needs.

The following illustrations are only applicable when control is through fieldbus, when bit 10 is true, and fieldbus control place is the active control place. The gray boxes represent the control word bits which are required to transition between different states. The white boxes represent different states of the fieldbus profile, indicating the value of status word bits, which must be in the state shown.

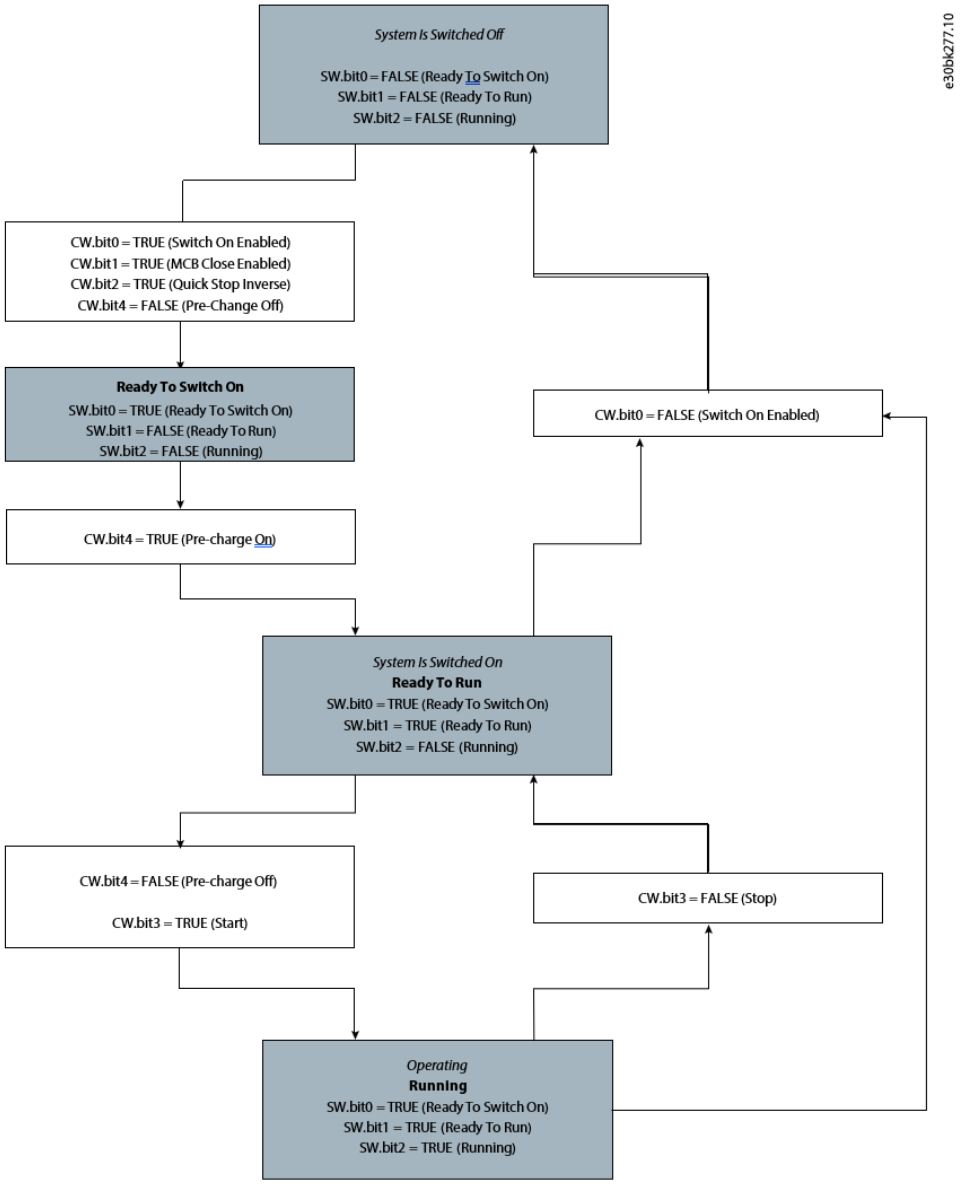

figure 38: The standard startup sequence

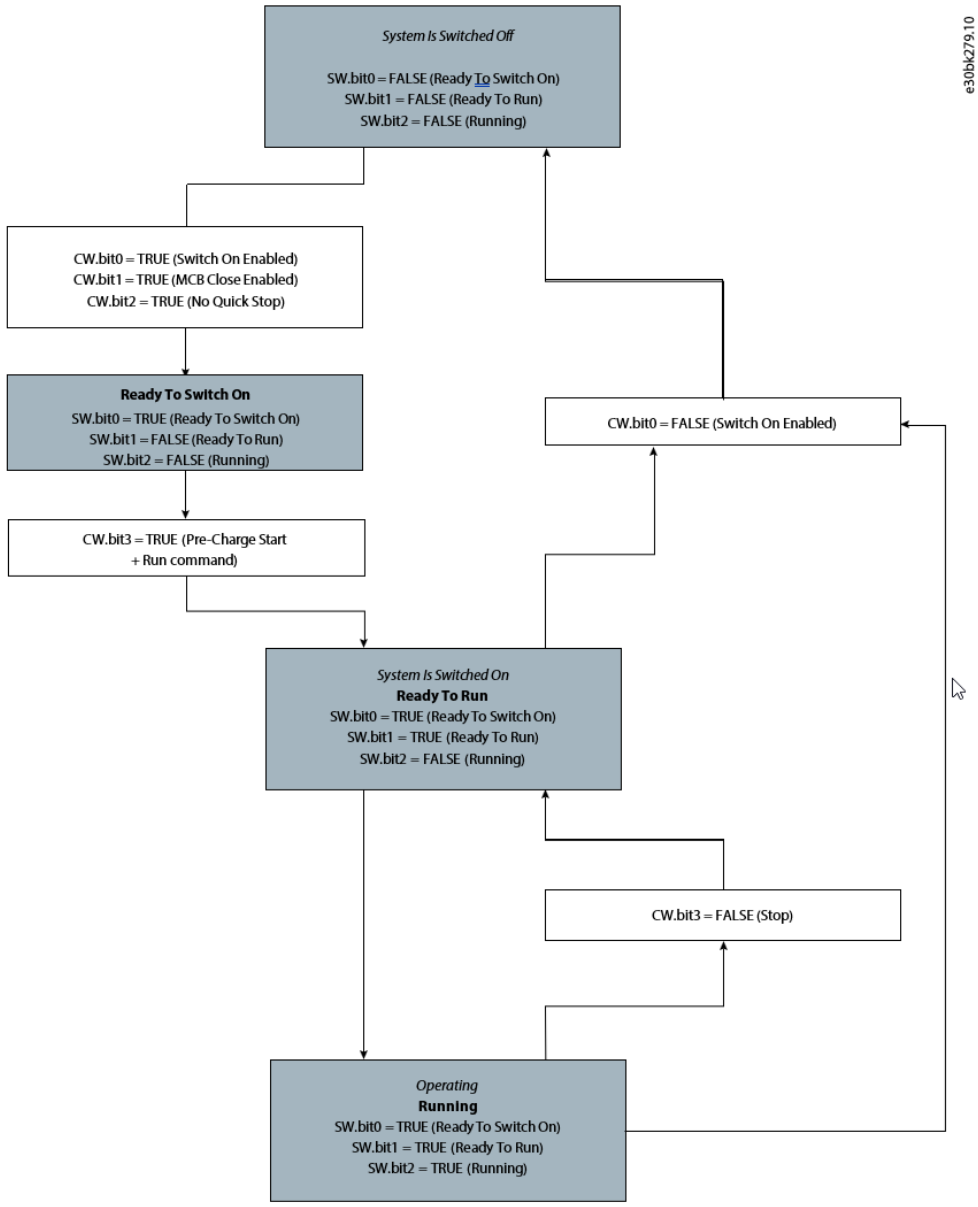

Figure 39: The Start command activates the pre-charging sequence and starts the converter running

Table 15: States and descriptions

State	Description
System is switched off	Prohibits the converter from starting
Ready to switch on	The converter is ready to start charging, with no active faults and no active conditions to inhibit switching on.
System is switched on	The converter is pre-charged and on.
Operating	The converter is running.

11.1. Fieldbus Control word 1335

	Fieldbus Control Word ID1335	
	Signal	Description
b0	Switch On Enabled	Enable operation.
b1	MCB Close Enabled	Enable MCB Close
b2	Quick Stop	False signal will enable quick stop
b3	Start	Start Command
b4	Pre-charge	Pre-charging Command
b5	--	
b6	--	
b7	Warning/Fault Reset	Fault Reset
b8	--	
b9	--	
b10	Data Valid	
b11	Watchdog	
b12	Vendor Specific Bit 1	
b13	Vendor Specific Bit 2	
b14	Vendor Specific Bit 3	
b15	Vendor Specific Bit 4	

11.1.1.1. FB Control Word Bit.0: Switch On Enable

This bit is used with control word bit 3 to enable operation of the unit. When this bit is set to false while running, the unit stops. As shown in the state diagram, to transition from S1 to S2, this bit must be false, otherwise switching on keeps from being inhibited.

0: Pre-charging(*), closing the main circuit breaker(*), and running are prevented or interrupted. If the main circuit breaker is closed, it is opened(*).

1: Pre-charging(*), closing the main circuit breaker(*), and running are not prevented or interrupted.

(*) If controlled by the grid converter unit.

11.1.1.2. FB Control Word Bit.2: MCB Close Enable

This bit is used to move from S1 to S2 and allows MCB to close when charging is completed. If the bit is removed anytime during operation, then the unit comes back to S1.

0: Closing the main circuit breaker is prevented(*) or the main circuit breaker is opened(*), and running is prevented or interrupted.

1: Closing the main circuit breaker is not prevented(*). (*) If controlled by the grid converter unit.

11.1.1.3. FB Control Word Bit.2: Quick Stop

This bit is used to request a quick stop to be executed. When the bit is set to false during operation, the unit stops modulation, and depending on the configura- tion an exception is issued.

0: Activate Quick Stop.

1: Do not activate Quick Stop.

11.1.1.4. FB Control Word Bit.3: Start

A rising edge is required for DC-link pre-charging to start. Depending on parameter number 5114, a rising edge can be required for the unit to start. In that case, if for any reason the unit cannot be started when the rising edge is detected, it will not start until a new ris- ing edge is issued.

0: Stop the unit if it is running, or stop the startup se- quence if it is not completed.

1: Initiate the startup sequence (DC-link pre-charging(*), closing the main circuit breaker(*), and start running), or keep the unit running.

(*) If applicable.

11.1.1.5. FB Control Word Bit.4: Pre-Charge

This bit is only used when the DC-link precharge is controlled by the application.

0: Stop the DC-link pre-charging, if ongoing. 1: Start or continue the DC-link pre-charging.

11.1.1.6. FB Control Word Bit.7: Fault Reset

This bit is used to acknowledge faults in the con- verter. A rising edge (a transition from false to true) on this bit issues an event reset request.

0: No action.

1: Reset active warnings/faults.

11.1.1.7. FB Control Word Bit.10: Data Valid

For Modbus protocol, this bit currently applies to control word only.

For bit 11 ('Watchdog'), the current control word value is used regardless.

The default control word value is 0x5. The default value is used as the initial value when the Data Valid bit is false, and whenever the fieldbus watchdog supervision fault is active (event no. 5161 active, when configured as a fault).

0: Ignore the current incoming process data values, instead use the last processed value when the Data Valid bit was true.

1: Use the current incoming process data values.

11.1.1.8. FB Control Word Bit.11: Watchdog

For bit 11 (‘Watchdog’), the current control word value is used regardless.

The default control word value is 0x5. The default value is used as the initial value when the Data Valid bit is false, and whenever the fieldbus watchdog supervision fault is active (event no. 5161 active, when configured as a fault).

This is the input used for the fieldbus watchdog.

11.1.1.9. FB Control Word Bit.12: Vendor Specific Bit 1

11.1.1.10. FB Control Word Bit.13: Vendor Specific Bit 2

11.1.1.11. FB Control Word Bit.14: Vendor Specific Bit 3

11.1.1.12. FB Control Word Bit.15: Vendor Specific Bit 4

11.2. Fieldbus Status Word 1307

	Fieldbus Status Word ID1307	
	Signal	Description
b0	Ready to Switch On	0: Not ready to switch on 1: Ready to switch on
b1	Ready to Run	0: Converter is not ready to start modulation (Check the ***Grid Control Ready Status*** &***Application Ready Status Word***) 1: Converter is ready to start modulating
b2	Running	0: Converter is not modulating 1: Converter is modulating
b3	Fault	0: No faults are active 1: One or more faults are active
b4	--	Reserved
b5	Quick Stop	0: Quick stop active 1: Quick stop not active
b6	--	Reserved
b7	Warning	0: No warnings active 1: One or more warnings are active
b8	--	Reserved
b9	Control by PLC	0: The active control place is not fieldbus 1: The active control place is fieldbus
b10	--	Reserved
b11	Run Enabled	0: Run enable from the dedicated input signal is missing 1: Run enable from the dedicated input signal is present
b12	--	Reserved
b13	--	Reserved
b14	--	Reserved
b15	Watchdog	Outgoing fieldbus watchdog bit

11.3. Microgrid Control Word 1500

	Microgrid Control Word ID1500	
	Signal	Description
b0	Force DC Voltage Control Mode	0: Do not force the DC Voltage Control (AFE) operating mode. 1: Force the DC Voltage Control (AFE) operating mode.
b1	Force Island Control Mode	0: Do not force the Island operating mode. 1: Force the Island operating mode.
b2	Force Droop Control Mode	0: Do not force the Droop Control operating mode. 1: Force the Droop Control operating mode.
b3	Force Droop Control with Base Load Mode	0: Do not force the Droop Control with Base Load operating mode. 1: Force the Droop Control with Base Load operating mode.
b4	Force PQ Control Mode	0: Do not force the PQ Control operating mode. 1: Force the PQ Control operating mode.
b5	Force DC Current/Power Control Mode	0: Do not force the DC Current/Power operating mode. 1: Force the DC Current/Power operating mode.
b6	Force AC Current/Power Control Mode	0: Do not force the AC Current/Power Control operating mode. 1: Force the AC Current/Power Control operating mode.
b7	Increase Frequency Reference	0: Do not increase the grid frequency reference. 1: Increase the grid frequency reference.
b8	Decrease Frequency Reference	0: Do not decrease the grid frequency reference. 1: Decrease the grid frequency reference.
b9	Frequency Reference Reset	0: Do not reset the grid frequency reference. 1: Reset the grid frequency reference.
b10	Increase Voltage Reference	0: Do not increase the grid voltage reference. 1: Increase the grid voltage reference.
b11	Decrease Voltage Reference	0: Do not decrease the grid voltage reference. 1: Decrease the grid voltage reference.
b12	Voltage Reference Reset	0: Do not reset the grid voltage reference. 1: Reset the grid voltage reference.
b13	Frequency Reference Reset Value Selection	0: Reset the grid frequency reference to grid nominal value. 1: Reset the grid frequency reference to grid actual value.
b14	Voltage Reference Reset Value Selection	0: Reset the grid voltage reference to grid nominal value. 1: Reset the grid voltage reference to grid actual value.
b15	Reserved	

11.4. Grid Control Status Word 6540

	Grid Control Status Word 6540	
	Signal	Description
b0	Bit 0 from Grid Control Mode Selection Status Word	Shows whether converter is operating in Island mode.
b1	Bit 1 from Grid Control Mode Selection Status Word	Shows whether converter is operating in Droop mode.
b2	Bit 2 from Grid Control Mode Selection Status Word	Shows whether converter is operating in Droop with Base Load mode.
b3	Bit 3 from Grid Control Mode Selection Status Word	Shows whether converter is operating in PQ mode.
b4	Bit 4 from Grid Control Mode Selection Status Word	Shows whether converter is operating in DC Voltage Control (AFE) mode.
b5	Bit 1 from Application Specific Status Word 2	Shows the status of a toggled warning.
b6	Bit 2 from Application Specific Status Word 2	Shows the status of a toggled fault.
b7	Bit 10 from Application Specific Status Word 2	Shows whether pre-charging is ready.
b8		
b9		
b10		
b11		
b12		
b13		
b14		
b15		

11.5. Application Specific Status Word 1

	Application Specific Status Word 1 ID6201	
	Signal	Description
b0	Ready to Run	0: The converter is not ready to start modulation. Check 'Grid Control Ready Status Word' and 'Application Ready Status Word'. 1: The converter is ready to start modulation
b1	Run	0: The unit is not running (modulating) 1: The unit is running (modulating)
b2	Info active (static)	Static status signal for info events. 0: One or more info level events are active 1: No info level events active.
b3	Warning (static)	Static status signal for warning events. 0: No warning level events active. 1: One or more warning level events are active.
b4	Fault (static)	Static status signal for fault events. 0: No fault level events active. 1: One or more fault level events are active.
b5	PC control	0: PC (MyDrive® Insight) is not the active control place 1: PC (MyDrive® Insight) is the active control place.
b6	Panel control	0: Panel control is not the active control place 1: Panel control is the active control place.
b7	I/O control	0: I/O control is not the active control place 1: I/O control is the active control place.
b8	Fieldbus control	0: I/O control is not the active control place 1: I/O control is the active control place.
b9	Reserved	
b10	Reserved	
b11	Run enable	0: The Run Enable Input is not active. Start is prohibited. 1: The Run Enable Input is active allowing the converter to start or maintain running.
b12	Start command	0: No start request is active from the active control place. 1: The start request is active from the active control place.
b13	Quick stop	0: No quick stop is active from I/O or fieldbus. 1: The quick stop has been activated from I/O or fieldbus.
b14	Reserved	
b15	Reserved	

11.6. Application Specific Status Word 2

	Application Specific Status Word 2 ID6202	
	Signal	Description
b0	Info active (toggled)	Toggled status signal for info events. This signal will toggle down for 1 second, whenever a new info event is activated while another info event was already active.
b1	Warning active (toggled)	Toggled status signal for warning events. This signal will toggle down for 1 second, whenever a new warning is activated while another warning was already active.
b2	Fault active (toggled)	Toggled status signal for fault events. This signal will toggle down for 1 second, whenever a new fault is activated while another fault was already active.
b3	Ready to Start Pre-Charge	Pre-Charge allowed active is a status signal indicating that the DC-link voltage is below the Pre-Charge Allowed Level (No. 5510) and a new start command or Pre-Charge command can successfully start the Pre-charging. 1: Pre-charging is allowed. 0: No Pre-charging is allowed.
b4	Ready to Close MCB	Ready to Close MCB is a status signal indicating that the DC-link voltage has reached above the Pre-Charge Ready Level (No. 6566) and all the interlocks to close the breaker are active. 1: MCB closing is allowed. 0: MCB closing is not allowed.
b5	Pre-Charge Detected	Pre-Charged Detected is a status signal indicating that the DC-link voltage is increasing from 0% towards Pre-Charge Ready Level. 1: Pre-Charge is detected. 0: Pre-Charge is not detected.
b6	Pre-Charge Output	Pre-Charge Output is a status signal indicating that the Pre-Charge relay output is active. 1: Pre-Charge relay output is active. 0: Pre-Charge relay output is not active.
b7	MCB Close Command	MCB Close Command is a status signal indicating that the MCB closing relay output is active. 1: MCB closing relay output is active. 0: MCB closing relay output is not active.
b8	MCB Feedback	MCB Feedback is a status signal indicating that the MCB is closed if configured and controlled by the application. 1: MCB is closed. 0: MCB is open.
b9	Switch Off Request	Switch Off Request is a status signal indicating that the Switch On Enable Input (No. 4728) is false or the Switch On Enable bit (B0) from the fieldbus is false. 1: Switch off requests from I/O or Fieldbus is active or stop with MCB open requested from control panel or MyDrive Insight. 0: No switch off request from I/O or Fieldbus is active
b10	Pre-Charge Ready	Pre-Charge Ready is a status signal indicating that DC-link voltage is above the Pre-Charge Ready Level (No. 6566). 1: Pre-charging is ready. 0: Pre-charging is not ready.
b11	MCB Close Enabled	MCB Close Enabled is a status signal indicating that the MCB closing is enabled from both MCB Close Enable Input (6557) and MCB Close Enable bit from the fieldbus. 1: MCB closing is enabled. 0: MCB closing is not enabled.
b12	Ready to Switch On	Ready to Switch On is a status signal indicating that all the application interlocks needed to start the converter are active. 1: Converter is ready to switch on.

		0: Converter is not ready to switch on. One of the following interlocks are missing: - Switch On Enable (either from I/O or fieldbus). - MCB close enable (either from I/O or fieldbus). - No Quick stop is active. - No fault is active.
b13	Filter Energized	Filter Energized is a status signal indicating that the LCL-filter is energized. 1: Filter is energized. 0: Filter is not energized.
b14	Reserved	
b15	Reserved	

11.7. Fault Status Word 1

	Fault Status Word 1 ID6203	
	Signal	Description
b0	Over current	Rectifier overcurrent, DC-link capacitor overcurrent, output overcurrent or output short circuit has occurred.
b1	DC-Link Over voltage	DC-link voltage is above normal operating range.
b2	DC-Link Under voltage	DC-link voltage is below normal operating range.
b3	Reserved	-
b4	Unit under temperature	IGBT, rectifier heatsink, or power unit temperature is below normal operating range.
b5	Reserved	-
b6	Reserved	-
b7	Reserved	-
b8	Earth Fault	High-impedance earth leakage current on the inverter terminals.
b9	Reserved	-
b10	Fieldbus issue	Fieldbus process data timeout, watchdog, loss of fieldbus I/O or connection has occurred.
b11	HMI control lost	While in control of the converter, Control Panel or PC tool connection has been lost.
b12	Reserved	-
b13	Thermistor Fault	One or more thermistor protection functions is active.
b14	Auxiliary device	One or more aux-bus connected power component temperatures is above normal operating range.
b15	Reserved	-

11.8. Fault Status Word 2

	Fault Status Word 2 ID6204	
	Signal	Description
b0	Analog Input Live Zero	One of the analog inputs live zero fault is active. 0: No live zero fault is active 1: One or more of the analog inputs live zero faults are active
b1	Pre charge Failed	Pre-charging has failed. 0: No fault corresponding to the Pre-charging failure is active 1: Pre-charging failure fault is active
b2	MCB Feedback Fault	MCB feedback fault is active because of the feedback missing. 0: No MCB feedback fault is active 1: MCB feedback fault is active
b3	Quick Stop Active	0: No quick stop fault is active 1: One or more of the quick stop faults are active
b4	Thermistor Over Temperature	0: No thermistor over temperature faults is active 1: One or more of the thermistors over temperature faults are active
b5	MCB Trip	0: No MCB trip fault is active 1: MCB trip input from breaker has triggered the MCB trip fault.
b6	External Fault	0: None of the External Event faults are active 1: One or more of the External Event faults are active
b7	Cooling Supervision Fault	0: No cooling supervision faults is active 1: Cooling supervision fault is active
b8	Fieldbus Watchdog	0: Fieldbus watchdog fault is not active. 1: Fieldbus watchdog fault is active.
b9	Line Synchronization Fault	0: Line synchronization fault is not active 1: Line synchronization fault active
b10	Short Term Current Injection	0: Short term current injection fault is not active. 1: Short term current injection fault is active
b11	DC Power Breaker Timeout	0: None of the listed faults is active 1: One or more of the listed faults are active Fault list: event no. 5379
b12	Reserved	
b13	Reserved	
b14	Reserved	
b15	Reserved	

11.9. Warning Status Word 1

	Warning Status Word 1 ID6205	
	Signal	Description
b0	Over current	Rectifier overcurrent, DC-link capacitor overcurrent, output overcurrent or output short circuit has occurred.
b1	DC-Link Over voltage	DC-link voltage is above normal operating range.
b2	DC-Link Under voltage	DC-link voltage is below normal operating range.
b3	Reserved	-
b4	Unit under temperature	IGBT, rectifier heatsink, or power unit temperature is below normal operating range.
b5	Reserved	-
b6	Reserved	-
b7	Reserved	-
b8	Earth Warning	High-impedance earth leakage current on the inverter terminals.
b9	Reserved	-
b10	Fieldbus issue	Fieldbus process data timeout, watchdog, loss of fieldbus I/O or connection has occurred.
b11	HMI control lost	While in control of the converter, Control Panel or PC tool connection has been lost.
b12	Reserved	-
b13	Thermistor Warning	One or more thermistor protection functions is active.
b14	Auxiliary device	One or more aux-bus connected power component temperatures is above normal operating range.
b15	Reserved	-

11.10. Warning Word 2

	Warning Status Word 2 ID6206	
	Signal	Description
b0	Analog Input Live Zero	One of the analog inputs live zero warning is active. 0: No live zero warning is active 1: One or more of the analog inputs live zero faults are active
b1	Reserved	-
b2	Reserved	-
b3	Quick Stop Active	0: No quick stop warning is active 1: One or more of the quick stop warnings are active
b4	Thermistor Over Temperature	0: No thermistor over temperature Warning is active 1: One or more of the thermistors over temperature warnings are active
b5	Reserved	-
b6	External Warning	0: None of the External Event warnings are active 1: One or more of the External Event warnings are active
b7	Cooling Supervision Warning	0: No cooling supervision warning is active 1: Cooling supervision warning is active
b8	Fieldbus Watchdog	0: Fieldbus watchdog warning is not active. 1: Fieldbus watchdog warnings is active.
b9	Reserved	-
b10	Short Term Current Injection	0: Short term current injection warning is not active. 1: Short term current injection warning is active
b11	AC Surge Protection Active	0: None of the listed warnings is active 1: One or more of the listed warnings are active Warning list: event no. 21569
b12	DC Surge Protection Active	0: None of the listed warnings is active 1: One or more of the listed warnings are active Warning list: event no. 21568
b13	Reserved	
b14	Reserved	
b15	Reserved	

11.11. Grid Ctrl. Status Word

	Grid Control Status Word ID6540	
	Signal	Description
b0	Converter Control Ready	0: Grid Converter control is not ready. See Grid Control Ready Status Word (No. 5096) 1: Grid Converter control is ready to modulate.
b1	Running	0: Grid Converter is not running. 1: Grid Converter is running.
b2	Reserved	-
b3	Fault Active	0: No fault is active 1: One or more of the quick stop warnings are active
b4	Reserved	-
b5	Reserved	-
b6	DC-link Charged	0: DC-link is not charged. 1: DC-link is charged.
b7	LCL-Filter Energization Ready	0: Filter is not energized. 1: Filter is energized.
b8	Reserved	-
b9	Reserved	-
b10	Reserved	-
b11	Reserved	-
b12	Reserved	-
b13	Reserved	-
b14	Reserved	-
b15	Reserved	-

11.12. Grid Ctrl. Ready Status Word

	Grid Control Ready Status Word ID5096	
	Signal	Description
b0	Run Enabled	0: Run Enable is missing 1: Run Enable is active
b1	Fault Active	0: One or multiple faults are active 1: No fault is active
b2	Pre-Charge Done	0: Pre-charging is not completed 1: Pre-charging is completed
b3	DC-link voltage within operating range	0: DC-link voltage is not within the under & over-voltage fault limits 1: DC-link voltage is within the under & over-voltage fault limits
b4	Power unit ready	0: Power unit is not ready 1: Power unit is ready
b5	Successful phase sync.	0: Error in grid voltage phase locked loop 1: No error in grid voltage phase locked loop
b6	Frequency supervision	0: Grid frequency is not within the instantaneous trip limits 1: Grid frequency is within the instantaneous trip limits
b7	Grid voltage supervision	0: Grid voltage is not within the instantaneous trip limits 1: Grid voltage is within the instantaneous trip limits
b8	Correct voltage measurement option wiring	0: Phase order of the converter terminal voltage and voltage measurement option is different 1: Phase order of the converter terminal voltage and voltage measurement option is same
b9	Valid LCL filter values	0: LCL filter data is not correct 1: LCL filter data is correct
b10	Valid Configuration	0: DC-link under & over-voltage limits are very close to each other. 1: DC-link under & over-voltage limits are wide enough for operation.
b11	Reserved	-
b12	Reserved	-
b13	EV measurement is ready	0: External voltage measurement is not ready for closed-loop control 1: External voltage measurement is ready for closed-loop control
b14	Reserved	-
b15	Reserved	-

11.13. Application Ready Status Word

	Application Ready Status Word ID6525	
	Signal	Description
b0	Switch On Enabled	1: Switch on enable from I/O & fieldbus is active. 0: Switch on enable is missing or stop with MCB open requested from control panel or MyDrive Insight
b1	MCB Close Enabled	1: MCB close enable present 0: MCB close enable missing *Not used in DC/DC Converter Application.*
b2	MCB Ready	1: MCB closed or anyway not preventing modulation 0: Modulation prevented due the MCB not being closed *Not used in DC/DC Converter Application.*
b3	Quick Stop Inverse	1: Quick Stop not active 0: Quick Stop active
b4	Reserved	-
b5	Reserved	-
b6	Reserved	-
b7	Reserved	-
b8	Reserved	-
b9	Reserved	-
b10	Reserved	-
b11	Reserved	-
b12	Reserved	-
b13	Reserved	-
b14	Reserved	-
b15	Reserved	-

11.14. Limit Control Status Word

	Limit Control Status Word ID9077	
	Signal	Description
b0	Pos. Active Current Limit	0: Positive Active Current Limiter not active (not limiting) 1: Positive Active Current Limiter active (limiting)
b1	Neg. Active Current Limit	0: Negative Active Current Limiter not active (not limiting) 1: Negative Active Current Limiter active (limiting)
b2	Short Term Current Injection Limit	0: Short Term Current Injection Limiter not active (not limitng) 1: Short Term Current Injection Limiter active (limiting)
b3	Reserved	
b4	DC-link Overvoltage control	0: DC-link overvoltage controller is not active (not regualting) 1: DC-link overvoltage controller is active (regualting)
b5	DC-link Undervoltage control	0: DC-link undervoltage controller is not active (not regualting) 1: DC-link undervoltage controller is active (regualting)
b6	Pos. Active Power Limit	0: Pos. Active Power Limiter is not active (not limiting) 1: Pos. Active Power Limiter is active (limiting)
b7	Neg. Active Power Limit	0: Neg. Active Power Limiter is not active (not limiting) 1: Neg. Active Power Limiter is active (limiting)
b8	Pos. Reactive Current Limit	0: Pos. Reactive Current Limiter is not active (not limiting) 1: Pos. Reactive Current Limiter is active (limiting)
b9	Neg. Reactive Current Limit	0: Neg. Reactive Current Limiter is not active (not limiting) 1: Neg. Reactive Current Limiter is active (limiting)
b10	Reserved	
b11	Reserved	
b12	Reserved	
b13	Reserved	
b14	Reserved	
b15	Reserved	

11.15. Ext. Grid Status Word

	Ext. Grid Status Word ID6594	
	Signal	Description
b0	Grid Detected	1: Grid voltage feedback is available 0: No Grid voltage feedback is available
b1	Phase Locked Loop operation (PLL)	1: Phase locked loop is running
b2	Synchronization in progress	1: Synchronization is ongoing 0: No Synchronization is ongoing
b3	Voltage Synched	1: Voltage synchronization is ready
b4	Angle Synched	1: Phase angles synchronization is ready
b5	Phase Locked Loop Synched (PLL)	1: Phase locked loop is synched
b6	Frequency in range	1: Grid frequency is within the instant fault limits 0: Grid frequency is outside the instant fault limits
b7	Voltage in range	1: Grid voltage is within the instant fault limits 0: Grid voltage is outside the instant fault limits
b8	Reserved	
b9	Reserved	
b10	Reserved	
b11	Reserved	
b12	Reserved	
b13	Reserved	
b14	Reserved	
b15	Reserved	

11.16. General Status Word 01

	General Status Word 01 ID6238	
	Signal	Description
b0		
b1	Control Ready	
b2	Control Run	
b3	Control Fault	
b4	Start Active	
b5	Quick Stop Active	
b6	Run Enable	
b7	Control Warning	
b8	Pre Charge Ready	
b9	MCB Close Control	
b10	MCB Feedback	
b11		
b12	Run Request	
b13		
b14		
b15		
b16		
b17		
b18		
b19		
b20		
b21		
b22		
b23		
b24		
b25		
b26		
b27		
b28		
b29		
b30		
b31		

11.17. Standby Mode Status Word

Shows the status of the Standby Mode.

	Standby Mode Status Word ID333	
	Signal	Description
b0	Standby Mode Enabled.	
b1	Standby Mode Ready.	
b2	Modulation Command.	
b3	Standby Mode Warning.	
b4	Precharge Command.	
b5	Reserved	
b6	Reserved	
b7	Reserved	
b8	Reserved	
b9	Reserved	
b10	Reserved	
b11	Reserved	
b12	Reserved	
b13	Reserved	
b14	Reserved	
b15	Reserved	

11.18. DC Contactor Status Word

Shows the status of DC power contactors.

	DC Contactor Status Word ID162	
	Signal	Description
b0	Dcp Closing Port Set	
b1	Dcp Feedback Port Set	
b2	Dcp Close Command	
b3	Dcp Closed Feedback	
b4	Dcp Closing Fault	
b5	Dcp Closing Port Set	
b6	Reserved	
b7	Reserved	
b8	Reserved	
b9	Dcn Closing Port Set	
b10	Dcn Feedback Port Set	
b11	Dcn Close Command	
b12	Dcn Closed Feedback	
b13	Dcn Closing Fault.	
b14	Reserved	
b15	Reserved	

11.19. Grid Ctrl. Mode Selection Status Word

	Grid Control Mode Selection Status Word ID9078	
	Signal	Description
b0	Island	1: Island Mode is active 0: Island Mode is not active
b1	Droop	1: Droop Mode is active 0: Droop Mode is not active
b2	Droop with base load	1: Droop with based load Mode is active 0: Droop with base load Mode is not active
b3	PQ Control	1: PQ Control Mode is active 0: PQ Control Mode is not active
b4	DC Link Voltage (AFE)	1: DC-link Voltage Control Mode is active 0: DC-link Voltage Control Mode is active
b5	DC Link Current/Power	1: DC-link Current/Power Control Mode is active 0: DC-link Current/Power Control Mode is active
b6	Active Current/Power	1: Active Current/Power Control Mode is active 0: Active Current/Power Control Mode is active
b7	Reserved	
b8	Reserved	
b9	Reserved	
b10	Reserved	
b11	Reserved	
b12	Reserved	
b13	Reserved	
b14	Reserved	
b15	Reserved	

11.20. Grid Supervision Status Word

Shows the grid supervision status for Over/Undervoltage & High/Low frequency supervision.

When Grid Code functions are active all below warning and faults are disabled.

	Grid Supervision Status Word ID9054	
	Signal	Description
b0	Freq. Below Low Delayed Trip Lim.	1: Grid frequency is below the lower delayed fault limit
b1	Freq. Below Low Warn. Lim.	1: Grid frequency is below the lower warning limit
b2	Freq. Above High Warn. Lim.	1: Grid frequency is above the higher warning limit
b3	Freq. Above High Delayed Trip Lim.	1: Grid frequency is above the higher delayed fault limit
b4	Freq. Above High Inst. Trip Lim.	1: Grid frequency is above the Instant higher fault limit
b5	Freq. Below Low Inst. Trip Lim.	1: Grid frequency is below the Instant lower fault limit
b6	Volt. Below Low Delayed Trip Lim.	1: Grid voltage is below the lower delayed fault limit
b7	Volt. Below Low Warning Lim.	1: Grid voltage is below the lower warning limit
b8	Volt. Above High Warning Lim.	1: Grid voltage is above the higher warning limit
b9	Volt. Above High Delayed Trip Lim.	1: Grid voltage is above the higher delayed fault limit
b10	Volt. Above High Inst. Trip Lim.	1: Grid voltage is above the Instant higher fault limit
b11	Volt. Below Low Inst. Trip Lim.	1: Grid voltage is below the Instant lower fault limit
b12	Reserved	
b13	Reserved	
b14	Reserved	
b15	Reserved	

11.21. Grid Code State

	Grid Code State ID5572	
	Signal	Description
b0	Enable Grid Code	Grid Code functions are active
b1	Control Run	Drive is modulating
b2	Grid Code Stop Request	Grid Code prevents starting
b3	Grid Code Trip Request	Grid Code functions request disconnection.
b4	LineFreqHighTrip1_Act	Frequency above trip limit 1
b5	LineFreqHighTrip2_Act	Frequency above trip limit 2
b6	LineFreqHighTrip3_Act	Frequency above trip limit 3
b7	LineFreqLowTrip1_Act	Frequency below trip limit 1
b8	LineFreqLowTrip2_Act	Frequency below trip limit 2
b9	LineFreqLowTrip3_Act	Frequency below trip limit 3
b10	Line Frequency OK	Frequency inside reconnection limits
b11	Line Voltage OK	Voltage inside reconnection limits
b12	LineVoltHighTrip1_Act	Voltage above trip limit 1
b13	LineVoltHighTrip2_Act	Voltage above trip limit 2
b14	LineVoltHighTrip3_Act	Voltage above trip limit 3
b15	LineVoltLowTrip1_Act	Voltage below trip limit 1
b16	LineVoltLowTrip2_Act	Voltage below trip limit 2
b17	LineVoltLowTrip3_Act	Voltage below trip limit 3
b18	LineVoltLowTrip4_Act	Voltage below trip limit 4
b19	GC_DynSuppReactiveFeedAct	Dynamic support is feeding reactive
b20	HFPR_ForcePowerRefMode	High Freq Power Ref active
b21	LFPR_ForcePowerRefMode	Low Freq Power Ref active
b22	QU_ReactiveReference	Q(U) Reactive power active
b23	Reconnection	Reconnection sequence active
b24	Restricted grid support active	Active and reactive are forced zero
b25		
b26		
b27		
b28		
b29		
b30		
b31		

12. Connectivity

This section provides information about configuring and monitoring all types of communication interfaces as well as the communication and fieldbus protocols available. Following are the available interfaces:

- Communication interface X0 (service port).
- Communication interface X1/X2 (fieldbus ports).
- Attached communication options.

Note that the availability of different fieldbus protocols depends on the product.

Integrated Communication

Communication interfaces

Host Settings

P10.1.1.1.1 Fully Qualified Domain Name No. 7036

Fully Qualified Domain Name. Consists of a host name label and at least 1 higher-level domain separated by the symbol "." with up to 240 characters in total. Each label contains up to 63 characters and starts with a lowercase letter and ends with alphanumeric lowercase character and have as interior characters only alphanumeric lowercase characters and '-'.

Ethernet Interface X0

IPv4 Settings

This is a menu screen for enabling IP configuration of the X0 interface. Check the available settings via the control panel or MyDrive® Insight.

Note: To ensure that outgoing IP packets are routed correctly, configure the IP address of the X1/X2 interfaces to a different subnet than the IP address of the X0 interface.

IPv4 Status

This is a menu screen containing information about the IP configuration of the X0 interface. Check the available information via the control panel or MyDrive® Insight.

Ethernet Interface X1/X2

IPv4 Settings

This is a menu screen for enabling IP configuration of the X1/2 interface. Check the available settings via the control panel or MyDrive® Insight.

Note: To ensure that outgoing IP packets are routed correctly, configure the IP address of the X1/X2 interfaces to a different subnet than the IP address of the X0 interface.

IPv4 Status

This is a menu screen containing information about the IP configuration of the X1/X2 interface. Check the available information via the control panel or MyDrive® Insight.

Ethernet port X0

X0 Settings

P10.1.1.4.1.1 Link configuration X0 No. 7047

Select the configuration of the Ethernet link parameters.

Number	Name
0	Auto negotiation

Number	Name
1	10 Mbps full duplex
2	10 Mbps half duplex
3	100 Mbps full duplex
4	100 Mbps half duplex

Ethernet port X1

X1 Settings

P10.1.1.5.1.1 Link Configuration X1 No. 7048

Select the configuration of the Ethernet link parameters.

Number	Name
0	Auto negotiation
1	10 Mbps full duplex
2	10 Mbps half duplex
3	100 Mbps full duplex
4	100 Mbps half duplex

Ethernet port X2

X2 Settings

P10.1.1.6.1.1 Link Configuration X2 No. 7049

Select the configuration of the Ethernet link parameters.

Number	Name
0	Auto negotiation
1	10 Mbps full duplex
2	10 Mbps half duplex
3	100 Mbps full duplex
4	100 Mbps half duplex

Port Mirroring

This is a menu screen for enabling and disabling the port-mirroring function for network troubleshooting with a network analyzer tool. Check the available configurations via the control panel or MyDrive® Insight.

Protocols

PROFINET®

Status

PROFINET® Report

This is the PROFINET® report screen showing active PROFINET® connection and configuration information. Check the available information via the control panel or MyDrive® Insight.

Configuration

P10.1.2.1.2.1 Name of Station No. 7080

Set the name of the station. The PROFINET® device is identified by its name of station. Each name must be unique in the network.

Diagnosis

P10.1.2.1.3.1 Diagnostic Fault No. 7081

Enables diagnostic faults. When disabled the device will not send any PROFINET® diagnosis message with severity "Fault" when a fault is present on device.

Number	Name	Description
0	Disabled	Fault diagnosis messages are not sent.
1	Enabled	Fault diagnosis messages are sent.

P10.1.2.1.3.2 Diagnostic Warning No. 7083

Enables diagnostic warning. When disabled the device will not send any PROFINET® diagnosis message with severity "Maintenance required" when a warning is present on device.

Number	Name	Description
0	Disabled	Warning diagnosis messages are not sent.
1	Enabled	Warning diagnosis messages are sent.

Modbus® TCP

Configuration

P10.1.2.2.1.1 Persistent Storage No. 7061

Select if persistent storage is active for Modbus® writes.

Number	Name	Description
0	Disabled	When writing to configuration parameters via a Modbus® protocol, the latest written value is not stored to memory. If the converter is rebooted the latest written value is lost.
1	Enabled	When writing to configuration parameters via a Modbus® protocol, the latest written value is stored to memory. If the converter is rebooted the latest written value is retained.

P10.1.2.2.1.2 Byte Order No. 7062

Byte Order refers to how data is stored in memory. In Modbus communication, this determines the sequence in which bytes are sent or received. Select the byte order as described in the following table.

Number	Name	Description
0	Big Endian	The most significant byte (MSB) is stored or transmitted first, thus decreasing byte order. Suppose the system has an 8-bit register, for holding the value 0xAB starting at address 1000. Then at location1000: 0xA (MSB) will be stored and at location1001: 0xB (LSB) will be stored.
1	Little Endian	The least significant byte (LSB) is stored or transmitted first, thus increasing byte order. Suppose the system has an 8-bit register, for holding the value 0xAB starting at address 1000. Then at location1000: 0xB (LSB) will be stored and at location1001: 0xA (MSB) will be stored.

P10.1.2.2.1.3 Word Order **No. 7063**
Select the word order.

Number	Name	Description
0	Big Endian	The most significant byte (MSB) is stored or transmitted first, thus decreasing byte order. Suppose the system has an 8-bit register, for holding the value 0xABCD starting at address 1000. Then at location1000: 0xAB (MSB) will be stored and at location1001: 0xCD (LSB) will be stored.
1	Little Endian	The least significant byte (LSB) is stored or transmitted first, thus increasing byte order. Suppose the system has an 8-bit register, for holding the value 0xABCD starting at address 1000. Then at location1000: 0xCD (LSB) will be stored and at location1001: 0xAB (MSB) will be stored.

EtherCAT

Configuration

P10.1.2.3.1.1 Device ID **No. 7084**

The EtherCAT Explicit Device Identification is an optional feature for explictly identifying an EtherCAT slave. If set, the value must be unique within the network configuration.

General Settings

P10.1.2.3.1.2 SNMP Agent **No. 5907**
This parameter Activates the local SNMP Agent.

Number	Name	Description
0	Disabled	Fault diagnosis messages are not sent.
1	Enabled	Fault diagnosis messages are sent.

13. Protection Features

13.1. DC-link overvoltage protection

The converter stops modulation when the overvoltage level is reached. The default response for this protection is fault, and cannot be changed.

13.2. Overtemperature protection

The converter stops modulation when the overtemperature level for the converter heat sink is reached. This protection also opens the main circuit breaker. The default response for this protection is fault, and cannot be changed.

13.3. Overcurrent protection

The converter stops modulation when the overcurrent level is reached. This protection also opens the main circuit breaker. The default response for this protection is fault, and cannot be changed.

13.4. Cooling supervision

Cooling supervision is used for monitoring the status of the external liquid cooling system.

Cooling supervision can be configured with the digital input 5.2.1.1 Cooling Monitor Input. The response can be configured both as a warning and a fault. Different responses can be configured based on the run/stop state of the converter with 5.2.1.3 Cooling Monitor Response. A delay in seconds can be added for the triggering of the protection with 5.2.1.2 Cooling Monitor Delay.

13.5. Filter temperature protection

LCL Filter temperatures are monitored using AuxBus nodes and the converter can issue a warning or a fault based on the filter temperature measurements. This protection cannot be configured by the user.

13.6. Missing phase

The converter stops modulation when it detects one of the grid phases is missing.

13.7. Limit Supervision

Limit Supervision monitors values that need supervising. Either DC Link Current, DC Link Power, Active Current, or Active Power can be selected as the value to be supervised with parameter 5.30.1 Limit Supervision 1 Sel. Limit Supervision can also be configured to monitor the exceeding of 5.30.3 Limit Supervision 1 Threshold or monitoring limit drop. The configuring is done with parameter 5.30.2 Limit Supervision 1 Type.

Limit Supervision is enabled with parameter 5.30.5 Limit Supervision 1 Enable. The parameter has the following selections:

- Disabled
- Enabled
- Active when the Current Lim. Ramp event response is active
- Enabled in run state

If the supervised value becomes lower or higher than the 5.30.3 Limit Supervision 1 Threshold, it triggers the Limit Supervision fault, and the grid converter stops modulating if it is in run state. This protection also opens the main circuit breaker and brings the DC-link voltage down.

Once the fault limit has been reached, the fault remains active as long as the supervised value is lower than 5.30.3 Limit Supervision 1 Threshold when monitoring a low limit or higher than 5.30.3 Limit Supervision 1 Threshold when monitoring a high limit.

13.8. Quick Stop

The purpose of quick stop is to stop the converter, regardless of the operation condition. A common use case for quick stop is to allow the converter to make a controlled stop when the Emergency Stop button is pressed. Usually, there are a few seconds to make a

controlled stop before emergency stop forces all breakers to open and makes the system electrically safe. In Grid Converter, modulation is stopped immediately and the MCB is opened.

The quick stop function can be initiated from the fieldbus or using digital inputs.

- Fieldbus Control Word B2
- 5.7.3.1 Quick Stop Input (parameter ID 212)
- 5.7.3.6 Quick Stop Input 2 (parameter ID 5104)

13.9. Measured Temperature Protection

The measured temperature protection feature offers 10 individual protection channels for monitoring temperatures of external devices, like filters or transformer windings, through temperature probes. Each protection channel can be configured to trigger an individual event, which can be used to identify the source of the high temperature measurement.

Each protection measurement has two configurable stages. Stage 1 triggers a warning, while stage 2 can trigger a more severe event, such as a fault, which stops the drive. The activation levels of both stages and the response of stage 2 can be configured. If two stages are unnecessary, the levels of both stages can be configured to be the same.

14. Problem Solving

When trying to solve an issue or when contacting technical support:

- Give a general description of the system. Single Line Diagram is marvelous to have.
- Give a description of the problem, spare no details. Give values for the problem.
- What was expected to happen.
- Take a fresh parameter file from the drive, if possible while the problem is active.
- Always send the parameter file or service info from the drive, mention if the file is old.
- Take a datalogger file from the drive, especially from the fault situation.
- Take a monitoring window recording. Increase the interval from default settings
- One signal may show the problem, having several signals may solve the problem.
- If not sure what signal to monitor, take the one recommended in the problem solving chapter.
- Name the files so that it is easy to see what ones are from the same situation. For example, use a running number. (001_...)
- Give descriptions for the files, it is usually not obvious for support.
- Remember, support knows only what you say or send. Obvious to you is a mystery for us.

Supporting documents and tools:

- MyDrive Insight application guide document
- MyDrive Insight commissioning tool download

15. Faults and Warnings

4097 Inverter Overload

Thermal overload is detected in the inverter of the drive. Reduce the output load.

4099 Ambient Temp. High

The ambient temperature is too high. Check the temperature and cooling conditions.

4102 Ambient Temp. Low

The drive is operated at a too low ambient temperature. Check the ambient temperature. Increase the ambient temperature or consider an external heater to increase the temperature around the drive.

4103 Inverter Temp. Limit

The temperature of the inverter heat sink is at the upper limit of the normal temperature range. Check cooling and heat sink conditions. Reduce the output current or ambient

4104 Inverter Temp. High 1

The temperature of the inverter heat sink has exceeded the normal temperature level. Check cooling and heat sink conditions.

4105 Inverter Temp. High 2

The temperature of the inverter heat sink has reached a critical level. Check cooling and heat sink conditions. Reduce the output current to avoid a protected fault.

4106 Brake Chopper Temp. Low

The temperature of the brake chopper heat sink is too low. Check the ambient temperature. Increase the ambient temperature or consider an external heater to increase the temperature around the drive.

4107 Brake Chopper Temp. Limit

The temperature of the brake chopper heat sink is at the upper limit of the normal temperature range. Check cooling and heat sink conditions. Reduce the generated regenerative power.

4108 Brake Chopper Temp. High 1

The temperature of the brake chopper heat sink has exceeded the normal temperature range. Check cooling and heat sink conditions. Reduce the generated regenerative power.

4109 Brake Chopper Temp. High 2

The temperature of the brake chopper heat sink has reached a critical level. Check cooling and heat sink conditions. Reduce the generated regenerative power.

4110 IGBT Temp. High

An inverter IGBT overtemperature has been detected. Reduce the ambient temperature, the output current and/or the switching frequency. Check the cooling and the condition of the heat sink.

4112 Rectifier Temp. Low

The temperature of the rectifier heat sink is too low. Check the ambient temperature. Increase the ambient temperature or consider an external heater to increase the temperature around the drive.

4113 Rectifier Temp. Limit

The temperature of the rectifier heat sink is at the upper limit of the normal temperature range. Check cooling and heat sink conditions. Reduce the output power (torque, speed) or the ambient temperature.

4114 Rectifier Temp. High 1

The temperature of the rectifier heat sink has exceeded the normal temperature range.

4115 Rectifier Temp. High 2

The temperature of the rectifier heat sink has reached a critical level. Check cooling and heat sink conditions. Reduce the output power (torque, speed) or the ambient temperature.

4116 Power Unit Temp. Low

The internal air temperature of the drive is below the normal operating range. The drive is operated at a too low ambient temperature. Consider an external heater to avoid this warning or fault.

4117 Power Unit Temp. Limit

The internal air temperature of the drive is at the upper limit of the normal temperature range. Check cooling and heat sink conditions. Reduce the output power (torque, speed) or the ambient temperature.

4118 Power Unit Temp. High 1

The internal air temperature of the drive has exceeded its normal temperature range.

4119 Power Unit Temp. High 2

The internal air temperature of the drive has reached a critical value. Check cooling

4120 Control Board Temp. Low

The temperature of the control board is below the normal temperature range. The drive is operated at a too low ambient temperature. Check the ambient temperature. Increase the ambient temperature or consider an external heater to increase the temperature at the drive.

4121 Control Board Temp. Limit

The temperature of the control board is at the upper limit of the normal temperature range. Check cooling conditions and load of the control board. Reduce the load on the control board or the ambient temperature.

4122 Control Board Temp. High 1

The temperature of the control board has exceeded its normal temperature range. Check cooling conditions and load of the control board. Reduce the load on the control board or the ambient temperature.

4123 Control Board Temp. High 2

The temperature of the control board has reached a critical level. Check cooling conditions and load of the control board. Reduce the load on the control board or the ambient temperature.

4124 Break Chopper Temperature Imbalance

There is a temperature imbalance between 1 or more brake chopper IGBT's.

4125 IGBT Temp. High

An inverter IGBT temperature has reached a critical value. Reduce the drive's output current if possible, to avoid a protected fault.

4126 IGBT Temperature Imbalance

There is a temperature imbalance between 1 or more IGBT's.

4127 IGBT Temperature Imbalance

An excessive thermal imbalance between the IGBT modules has been detected. Check the condition of the IGBT modules, their connections, the cooling, and the driver boards.

4128 Control Fan Failure

The control board cooling fan is not running at the commanded speed.

4129 Main Fan Failure

The main cooling fan is not following its reference speed. Check the fan's wiring and whether it is blocked or polluted. Replace the fan if necessary.

4130 Internal Fan Failure

The internal fan is running below its reference speed. Check the fan's wiring and whether it is blocked or polluted. Replace the fan if necessary.

4131 Temperature Imbalance Brake IGBT

There is a temperature imbalance between 1 or more brake chopper IGBT's.

4132 IGBT temperature delta

There is a temperature imbalance between 1 or more IGBT's.

4133 LCL Fan Speed Fault

LCL cooling fan not tracking commanded output.

4144 DC-link Voltage High 2

The voltage of the DC link is above the nor- mal operating range. Can be caused by too fast motor braking or grid transients. Increase deceleration time, enable the overvoltage controller, use AC brake, or use a brake resistor while braking.

4145 DC-link Voltage High 1

The voltage of the DC link is above the nor- mal operating range and has reached a critical level. Can be caused by too fast motor braking or grid transients. Increase deceleration time, enable the overvoltage controller, use AC brake, or use a brake resistor while braking.

4146 DC-link Voltage Low

The DC-link voltage is below the normal operating range. Try to enable undervoltage protection to keep the drive running as long as possible.

4147 DC-link Voltage Ripple

Excessive voltage ripple has been detected on the main DC-link capacitors. This can be caused by an imbalance of the grid. Reduce the output power.

4148 DC-link Imbalance

An imbalance across the DC-link capacitors is detected. The imbalance can be caused by a component fault of the DC link. If the fault remains after resetting the drive, service is required.

4149 DC-link Short Circuit

An internal short circuit is detected in the DC link. Service is required.

4150 DC Capacitor Short Circuit

A short circuit in a DC-link capacitor is detected. Service is required.

4151 DC-link Short Circuit 2

A short circuit in the DC-link capacitor is detected. Service is required.

4160 Missing Grid Phase

A missing phase is detected on the grid side. Check the grid supply, cables, connections, and fuses.

4161 Grid Frequency Out of Range

A grid frequency outside the normal operating range is detected.

4162 Grid Voltage Spikes

Excessive spikes on the grid voltage have been detected.

4163 Grid Imbalance

A large imbalance of the grid voltages is detected. Check for uneven loads on the grid.

4164 Grid Voltage High

Grid voltage (RMS) above the normal operating range is detected.

4165 Grid Voltage Low

A grid voltage (RMS) below the normal operating range is detected.

4166 Grid Synchronization Error

The drive is unable to maintain the synchronization to the grid voltage.

4175 Motor Disconnected

The motor is disconnected.

4176 Missing Motor Phase

A missing motor phase is detected. Check motor, motor cables, and connections.

4177 Motor Thermal Overload

A thermal overload of the motor has been detected. Check if the shaft torque is too high.

4178 Motor Speed High

The motor speed is above the normal operating range.

4179 AMA Current Low

The nominal current of the motor is too low for accurate results of automatic motor adaptation (AMA).

4180 Rotor Angle Detection Error

Rotor angle detection has failed. This might be as the motor is not suited to the drive or the motor is missing.

4181 Low Motor Saliency For High Frequency Injection Mode

Motor saliency is too low for HF injection mode.

4182 Motor Sync Loss

Select the drive response if synchronization between motor and drive is lost. This is only used when using a permanent magnet or synchronous reluctance motor.

4192 Position Following Error

The actual position is outside the allowed range of the position error window around a position demand value for longer than the position error delay.

4193 Position Limit

Motor position is outside the allowed range [PositionMin, PositionMax].

4194 Position Command Rejected

Position command was rejected because of position software end limit.

4195 Hardware End Limit

The positioning controller detected that the drive is exceeding the hardware end Limits.

4200 Power Option Temp. High 1

The temperature of a power option has exceeded the normal temperature range. Check the cooling conditions. Reduce the load or the ambient temperature.

4201 Power Option Temp. High 2

The temperature of a power option has reached a critical level. Check the cooling conditions. Reduce the load or the ambient temperature.

4202 Power Option Temp. Low

The temperature of a power option component is too low. Check the ambient temperature. Increase the ambient temperature or consider an external heater to increase the temperature around the power option.

4203 Power Option Temp. Limit

The temperature of a power option component is at the upper limit of the normal temperature. Check the cooling conditions. Reduce the load or the ambient temperature.

4204 Power Option Temp. Im- bal. 1

The thermal imbalance between the power option components exceeds the normal operating range.

4205 Power Option Temp. Im- bal. 2

An excessive thermal imbalance between power option components has been detected.

4206 Power Option Temp. Im- bal. Limit

The thermal imbalance between the power option components is at the upper limit of the normal operating range.

4256 Address Conflict

The fieldbus has identified an Address Conflict on the network which made the device back off.

4257 Ethernet Cable Fault

At link down a measurement is done to measure the distance to the far end of the cable, indicating where the fault has occurred. This warning occurs at distances > 4 m and Link State Change Down. Actual distance shown in detailed info.

4258 Invalid Fieldbus Configuration

An issue due to an invalid configuration of the fieldbus connection has been detected. Features not supported by the device, mismatch between configured and actually available features or modules not available in the device. See additional detail info.

4260 Redundant Controller Missing

One or more of the expected fieldbus controllers are missing.

4261 Fieldbus Topology Mis- match

The current fieldbus topology does not match the topology provided at commissioning time.

4263 Ethernet Link Status Changed

There has been detected a change of the Ethernet link status. Additional info has details about which port and state.

4265 Ethernet Redundancy Error

Primary or backup physical paths has been detected missing.

4266 X1 Cable Redundancy

Indicates that physical path from X1 interface to the controller is missing or wrongly configured.

4267 X2 Cable Redundancy

Indicates that physical path from X2 interface to the controller is missing or wrongly configured.

4268 FieldbusStartUp

Internal occurrence to mask away TopologyMismatch occurrence during startup

4269 Network Time Protocol

Information of Network Time Protocol server. See detailed info.

4273 No EtherCAT Connection

No EtherCAT communication is currently established. Will happen during start-up until first connection is established, or if all connections have stopped (gracefully or disruptively).

4277 Loss of EtherCAT Connection

One or more of the fieldbus I/O connections has failed. This can happen when an established fieldbus I/O Connection has been disrupted by, for example, a cable break or power cut of the PLC or other infrastructure components.

4279 Secondary Process Data Timeout

The fieldbus I/O Data has not been updating any of the process data monitored by the secondary process data monitor (Watchdog2). This can happen when the fieldbus has lost control or the current transferred I/O data is not valid.

4280 Controller Not in Run

Controller not in RUN state.

4281 Interface Configuration Change

Interface configuration changed. See detailed info.

4282 No Modbus TCP Connection

No Modbus RTU communication is currently established. Occurs during start-up until first connection is established, or if all connections has stopped (gracefully or disruptive).

4283 Loss of Modbus RTU Connection

One or more of the fieldbus I/O connections has failed. This can happen when an established fieldbus I/O connection has been disrupted by, for example, a cable break or power cut of the PLC or other infrastructure components.

4304 License Missing

A required license is missing.

4349 Authenticity Error

Files authenticity verification error occurred.

4350 Configuration Error

An invalid system configuration has been detected.

4351 System Fault

A system fault has been detected. See additional information for details.

4352 Ground Fault 0

A high-impedance ground fault is detected on the output. Check the insulation of motor cable and motor.

4353 Ground Fault 1

A high-impedance ground fault is detected on the output. Check the insulation of motor cable and motor.

4354 Ground Fault 2

A low-impedance ground fault is detected on the output. Check the insulation of motor cable and motor.

4355 Ground Fault 21

A high or low-impedance ground fault is detected on the output. Check the insulation of motor cable and motor.

4356 Inverter Short Circuit

A short circuit at the inverter output is detected. Check the motor and motor cable.

4368 Output Current High 0

The output current of the drive has exceeded its normal range at low speed. Shock load or too fast acceleration with high-inertia loads can cause this fault. Check that the motor size matches the drive and the motor data

4369 Output Current High 1

The output current of the drive has exceeded its normal range. Shock load or too fast acceleration with high-inertia loads can cause this fault. Check that the motor size matches the drive and the motor data is correct. Check that the motor shaft can be turned.

4370 Output Current High 2

A critical output overcurrent has been detected. Check for short circuits on the output.

4371 Current Imbalance

A current imbalance between paralleled power units has been detected.

4372 Current Injection Limit

The time limit for the short term current injection has been exceeded.

4373 DC-link Overcurrent

An overcurrent on the main DC-link capacitors has been detected.

4374 DC-link Resonance

A resonance on the DC link with excessive RMS current values has been detected.

4375 Excessive Current Limiting

The output current of the drive has exceeded the current limit multiple times. Check that the motor size matches the drive and the motor data is correct. Check that the motor shaft can be turned.

4377 Smart Derating Fault

A Smart Derating fault is detected. The load is too demanding for the current derating level. Lower the switching frequency if possible.

4378 Current Sensor Fault

A defective current sensor or an error in the calibration of the current sensors has been detected.

4379 CM Current High

An excessive common mode current has been detected in the LCL-filter.

4380 Current Limit Setting Fault

The actual current limit setting is too high relative to the selected constant control frequency level. Reduce the control frequency setting or reduce the current limit setting.

4384 Thermal Overload Rectifier

The rectifier is thermally overloaded. Mission profile is too demanding.

4400 Brake Chopper Overload

A brake chopper overcurrent has been detected. Reduce the brake voltage level and check the rating of the brake resistor.

4401 Brake Resistor Temp. High

The brake resistor temperature is too high. Check the rating of the brake resistor and cooling conditions. Reduce the generated re- generative power.

4402 Brake Resistor Missing

The brake resistor or its connection is missing.

4403 Brake Ch. Switch Shorted

A short circuit of the brake chopper switch has been detected, which can be dangerous. Disconnect power. Service is required.

4404 Brake Failure

A brake failure is detected, further testing will clarify the failure source. Coast first to run the test.

4417 Feedback Option Fault

The Feedback Option is indicating a fault condition.

4418 Bad Speed Feedback

Speed Feedback value is not reliable.

4567 Restore Status

Provides information about the restore operation of a setting.

4600 Option Communication Fault

A fault of the communication with an option has been detected. Cycle power, check that the option is properly installed, contact the Danfoss supplier or the service department if the fault persists. Note the occurrence number for further troubleshooting directions.

4601 Internal Communication Fault

An internal communication fault has been detected. Cycle power, check the wiring if applicable, contact the service provider if the fault persists. Note the occurrence number for further troubleshooting directions.

4602 Option Communication Fault

A fault of the communication with an option has been detected. Cycle power, check that the option is properly installed, contact the Danfoss supplier or the service department if the fault persists. Note the occurrence number for further troubleshooting directions.

4605 Internal Communication Fault

An internal communication fault has been detected. Cycle power, check the wiring if applicable, contact the service provider if the fault persists. Note the occurrence number for further troubleshooting directions.

4606 Internal Communication Fault

An internal communication fault has been detected. Cycle power, check the wiring if applicable, contact the Danfoss supplier or the service department if the fault persists. Note the occurrence number for further troubleshooting directions.

4607 Internal Communication Fault

An internal communication fault has been detected. Cycle power, check the wiring if applicable, contact the Danfoss supplier or the service department if the fault persists. Note the occurrence number for further troubleshooting directions.

4628 STO Activated

The Safe Torque-Off (STO) is activated and an unintended restart is prevented until the STO-request has been reset.

4629 STO Fault Ch. A

The Safe Torque-Off (STO) is activated due to a discrepancy fault: Channel A is not activated, while channel B is activated.

4630 STO Fault Ch. B

The Safe Torque-Off (STO) is activated due to a discrepancy fault: Channel B is not activated, while channel A is activated.

4631 Internal Communication Fault

An internal communication fault has been detected. Cycle power, check the wiring if applicable, contact the Danfoss supplier or the service department if the fault persists. Note the occurrence number for further troubleshooting directions.

4632 Internal Communication Fault

An internal communication fault has been detected. Cycle power, check the wiring if applicable, contact the service provider if the fault persists. Note the occurrence number for further troubleshooting directions.

4638 Drive to Drive Connection Lost

Drive to drive connection is lost.

4639 High Speed Bus Sync Error

Internal error detected with high-speed bus connection to parallel control unit.

4640 24V Supply Fault

The 24V supply is outside its normal operating range.

4641 24V Backup Mode

The drive is in 24V backup mode. The control section (including parameter configurations) and installed options are kept operational.

4642 3.3V Supply Low

The voltage of the internal 3.3V supply is below its normal operating range.

4643 28V Supply Low T

he voltage of the internal 28V supply is below its normal operating range.

4644 Gate Driver Voltage Fault

The gate driver supply voltage is outside its normal operating range.

4645 Power Board Supply Fault

A power supply fault on the power board has been detected.

4646 Power Supply Voltage

A power supply voltage is outside its normal operating range.

4647 Function Disabled

The protection logic keeps the trip active until the configuration of the power unit protection levels is ready.

4648 High Speed Bus Error

Internal error detected with high-speed bus connection to parallel control unit.

4649 Desat Gate Driver

The gate driver has detected desaturation condition.

4653 Gate Driver Fault

A gate driver fault is detected or a link to the gate driver is broken.

4790 Control Data Error

A data error is detected in the control data database EEPROM.

4791 Invalid PUD

A data error has been detected in the power unit database EEPROM.

4800 Low Storage Space

The available storage space for the file system is low.

4801 Data Logger Storage

Volume restriction limits are preventing additional data logger capture files from being stored.

4802 Event Logger Storage

Volume restriction limits are preventing additional event log capture files from being stored.

4816 PLC Task Overrun

The high CPU load is inhibiting normal operation of the application (PLC task overrun).

4817 PLC Runtime Error

The PLC runtime has stopped responding. The application has been halted.

4832 Node Discovery

Node discovery and configuration are in progress. The modulation is inhibited.

4833 Node Commissioning

Nodes are being commissioned.

4834 Node Missing

A previously commissioned node is no longer available. The drive is waiting for the node to be available. If the node has been removed, recommission the drive.

4853 StartupOccurrence

This occurrence masks over various occurrences that might be active during startup, that we don't want to show the end user

4854 ResetByDemand

Drive reset is requested by user, and will be performed shortly

4855 Internal Fault

An internal fault has been detected. Cycle power, check the wiring if applicable, contact the service provider if the fault persists. Note the occurrence number for further troubleshooting directions.

4856 Internal Fault

An internal fault has been detected (connection from controller). Cycle power, check the internal wiring, contact the service provider

4857 Software Update

The drive is currently performing an update of the software.

4858 Internal Fault

An internal fault has been detected. The power system has not received the required reference for modulation. Cycle power, check the wiring if applicable, contact the Danfoss supplier or the service department if the fault persists. Note the occurrence number for further troubleshooting directions.

4859 Internal Fault

An internal fault (connection from power system) has been detected. Cycle power, check the internal wiring, contact the service provider if the fault persists. Note the occurrence number for further troubleshooting directions.

4860 Unexpected Time Adjust

An internal fault (unexpected time adjustment) has been detected. Cycle power, check the internal wiring, contact the service provider if the fault persists. Note the occurrence number for further troubleshooting directions.

4861 Synchronization Fault

An internal fault (time synchronization error between controller and power system) has been detected. Cycle power, check the internal wiring, contact the service provider if the fault persists. Note the occurrence number for further troubleshooting directions.

4862 PDS

Internal error detected with high-speed bus connection from controller.

4863 Internal Fault

An internal fault (connection with power system) has been detected. Cycle power, check the internal wiring, contact the service provider if the fault persists. Note the occurrence number for further troubleshooting directions.

4980 A Digital Input terminal is unknown by system

A digital input terminal has been selected that is unknown by system. Maybe an option has been moved or removed.

4981 A Digital Output terminal is unknown by system

A digital output terminal has been selected that is unknown by system. Maybe an option has been moved or removed.

4982 An Analog Input terminal is unknown by system

An analog input terminal has been selected that is unknown by system. Maybe an option has been moved or removed.

4983 An Analog Output terminal is unknown by system

An analog output terminal has been selected that is unknown by system. Maybe an option has been moved or removed.

4984 A Digital Output occupied

A digital output is in use by another function or fieldbus. If a Fieldbus has taken control over a terminal, it has priority over parameter selection.

4985 An Analog Output occupied

An analog output is in use by another function or fieldbus. If a Fieldbus has taken control over a terminal, it has priority over parameter selection.

5123 External Exception 1

External Exception 1.

5124 External Exception 2

External Exception 2.

5130 Quick Stop Active

Quick Stop exception active.

5132 Temp. Protection 1

Temperature protection 1 is triggered. The temperature has exceeded the configured value.

5133 Temp. Protection 2

Temperature protection 2 is triggered. The temperature has exceeded the configured value.

5135 Temp. Protection 4

Temperature protection 4 is triggered. The temperature has exceeded the configured value.

5136 Temp. Protection 5

Temperature protection 5 is triggered. The temperature has exceeded the configured value.

5137 Temp. Protection 6

Temperature protection 6 is triggered. The temperature has exceeded the configured value.

5141 Control Panel Connection Lost

The connection to the control panel was lost. Panel control has been released.

5142 PC Tool Connection Lost

The connection to the PC tool was lost. PC control has been released.

5143 Thermistor Monitor 1

The input of thermistor monitor 1 has exceeded the 4 kilo ohm threshold.

5144 Thermistor Monitor 2

The input of thermistor monitor 2 has exceeded the 4 kilo ohm threshold.

5145 Thermistor Monitor 3

The input of thermistor monitor 3 has exceeded the 4 kilo ohm threshold.

5147 Temp. Protection 7

Temperature protection 7 is triggered. The temperature has exceeded the configured value.

5148 Temp. Protection 8

Temperature protection 8 is triggered. The temperature has exceeded the configured value.

5149 Temp. Protection 9

Temperature protection 9 is triggered. The temperature has exceeded the configured value.

5154 Temp. Protection 10

Temperature protection 10 is triggered. The temperature has exceeded the configured value.

5160 Limit Supervision

Selected signal is over/under of supervision limit.

5161 Fieldbus Watchdog Supervision

Fieldbus watchdog supervision has detected too long delay between fieldbus data updates.

5240 Cooling Monitor

The cooling signal is missing.

5250 Filter energization failure.

Filter energization timed out.

5260 Event Simulation

The event with the number 5260 is simulated.

5376 MainCircuitBreakerFeedback

Main circuit breaker feedback exception.

5377 Main Circuit Breaker Feedback Conflict

Mcb open and closed dig inputs in conflict state.

5378 MainCircuitBreakerTripped

Main circuit breaker tripped exception.

5380 PreChargeFailed

Pre-charging failed.

5381 ExternalPreChargeFailed

Pre-charging failed.

5390 DelayedGridFrequencyHighFault

Delayed Grid Frequency High Fault.

5391 DelayedGridFrequencyLowFault

Delayed Grid Frequency Low Fault.

5392 DelayedGridVoltageHighFault

Delayed Grid Voltage High Fault.

5393 DelayedGridVoltageLowFault

Delayed Grid Voltage Low Fault.

5394 GridFrequencyHighWarning

Grid Frequency High Warning.

5395 GridFrequencyLowWarning

Grid Frequency Low Warning.

5396 GridVoltageHighWarning

Grid Voltage High Warning.

5397 GridVoltageLowWarning

Grid Voltage Low Warning.

5801 Grid Code High Frequency 1

5802 Grid Code High Frequency 2

5803 Grid Code High Frequency 3

5807 Grid Code High Voltage 1

5808 Grid Code High Voltage 2

5809 Grid Code High Voltage 3

5804 Grid Code Low Frequency 1

5805 Grid Code Low Frequency 2

5806 Grid Code Low Frequency 3

5810 Grid Code Low Voltage 1

5811 Grid Code Low Voltage 2

5812 Grid Code Low Voltage 3

5813 Grid Code Low Voltage 4

5817 Grid Code Rocof 1

Grid Code Rocof 1

5818 Grid Code High Mean Voltage

Grid Code High Mean Voltage

5819 Grid Code Narrow Frequency Trip

Grid Code Narrow Frequency Trip

5820 Grid Code External Trip

Grid Code External Trip

5821 Grid Code Island

Grid Code Island

5822 Grid Code Negative Sequence Voltage

Grid Code Negative Sequence Voltage

5823 Grid Code Positive Sequence Voltage

Grid Code Positive Sequence Voltage

5824 Grid Code No Settings

Grid Codes are active without confirmed settings. This is the converter initial state. Grid Codes are active without settings to prevent an accidental drive start to the grid. Set or select correct grid code settings before starting the converter.

See parameters:

- P2.11.1.1 No. 5593 Grid Code Activation
- P2.11.1.2 No. 5785 Grid Code Setting Selection
- P2.11.1.3 No. 5786 Grid Code Region Selection

Danfoss Drives Oy
Runsorintie 7
FIN-65380 Vaasa
drives.danfoss.com

Any information, including, but not limited to information on selection of product, its application or use, product design, weight, dimensions, capacity or any other technical data in product manuals, catalog descriptions, advertisements, etc. and whether made available in writing, orally, electronically, online or via download, shall be considered informative, and is only binding if and to the extent, explicit reference is made in a quotation or order confirmation. Danfoss cannot accept any responsibility for possible errors in catalogs, brochures, videos and other material. Danfoss reserves the right to alter its products without notice. This also applies to products ordered but not delivered provided that such alterations can be made without changes to form, fit or function of the product. All trademarks in this material are property of Danfoss A/S or Danfoss group companies. Danfoss and the Danfoss logo are trademarks of Danfoss A/S. All rights reserved.

M00511
AB566232147932en-010101
Danfoss Drives Oy © 2026.07

1 3 6 R 0 5 0 6