Need intelligent power conversion to drive the energy transition?

Discover solutions for BESS, Power-to-X, fast charging, data centers, shore supply and power generation



iC7-Hybrid highlights

- Unrivalled power density and efficiency in SiC-based liquid-cooled solution
- Build your own. Own your value with liquid-cooled system module offering
- Fully integrated outdoor String PCS for transformerless BESS applications
- Excellent control performance for modern grid forming systems
- Robust simulation model offering based on model-based design
- Cybersecure by design according to 62443-4-2 SL-C-2
- Highest quality and reliability based on IATF 16949 automotive quality standards
- Global presence: Secure your supply chain with our local, carbon neutral production
- Supported worldwide by DrivePro® services

Over 50 years in pioneering power electronics prepares us well to innovate for tomorrow

Contents

Solutions for your industry 3
Intelligent grid control for low-inertia grids 5
Simulation reduces time to market ... 6
iC7-Hybrid grid control and software
– Grid Converter with Grid Codes application 6
– DC/DC Converter application 7
Simulation reduces time to market ... 9
Features to enhance grid performance 10
Modular architecture 11
DrivePro® Services 12
Introduction iC7-Hybrid variants 15

Specifications and dimensions

iC7-Hybrid String PCS, 300 kVA 1500 V 16
Features and benefits 16
Key specifications 18
iC7-Hybrid Liquid-cooled system modules 19
Features and benefits 20
Key specifications 21
iC7-Hybrid Liquid-cooled grid converter, 1500 VDC 24
Key specifications 25
Ratings 26
iC7-Hybrid DC/DC Converter 30
Ratings 31
Dimensions 33
Highly compact cooling unit 34



Solutions for your industry

Unlock the full potential of electrification with the iC7-Hybrid, an intelligent power converter engineered for energy storage, data centers, power-to-X, fast charging, and shore power. Backed by an IATF 16949 automotive-grade global supply chain, it empowers local system integration while combining grid-forming expertise. iC7-Hybrid also delivers fast control for low-inertia grids, certified cybersecurity, advanced simulation capabilities, and comprehensive grid code compliance.

The iC7-Hybrid comes in several variants:

iC7-Hybrid String PCS: An outdoor-ready (IP65) solution for battery energy storage systems. It uses string topology, which allows for the independent charging and discharging of batteries, including the combined use of new and old batteries.

iC7-Hybrid liquid-cooled system modules: These are robust and ultra-compact power converters designed for system integration. The remarkablly small footprint is achieved using pre-wired integration units that contain the filters.

iC7-Hybrid liquid-cooled system modules 1500 V DC: This variant offers a higher voltage rating, making it suitable for large-scale battery energy storage systems and other high-voltage DC applications.

It provides superior power density and efficiency thanks to silicon carbide (SiC) technology.

	Air-cooled String PCS	Liquid-cooled Grid Converter	Liquid-cooled DC/DC Converter
BESS	X	X	X
Power-to-X		X	X
Ultra-fast charging		X	
Shore power	X	X	
Power generation		X	
Data center	X	X	X
Ratings			
AC voltage	400-690 V AC	380-690 V	
DC voltage	650-1500 V DC	500-1500 V DC	640-1100 V
Power	300 kVA	200-9083 kVA	300-3600 kW











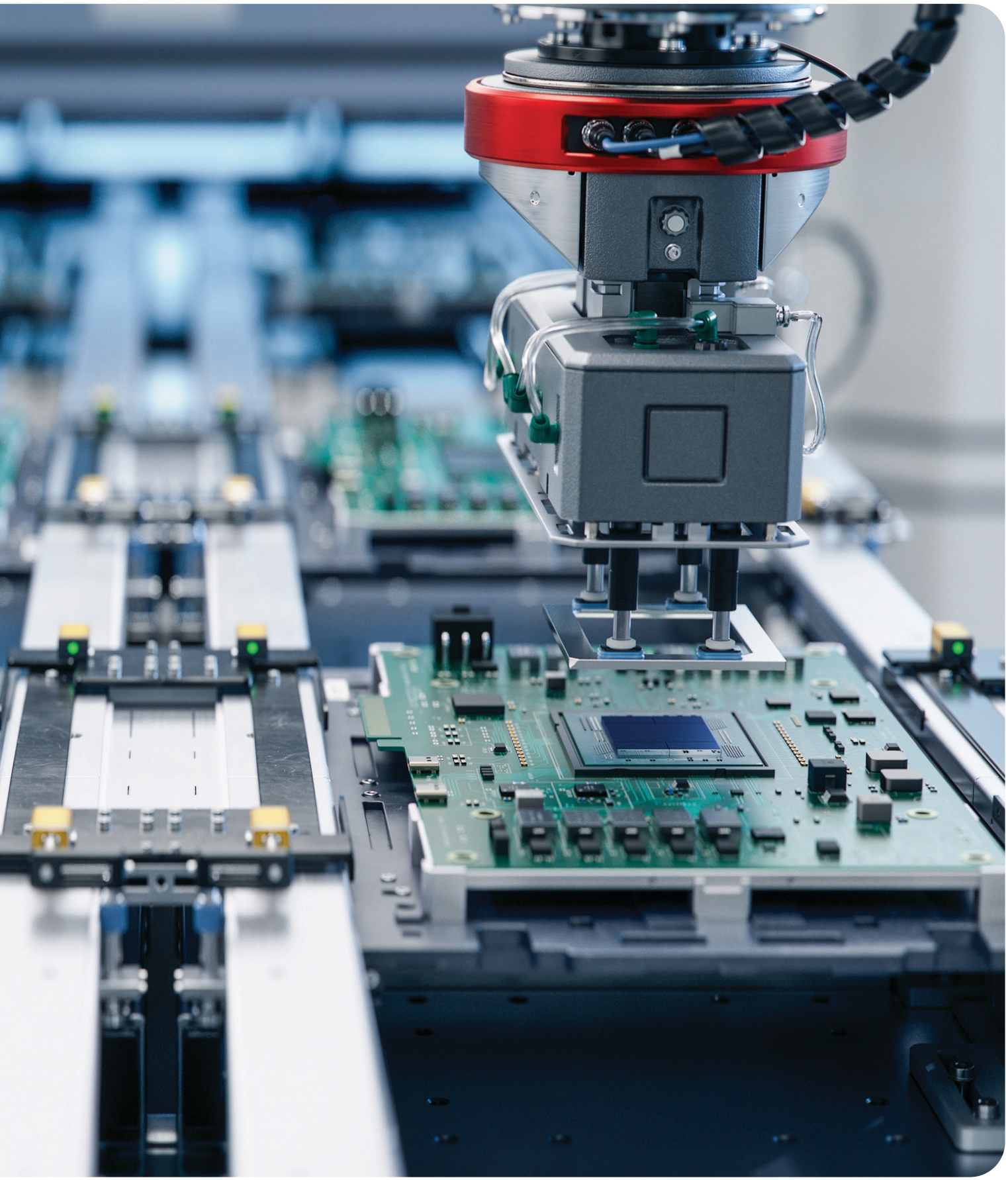

Intelligent grid control for low-inertia grids

The iC7-Hybrid stands at the forefront of power conversion technology, delivering excellence in grid performance.

It features fast control loops that adeptly handle and stabilize power system dynamics, ensuring a reliable energy flow.

A key strength is its exceptional ability to operate in networks with a low short-circuit-ratio (SCR), a challenging condition where it demonstrates superior grid-forming capabilities.

Broad grid code compliance and a flexible fieldbus interface allow for seamless integration into diverse systems.

	Operating modes	Functions
GFL Grid-following	• Power control • DC voltage control • DC current control	• Power dispatch • Power factor control • Anti-islanding detection
GFM Grid-forming	• Island (isochronous) • Droop control • Droop control with base load • Power control	• Synthetic inertia • Virtual synchronous generator • Oscillation damping • Stable oepration at low SCR • Black start • Primary frequency control • Voltage regulation • Power dispatch

Grid converter – common capabilities

- Active power functions P(f), Frequence Sensitive Mode
- Reactive power functions Q(U), Q(P)
- Fault ride through with reactive current injection
- Seamless transition between Grid-following and Grid-forming
- Synchronization to external grid (2 x 3-phase external voltage measurement)
- Microgrid voltage harmonics compensation
- Short circuit current injection (GFM only)
- Customizable fieldbus interface (Modbus TCP, PROFINET RT, EtherNet/IP, EtherCAT)

iC7-Hybrid grid control and software

Grid Converter with grid codes – for intelligent grid control

The Grid Converter application software meets diverse power conversion needs ranging from local microgrids to utility scale grids with grid code requirements.

- AC-coupled energy storage
- Energy storage
- Micro grid forming
- Data center DC power supply
- Electrolyzer DC power supply
- AC and DC shore power systems
- DC power supply for hydrogen electrolysis
- and other flexible AC/DC power conversion applications.

Grid Converter provides the flexibility to choose grid-forming or grid-following control with various control objectives from active and reactive power control to AC or DC-voltage control. Grid converter software gives you:

- Flexible operating modes and reference handling for streamlined power management
- Seamless online transitioning between grid-following and grid-forming control unlocks new system design possibilities
- Fast control loops meet the modern low-inertia low SCR network requirements
- High synthetic inertia and short circuit current injection capability reduces oversizing which leads to space and cost savings
- Unrivaled paralleling solutions for high power installations
- Provides resilience with blackout prevention and black-start capability

Meets modern grid-connected grid-forming requirements such as synthetic inertia, oscillation damping, and virtual synchronous generator mode.

Grid Codes application software key features

Main control references		Key features
Grid following	– AC power control – DC voltage control – DC power and DC current – Limit controllers	– Grid code compliance (GFL, GFM*) – Active power functions P(f), Frequence Sensitive Mode – Reactive power functions Q(U), Q(P) – Fault ride through with reactive current injection – Anti-islanding detection (GFL) – Black start (GFM) – Synthetic inertia (GFM) – Virtual synchronous generator (GFM) – Oscillation damping (GFM) – Stable operation at low SCR (GFM) – Short circuit current injection with high overloadability (GFM) – Smooth transition between GFL and GFM during run state – Synchronization to external grid (2 x 3-phase external voltage measurement) – Blackout prevention (grid forming power reference maintains grid when limit is hit) – Transformer interactive control & voltage drop compensation (microgrid) – Microgrid voltage harmonics compensation – Filter energization & transformer pre-magnetization – Voltage harmonics compensation (microgrid) – I/O, fieldbus, PC and control panel control place changeover during run state – Dedicated fieldbus control and status words & fieldbus customizer – Comprehensive supervisions, protections, exceptions & limits – Main circuit breaker and pre-charge control – Operation at reduced power in case one of the power units is out of operation
Grid forming	– Island mode (isochronous) – Droop control with base load – Power control – Limit controllers	
Fieldbus protocols	– Modbus TCP – PROFINET RT – EtherNet I/P – EtherCAT	

DC/DC Converter – for energy source and storage application software

DC/DC Converter converts direct current (DC) from one voltage level to another, to overcome any voltage mismatch between energy source and the system DC-voltage.

Tap into the energy saving opportunities of peak shaving and time shifting. Do this by connecting batteries and fuel cells to a DC distribution grid or the DC-bus of a drive system. Increase the redundancy and availability of the system by utilizing the energy source as back-up power supply.

iC7-Hybrid with DC/DC Converter application is the ideal solution for high efficiency bi-directional DC to DC power conversion and gives you:

- Flexible voltage, current and power control references for accurate DC-bus and DC-source control.
- Ultra-fast control response, to handle the system dynamics
- Ability to Transition seamlessly between control modes and control places while running
- Limit controllers to improve system stability & resilience
- Fit for purpose features for energy source applications
- Dedicated fieldbus status and control words as well as fieldbus customizer
- Fault simulation to accelerate system development & commissioning



DC/DC Converter application software key features

Control references		Fit for purpose application features
	– DC bus voltage and current control – DC source voltage, power and current control – DC bus voltage as well as source voltage and current limit controllers – Buck or boost operation	– Smooth transition between control modes during run state – Droop controllers for voltage references and limit controllers – I/O, fieldbus, PC and control panel control place changeover during run state – Dedicated fieldbus control and status words – Fieldbus customizer – Black start from 350 V DC and higher – Resilient mode enables operation at reduced power in the event that one of the parallel system modules is out of service
Fieldbus protocols	– Modbus TCP – PROFINET RT – EtherNet I/P – EtherCAT	

iC7-Hybrid supports these functional extensions:

- I/O and relay option
- Temperature measurement option
- Voltage measurement option


#danfossdrives50

Simulation reduces time to market

Remove the constraints of the physical environment and open up new opportunities using iC7 simulation models which perfectly mirror the converter.

You can predict performance, test scenarios, streamline commissioning, and collaborate across teams and locations in an open environment.

The iC7 platform is founded on model-based design, which ensures the simulation models are always valid: up to date and accurate.

These models comply with the FMI standard and are easy to integrate in your simulation platform.

MyDrive® Virtual simulation models reduce time to market

Remove constraints of the physical environment.

FMU models of Grid Converter, DC/DC Converter and Generator application are available for system simulation.

MyDrive® Virtual

Predict system behavior from your desk

Are you a transmission system operator who would like to know:

- How the Danfoss grid converters can provide dynamic grid support?
- The capability of Danfoss grid converters for low voltage ride through (LVRT) and high voltage ride through (HVRT)?
- How the Danfoss grid converter can be used to provide AC voltage and frequency stability?
- How the Danfoss grid converter reacts in the event of grid voltage phase jumps?
- How the Danfoss grid converter acts in the event of faults, with regards to fault current injection. How does it recover in a post-fault active power recovery?

Simulation models for grid connection studies

Danfoss provides a wide range of simulation models to ensure a smooth grid connection process.

- PSS/E RMS model
- PSCAD EMT models
- DIgSILENT PowerFactory EMT and RMS models

Discover more simulation offerings

Power factory models

- Customer needs simulations software but no hardware
- iC7-EMT, NXP EMT and RMS (grid following modes)

PSCAD models

- Customer needs simulations software but no hardware
- EMT models only

PSS/E models

- Customer needs simulation software but no hardware
- RMS models only in grid following mode for NXP
- RMS models both in grid following and grid forming mode for iC7

fmi Functional Mock-Up Interface MATLAB & SIMULINK DIGSILENT PSCAD PSS®E

Features to enhance performance

Quality in focus

Reliable and predictable operation has been a key driver. With an ISO 9001-certified and IATF 16949-compliant quality system combined with use of 6-Sigma principles, quality and reliability are at absolute market-leading standards.

Reliability is assured by design based on application load profiles and data collected from intensive simulations and feedback from exhaustive testing.

The finished products are 100% full load tested ensuring reliability before leaving the factory.

Global presence

Secure your supply chain with our local carbon-neutral production. Danfoss has a worldwide presence with local sales, support, and service network ensuring fast reposnse, no matter where you are based. Danfoss is an established global leader in power electronics, pioneering the field since 1968.

Secure-by-design

Your drive is equipped with market-leading hardware-based protection against unauthorized access with a built-in crypto chip on the control unit.

Certified for cybersecurity according to IEC 62443-4-2.

Learn more about cybersecurity

Supported by MyDrive® tools

You can use MyDrive® tools on the device of your choice, supporting the entire lifecycle of the iC7 power converter; from selection and dimensioning, through programming and commissioning, to maintenance and support during operation.

MyDrive® Insight

Engineering support

Danfoss provides an extensive selection of support material and tools to help in engineering, such as:

- Dimensioning tools, such as MyDrive® Select, MyDrive® Harmonics and MyDrive® Energy
- EPLAN P8 macros
- Dimensional and electrical drawings
- Local expert support
- Engineered-to-order enclosure solutions

Application Development Centers



Modular architecture
Setting the standard for modular control

A flexible, modular, control architecture means you can tailor the control functionality exactly to your needs. You can purchase exactly the control options you need, or replace PLC components, I/O and external safety components.

This modularity gives you not only more flexibility, but more secure integration of drives and power converters in the control system and IT architecture. You achieve faster set-up, and smarter monitoring, data gathering and analytics thanks to support for multiple communication protocols.

The purchase cost is lower since you only buy the necessary control options, saving excess unused functionality. The power converter can reduce your costs further by substituting for a low-end PLC controller/system.

Program execution close to the process opens new possibilities thanks to reduced delays. Built-in security protects your IPR and service business.

Technical information

- Integrated Ethernet port
- Modbus TCP as standard and other fieldbus protocols optional
- Basic I/O: 6 x DI, 2 x DO, 2 x AI +/-10 V/0-20 mA, 1 x AO (0-10/4-20 mA), 2 x NO/NC RO, 1 x NO RO, 1 x Thermistor
- One optical fiber pair as communication link with power module or star coupler board
- For more options such as voltage measurement, temperature measurement, relay option, and encoder option, refer to the web page.

Functional extensions

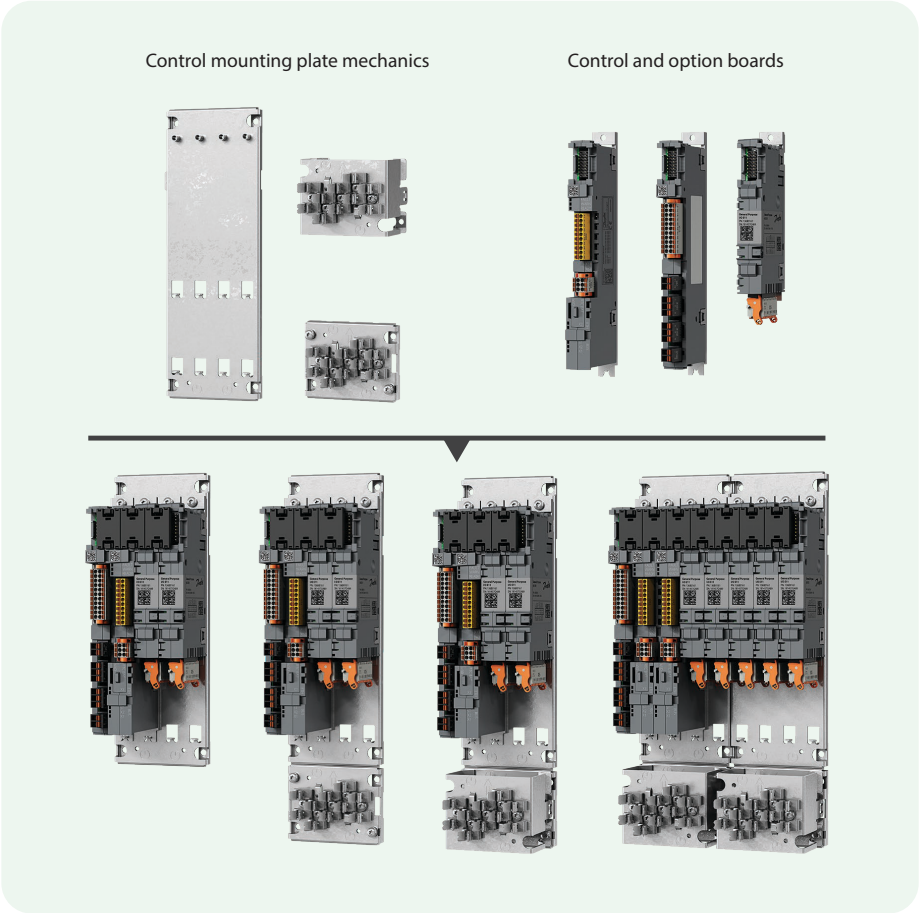



DrivePro® Services

Delivering a customized service experience!

Every drive application is different. DrivePro® Services is a collection of **tailor-made products designed around your needs.**

From optimized spare part packages to condition-monitoring solutions, we deliver customized service offerings to **support your business through the different lifecycle stages of your drive.**



DrivePro® 360Live

Achieve excellence with precision of maintenance
An installed base management solution to register and effectively optimize drives maintenance.



DrivePro® Extended Warranty

Even the best performing drives need protection. DrivePro® Extended Warranty offers a wide range of warranty options and provides the longest coverage in the industry up to 72 months.



DrivePro® Site Assessment

Optimize your maintenance strategy with a complete onsite survey and risk analysis of all your drives collected in one detailed report. Together with a Danfoss expert, you can build a tailored plan for future maintenance, retrofits, and upgrades.



DrivePro® Start-up

DrivePro® Start-up includes a full range of operating health checks and parameters adjustments. Based on a manufacturer's commissioning checklist, our experts will inspect and test your drive and its motor performance to ensure the best configuration of your drives.



DrivePro® Spare Parts

Maximize uptime and maintain peak performance throughout the lifetime of your drives with DrivePro® Spare Parts by making sure you are equipped with the original spare parts from Danfoss Drives.



DrivePro® Exchange

Maintain uptime with a fast alternative to repair when there is a time critical situation. If a drive fails, the DrivePro® Exchange service can quickly exchange any drive to a new unit of the same type to ensure as little production delay as possible.*

** DrivePro® Exchange is available for iC7-Automation Frequency Converter only*

To learn which products are available in your region, please reach out to your local Danfoss Drives sales office or visit our website.

Read more about DrivePro®

Local contacts


POWERED BY
Danfoss

Introduction to iC7-Hybrid variants

iC7-Hybrid is available in air-cooled and liquid-cooled variants, each designed to optimize power conversion systems:

iC7-Hybrid String PCS 300 kW 1500 V is an intelligent air-cooled power conversion system (PCS) fully integrated and ready for outdoor applications.

iC7-Hybrid liquid-cooled system modules offer IP00 building blocks for system integrators to create ultra-compact high efficiency power systems. We offer liquid-cooled system modules in a wide range of voltages to serve applications up to 1500 V. Grid Converter and DC/DC Converter functionality is available to serve diverse power conversion needs.

Fact sheets:
- iC7-Hybrid String PCS
- iC7-Hybrid liquid-cooled system modules
- iC7-Hybrid liquid-cooled 1500 V

Looking for inverter modules for power generation applications?
- See iC7-Marine & iC7-Hybrid Selection guide





Illustrations not to scale

iC7-Hybrid String PCS, 300 kVA 1500 V

Highlights

- 3-phase string Power Conversion System (PCS) for 1500 V DC applications
- Independent AC and DC paralleling provides redundancy and flexibility to adjust PCS power for diverse battery configurations
- Transformerless paralleling topologies and EMC compliance
- Grid-forming, black start, and grid-following
- Rugged IP65 housing for outdoor use
- Highest quality and reliability based on IATF 16959 automotive quality standards
- Comprehensive simulation offering ensures smooth grid connection process



Features of iC7-Hybrid String PCS	Benefits
Transformerless	Installation cost reduction
Integrated pre-charge, including complete pre-charge and auxiliary power supplies	Enables black start in microgrids Reduces system integration effort
Wide voltage range 400-690 V AC / 565-1500 V DC	Flexibility for wide range of grid and battery voltages for transformerless connection
Automatic power reversal will provide blackout prevention in grid-forming mode.	Resilience for high grid stability
Developed using FMI-compatible model-based design	Easy to integrate into your simulation platform Each simulation model is a true digital twin and always up-to date
Online transition between grid-following and grid-forming control modes during run state	Fast response, easy power management
Cybersecure-by-design	Compliant with cyber security regulations

The iC7-Hybrid String PCS is an intelligent power conversion system (PCS) ready for outdoor application (IP65). It is a superior solution for battery energy storage applications, since it allows for string topology for the batteries.

It allows independent charge/discharge of batteries and use of old and new batteries in the same system using a single AC connection. These capabilities result in higher capacity utilization, reduced downtime, superior serviceability, flexibility, and scalability – to name a few highlights.

The PCS can be installed directly in an outdoor environment without additional protection. All the necessary auxiliary components are integrated, including protection such as switches, DC-fuses and surge protection, thereby eliminating the need for additional system integration or outdoor cabinets.

Transformerless topology

The transformerless technology developed by Danfoss allows connection to industrial networks without a dedicated transformer, for grounded and floating systems.
This provides a true installation cost reduction for behind-the-meter applications.

Common mode voltage filtering technology ensures clean grid and clean DC power for battery connection.

Grounded network

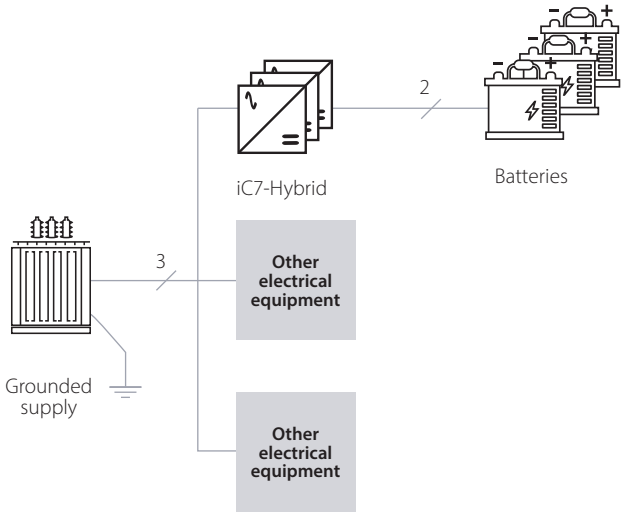

Integrated AC and DC pre-charge [1]

The product includes pre-charge and auxiliary power systems for both AC and DC supply, enabling black start in microgrid.

All electrical protection and service switches are integrated in the IP65 outdoor housing.

[1] AC precharge functionailty is pending.

Integrated pre-charge

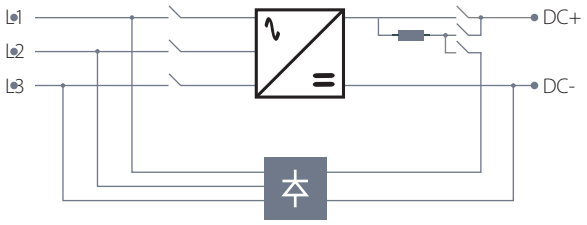

Integrated protection: Powering reliability

Reliability is key in energy storage systems, and comprehensive protection is essential for ensuring this reliability. By integrating surge protection devices (SPDs), DC-fuses, and safety isolation switches for service, all housed in an IP65 rated outdoor enclosure, we safeguard sensitive components from electrical threats. This ensures system uptime while maintaining safety and compliance with regulatory standards. The iC7-Hybrid String PCS features this integrated protection, eliminating the need for external devices.

iC7-Hybrid String PCS 300 kVA 1500 V – with full integration

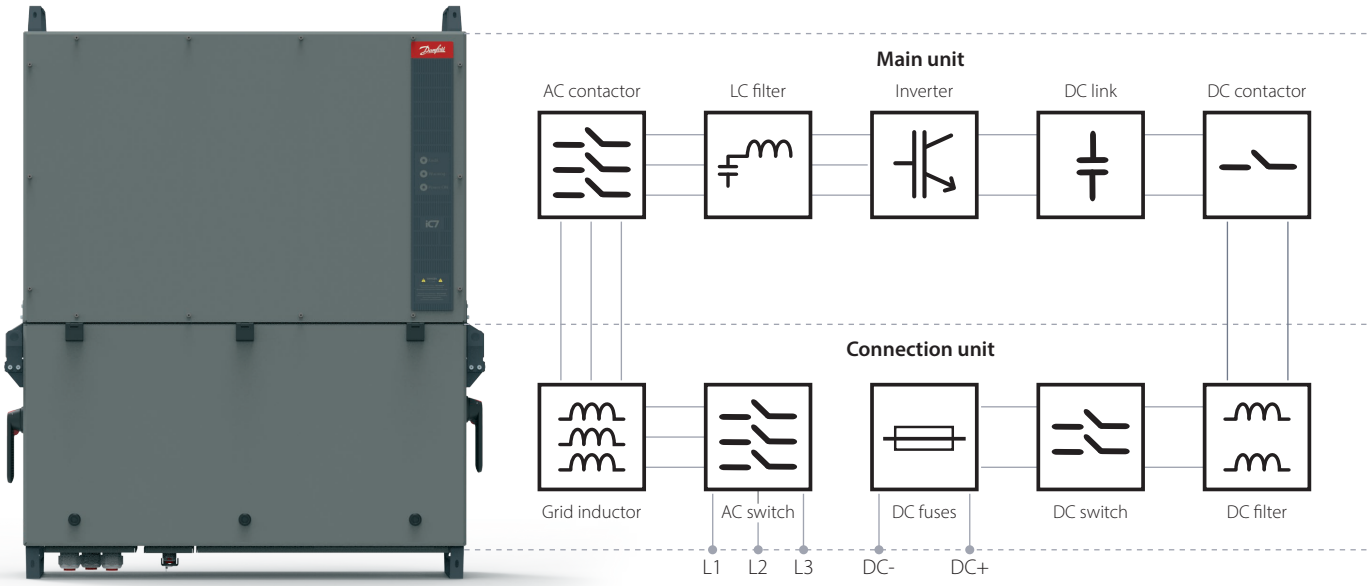

Key specifications iC7-Hybrid String PCS

AC connection	
Rated power (@ ≤ +40°C)	300 kVA
Maximum power (@ ≤ +30°C)	333 kVA
Rated voltage	400-690 V AC -15+10%
Voltage range at rated power (@ ≤ +30°C)	-15% to +10%
Rated AC current (@ ≤ +40°C)	252 A
Maximum AC current (@ ≤ +30°C)	279 A
THD (at rated power)	< 3%
Power factor range	0.0-1.0 (lagging/leading)
Grid frequency	44-66 Hz
Grid connection type	TN-S, TN-C, IT
Paralleled units on same transformer	12
DC connection	
Battery voltage range	650-1500 V DC [1]
Maximum voltage	1500 V DC
Maximum current	345 A
DC short-circuit current rating	50 kA/100 kA
Number of DC connections	1-2
Paralleled DC connections	Yes (contact for more information)
Efficiency	
Maximum efficiency	98.5%

[1] Assuming up +10% voltage variation. Lower AC voltage allows wider DC voltage range.
[2] Available soon

Compliance	
EMC immunity	IEC/EN 61000-6-2
EMC emissions	CISPR 11, IEC/EN 61000-6-4[2]
Marking	CE
Electrical safety	IEC-62477-1 UL1741 [2]
Grid codes	EN 50549-1:2019, EN 50549-2:2019 and EN 50549-10:2022 VDE-AR-N 4110 and VDE-AR-N 4120 ENTSO-e (Regulation 2016/631) UL 1741 SB [2]
Cybersecurity	
Cybersecurity compliance	– Product certification IEC 62443-4-2, with Security Level Capability 2 (SL-C 2) – Product development process IEC 62443-4-1
Environment	
Enclosure rating	IP65/NEMA 4
Ambient temperature for rated power	+40°C
Operating ambient temperature range	-40 °C to +60 °C
Typical/maximum acoustic noise level	< 73 dB(A)/< 80 dB(A)
Humidity	Outdoor conditions
Cooling	Forced air, variable speed
Dimensions and weight	
Total dimensions (H, W, D)	1286 mm x 1076 mm x 463 mm
Weight	Main unit: 129 kg Connection unit: 112 kg Mounting rack: 10 kg
Maximum operation altitude	4000 m *(For derating above 1000 m altitude, refer to the Design Guide)*

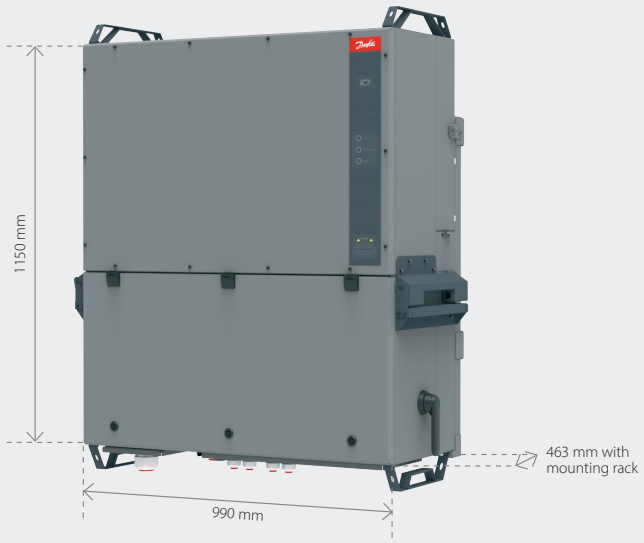

iC7-Hybrid liquid-cooled system modules

Need flexible integration with extraordinary power density?

Optimize installation footprint, speed and reduce costs more than you dreamt possible, with the revolutionary iC7 series liquid-cooled system modules with integration unit.

New filter technology enables superior power density and achieves smaller footprint in your electrical room. Filters integrate beneath the module, so you don't need extra cabinet space for them.

Liquid cooled system modules offer superior efficiency especially in the 1500 V variant which comes with SiC technology.

Enjoy optimal cabinet integration, with input and output filters contained within the pre-wired integration unit. Mechanical integration is fast with unified mechanical interfaces and modular design.

Meet weight restrictions more easily with iC7 liquid-cooled system modules, which are amazingly lightweight compared to standard solutions on the market.

Power density is optimized for a universal 600 mm depth cabinet. Install multiple units in parallel to achieve power range up to 9 MW. Service is faster with lightweight power units; and with quick coolant connectors, there is no need to drain the cooling system.

Reduce your operating costs with industry-benchmark liquid cooling. These modules offer true liquid cooling technology with very low losses to air. There's no need to spend time on connections, since cooling distribution to filters and system modules is built-in.

Robust in harsh environments

The combined vibration, temperature, humidity, and moisture/dust resistance with IP55 electronics compartment, ensures more reliable operation than most alternative drives. Run at 60 °C with no derating.

Achieve flexibility with our highly expandable filter concept. Select your choice of input and output filter options in the integration unit located beneath the module. The same mechanical concept serves Grid Converter and DC/DC Converter functionality.

Highlights

- Save space with world-class power density
- Ideal for lightweight installations due to market-leading low mass
- Reliable even in harsh conditions
- Fast mechanical integration
- Fast and easy service
- Close to silent operation
- Cybersecure by design
- More uptime, longer service intervals and long storage life due to film capacitor technology
- Liquid cooling enables reuse of waste heat for energy efficiency



Features and benefits
– all liquid-cooled system modules

Feature	Benefit
Market-leading power density	Save space and weight
World's most reliable power converter Robust thanks to high quality design: vibration- and shock-resistant aluminium frame with IP55 protected electronics compartment	High uptime Peace of mind even in unpredictable conditions
Output filters and fuses integrate neatly below the power module	Reduced footprint. Reduced cost of integration and service
Performs reliably at high ambient and coolant temperatures	High uptime in harsh environments
Quick connectors, no draining of liquid, quick cabling	Fast serviceability
Cybersecure by design	Reduced risk of unauthorized access or cybersecurity incident Cybersecure according to IEC 62443-4-2 Level SL-C-2
Same mechanical integration for all applications (INU,AFE,GC,DC/DC) means fewer variants are required	Reduce storage required for spares and complexity in integration Simplify serviceability
Modular and scalable. Fewer variants.	Reduce cost of integration Go to market faster Simplify serviceability
Long design life and film capacitor technology	Reduced maintenance downtime
True liquid cooling ensures low losses to air and enables reuse of waste heat for energy efficiency	Highest possible system efficiency Reduced air conditioning need
System modules enable you to add local value in the system integration as an alternative to a turnkey solution	Build your own system. Own your value
Global IATF1649 automotive grade supply chain	Secure your supply chain with our local, carbon-neutral production

Liquid-cooled module types

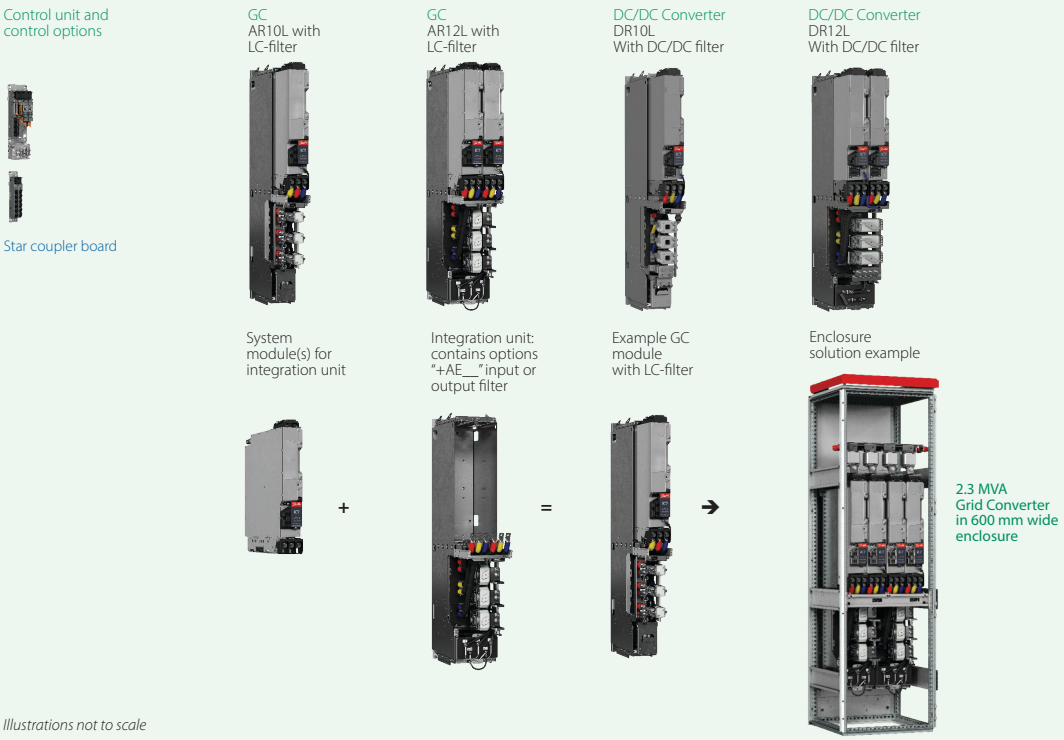

Illustrations not to scale

Key specifications: iC7-Hybrid liquid-cooled system modules

Mains connection (GC)	
Input voltage U_{in}	– Voltage class G7: 3 x 380–690 V AC (-15...+10%) – Voltage class A5/B5: 3 x 380–500 V AC (-15…+10%) – Voltage class 07: 3 x 525–690 V AC (-15…+10%)
Input frequency	– 45–66 Hz, (25-70 Hz with derating of 0.2%/Hz below 45 Hz)
Mains network	– TN-S, TN-C, IT and TT – Supply voltage limited to 500 V AC for corner grounded networks, Wye/Delta
Power factor	– cos φ = 0 ind. to 0 cap: (fundamental)
Total harmonics distortion THDi	– < 5%, <3% with a dedicated transformer
Short circuit current	– The maximum short circuit current I_{cc} ≤ 100 kA
Overvoltage category	– Category III
Imbalance	– Nominal performance with voltage imbalance ≤ 3%. Derated performance with >3% voltage imbalance. – Grid forming maximum imbalanced load: 40% of Sn (nominal power)
DC-bus connection	
DC-bus voltage range	– Voltage class B5, A5: 425–830 V DC (-0...+0%) – Voltage class 07: 640–1100 V DC (-0...+0%) – Voltage class G7: 500–1500 V DC (-0...+0%)
DC short-circuit current rating, with the specified fuses	– Voltage class A5/B5/07: Icc ≤100 kA – Voltage class G7: Icc ≤120 kA (250 kA [1]) – The time constant L/R of the fault loop impedance must be <3 ms with specified fuses.
Overvoltage category	– Category II (requires external SPD above 1250 V DC)
[1] Validation pending	
DC/DC Converter DC-source connection	
DC source voltage range	– 3–100% of DC-bus voltage with limited control performance – 3–97% of DC-bus voltage with full control performance
DC source short-circuit current, with the specified fuses	– I_{cc} ≤100 kA if the time constant L/R of the fault loop impedance <15 ms
Source current ripple with iC7 DC filter	– DR10L/DC10L: AC RMS <1% of IN RMS typical – DR12L/DC12L: AC RMS <0.5% of IN RMS typical
EMC (IEC61800-3)	
Immunity	– IEC/EN 61000-6-2
Emissions	– CISPR11/EN 55011 (Class A, Group 1)

Key specifications: iC7-Hybrid Liquid-cooled system modules (continued)

Environmental conditions	
Protection rating	– IP00/NEMA/UL Open Type
Surrounding operating temperature	– -15...+60 °C (5...140 °F) at I_N – Except -15...55 °C (5...131 °F) at IN for: Voltage class A5, current ratings: 460 A, 970 A, 1900 A, 2800 A, 3720A, 4650 A, 5550 A, 6450 A, 7370 A – Voltage class G7: -15...+50 °C (5...122 °F) at I_N – Control units: -15 ...+55 °C (5...131 °F) at I_N
Relative humidity	– 5-95% RH, no condensation, no dripping water
Environmental conditions operation (IEC 60721-3-3)–	– Climatic conditions: Class 3K22 – Chemically active substances: IEC 60721-3-3 Edition 3.0/ISO 9223-Second Edi-tion, class C4 – Biological conditions: Class 3B1 Mechanically active substances: Class 3S6 – Special climatic conditions (heat radiation): Class 3Z1
Pollution degree	– Power units: PD3 – Control units: PD2
Altitude	– 0-4000 m (0–13000 ft) above sea level, when the network is not corner grounded: Voltage class B5 and A5 – 0-2000 m (0–6500 ft): Voltage class 07, G7
Vibration (IEC 60068-2-6)	– Amplitude ±1.0 mm, 2-13.2 Hz – Constant peak acceleration 7 m/s² (0.7 gn), 13.2-100 Hz with maximum amplification of 5 – Constant peak acceleration 10 m/s² (1 gn), 22.29-150 Hz
Shock (IEC 60068-2-27)	– Maximum 5 g, 30 ms
Sound pressure level SPL [1]	– xM10L, xR10L, xR12L: 70 dB(A) – DM10L, DM12L, DR10L, DR12L: max. 87 dB(A) at worst case operation point – AR12L G7 voltage class: 62 dB(A)
Sound power level SWL [1] [2]	– AR12L G7 voltage class: 67 dB(A)
Conformity	– CE
Safety Standards	– IEC/EN 62477-1

[1] Measured at a distance of 1 m (3.3 ft), the product in a reference cabinet with the doors closed.
[2] Measured according to ISO 3476: 2010.

Liquid cooling	
Temperature of coolant	– -10…+45 °C (14...113 °F) at I_N (nominal) – Except -10…+40 °C (14...104 °F) at I_N (nominal) for: Voltage class A5, current ratings 460 A, 970 A, 1900 A, 2800 A, 3720A, 4650 A, 5550 A, 6450 A, 7370 A. – Except -10…+38 °C (14...100 °F) at I_N (nominal) for: GC, voltage class 07, current ratings 380 A, 760 A, 1500 A, 2250 A, 2940 A, 3600 A, 4320 A, 5040 A, 5750 A – Except -10..+38 °C (14...100 °F) for DC/DC converter, voltage class 07, current ratings 1200 A, 2400 A, and 3600 A – Temperature rise during circulation: Max 10 °C (18 °F) – Glycol to be used in coolant below 0 °C (32 °F). Freezing not allowed.
Pressure limits	– Maximum operating pressure (= Design pressure): 500 kPa – Maximum test pressure: 750 kPa
Pressure drop	– 50-100 kPa at rated volumetric flow
Allowed coolants	– Demineralized water and propylene or ethylene glycol, corrosion inhibitor recommended

Run at
60°C
with no derating

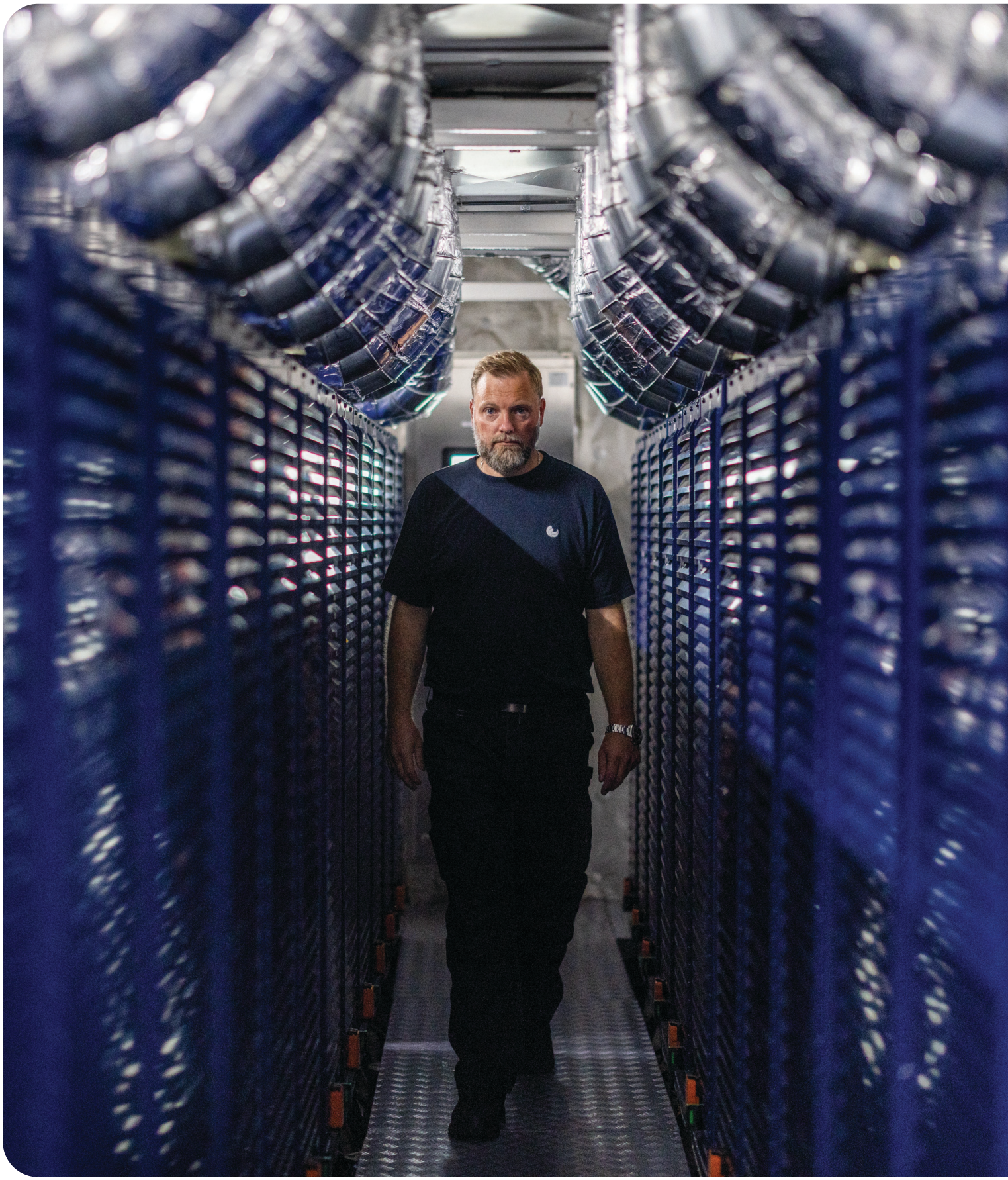

iC7-Hybrid liquid-cooled grid converter, 1500 V DC – the ultimate in power density

Highlights

- Unrivalled power density for 1500 VDC applications
- Efficient silicon carbide (SiC) technology
- Robust in harsh conditions
- Ultra-low losses to air
- Modular, scalable and serviceable
- Highest quality and reliability based on IATF 16949 automotive quality standards
- Supported by DrivePro® services for global service capability
- Cybersecure according to IEC 62443-4-2 Level SL-C-2



Feature	Benefit
Extensive simulation model offering for grid integration studies	Smooth grid connection process
Developed using FMI-compatible model-based design	Easy to integrate into your simulation platform. Each simulation model is a true digital twin and always up-to-date
Grid-forming with 20 years of experience	Flexibility for on-grid and off-grid applications with same converter
Superior control performance and fast control loops	Meets the requirements of the modern low-inertia networks
Cybersecure by design	Cybersecure according to IEC 62443-4-2 Level SL-C-2

The iC7-Hybrid 1500 VDC Liquid-cooled Grid Converter is the ideal solution when superior power density and efficiency are preferred. It is built in a robust aluminum frame protecting sensitive electronics against environmental conditions and vibration. True liquid-cooled design ensures minimal losses to air.

An IP00 system module offering enables you to add local value in the system integration instead of turn-key solution.

iC7-Hybrid takes power conversion performance to the next level in:

- Energy storage
- Hydrogen electrolyzer power supply
- Shore power supply
- Ultra-fast charging

Global presence:
Secure your supply chain with our local, carbon-neutral production

Key specifications: iC7-Hybrid liquid-cooled grid converter, 1500 V DC

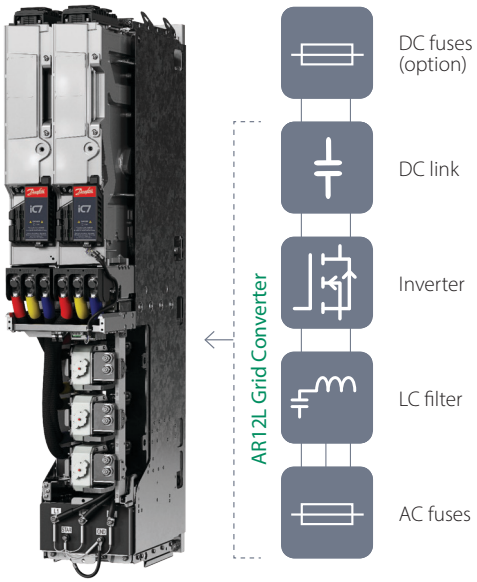

99.2% Euro efficiency

3.24 kW/L



Illustrations not to scale

2.3 MVA Grid Converter
with LC filter in
600 x 600 x 2000 mm enclosure

Mains connection	
Voltage range	3 x 380-690 V AC (-15+10%) 500-1500 V DC
Current range	1000-7600 A AR12L-8xAR12L
DC current range	1180-8777 A
Power range	1196-9083 kVA
Euro efficiency at 1250 V DC	99.2%
Temperature of cooling agent	-10 to +45 °C at (I_N)(nominal), up to 60 °C with derating
Ambient operating temperature	-15 °C (no frost) to +50 °C (at I_N), up to +60 °C with derating
Environmental conditions	
Protection rating drive modules	IP00/UL Open Type; (IP55 protected power electronics)
Dimensions (W x H x D)	235 x 1295 x 566 mm (excluding DC-fuses)
Weight	230 kg
Noise level	SPL: 62 dBA 1 m in a reference cabinet, SWL: 67 dBA
Maximum altitude	2000 m
THDi	<3%
Grid connection type	IT grid, 3-phase. TN-S, TN-C [1]
EMC	
EMC Immunity	IEC/EN 61000-6-2
EMC emissions	CISPR 11 (EN 55011) Class A
Safety	IEC-62477-1
Grid codes	EN 50549-1:2019 [1], EN 50549-2:2019 [1] and EN 50549-10:2022 [1] VDE-AR-N 4110, VDE-AR-N 4120, and VDE-AR-N 4130 ENTSO-e (Regulation 2016/631) [1], UL1741SB [1], CSA 22.3 no. 9 [1]
Cybersecurity compliance	Product certification IEC 62443-4-2, with Security Level Capability 2 (SL-C 2) Product development process IEC 62443-4-1

[1] *Pending*

Ratings: Grid converter (GC) at 690 V AC /1500 V DC

iC7-60SLGCG7, 380-690V AC (500-1500V DC), IP00/UL Open Type Grid Converter module

Model code	AC current [1]			DC current [2]	Power, 690 V AC mains [3]		Frame with	L filter size
	I_N	I_L	I_{S2}	I_{N-DC}	P_N	S_N		
	[A]	[A]	[A]	[A]	[kW]	[kVA]		[A]
iC7-60SLGCG7-760A	776	760	1064	897	919	928	AR12L	1000
iC7-60SLGCG7-970A	1000	970	1358	1156	1184	1196	AR12L	1000
iC7-60SLGCG7-1500	1532	1500	2100	1770	1813	1831	2xAR12L	1640
iC7-60SLGCG7-1700	1736	1700	2380	2005	2054	2075	2xAR12L	1x 2300
iC7-60SLGCG7-1900	1950	1900	2660	2253	2308	2331	2xAR12L	1x 2300
iC7-60SLGCG7-2450	2501	2450	3430	2889	2960	2989	3xAR12L	2 x 1640
iC7-60SLGCG7-2800	2900	2800	3920	3350	3432	3466	3xAR12L	2 x 1640
iC7-60SLGCG7-3270	3338	3270	4578	3855	3950	3990	4xAR12L	2 x 2300
iC7-60SLGCG7-3720	3850	3720	5208	4447	4556	4602	4xAR12L	2 x 2300
iC7-60SLGCG7-4160	4247	4160	5824	4905	5025	5076	5xAR12L	2 x 2300
iC7-60SLGCG7-4650	4800	4650	6510	5544	5680	5737	5xAR12L	3 x 2300
iC7-60SLGCG7-5550	5750	5550	7770	6641	6804	6872	6xAR12L	3 x 2300
iC7-60SLGCG7-6450	6650	6450	9030	7680	7869	7948	7xAR12L	4 x 2300
iC7-60SLGCG7-7370	7600	7370	10318	8777	8993	9083	8xAR12L	4 x 2300

[1] ***Ratings are valid at 1500 V DC nominal voltage***
I_N Nominal (thermal) continuous current. Dimensioning can be done according to this current if the process does not require any overloadability
I_L Low overload – 110% overload – 1 min every 5 min.
I_{S2} Short-term current injection available for 3.0s
[2] *Maximum DC current. Actual DC current depends on DC voltage and available AC power*
[3] *DC power is calculated with cosφ = 1, efficiency = 99%*

Ratings: Grid converter (GC) at 690 V AC/1100 V DC

iC7-60SLGC07, 525-690 V AC (640-1100 V DC), IP00/UL Open Type Grid Converter module

Model code	Current ratings [1]					Power ratings [2]		Frame size	Frame with option +AE__
	3 x 525-690 V					690 V AC mains			
	I_N	I_L	I_H	I_S	I_{S2}	P_L	S_L		
	[A]	[A]	[A]	[A]	[A]	[kW]	[kVA]		
iC7-60SLGC07-236AE00F4	241	236	177	354	330	277	283	**AM10L**	**AR10L**
iC7-60SLGC07-300AE00F4	307	300	225	450	420	352	359	**AM10L**	**AR10L**
iC7-60SLGC07-334AE00F4	341	334	250	501	468	392	400	**AM10L**	**AR10L**
iC7-60SLGC07-380AE00F4	388	380	285	570	532	446	455	**AM10L**	**AR10L**
iC7-60SLGC07-425AE00F4	434	425	318	638	595	498	508	**AM12L**	**AR12L**
iC7-60SLGC07-475AE00F4	485	475	356	712,5	665	557	568	**AM12L**	**AR12L**
iC7-60SLGC07-530AE00F4	542	530	397	795	742	621	634	**AM12L**	**AR12L**
iC7-60SLGC07-595AE00F4	608	595	446	892,5	833	697	712	**AM12L**	**AR12L**
iC7-60SLGC07-670AE00F4	684	670	502	1005	938	785	801	**AM12L**	**AR12L**
iC7-60SLGC07-760AE00F4	776	760	570	1140	1064	891	909	**AM12L**	**AR12L**
iC7-60SLGC07-850AE00F4	868	850	637	1275	1190	996	1016	**2xAM12L**	**2xAR12L**
iC7-60SLGC07-945AE00F4	965	945	708	1417,5	1323	1107	1130	**2xAM12L**	**2xAR12L**
iC7-60SLGC07-1040E00F4	1062	1040	780	1560	1456	1219	1243	**2xAM12L**	**2xAR12L**
iC7-60SLGC07-1230E00F4	1256	1230	922	1845	1722	1441	1470	**2xAM12L**	**2xAR12L**
iC7-60SLGC07-1325E00F4	1353	1325	993	1988	1855	1552	1584	**2xAM12L**	**2xAR12L**
iC7-60SLGC07-1500E00F4	1532	1500	1125	2250	2100	1757	1793	**2xAM12L**	**2xAR12L**
iC7-60SLGC07-1700E00F4	1736	1700	1275	2550	2380	1992	2032	**3xAM12L**	**3xAR12L**
iC7-60SLGC07-1800E00F4	1838	1800	1350	2700	2520	2109	2152	**3xAM12L**	**3xAR12L**
iC7-60SLGC07-2000E00F4	2042	2000	1500	3000	2800	2343	2391	**3xAM12L**	**3xAR12L**
iC7-60SLGC07-2250E00F4	2297	2250	1687	3375	3150	2636	2690	**3xAM12L**	**3xAR12L**
iC7-60SLGC07-2500E00F4	2552	2500	1875	3750	3500	2929	2988	**4xAM12L**	**4xAR12L**
iC7-60SLGC07-2650E00F4	2706	2650	1987	3975	3710	3104	3168	**4xAM12L**	**4xAR12L**
iC7-60SLGC07-2940E00F4	3002	2940	2205	4410	4116	3444	3514	**4xAM12L**	**4xAR12L**
iC7-60SLGC07-3120E00F4	3185	3120	2340	4680	4368	3655	3729	**5xAM12L**	**5xAR12L**
iC7-60SLGC07-3600E00F4	3675	3600	2700	5400	5040	4217	4303	**5xAM12L**	**5xAR12L**
iC7-60SLGC07-3900E00F4	3982	3900	2925	5850	5460	4568	4661	**6xAM12L**	**6xAR12L**
iC7-60SLGC07-4320E00F4	4410	4320	3240	6480	6048	5060	5163	**6xAM12L**	**6xAR12L**
iC7-60SLGC07-4750E00F4	4849	4750	3562	7125	6650	5564	5677	**7xAM12L**	**7xAR12L**
iC7-60SLGC07-5040E00F4	5145	5040	3780	7560	7056	5903	6024	**7xAM12L**	**7xAR12L**
iC7-60SLGC07-5400E00F4	5513	5400	4050	8100	7560	6325	6454	**8xAM12L**	**8xAR12L**
iC7-60SLGC07-5750E00F4	5870	5750	4312	8625	8050	6735	6872	**8xAM12L**	**8xAR12L**

[1] Ratings are valid at 1025 V DC nominal voltage
I_N Nominal (thermal) continuous current. Dimensioning can be done according to this current if the process does not require any overloadability
I_L Low overload – 110% overload – 1 min every 5 min.
I_H High overload – 150% overload – 1 min every 5 min.
I_S Short-term current injection available for 1s
I_{S2} Short-term current injection available for 3.0s
[2] DC power is calculated with cosφ = 1, efficiency = 98% and at nominal 1025 V DC voltage

Ratings: Grid converter (GC) at 400 V AC

iC7-60SLGCA5, 380…440 V AC (425-650 V DC), Type Open/IP00 Grid Converter module

Model code	Current ratings [1]					Power ratings [2]		Frame size	Frame with option +AE__
	3 x 380-440 V					400 V AC mains			
	I_N	I_L	I_H	I_{S1}	I_{S2}	P_L	S_L		
	[A]	[A]	[A]	[A]	[A]	[kW]	[kVA]		
iC7-60SLGCA5-271AE00F4	277	271	203	448	421	184	188	**AM10L**	**AR10L**
iC7-60SLGCA5-317AE00F4	324	317	238	524	492	216	220	**AM10L**	**AR10L**
iC7-60SLGCA5-400AE00F4	409	400	300	660	620	272	278	**AM10L**	**AR10L**
iC7-60SLGCA5-460AE00F4	470	460	345	759	713	313	319	**AM10L**	**AR10L**
iC7-60SLGCA5-580AE00F4	593	580	435	957	899	394	402	**AM12L**	**AR12L**
iC7-60SLGCA5-650AE00F4	664	650	488	1073	1008	442	451	**AM12L**	**AR12L**
iC7-60SLGCA5-730AE00F4	746	730	548	1205	1132	496	506	**AM12L**	**AR12L**
iC7-60SLGCA5-816AE00F4	833	816	612	1347	1265	555	566	**AM12L**	**AR12L**
iC7-60SLGCA5-970AE00F4	991	970	728	1601	1504	659	673	**AM12L**	**AR12L**
iC7-60SLGCA5-1210E00F4	1236	1210	908	1997	1876	822	839	**2xAM12L**	**2xAR12L**
iC7-60SLGCA5-1300E00F4	1328	1300	975	2145	2015	883	901	**2xAM12L**	**2xAR12L**
iC7-60SLGCA5-1410E00F4	1440	1410	1058	2327	2186	958	977	**2xAM12L**	**2xAR12L**
iC7-60SLGCA5-1630E00F4	1664	1630	1223	2690	2527	1107	1130	**2xAM12L**	**2xAR12L**
iC7-60SLGCA5-1900E00F4	1940	1900	1425	3135	2945	1291	1317	**2xAM12L**	**2xAR12L**
iC7-60SLGCA5-2080E00F4	2124	2080	1560	3432	3224	1413	1442	**3xAM12L**	**3xAR12L**
iC7-60SLGCA5-2200E00F4	2246	2200	1650	3630	3410	1494	1525	**3xAM12L**	**3xAR12L**
iC7-60SLGCA5-2450E00F4	2501	2450	1838	4043	3798	1664	1698	**3xAM12L**	**3xAR12L**
iC7-60SLGCA5-2800E00F4	2859	2800	2100	4620	4340	1902	1940	**3xAM12L**	**3xAR12L**
iC7-60SLGCA5-3120E00F4	3185	3120	2340	5148	4836	2119	2162	**4xAM12L**	**4xAR12L**
iC7-60SLGCA5-3270E00F4	3338	3270	2453	5396	5069	2221	2266	**4xAM12L**	**4xAR12L**
iC7-60SLGCA5-3720E00F4	3798	3720	2790	6138	5766	2526	2578	**4xAM12L**	**4xAR12L**
iC7-60SLGCA5-4160E00F4	4247	4160	3120	6864	6448	2825	2883	**5xAM12L**	**5xAR12L**
iC7-60SLGCA5-4650E00F4	4747	4650	3488	7673	7208	3158	3222	**5xAM12L**	**5xAR12L**
iC7-60SLGCA5-5200E00F4	5309	5200	3900	8580	8060	3531	3603	**6xAM12L**	**6xAR12L**
iC7-60SLGCA5-5550E00F4	5666	5550	4163	9158	8603	3769	3846	**6xAM12L**	**6xAR12L**
iC7-60SLGCA5-5930E00F4	6054	5930	4448	9785	9192	4027	4109	**7xAM12L**	**7xAR12L**
iC7-60SLGCA5-6450E00F4	6585	6450	4838	10643	9998	4380	4469	**7xAM12L**	**7xAR12L**
iC7-60SLGCA5-6900E00F4	7044	6900	5175	11385	10695	4685	4781	**8xAM12L**	**8xAR12L**
iC7-60SLGCA5-7370E00F4	7524	7370	5528	12161	11424	5004	5107	**8xAM12L**	**8xAR12L**

[1] Main voltage 380…500 V AC (465…830 V DC)
[2] For A5 frames at 380-440 V AC, ratings are valid at 650 V DC. For A5 frames at 440-500 V AC ratings are valid at 742 V DC
I_N Nominal (thermal) continuous current. Dimensioning can be done according to this current if the process does not require any overloadability
I_L Low overloadability current (1/5min) Allows +10% load variation for 1 minute every 5 minutes.
I_H High overloadability current (1/5min) Allows +50% load variation for 1 minute every 5 minutes.
[3] DC power is calculated with cos φ = 1, efficiency = 98%
[4] Incudes LC-filter with the option +AEZ1 and LCL-filter with the option +AEZ3 (net side L-filter separate module)

Ratings: Grid converter (GC) at 500 V AC

iC7-60SL3AA5, 440…500 V AC (425...830 V DC), Type Open/IP00 active front end unit

Model code	Current ratings [1]					Power ratings [3]		Frame size	Frame with option +AE__ [4]
	3 x 440-500 V					500 V AC mains			
	I_N	I_L	I_H	I_{S1}	I_{S2}	P_L	S_L		
	[A]	[A]	[A]	[A]	[A]	[kW]	[kVA]		
iC7-60SLGCA5-271AE00F4	277	271	203	448	421	230	235	**AM10L**	**AR10L**
iC7-60SLGCA5-317AE00F4	324	317	238	524	492	270	275	**AM10L**	**AR10L**
iC7-60SLGCA5-400AE00F4	409	400	300	660	620	340	347	**AM10L**	**AR10L**
iC7-60SLGCA5-460AE00F4	445	435	326	759	713	370	377	**AM10L**	**AR10L**
iC7-60SLGCA5-580AE00F4	593	580	435	957	899	493	503	**AM12L**	**AR12L**
iC7-60SLGCA5-650AE00F4	664	650	488	1073	1008	552	563	**AM12L**	**AR12L**
iC7-60SLGCA5-730AE00F4	746	730	548	1205	1132	620	633	**AM12L**	**AR12L**
iC7-60SLGCA5-816AE00F4	833	816	612	1347	1265	693	707	**AM12L**	**AR12L**
iC7-60SLGCA5-970AE00F4	940	920	690	1601	1504	781	797	**AM12L**	**AR12L**
iC7-60SLGCA5-1210E00F4	1236	1210	908	1997	1876	1027	1048	**2xAM12L**	**2xAR12L**
iC7-60SLGCA5-1300E00F4	1328	1300	975	2145	2015	1104	1126	**2xAM12L**	**2xAR12L**
iC7-60SLGCA5-1410E00F4	1440	1410	1058	2327	2186	1197	1222	**2xAM12L**	**2xAR12L**
iC7-60SLGCA5-1630E00F4	1664	1630	1223	2690	2527	1384	1412	**2xAM12L**	**2xAR12L**
iC7-60SLGCA5-1900E00F4	1838	1800	1350	3135	2945	1528	1559	**2xAM12L**	**2xAR12L**
iC7-60SLGCA5-2080E00F4	2124	2080	1560	3432	3224	1766	1802	**3xAM12L**	**3xAR12L**
iC7-60SLGCA5-2200E00F4	2246	2200	1650	3630	3410	1868	1906	**3xAM12L**	**3xAR12L**
iC7-60SLGCA5-2450E00F4	2501	2450	1838	4043	3798	2080	2122	**3xAM12L**	**3xAR12L**
iC7-60SLGCA5-2800E00F4	2726	2670	2003	4620	4340	2267	2313	**3xAM12L**	**3xAR12L**
iC7-60SLGCA5-3120E00F4	3185	3120	2340	5148	4836	2648	2702	**4xAM12L**	**4xAR12L**
iC7-60SLGCA5-3270E00F4	3338	3270	2453	5396	5069	2776	2832	**4xAM12L**	**4xAR12L**
iC7-60SLGCA5-3720E00F4	3614	3540	2655	6138	5766	3005	3066	**4xAM12L**	**4xAR12L**
iC7-60SLGCA5-4160E00F4	4247	4160	3120	6864	6448	3531	3603	**5xAM12L**	**5xAR12L**
iC7-60SLGCA5-4650E00F4	4502	4410	3308	7673	7208	3743	3820	**5xAM12L**	**5xAR12L**
iC7-60SLGCA5-5200E00F4	5002	4900	3675	8580	8060	4159	4244	**6xAM12L**	**6xAR12L**
iC7-60SLGCA5-5550E00F4	5390	5280	3960	9158	8603	4482	4573	**6xAM12L**	**6xAR12L**
iC7-60SLGCA5-5930E00F4	5717	5600	4200	9785	9192	4753	4850	**7xAM12L**	**7xAR12L**
iC7-60SLGCA5-6450E00F4	6227	6100	4575	10643	9998	5178	5283	**7xAM12L**	**7xAR12L**
iC7-60SLGCA5-6900E00F4	6534	6400	4800	11385	10695	5432	5543	**8xAM12L**	**8xAR12L**
iC7-60SLGCA5-7370E00F4	7115	6970	5228	12161	11424	5916	6037	**8xAM12L**	**8xAR12L**

[1] Main voltage 380…500 V AC (465…830 V DC)
[2] For A5 frames at 380-440 V AC, ratings are valid at 650 V DC. For A5 frames at 440-500 V AC ratings are valid at 742 V DC
I_N Nominal (thermal) continuous current. Dimensioning can be done according to this current if the process does not require any overloadability
I_L Low overloadability current (1/5min) Allows +10% load variation for 1 minute every 5 minutes.
I_H High overloadability current (1/5min) Allows +50% load variation for 1 minute every 5 minutes.
[3] DC power is calculated with cos φ = 1, efficiency = 98%
[4] Incudes LC-filter with the option +AEZ1 and LCL-filter with the option +AEZ3 (net side L-filter separate module)

iC7-Hybrid DC/DC Converter

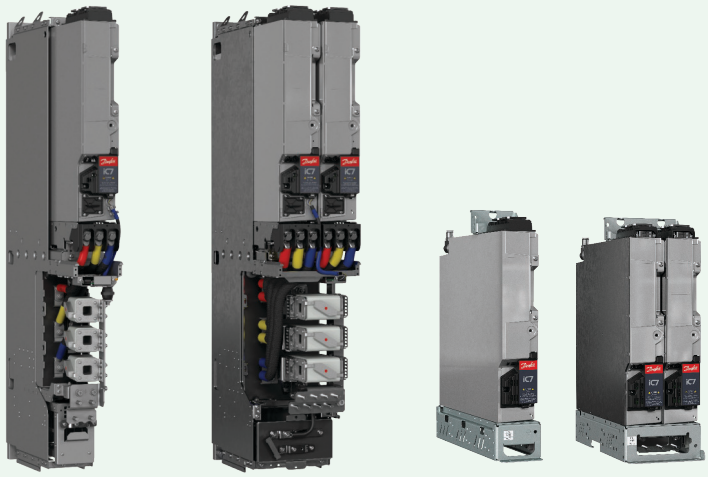

Tap in to the benefits of electrification with the DC/DC Converter

- DC/DC Converter is a bi-directional power converter enabling interconnection of two (DC) systems having different voltage levels
- Energy storage with wide voltage range can be connected to a stable DC bus
- Ideal for high-power battery, super capacitor, or fuel cell applications

Ratings

- 300-3600 A I_L, +10% overload 1 min/5 min
- 640-1100 V DC bus (07)
- 465-830 V DC bus (B5)
- DC Source voltage range 3-100% of DC bus voltage. Full control performance 3-97% of DC bus voltage
- DC source current ripple (typical):
  – DR10L < 1% RMS (typical)
  – DR12L < 0.5% RMS (typical))
- Ambient temperature 60 °C at I_N
- Coolant temperature 45 °C at I_N, with the exception of 38 °C at I_N for current ratings 1200 A, 2400 A, 3600 A

Highlights

- Compact and lightweight thanks to integration of modern filter technology and fuses
- Same mechanical footprint and integration as GC.
- Meets strict DC power quality requirements
- Robust and reliable in varying ambient conditions
- Designed for enclosure integration and quick serviceability

DC/DC Converter control

- Fast primary control ensures power system stability and streamlined power management
- Flexible control modes to optimize system-level cost and time to market
  – DC-bus voltage reference
  – Source voltage reference
  – Source power and current references
  – Current and voltage limit controllers
  – Smooth transition between control modes during run state
- Able to maintain stable DC bus voltage even when other power generation goes offline – added redundancy on top of the benefits of hybridization and electrification
- Black start capability

Ratings: iC7-Hybrid DC/DC Converter (DC) at 1025 V DC

iC7-60SLDC07, 640-1100 V DC bus, IP00/UL Open Type DC/DC Converter

Model code	DC current			DC power	Frame	Frame with option +AE__
				1000..250 $V_{DC\ source}$		
	I_N	I_L	I_H	$P_{L\text{-}typ}$		
	[A]	[A]	[A]	[kW]		
iC7-60SLDC07-300AE00F4	307	300	225	300..75	**DM10L**	**DR10L**
iC7-60SLDC07-360AE00F4	368	360	270	360..90	**DM10L**	**DR10L**
iC7-60SLDC07-420AE00F4	429	420	315	420..105	**DM10L**	**DR10L**
iC7-60SLDC07-480AE00F4	490	480	360	480..120	**DM10L**	**DR10L**
iC7-60SLDC07-570AE00F4	582	570	428	570..142	**DM10L**	**DR10L**
iC7-60SLDC07-720AE00F4	735	720	540	720..180	**DM12L**	**DR12L**
iC7-60SLDC07-840AE00F4	858	840	630	840..210	**DM12L**	**DR12L**
iC7-60SLDC07-960AE00F4	980	960	720	960..240	**DM12L**	**DR12L**
iC7-60SLDC07-1080E00F4	1103	1080	810	1080..270	**DM12L**	**DR12L**
iC7-60SLDC07-1200E00F4	1225	1200	900	1200..300	**DM12L**	**DR12L**
iC7-60SLDC07-1440E00F4	1470	1440	1080	1440..360	**2xDM12L**	**2xDR12L**
iC7-60SLDC07-1680E00F4	1715	1680	1260	1680..420	**2xDM12L**	**2xDR12L**
iC7-60SLDC07-1920E00F4	1960	1920	1440	1920..480	**2xDM12L**	**2xDR12L**
iC7-60SLDC07-2160E00F4	2205	2160	1620	2160..540	**2xDM12L**	**2xDR12L**
iC7-60SLDC07-2400E00F4	2450	2400	1800	2400..600	**2xDM12L**	**2xDR12L**
iC7-60SLDC07-2880E00F4	2940	2880	2160	2880..720	**3xDM12L**	**3xDR12L**
iC7-60SLDC07-3240E00F4	3308	3240	2430	3240..810	**3xDM12L**	**3xDR12L**
iC7-60SLDC07-3600E00F4	3675	3600	2700	3600..900	**3xDM12L**	**3xDR12L**

Ratings are valid at 1025 V nominal DC bus voltage
I_N Nominal (thermal) current. Dimensioning according I_N if the process does not require overloadability
I_L Low overload – 110% overload – 1 min every 5 min
I_H High overload – 150% overload for 1 min every 5 min
$P_{L\text{-}TYP}$ is the DC source power with the stated source voltage and I_L current
DC bus current rating is equal to DC source current ratings (DC current)
Source voltage range 3..100% of DC bus voltage. Full control performance 3..97% of DC bus voltage

Ratings: iC7-Hybrid DC/DC Converter (DC) at 800 V DC

iC7-60SLDCB5, 425-830 V DC bus, IP00/UL Open Type DC/DC Converter

Model code	DC current			DC power	Frame	Frame with option +AE__
				700..250 $V_{DC\ source}$		
	I_N	I_L	I_H	$P_{L\text{-}typ}$		
	[A]	[A]	[A]	[kW]		
iC7-60SLDCB5-300AE00F4	307	300	225	210..75	**DM10L**	**DR10L**
iC7-60SLDCB5-360AE00F4	368	360	270	252..90	**DM10L**	**DR10L**
iC7-60SLDCB5-420AE00F4	429	420	315	294..105	**DM10L**	**DR10L**
iC7-60SLDCB5-480AE00F4	490	480	360	336..120	**DM10L**	**DR10L**
iC7-60SLDCB5-570AE00F4	582	570	428	399..143	**DM10L**	**DR10L**
iC7-60SLDCB5-720AE00F4	735	720	540	504..180	**DM12L**	**DR12L**
iC7-60SLDCB5-840AE00F4	858	840	630	588..210	**DM12L**	**DR12L**
iC7-60SLDCB5-960AE00F4	980	960	720	672..240	**DM12L**	**DR12L**
iC7-60SLDCB5-1080E00F4	1103	1080	810	756..270	**DM12L**	**DR12L**
iC7-60SLDCB5-1200E00F4	1225	1200	900	840..300	**DM12L**	**DR12L**
iC7-60SLDCB5-1440E00F4	1470	1440	1080	1008..360	**2xDM12L**	**2xDR12L**
iC7-60SLDCB5-1680E00F4	1715	1680	1260	1176..420	**2xDM12L**	**2xDR12L**
iC7-60SLDCB5-1920E00F4	1960	1920	1440	1344..480	**2xDM12L**	**2xDR12L**
iC7-60SLDCB5-2160E00F4	2205	2160	1620	1512..540	**2xDM12L**	**2xDR12L**
iC7-60SLDCB5-2400E00F4	2450	2400	1800	1680..600	**2xDM12L**	**2xDR12L**
iC7-60SLDCB5-2880E00F4	2940	2880	2160	2016..720	**3xDM12L**	**3xDR12L**
iC7-60SLDCB5-3240E00F4	3308	3240	2430	2268..810	**3xDM12L**	**3xDR12L**
iC7-60SLDCB5-3600E00F4	3675	3600	2700	2520..900	**3xDM12L**	**3xDR12L**

Ratings are valid at 800 V DC voltage
I_N Nominal (thermal) current. Dimensioning according I_N if the process does not require overloadability
I_L Low overload – 110% overload – 1 min every 5 min
I_H High overload – 150% overload for 1 min every 5 min
$P_{L\text{-}TYP}$ is the DC source power with the stated source voltage and I_L current
DC bus current rating is equal to DC source current ratings (DC current)
Source voltage range 3..100% of DC bus voltage. Full control performance 3..97% of DC bus voltage

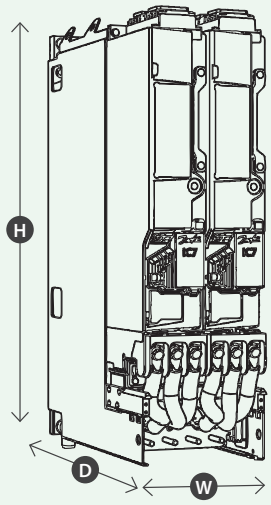

Dimensions and weight: GC and DC/DC modules

Module type		Grid Converter with integration unit		DC/DC Converter with integration unit	
Frame		**AR10L**	**AR12L**	**DR10L**	**DR12L**
[mm]	Width	140	235	140	235
	Height	1295	1295	1295	1295
	Depth	566	566	566	566
[kg]	Weight [1]	138	230	130	230
[in]	Width	5.5	9.3	5.5	9.3
	Height	51	51	51	51
	Depth	22.3	22.3	22.3	22.3
[lb]	Weight [1]	304	507	287	507

[1] *Weight includes integration unit with these filters installed:*
AR10L, AR12L with LC filter (+AEZ1)
DR10L, DR12L with DC/DC filter (+AED1)

Danfoss offers an extensive range of inverter modules for power generation applications. Use these inverter units for interfacing any type of rotating IM, PM or synchronous low-voltage generator.

To learn more, check the iC7-Marine and iC7-Hybrid Selection Guide

Highly compact cooling unit



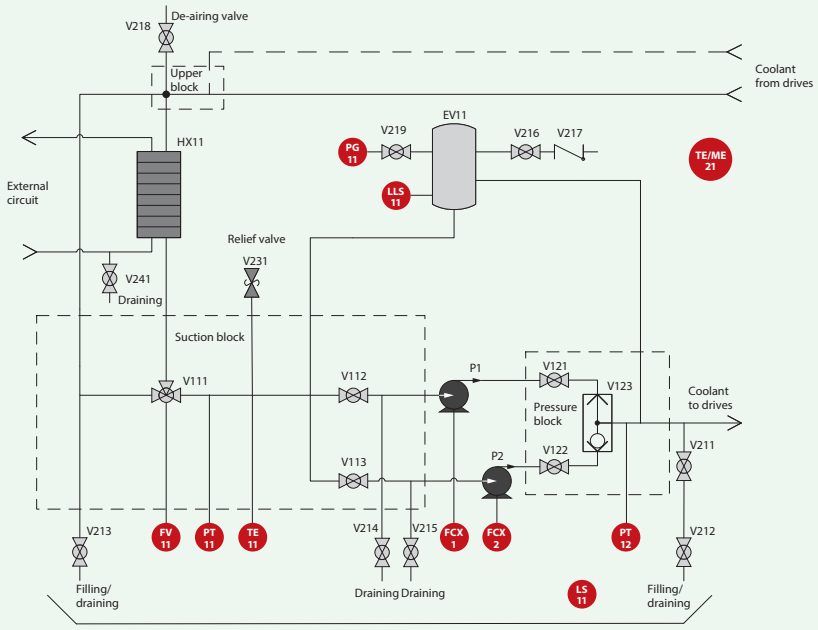

At the heart of iC7 liquid-cooled technology is the cooling unit. The cooling unit is service-friendly despite its extremely compact design, making it fast and easy to work with.
The cooling unit gives you especially easy access to the pump, as well as providing pump shut-off valves.

- Liquid cooling temperature control with integrated 3-way valve
- Extensive sensor package with humidity and ambient temperature measurement
- Cooling unit supply distance: 15-25 m, optionally up to 40 m
- Drive-side temperature control with 3-way valve and actuator

Key specifications: Cooling unit	
System pressure	Customer side: max 1000 kPa • Drive side working pressure: 50-350 kPA, maximum 600 kPa
Cooling	Ambient operating temperature: -15-55 °C • Coolant temperature: -15-38 °C (Ith) (nominal); 38-55 °C with limited performance
Sensor measurements on the drive side	Pressure • Flow (pressure sensor-based) • Temperature • Leakage detection • Condensation (humidity/ambient temperature sensor-based)
Compatibility	Compatible with diverse Ethernetbased fieldbuses
Type approvals	DNV
Optional extras	Protection rating IP23 (without enclosure) and IP54 with enclosure • Double/redundant pump • Coolant connectors positioned on left or right side of the cooling unit

Cooling unit

Model code	Cooling power [kW]	Coolant flow [l/min]	Pump quantity	Dimensions IP23 enclosures W x H x D [mm]	Dimensions IP54 enclosures W x H x D [mm]
iC7-60SLLQxx-0076…	76	190	1 and 2	300/500 x 1900 x 550	408/608 x 2060 x 608
iC7-60SLLQxx-0152…	152	360	1 and 2	300/500 x 1900 x 550	408/608 x 2060 x 608

Explore our solutions
danfoss.com



Your ambition. Our drive. Meet iC7 series

iC7-Automation | iC7-Marine | iC7-Hybrid | iC7-HVACR | iC7-Aqua

Imagine versatile and highly secure motor control and power conversion. The iC7 series puts this capability securely in your hands. Intensely powerful and compact variable frequency drives and converters built to optimize a vast range of systems, while giving you the flexibility to distribute intelligence the way you want.
Paving the way for new ambitions, where intelligent, efficient, and connected systems are the new reality.

Any information, including, but not limited to information on selection of product, its application or use, product design, weight, dimensions, capacity or any other technical data in product manuals, catalogues descriptions, advertisements, etc. and whether made available in writing, orally, electronically, online or via download, shall be considered informative, and is only binding if and to the extent, explicit reference is made in a quotation or order confirmation. Danfoss cannot accept any responsibility for possible errors in catalogues, brochures, videos and other material. Danfoss reserves the right to alter its products without notice. This also applies to products ordered but not delivered provided that such alterations can be made without changes to form, fit or function of the product. All trademarks in this material are property of Danfoss A/S or Danfoss group companies. Danfoss and the Danfoss logo are trademarks of Danfoss A/S. All rights reserved.

Some functionalities listed in this fact sheet are for future implementation

Danfoss Drives A/S
Ulsnaes 1
6300 Graasten
Denmark
CVR reg. no. 19883876

© Danfoss 2026.07