High-Pressure Solutions for RO

Guide to APP Pumps and Energy Recovery Devices

© 2026 Danfoss

Energy-efficient pumps and ERDs for a low-carbon future

As global water scarcity intensifies and the need for fresh water grows, industries and communities alike must produce and reuse more water through reverse osmosis processes. At the same time, financial and decarbonization goals demand solutions that are increasingly energy efficient.

Danfoss is committed to meet these challenges through innovative high-pressure pumps and energy recovery devices (ERDs). Designed for plants large and small – and engineered for demanding applications ranging from seawater reverse osmosis (SWRO) to brine mining – our growing portfolio is trusted worldwide to deliver reliable, energy-efficient performance.

Our global footprint

Single and multi-stage processes

See how the Danfoss range of pumps and ERDs delivers efficient pressure across single-stage processes like SWRO and multi-stage processes including ZLD and brine mining.

Scalable systems

Learn how scalable, modular design offers greater operational flexibility, improved reliability, and easier maintenance for critical RO applications.

APP high-pressure pumps

Explore our portfolio of energy-efficient APP positive displacement pumps, available in a variety sizes and pressure ratings for a wide range of RO applications.

iSave ERDs

See how active iSave ERDs combine three key components in one compact unit an isobaric pressure exchanger, a booster pump, and a motor – to save energy, space and maintenance.

MPE 70 ERD

Discover how the world's first active ERDs designed for medium and large SWRO plants integrates an isobaric pressure exchanger and a low-voltage motor.

Gen-Save ERDs

Learn how Gen-Save extends energy recovery to high-TDS RO up-concentration processes, reducing energy consumption while maintaining complete hydraulic separation between process streams.

© 2026 Danfoss

Energy-efficient SWRO made simple

From the smallest marine and offshore plants to containerized, medium and large land-based plants, Danfoss makes single-stage SWRO simple with a wide range of APP pumps and either iSave or MPE 70 ERDs.

Single stage SWRO with iSave

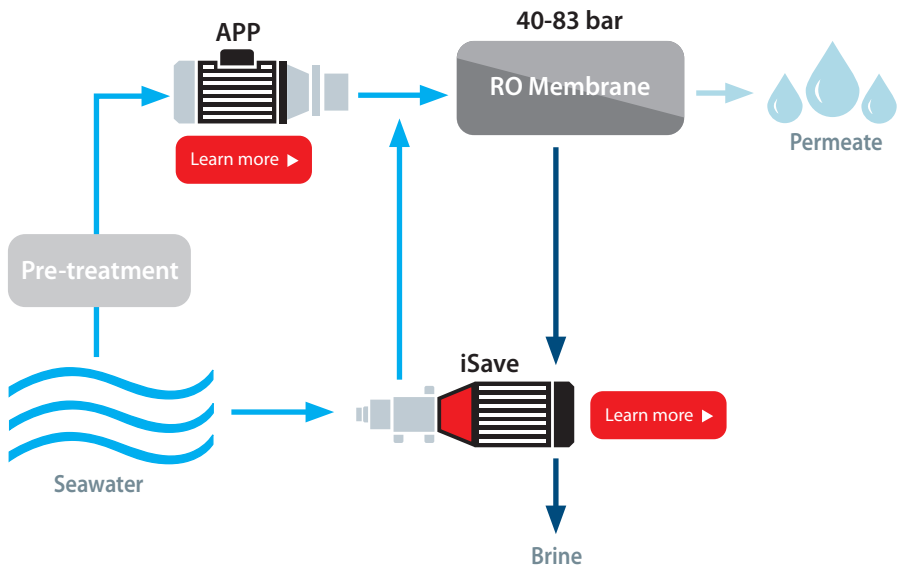

Single stage SWRO with MPE 70

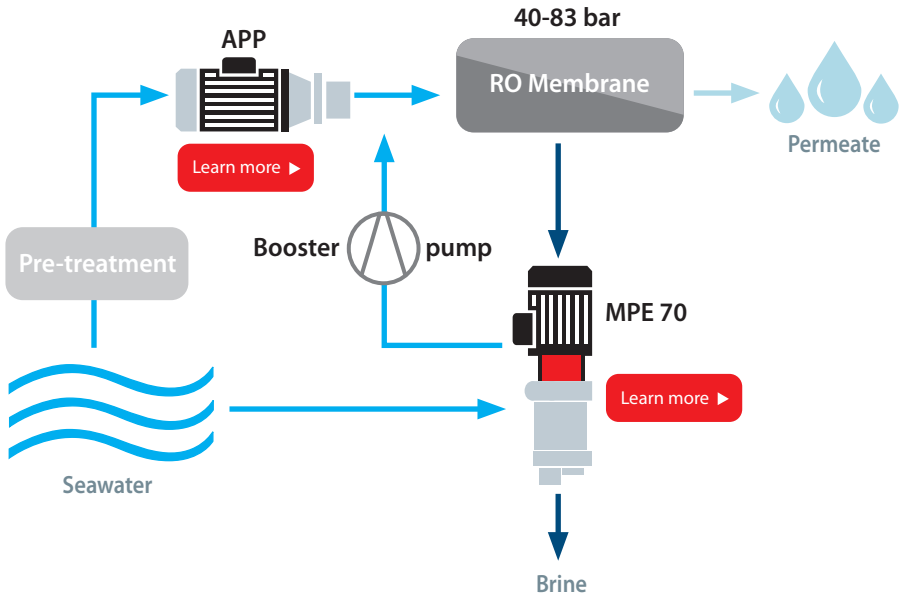

Color key:
- Seawater
- Permeate
- Brine/Concentrate

© 2026 Danfoss

One high-pressure system for demanding multi-stage RO applications

From ZLD, brine concentration to brine mining, Danfoss delivers compact, energy-efficient solutions with a growing portfolio of APP pumps and ERDs engineered to handle extreme corrosiveness and variable flow and pressure demands.

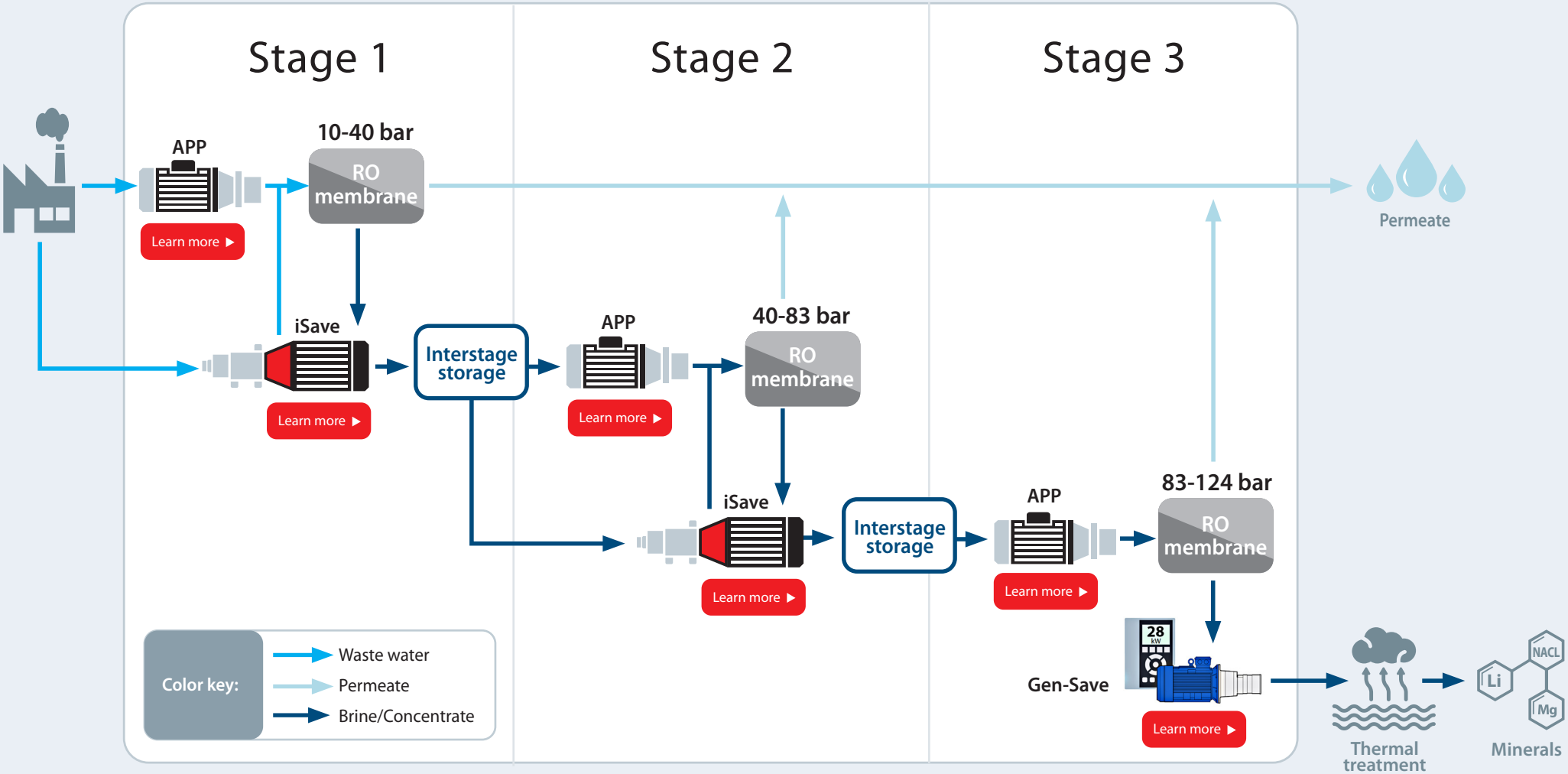

© 2026 Danfoss

Parallel means powerful
What are parallel pump arrays?

Parallel pump arrays consist of two or more pumps operating side by side to handle varying system demands. Rather than relying on a single large centrifugal pump to deliver full flow and pressure, arrays of APP positive displacement pumps are installed in parallel to share the load.

This setup allows each pump to run individually or in coordinated stages, depending on real-time flow and pressure requirements. A central control system manages pump activation to ensure optimal performance at all times.

By distributing demand across multiple pumps, parallel pump arrays provide a modular, flexible approach that better adapts to varying system dynamics. This is particularly effective in high-pressure applications, such as SWRO and industrial wastewater treatment, where flow can vary significantly over time.

What are the benefits of parallel APP pump arrays?

Recovery

Unmatched energy efficiency – up to 92%

APP pumps are inherently more efficient than centrifugal pumps. Whether in single or parallel configurations, APP pumps stay close to their optimal operating point across a wide range of flows and pressures. This ensures consistently low energy consumption even under variable conditions.

Over a typical 20–25 year plant lifetime, energy costs account for more than 95% of total pump ownership cost. By maintaining industry-leading efficiency throughout part-load and full-load operation, parallel APP systems deliver dramatic long-term savings compared to one-pump centrifugal systems.

Redundancy

Redundancy and simple maintenance = better uptime

Parallel pumping builds-in redundancy: If one parallel pump is offline, others keep running to prevent system shutdown. In addition, compared to centrifugal pumps, APP pumps are simple to service on-site, often within hours, keeping downtime and external support to a minimum.

Scalability

Flexible, scalable operation

Individual pumps in parallel arrays start and stop based on real-time demand, making parallel pumping ideal for systems with diurnal, seasonal, or fluctuating feed conditions – and easy to scale as capacity needs grow.

Compact

Compact design and flexible orientation

APP not only are considerably more compact than centrifugal pumps – they also offer full orientation flexibility. Units can be installed horizontally, vertically or stacked (one pump above another) - allowing them to fit into constrained or unconventional spaces with ease. APP systems adapt to your plant layout – not the other way around.

Low-voltage

Low-voltage motors and drives

APP pump arrays use low-voltage (LV) motors and VFDs rather than a single large medium-voltage pump and drive. This improves efficiency, simplifies maintenance, and reduces VFD-related CAPEX. The modular design also provides greater flexibility, allowing operators to install only the number of LV VFDs required to match plant flow.

© 2026 Danfoss

APP high-pressure pumps: Designed for efficiency. Built for performance.

High-pressure positive displacement pumps are ideal for reverse osmosis, delivering consistent, non-pulsating flow regardless of system pressure. Axial piston pumps (APP), in particular, offer clear advantages in challenging operating environments. Their innovative design ensures outstanding energy efficiency up to 92%, precise pressure control, and dependable performance at extreme pressures.

Constructed from advanced corrosion- and wear-resistant materials, Danfoss APP pumps are built to withstand aggressive conditions over the long term. Energy efficient, compact, and meticulously manufactured for continuous duty, Danfoss APP pumps power RO systems that meet the highest standards for reliability, total cost of ownership, and long-term decarbonization goals.

See how axial piston pumps work

One flexible pump platform for multiple RO applications, flow and pressure ranges

Train size	10-40 bar (145-580 psi)	40-83 bar (580-1200 psi)	83-124 bar (1200-1800 psi)
14–100 m³/d (4K–26K gpd)	✓	✓	—
100–250 m³/d (26K–66K gpd)	✓	✓	—
250–500 m³/d (66K–132K gpd)	✓	✓	✓
500–1100 m³/d (132K–291K gpd)	✓	✓	✓
1100–2200 m³/d (291K–581K gpd)	✓	✓	✓
2200–10000 m³/d (581K–2642K gpd	✓	✓	✓

Get help in dimensioning APP pumps for your project

Energy efficient

Consistent energy efficiency, up to 92%, maximizing cost savings

Danfoss APP pumps deliver uniquely high volumetric efficiency and precise pressure control, reducing energy consumption across the entire high-pressure stage of RO systems. This outstanding energy efficiency remains constant regardless of variations in pressure and flow.

For operators aiming to maximize financial returns and minimize environmental impact, these incremental savings add up – dramatically lowering both total cost of ownership and carbon emissions over a plant's lifetime.

Reliable

Simple and onsite maintenance increasing uptime

Engineered for durability, Danfoss APP pumps use advanced materials such as Super Duplex, Duplex, and ceramics. With oil-free lubrication and fewer moving to wear out and fail, they enable long service intervals and simple, on-site maintenance to minimize downtime.

Even in harsh, highly corrosive environments, they deliver consistent performance with less intervention, ensuring reliable operation and lower maintenance costs.

Compact

More water produced per m³

Lightweight and space-saving, Danfoss APP pumps fit easily into tight layouts and multi-train configurations. Their small footprint allows for flexible system design – ideal for retro-fits, modular builds, and containerized solutions – without compromising performance.

Despite their size, they deliver powerful, stable, non-pulsating flow, making them a smart choice wherever limited space and reliable efficiency must go hand in hand.

© 2026 Danfoss

APP 0.6–3.5

On a yacht, ship, or remote island, space is limited and service access is often constrained. In these environments, compact and energy-efficient APP high-pressure pumps with long service intervals are essential for dependable freshwater production. Designed for continuous duty in harsh marine conditions, these pumps support SWRO systems in small installations where reliability, simplicity, and low-maintenance requirements are critical.

Train size – 14 to 100 m³/d		
Pumps	**APP 0.6–1.0**	**APP 1.5–3.5**
Flow m³/d	14-24	24-100
Flow gpd	3.7K-6K	9K-26K
Pressure (bar)	10-83	
Pressure (psi)	145-1200	
Material	Super Duplex/Duplex	

Visit our product store

Case Story

Remote reliability: More than 23,000 hours before the first service check

On remote Elbow Cay in the Bahamas, a Danfoss APP pump demonstrated long-term reliability by operating far beyond its guaranteed first service interval, delivering dependable performance in a hard-to-reach island location.

The challenge

In the isolated Abacos Islands, service logistics are costly and time-consuming, as technicians must travel by air or sea. For a local SWRO installation, the high-pressure pump needed to operate reliably for extended periods with minimal maintenance. At the same time, the island's reliance on diesel-generated power made energy efficiency a critical consideration.

The solution

A Danfoss APP 1.8 high-pressure pump, guaranteed for 8,000 hours before its first service check, was selected for its long service intervals and high energy efficiency. Its compact design and low maintenance requirements supported stable operation in a remote setting, while efficient performance helped limit energy consumption in a diesel-powered system.

The results

The pump operated for approximately 23,000 hours before its first service inspection, nearly three times longer than the guaranteed interval. Only limited wear was observed, and standard service components were replaced. Following the service, the pump continued operation, maintaining reliable and energy-efficient performance under demanding island conditions.

Read the case story

© 2026 Danfoss

APP 5.1–10.2

In hotels and resorts, APP high-pressure pumps are commonly used in seawater reverse osmosis systems to produce freshwater efficiently under continuous operation. In zero liquid discharge installations, they support wastewater treatment and reuse where reliability and stable performance are essential. Across both applications, high energy efficiency, compact design, oil-free operation, and long service intervals help reduce operating costs and maintenance demands in systems designed to run around the clock.

Train size – 100 to 200 m³/d	
Pumps	**APP 5.1-10.2**
Flow m³/d	41-250
Flow gpd	11K-66K
Pressure (bar)	10-83
Pressure (psi)	145-1200
Material	Super Duplex/Duplex

Visit our product store

Case Story

More than a decade of energy-efficient operation without maintenance

Installed on a remote island in the San Juan archipelago, a small SWRO plant equipped with an APP high-pressure pump operated for more than a decade without any pump maintenance. Originally designed for a single vacation property, the plant now supplies freshwater to several adjacent properties.

The challenge

The remote island has high energy costs, and its location limits access to service personnel and spare parts. The plant was intended for intermittent use, making reliability and low maintenance essential to avoid costly service visits and unplanned downtime.

The solution

An APP 7.2 high-pressure pump was selected for its long service intervals, low energy consumption, and compact design. The plant was designed and built in-house, with smooth pressure control and robust materials to support stable, long-term operation.

The results

The pump operated continuously for more than ten years without any maintenance. Performance remained stable, with no leakage or pressure loss observed. Low pulsation reduced stress on system components, contributing to long membrane life and consistently low total cost of ownership.

Read the case story

© 2026 Danfoss

APP 11–22

In small SWRO plants and compact zero liquid discharge systems, APP high-pressure pumps must balance performance with space efficiency and low operating costs. These installations typically operate continuously, making energy efficiency and long service intervals central to predictable performance. With a compact footprint and oil-free design, these APP pumps enable reliable freshwater production and water reuse where downtime, maintenance access, and life-cycle energy consumption must be tightly controlled.

Train size – 250 to 500 m³/d	
Pumps	**APP 11-22**
Flow m³/d	150-500
Flow gpd	40K-132K
Pressure (bar)	10-83
Pressure (psi)	145-1200
Material	Super Duplex/Duplex

Visit our product store

Case Story

From lava seawater to value-added water production

On Jeju Island, naturally filtered lava seawater is processed into potable and industrial-grade water through a high-efficiency SWRO plant. APP high-pressure pumps support reliable, energy-efficient, and contamination-free operation for a range of value-added applications.

The challenge

The SWRO plant was required to deliver high energy efficiency, low maintenance, and absolute water purity. Electricity costs were expected to dominate lifetime operating expenses, while the remote location increased the importance of reliability and minimal service needs.

The solution

APP 13 high-pressure pumps were selected based on proven, oil-free operation that eliminates the risk of lubricant contamination – and reliably energy-efficient axial piston design. iSave 21 energy recovery devices and smooth pressure control supported stable and energy-efficient system performance.

The results

Since commissioning, the plant has operated reliably, delivering high-purity water for bottled water, cosmetics, pharmaceuticals, and agriculture. High energy efficiency, oil-free operation, and low maintenance requirements have established the facility as a long-term industrial asset.

Read the case story

© 2026 Danfoss

APP 21–46

Containerized water treatment systems place strict demands on footprint, efficiency, and serviceability. In these installations, APP high-pressure pumps must deliver stable performance under continuous operation while keeping maintenance and energy consumption low. Compact dimensions, long service intervals, and high energy efficiency make APP pumps well-suited for containerized SWRO and zero liquid discharge systems where standardized layouts and reliable operation are fundamental.

Train size – 500 to 1100 m³/d	
Pumps	**APP 21-46**
Flow m³/d	295-1104
Flow gpd	78K-292K
Pressure (bar)	10-124
Pressure (psi)	145-1800
Material	Super Duplex/Duplex and Ceramics

Visit our product store

Case Story

Ceramic APP pumps help power modular SWRO solution for Jamaican resorts

To serve three resort locations in Jamaica, Spanish water treatment specialist Gefico developed a modular SWRO concept built around Danfoss ceramic APP pumps and iSave energy recovery devices. The result is a flexible solution that can be deployed in containers or on skids while delivering high efficiency and reliability.

The challenge

Gefico's customer needed SWRO plants for three resorts: two containerized systems producing 1,500 m^3/day and one skid-mounted system producing 2,250 m^3/day. The plants required a compact footprint, remote monitoring, resistance to challenging seawater conditions, and low operating costs.

The solution

Gefico standardized the design around a 750 m^3/day train. Seven trains were built using Danfoss APP 38 ceramic high-pressure pumps and iSave 40 ERDs. The modular approach simplified engineering, enabled scalability, standardized maintenance, and provided built-in redundancy.

The results

The first plant was commissioned less than 12 months after project launch. The compact modular design met the space constraints of both containerized and skid-mounted installations while achieving a specific energy consumption for the RO loop of just 2.36 kWh/m^3. The ceramic APP pumps provide added durability, long service intervals, and reliable operation in remote locations where minimizing maintenance and downtime is essential.

Read the case story

© 2026 Danfoss

APP 53–92

Medium to large SWRO and zero liquid discharge installations require APP high-pressure pumps that operate efficiently at higher capacities without compromising reliability. Whether deployed in containerized solutions or land-based plants, energy efficiency plays a key role in controlling operating costs over plant lifetime. Designed for continuous operation with long service intervals, these APP pumps support stable and low-maintenance operation in demanding, high-throughput water treatment systems.

Train size – 1100 to 2200 m³/d	
Pumps	**APP 53-92**
Flow m³/d	576-2208
Flow gpd	152K-583K
Pressure (bar)	10-83
Pressure (psi)	145-1200
Material	Super Duplex/Duplex and Ceramics

Visit our product store

For train sizes above 2200 m³/d APP pumps can be coupled.

Learn more

Case Story

Setting a new Guinness World Records benchmark for SWRO energy efficiency

In the Canary Islands, a fully containerized SWRO plant was developed to demonstrate the lowest possible energy consumption using commercially available technology. The DESALRO® 2.0 project resulted in a new Guinness World Records title for desalination energy efficiency.

The challenge

The objective was to achieve a specific energy consumption below 2.0 kWh per cubic meter in a practical, scalable SWRO plant. Strict limits on footprint and energy use required exceptional efficiency in the high-pressure reverse osmosis stage.

The solution

Two APP 65 pumps installed in parallel, isobaric energy recovery devices, and an optimized hydraulic design were specified. APP high-pressure pumps were selected for their ability to maintain high energy efficiency across varying operating conditions.

The results

The plant achieved a verified specific energy consumption of 1.794 kWh per cubic meter, earning a Guinness World Records title. The result establishes a new benchmark for energy-efficient SWRO in a fully operational, real-world installation that established a utility model for future plants.

Read the case story

© 2026 Danfoss

Danfoss Energy Recovery Devices

Danfoss energy recovery devices (ERDs) reduce energy consumption in reverse osmosis (RO) systems by recovering hydraulic energy from the high-pressure reject stream and reusing it within the RO process.

The Danfoss ERD portfolio consists of two complementary technology platforms: active isobaric ERDs (iSave and MPE 70) and zero mixing electro-hydraulic ERDs (Gen-Save®).

iSave®

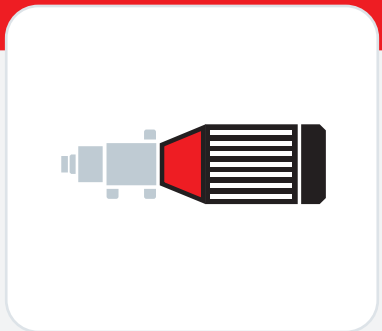

Active isobaric
(3-in-1)

Up to 94% energy efficiency

Compact, active ERDs for small-medium SWRO, marine, water reuse and brine mining

MPE 70

Active isobaric
(2-in-1)

Up to 98.5% energy efficiency

Active ERDs for medium-large, multi-train SWRO systems

Gen-Save®

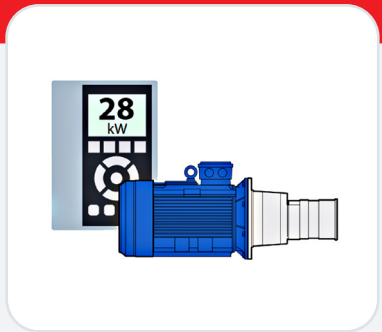

Electro-hydraulic
(APM + VFD)

Up to 80% energy efficiency

High-TDS industrial wastewater up-concentration RO for water reuse and brine mining applications

Check out our ERDs

© 2026 Danfoss

iSave® & MPE 70: Active isobaric ERDs for smarter energy recovery

Active isobaric ERDs redefine energy recovery by adding precise motor control to a proven principle. Unlike passive devices, Danfoss iSave and MPE 70 actively control rotor speed, eliminating overspin and enabling safe operation at maximum flow rates with no gap between nominal and actual capacity.

Active ERD control reduces internal mixing, lowering salinity increase and improving overall system efficiency. At the same time, it ensures stable performance under variable conditions and mitigates biofouling through continuous rotation and reliable startups.

The result is higher usable capacity, improved efficiency, and greater operational flexibility – all while enabling system builders and operators to implement advanced monitoring, optimization, and maintenance strategies.

Integrated, active isobaric ERDs: More functionality, less complexity

iSave®: 3-in-1 integration

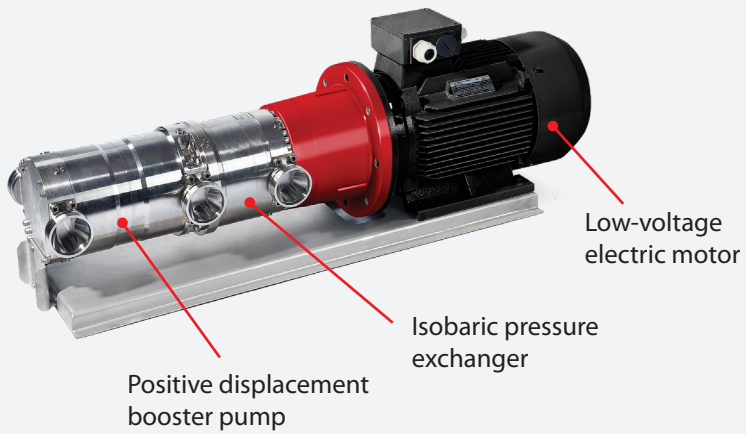

MPE 70: 2-in-1 integration

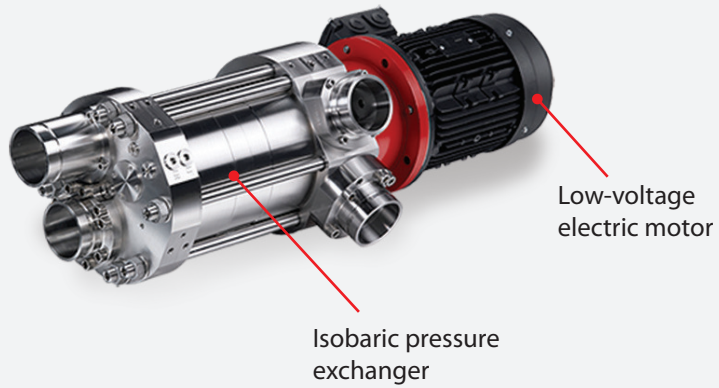

© 2026 Danfoss

iSave® energy recovery devices: Active isobaric ERDs for compact, energy-efficient systems

iSave isobaric energy recovery devices are engineered to deliver compact, high-performance energy recovery in modern SWRO and wastewater treatment systems. Suitable for a wide range of applications – from containerized and marine installations to aquaculture and water reuse – iSave enables flexible system design without added complexity.

By integrating key components into a single unit and enabling active control of the energy recovery process, iSave goes beyond conventional ERDs. It simplifies system architecture, ensures stable operation under variable conditions, and maximizes energy efficiency – helping operators reduce footprint, improve performance, and lower operating costs across diverse system configurations.

iSave ERDs				
	iSave 21 Plus	iSave 40	iSave 50	iSave 70
Flow (m³/d)	144-528	504-984	1000-1250	1200-1680
Flow (gpd)	37K-138K	132K-260K	265K-328K	317K-444K
Pressure (bar)	15-83	20-83	40-83	40-83
Pressure (psi)	217-1200	290-1200	580-1200	580-1200
Material	Super duplex/ Duplex	Super duplex/ Duplex	Super duplex/ Duplex	Super duplex/ Duplex

Visit our product store

Get help in dimensioning iSaves for your project

Energy efficient

High-efficiency energy recovery for lower OPEX and emissions

With energy recovery efficiency up to 94%, active iSave isobaric ERDs significantly reduce overall system energy consumption. This can lower energy use by up to 60% in SWRO applications, cutting operating costs and emissions. High, consistent efficiency across the operating range helps operators maximize energy savings while maintaining stable operation and reliable system performance.

Active

Active control for stable, full-capacity operation

Active iSave ERDs use motor-controlled rotor speed to ensure stable operation across varying flow and pressure conditions. This eliminates overspin and enables safe operation at maximum flow with full usable capacity. Active control also reduces internal mixing and salinity increase, while continuous rotation helps limit biofouling, supporting consistent performance and more reliable long-term operation.

Compact

Compact, simplified design for reduced footprint and complexity

iSave's integrated 3-in-1 design combines isobaric pressure exchanger, motor, and booster pump in a single unit, reducing system footprint and layout complexity. With fewer components, no need for motor and pump alignment, and less piping, installation is faster and more straightforward. The compact architecture supports containerized, modular, and marine systems, while reducing system design complexity and simplifying overall system integration.

© 2026 Danfoss

Compact, integrated energy recovery for demanding applications

The iSave® range of active, isobaric ERDs is engineered for applications where space, efficiency, and operational reliability are critical. From small to medium SWRO plants to marine, containerized, and specialized systems, including water reuse, aquaculture, and brine concentration, iSave supports a wide range of use cases with a compact, integrated design.

Across these applications, iSave enables simplified system layout and consistently efficient energy recovery, making it a strong fit wherever performance and footprint must go hand in hand.

High pressure RO with iSave

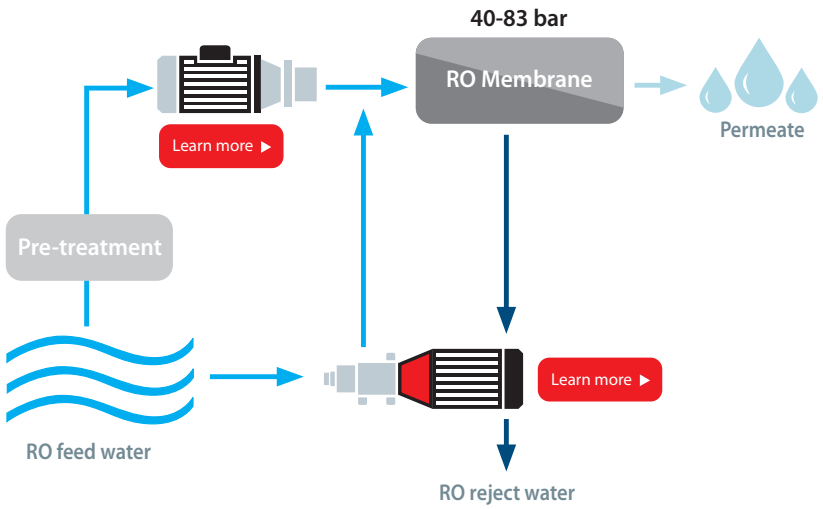

Link to preferred PID

Case Story

iSave 40:

Compact, energy-efficient SWRO for multi-island Maldives resort

Yonsan Engineering installed Danfoss iSave ERDs and APP pumps in a four-train SWRO plant supplying freshwater to three islands at the CROSSROADS Maldives resort complex. The system delivers energy-efficient, reliable operation with a minimal footprint in a location where energy cost, space, and maintenance logistics are critical constraints.

The challenge

Providing fresh water across multiple islands required a compact, energy-efficient SWRO solution with low maintenance demands. High electricity costs, limited space on resort islands, and the logistical complexity of servicing remote installations made efficiency, reliability, and footprint key design priorities.

The solution

Yonsan designed a 2,000 m^3/day SWRO plant with four 500 m^3/day trains, each built around a Danfoss iSave 40 ERD and an APP 22 high-pressure pump. The integrated, compact design minimized system footprint while delivering high energy efficiency. The multi-train configuration provides operational flexibility and redundancy to supply all three islands from a centralized plant.

The results

The plant delivers stable, energy-efficient operation with low maintenance requirements and reduced operating costs. The compact design minimizes space usage, while the system's reliability supports continuous freshwater supply. With built-in redundancy and capacity flexibility, the installation is well positioned to meet future demand without increasing OPEX.

Read the case story

© 2026 Danfoss

Case Story

iSave 50:
Mobile, energy-efficient SWRO for rapid deployment

Metis Water developed containerized SWRO plants powered by Danfoss iSave ERDs and APP pumps to deliver reliable fresh water in emergency situations. Designed as a plug-and-play solution within a 40 ft container, the system enables high water output, low energy consumption, and dependable operation in remote and infrastructure-limited environments.

The challenge

Producing as much fresh water as possible, as energy-efficiently and reliably as possible, within the constraints of a 40 ft container required an ultra-compact SWRO design. Metis Water needed to maximize output without compromising performance, while ensuring low energy consumption and minimal maintenance in remote locations where service access is limited.

The solution

Metis Water designed a 1,000 m^3/day containerized SWRO plant built around a Danfoss iSave 50 ERD and an APP 46/1780 high-pressure pump, both connected to a VLT® AQUA Drive. The integrated, compact setup maximizes production within a constrained footprint while delivering high energy efficiency, reliable operation, and suitability for remote monitoring and control.

The results

The system delivers stable, energy-efficient operation with a specific energy consumption for the RO loop below 2.2 kWh/m^3. Rapid deployment enables water production within days, while reliable performance and long service intervals reduce maintenance needs. Remote monitoring supports continuous operation in hard-to-reach locations, ensuring dependable fresh water supply when and where it is needed.

Read the case story

Case Story

iSave 70:
Compact, efficient SWRO for the world's largest wellboat

Designing SWRO systems for wellboats used in salmon farming requires a careful balance of capacity, efficiency, and footprint. For the world's largest wellboat, Quantum Water relied on Danfoss iSave 70 ERDs and APP pumps to deliver reliable, compact, and energy-efficient desalination.

The challenge

For the Gåsø Høvding wellboat, Quantum Water needed to design a high-capacity SWRO plant for freshwater treatment used in salmon delousing. The system had to deliver high output within a limited onboard footprint while ensuring energy efficiency, easy maintenance, and reliable operation critical to fish health and aquaculture productivity.

The solution

The SWRO plant was built around four Danfoss iSave 70 ERDs and four APP 65/1000 high-pressure pumps, each paired with VLT AQUA drives for optimized control. This configuration enabled a highly compact system design with high energy efficiency and operational flexibility, ensuring reliable performance in a space-constrained marine environment.

The results

The energy-efficient wellboat solution delivers 5,000 m^3/day of fresh water with low maintenance requirements. The compact design minimizes footprint without compromising capacity, while ensuring reliable 24/7 operation. In addition, oil-free APP pumps eliminate contamination risk, supporting safe and efficient aquaculture operations.

Read the case story

© 2026 Danfoss

MPE 70 energy recovery devices: Active isobaric ERD for medium and large SWRO plants

The MPE 70 is the first active isobaric ERD designed specifically for medium and large SWRO plants. By integrating a low-voltage motor with proven pressure exchanger technology, it brings a new level of control to energy recovery at scale and eliminates the limitations of passive ERDs.

This allows operators to maximize utilization of installed capacity and operate closer to maximum flow without limiting performance. The result is improved reliability, greater flexibility in plant design, and consistently high energy efficiency across larger desalination systems.

See how the MPE 70 works

MPE 70	
Flow (m^3/d)	1200-1680
Flow (gpd)	317K-444K
Pressure (bar)	40-83
Pressure (psi)	580-1200
Material	Super duplex

Visit our product store

Get help in dimensioning MPE 70s for your project

Energy efficient

High-efficiency energy recovery for lower OPEX and emissions

With energy recovery efficiency up to 94 percent, active MPE 70 isobaric ERDs significantly reduce overall system energy consumption. High and consistent efficiency across the operating range helps operators maximize energy savings while maintaining stable operation and reliable system performance in large SWRO plants.

Active

Active control for stable, full-capacity operation

Active MPE 70 ERDs use motor-controlled rotor speed to ensure stable operation across varying flow and pressure conditions. This eliminates overspin and enables safe operation at maximum flow with full usable capacity. Active control also reduces internal mixing, while continuous rotation helps limit biofouling, supporting consistent performance and more reliable long-term operation.

Scalability

Scalable capacity for optimized large SWRO systems

The MPE 70 is designed for medium and large plants, supporting parallel installation of multiple units to match required capacity. Easy installation in parallel-coupled trains simplifies system design and enables flexible plant configurations. High utilization of installed capacity reduces the need for excess ERDs and can lower the number of units required per train.

© 2026 Danfoss

MPE 70: Built for high-capacity SWRO applications

The MPE 70 is designed for medium and large SWRO plants, particularly in multi-train desalination systems where high capacity and coordinated operation across multiple units are required.

High pressure RO with MPE 70

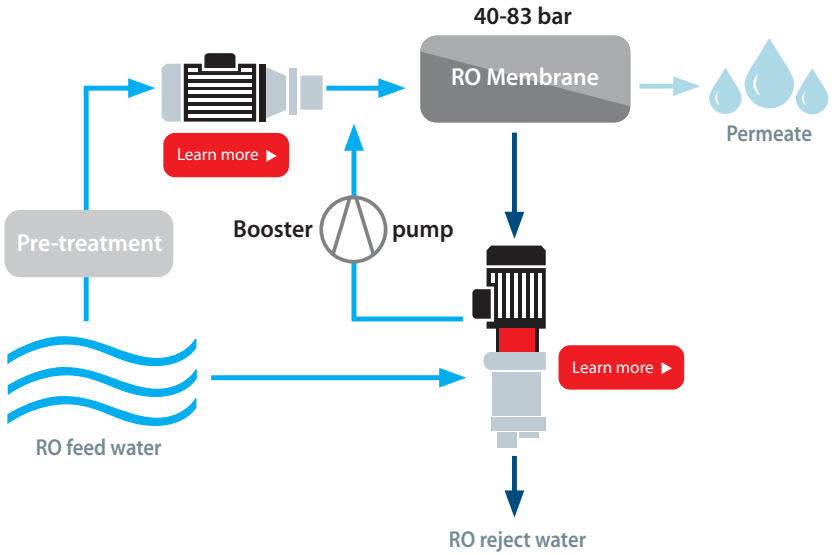

Link to preferred PID

Case Study

High-capacity energy recovery in a multi-ERD 7,500 m³/day system.

ACCIONA installed Danfoss MPE 70 ERDs in one of two treatment lines at its 15,000 m³/day Arucas-Moya desalination plant in Gran Canaria. The 7,500 m³/day line using Danfoss' active ERDs enabled stable, high-capacity operation, reduced mixing, and precise flow balancing across parallel units.

The challenge

Recovering energy efficiently across parallel ERDs is critical in high-capacity SWRO systems. Operators must minimize mixing losses, avoid overspin, and balance flow across units while maintaining stable operation and consistent water quality in a complex, multi-unit setup.

The solution

ACCIONA installed seven Danfoss MPE 70 active isobaric ERDs in one of the plant's two 7,500 m³/day treatment lines. By controlling rotor speed, the system enables precise flow balancing across units and eliminates overspin risk. Operators can monitor and adjust each ERD individually, while controlled overflushing reduces mixing and supports efficient operation.

The results

The installation demonstrates stable operation with reduced mixing, measured at approximately 1.9%. Active control avoids overspin and supports balanced operation across units. Individual monitoring enables better process visibility and early detection of anomalies, supporting reliable and optimized performance in continuous desalination operation.

© 2026 Danfoss

Gen-Save®:
Energy recovery for water reuse

Zero mixing ERD for high-TDS RO up-concentration processes

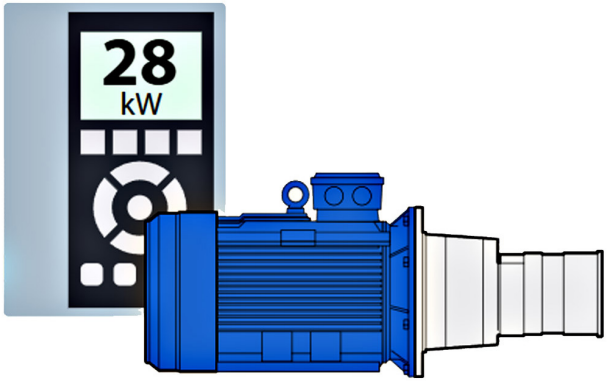

Gen-Save extends energy recovery to industrial high-TDS RO up-concentration applications where mixing, fouling, suspended solids, or process variability can limit the suitability of conventional energy recovery technologies. Common in the textile, chemical, and pharmaceutical industries, these demanding processes often require strict separation between feed and reject streams while maintaining stable performance under challenging operating conditions.

By combining Danfoss axial piston motors and variable frequency drives, Gen-Save recovers up to 80% of pressure energy that would otherwise be lost through control valves while maintaining complete hydraulic isolation. This reduces overall energy consumption and operating costs while enabling precise pressure control, simplified system design, and reliable operation in demanding industrial applications.

Gen-Save ERDs

	APM 0.8	APM 1.0	APM 1.2	APP 1.8	APP 2.0	APP 2.5	APP 2.9	APM S 9.7	APM S 22	APM S 26	APM S 32	APM S 40
Flow m³/d - one ERD	4.1-22.1	5.1-26.9	6.4-32.9	9.4-48.7	10.1-52.3	12.6-64.6	15.4-67.9	91-233	258-528	365-624	448-768	448-960
Flow gpd - one ERD	1083-5838	1347-7080	1690-8691	2483-12865	2668-13816	3328-17065	4068-17937	24040-61552	68156-139483	96422-164843	118349-202884	118349-253605
Pressure (bar)	10-83	10-83	10-83	10-83	10-83	10-83	10-83	30-124	30-83	30-124	30-83	30-83
Pressure (psi)	145-1200	145-1200	145-1200	145-1200	145-1200	145-1200	145-1200	435-1800	435-1200	435-1800	435-1200	435-1200
Material	Duplex	Duplex	Duplex	Duplex	Duplex	Duplex	Duplex	Super duplex	Super duplex	Super duplex	Super duplex	Super duplex

© 2026 Danfoss

Recovery. Isolation. Control. Integration.

Recovery

Recover energy where conventional ERDs are unsuitable

Gen-Save enables energy recovery in high-TDS RO up-concentration systems where conventional ERDs may be challenged by mixing concerns, suspended solids, fouling risks, or variable process conditions. By recovering up to 80% of pressure energy from high-pressure reject streams, it captures energy otherwise lost through throttling valves, reducing overall energy consumption in demanding industrial processes.

Isolation

Protect process integrity with zero mixing

Gen-Save maintains complete hydraulic isolation between feed and concentrate streams, eliminating cross-contamination and cumulative mixing effects. This helps preserve recovered water quality, maintain concentrate composition, support membrane performance, and ensure stable operation in demanding industrial processes.

Control

Control pressure without valves or complexity

Gen-Save combines energy recovery and pressure control in a single solution, eliminating the need for dedicated high-pressure control valves and associated components. This reduces system design complexity and maintenance requirements – and enables precise control across varying flow and pressure conditions.

Integrated

One integrated system, engineered by Danfoss

Gen-Save integrates Danfoss axial piston motors and variable frequency drives into one engineered and tested system. This simplifies installation and commissioning, ensures reliable interaction between components, and provides a ready-to-deploy solution with single-source accountability and consistent long-term performance.

Check out the Gen-Save

Gen-Save
Energy-efficient ZLD for textile dyeing wastewater

Hydrotech developed a zero liquid discharge (ZLD) solution for textile dyeing effluent using Danfoss APP pumps and Gen-Save energy recovery devices to maximize water recovery while minimizing energy consumption. Designed for a reliable operation with challenging feed streams, the system delivers stable long-term performance while helping reduce operating costs and environmental impact.

The challenge

Textile dyeing wastewater presents a complex treatment challenge due to high contaminant loads and the need for very high water recovery. Hydrotech needed a solution that could reliably achieve ZLD targets while maintaining stable performance over time and keeping energy and operating costs under control.

The solution

The treatment system combines multiple pretreatment stages with a high-recovery membrane process incorporating Danfoss APP high-pressure pumps and Gen-Save energy recovery technology. The integrated design was developed to maximize recovery, reduce energy consumption, and support reliable long-term operation in a demanding industrial environment.

The results

The ZLD system achieves water recovery above 94.5% while recovering up to 80% of otherwise wasted hydraulic energy. High-pressure pump energy consumption was reduced by approximately 39%, contributing to lower specific energy consumption, reduced CO_2 emissions, and a lower total cost of ownership.

© 2026 Danfoss

Choosing the right energy recovery technology for high-TDS RO up-concentration

High-TDS RO up-concentration processes often involve suspended solids, organics, solvents, variable feed conditions, and strict requirements for stream separation. Common in Wastewater Treatment Plant (WWTP) in the textile, chemical, and pharmaceutical industries, these demanding applications require more than energy recovery alone. The table below compares Gen-Save with alternative energy recovery approaches across key selection criteria.

	Gen-Save ERD	Isobaric ERD	Turbocharger	Control Valve / Throttle Valve	Impact on WWTP in Textile, Chemical & Pharma industries
Energy recovery principle	Mechanical piston-based energy recovery	Fluid-to-fluid pressure exchange	Hydraulic turbine-based energy recovery	No energy recovery	Defines how pressure energy is recovered, transferred or dissipated in the system
Mixing between streams	Zero mixing: complete hydraulic separation between streams	Inherent micro-mixing with cumulative effects	Minimal mixing possible with cumulative effects	Not applicable	Critical where feed contamination affects product quality and membrane stability
Suitability for challenging streams	High tolerance to suspended solids, organics, solvents and variable feed conditions	Sensitive to fouling & scaling: typically requires effective pretreatment and relatively clean streams	Moderate tolerance to fouling and solids	Subject to wear in demanding service: valve erosion and instability common	Important for, chemical and pharma wastewater with variable composition
Pressure control capability	Integrated pressure control functionality: no control valve required	Requires external control valve	Requires external control valve	Primary pressure reduction device	Stable pressure supports membrane performance, recovery and system reliability
Pressure energy recovery	Up to 80%	Up to 96%	Up to 70%	0%	Directly affects specific energy consumption and operating cost
Maintenance requirement	Low	Maintenance requirements dependent on feed quality and operating conditions	Moderate	Frequent wear and replacement	Lower maintenance helps reduce downtime and OPEX

© 2026 Danfoss. No part of this content may be copied, reproduced, or distributed without prior written permission.

Any information, including, but not limited to information on selection of product, its application or use, product design, weight, dimensions, capacity or any other technical data in product manuals, catalogues descriptions, advertisements, etc. and whether made available in writing, orally, electronically, online or via download, shall be considered informative, and is only binding if and to the extent, explicit reference is made in a quotation or order confirmation. Danfoss cannot accept any responsibility for possible errors in catalogues, brochures, videos and other material. Danfoss reserves the right to alter its products without notice. This also applies to products ordered but not delivered provided that such alterations can be made without changes to form, fit or function of the product. All trademarks in this material are property of Danfoss A/S or Danfoss group companies. Danfoss and the Danfoss logo are trademarks of Danfoss A/S. All rights reserved.

AD566250585951en-000102

© Danfoss 2026